\\tet-file1\Users\tara.chong_TETR\Documents\12498-A-UC_tara.chong.rvt



UNIVERSITY CENTER (INCREMENT 2)

COLLEGE OF THE SEQUOIAS VISALIA CAMPUS

SEQUOIAS COMMUNITY COLLEGE DISTRICT

DSA APPL. NO.: 02-122821

DSA FILE NO.: 54-C2

STATEMENT OF GENERAL CONFORMANCE

FOR ARCHITECTS/ENGINEERS WHO UTILIZE PLANS, INCLUDING BUT NOT LIMITED TO SHOP DRAWINGS, PREPARED BY OTHER LICENSED DESIGN PROFESSIONALS AND/OR CONSULTANTS.

APPLICATION NO.: 02-122821 FILE NO.: 54-C2

THE DRAWINGS OR SHEETS LISTED ON THE COVER OR INDEX SHEET

HAVE BEEN PREPARED BY OTHER DESIGN PROFESSIONALS OR CONSULTANTS WHO ARE LICENSED AND/OR AUTHORIZED TO PREPARE SUCH DRAWINGS IN THIS STATE. IT HAS BEEN EXAMINED BY ME FOR:

1. DESIGN INTENT AND APPEARS TO MEET THE APPROPRIATE REQUIREMENTS OF TITLE 24, CALIFORNIA CODE OF REGULATIONS AND THE PROJECT SPECIFICATIONS PREPARED BY ME, AND

2. COORDINATION WITH MY PLANS AND SPECIFICATIONS AND IS ACCEPTABLE FOR INCORPORATION INTO THE CONSTRUCTION OF THIS PROJECT.

THE STATEMENT OF GENERAL CONFORMANCE "SHALL NOT BE CONSTRUED AS RELIEVING ME OF MY RIGHTS, DUTIES, AND RESPONSIBILITIES UNDER SECTIONS 17302 AND 81138 OF THE EDUCATION CODE AND SECTIONS 4-336, 4-341, AND 4-344" OF TITLE 24, PART I.

I CERTIFY THAT:

☒ ALL DRAWINGS OR SHEETS LISTED ON THE COVER OR INDEX
☐ THIS DRAWING OR PAGE

IS/ARE IN GENERAL CONFORMANCE AND HAVE BEEN COORDINATED WITH THE PROJECT PLANS AND SPECIFICATIONS

02-07-2025

ARCHITECT'S SIGNATURE
JONATHAN COULTER
ARCHITECT
TETER, INC.

DATE

C-31933 — LICENSE NUMBER

03-31-2027 — EXPIRATION DATE

ARCHITECT'S STATEMENT

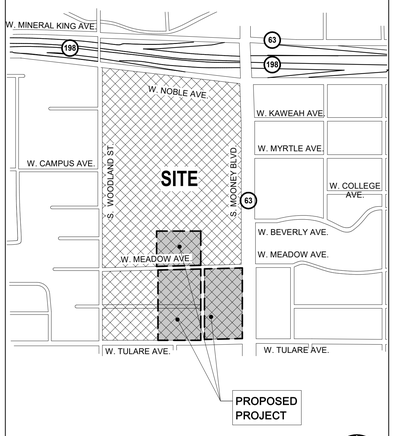

VICINITY MAP N.T.S.

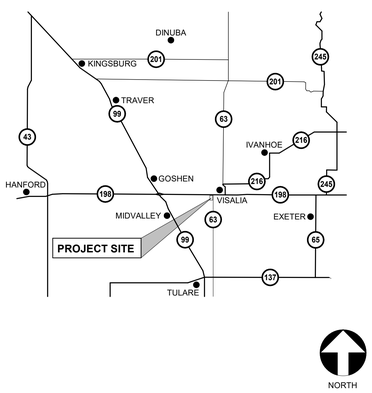

AREA MAP N.T.S.

GOVERNING CODES

2025 CALIFORNIA ADMINISTRATIVE CODE (CAC), C.C.R. TITLE 24, PART 1
2022 CALIFORNIA BUILDING CODE (CBC), C.C.R. TITLE 24, PART 2
2022 CALIFORNIA ELECTRICAL CODE (CEC), C.C.R. TITLE 24, PART 3
2022 CALIFORNIA MECHANICAL CODE (CMC), C.C.R. TITLE 24, PART 4
2022 CALIFORNIA PLUMBING CODE (CPC), C.C.R. TITLE 24, PART 5
2022 CALIFORNIA FIRE CODE (CFC), C.C.R. TITLE 24, PART 9
2022 CALIFORNIA REFERENCED STANDARDS CODE, C.C.R. TITLE 24, PART 12
2022 CALIFORNIA ENERGY CODE (CAC), C.C.R. TITLE 24, PART 6
2022 CALIFORNIA GREEN BUILDING STANDARDS CODE (CALGREEN), C.C.R. TITLE 24, PART 11
C.C.R., TITLE 19 PUBLIC SAFETY
NFPA 13-22 STANDARD FOR THE INSTALLATION OF SPRINKLER SYSTEMS (AS AMENDED)
NFPA 24-22 INSTALLATION OF PRIVATE FIRE SERVICE MAINS AND THEIR APPURTENANCES (AS AMENDED)
NFPA 25-13CA (CALIFORNIA NFPA 25 EDITION) INSPECTION, TESTING, AND MAINTENANCE OF WATER-BASED FIRE PROTECTION SYSTEMS
NFPA 72-22 NATIONAL FIRE ALARM AND SIGNALING CODE (AS AMENDED)
UL 38-99 MANUALLY ACTUATED SIGNALING BOXES (AS AMENDED)
UL 268-16 SMOKE DETECTORS FOR FIRE ALARM SYSTEMS
UL 268A-09 SMOKE DETECTORS FOR DUCT APPLICATION (AS AMENDED)
UL 464-03 AUDIBLE SIGNAL APPLIANCES (AS AMENDED)
UL 521-99 HEAT DETECTORS FOR FIRE PROTECTIVE SIGNALING SYSTEMS (AS AMENDED)
UL 1424 CABLES FOR POWER-LIMITED FIRE-ALARM CIRCUITS (2020 EDITION)
UL 1971 SIGNALING DEVICES FOR THE HEARING IMPAIRED (2024 EDITION)
AMERICANS WITH DISABILITIES ACT

GOVERNING CODES N.T.S.

GENERAL

PROJECT ADDRESS: COLLEGE OF THE SEQUOIAS
915 S. MOONEY BLVD.
VISALIA, CA 93277

PROJECT DESCRIPTION

THE PROJECT CONSISTS OF AN EXISTING +/- 4.3 ACRE SITE WITH DEMOLITION OF EXISTING STRUCTURES, INFRASTRUCTURE UPGRADES, OFF-SITE PUBLIC IMPROVEMENTS AND ON-SITE IMPROVEMENTS INCLUDING THE CONSTRUCTION OF A NEW +/-49,500 SF, 2-STORY, STEEL FRAMED UNIVERSITY CENTER (UC) BUILDING FOR EDUCATIONAL USE, A PHOTOVOLTAIC CARPORT STRUCTURE, AS WELL AS HARDSCAPE AND LANDSCAPE IMPROVEMENTS. THE OVERALL PROJECT IS DIVIDED INTO TWO INCREMENTS AS NOTED BELOW:

INCREMENT 1 - DEMOLITION OF EXISTING STRUCTURES, INFRASTRUCTURE UPGRADES, OFF-SITE PUBLIC IMPROVEMENTS AND ON-SITE HARDSCAPE AND LANDSCAPE IMPROVEMENTS.

INCREMENT 2 - DEMOLITION OF AN EXISTING STRUCTURE, CONSTRUCTION OF THE NEW UNIVERSITY CENTER (UC) BUILDING, OFF-SITE PUBLIC IMPROVEMENTS, A PHOTOVOLTAIC CARPORT STRUCTURE AND ON-SITE HARDSCAPE AND LANDSCAPE IMPROVEMENTS.

- THE PROJECT WILL BE LOCALLY FUNDED UNDER MEASURE 'C' BOND FUNDS APPROVED IN 2022

	CODE EDITION	OCCUPANCY CLASSIFICATION	CONSTRUCTION TYPE
UNIVERSITY CENTER (UC) BUILDING	2022	B, A-3, S-1	II-B (FULLY SPRINKLERED)

DEFERRED APPROVALS

INSTALLATION OF DEFERRED APPROVAL ITEMS SHALL NOT BE STARTED UNTIL CONTRACTOR'S DRAWINGS, SPECIFICATIONS, AND ENGINEERING CALCULATIONS FOR THE ACTUAL SYSTEMS TO BE INSTALLED HAVE BEEN ACCEPTED AND SIGNED BY THE ARCHITECT OR STRUCTURAL ENGINEER AND APPROVED BY THE DIVISION OF THE STATE ARCHITECT.

1. WINDOW WALL SYSTEMS (PER DSA IR 24-2)
2. STOREFRONT SYSTEMS (PER DSA IR 24-2)
3. SKYLIGHTS
4. ELEVATOR GUIDE RAILS

OWNER
COLLEGE OF THE SEQUOIAS COMMUNITY COLLEGE DISTRICT
915 S. MOONEY BLVD.
VISALIA, CA, 93277
(559) 730-3908
CONTACT: BYRON WOODS
EMAIL: byronw@cos.edu

PROJECT ARCHITECT
TETER, INC.
10000 STOCKDALE HIGHWAY, #350
BAKERSFIELD, CA, 93311
(661) 843-8400
CONTACT: JON COULTER
E-MAIL: jon.coulter@teterae.com

CIVIL ENGINEER
BLAIR, CHURCH & FLYNN
451 CLOVIS AVE., SUITE 200
CLOVIS, CA, 93612
(559) 326-1400
CONTACT: LANE BADER
EMAIL: lbader@bcf-engr.com

LANDSCAPE ARCHITECT
DAVID BIGLER ASSOCIATES
516 W. SHAW AVE., SUITE 101
FRESNO, CA, 93711
(559) 276-9495
CONTACT: DAVE BIGLER
EMAIL: dave.bigler@aol.com

STRUCTURAL ENGINEER
TETER, INC.
7535 N. PALM AVE., SUITE 201
FRESNO, CA 93711
(559) 437-0887
CONTACT: ERIC BAILEY
E-MAIL: eric.bailey@teterae.com

MECHANICAL/PLUMBING ENGINEER
TETER, INC.
7535 N. PALM AVE., SUITE 201
FRESNO, CA 93711
(559) 437-0887
CONTACT: STEVEN JONES
E-MAIL: steven.jones@teterae.com

ELECTRICAL ENGINEER
TETER, INC.
7535 N. PALM AVE., SUITE 201
FRESNO, CA 93711
(559) 437-0887
CONTACT: BRYAN GLASS
E-MAIL: bryan.glass@teterae.com

FIRE SPRINKLER ENGINEER
CORDINER CONSULTING LLC
PO BOX 319
FLORA, MS 39071
(732) 547-4228
CONTACT: WAYNE CORDINER
E-MAIL: wcordiner@cordinerco.com

PROJECT DIRECTORY

IDENTIFICATION STAMP
DIV. OF THE STATE ARCHITECT
APP: 02-122821 INC: 2
REVIEWED FOR
SS ☑ FLS ☑ ACS ☑
DATE: 11/20/2025

Teter, Inc. expressly reserves its common law copyright and other property rights in these plans. This document, the ideas and designs incorporated herein, as an instrument of professional service, is not to be used in whole or part, for any other project without prior written authorization.

MARK	DATE	DESCRIPTION
A.	11/13/2025	DSA BACKCHECK

LICENSED ARCHITECT JONATHAN COULTER No. C-31933 STATE OF CALIFORNIA

TETER, INC.
FRESNO HEADQUARTERS
VISALIA | BAKERSFIELD | MODESTO | SAN LUIS OBISPO
ARCHITECTS ENGINEERS CONNECTED

VISALIA CAMPUS UNIVERSITY CENTER
COLLEGE OF THE SEQUOIAS - INCREMENT 2
915 S. MOONEY BLVD
VISALIA, CALIFORNIA

DRAWING TITLE
COVER

PROJECT NO.
22-12498

DRAWING
G000.2

PLOT DATE: 11/10/2025 8:44:02 AM

\\tet-file1\Users\tara.chong_TETR\Documents\12498-A-UC_tara.chong.rvt

GENERAL NOTES

1. A COPY TITLE 24 C.C.R. PARTS 1 AND 2 SHALL BE KEPT ON THE JOB SITE AT ALL TIMES.
2. CHANGES TO THE STRUCTURAL, ACCESSIBILITY OR FIRE AND LIFE-SAFETY PORTIONS OF THE APPROVED PLANS AND SPECIFICATIONS AFTER THE WORK HAS BEEN LET SHALL BE MADE BY A CONSTRUCTION CHANGE DOCUMENT (CCD) AS REQUIRED IN SECTION 4-338, PART I, CAC, AND SHALL BE SUBMITTED TO, AND APPROVED BY DSA PRIOR TO COMMENCEMENT OF THE WORK. CONSTRUCTION CHANGE DOCUMENTS SHALL BE PREPARED AND SUBMITTED TO DSA IN COMPLIANCE WITH DSA INTERPRETATION OF REGULATION IA-6.
3. ALL TESTS TO CONFORM TO THE REQUIREMENTS OF TITLE 24 SECTION 4-335, PART 1, AND APPROVED T & I SHEET.
4. TESTS OF MATERIALS AND TESTING LABORATORY SHALL BE IN ACCORDANCE WITH TITLE 24 SECTION 4-335, PART I, AND THE DISTRICT SHALL EMPLOY AND PAY THE LABORATORY. COSTS OF RETEST MAY BE BACK CHARGED TO THE CONTRACTOR.
5. DSA SHALL BE NOTIFIED AT THE START OF CONSTRUCTION AND PRIOR TO THE PLACEMENT OF THE CONCRETE PER TITLE 24 SECTION 4-331, PART I.
6. A CLASS 1 INSPECTOR REQUIRED FOR THIS PROJECT SHALL BE EMPLOYED BY OWNER AND APPROVED BY ARCHITECT, STRUCTURAL ENGINEER, AND DSA. INSPECTOR SHALL BE IN ACCORDANCE WITH SECTION 4-333(c). THE DUTY OF THE INSPECTOR SHALL BE IN ACCORDANCE WITH TITLE 24 SECTION 4-342, PART I.
7. SUPERVISION OF CONSTRUCTION BY DSA SHALL BE IN ACCORDANCE WITH TITLE 24 SECTION 4-334, PART 1.
8. CONTRACTOR, INSPECTOR, ARCHITECT, AND ENGINEERS SHALL SUBMIT VERIFIED REPORTS (FORM SSS-6) IN ACCORDANCE WITH TITLE 24 SECTION 4-336, PART I.
9. THE ARCHITECT AND THE STRUCTURAL ENGINEER SHALL PERFORM THEIR DUTIES IN ACCORDANCE WITH TITLE 24 SECTION 4-333(a) AND 4-341, PART I.
10. THE CONTRACTOR SHALL PERFORM HIS DUTIES IN ACCORDANCE WITH TITLE 24 SECTION 4-343, PART I.
11. THE INTENT OF THE DRAWINGS AND SPECIFICATIONS IS TO CONSTRUCT THE SCHOOL BUILDING IN ACCORDANCE WITH TITLE 24 C.C.R. SHOULD ANY CONDITIONS DEVELOP NOT COVERED BY THE CONTRACT DOCUMENTS WHEREIN THE FINISHED WORK WILL NOT COMPLY WITH SAID TITLE 24, C.C.R., A CHANGE ORDER DETAILING AND SPECIFYING THE REQUIRED WORK SHALL BE SUBMITTED TO AND APPROVED BY DSA BEFORE PROCEEDING WITH THE WORK.
12. SUBSTITUTIONS AND REQUESTS FOR INFORMATION AFFECTING STRUCTURAL SAFETY, FIRE AND LIFE SAFETY OR ACCESS COMPLIANCE SHALL BE APPROVED BY DSA PRIOR TO FABRICATION OR USE.
13. ADDENDA MUST BE SIGNED BY ARCHITECT AND APPROVED BY DSA.
14. NO CHANGES OR REVISIONS SHALL BE MADE FOLLOWING WRITTEN APPROVAL WHICH AFFECTS ACCESS COMPLIANCE ITEMS UNLESS SUCH CHANGES OR REVISIONS ARE SUBMITTED TO THE DSA FOR APPROVAL.
15. SUBSTITUTIONS AFFECTING DSA REGULATED ITEMS SHALL BE SUBMITTED AS A CONSTRUCTION CHANGE DOCUMENT OR ADDENDA, AND SHALL BE APPROVED BY DSA PRIOR TO FABRICATION AND INSTALLATION.
16. CONSTRUCTION CHANGE DOCUMENTS MUST BE SIGNED BY THE FOLLOWING:
    - ARCHITECT OR ENGINEER OF RECORD
    - STRUCTURAL ENGINEER (WHEN APPLICABLE)
    - DELEGATED PROFESSIONAL ENGINEER
17. MATERIALS AND THEIR INSTALLATION SHALL COMPLY WITH APPLICABLE CODES, STANDARDS AND MANUFACTURER'S RECOMMENDATIONS.
18. ALL CONSTRUCTION AND DEMOLITION SHALL BE IN ACCORDANCE WITH CBC CHAPTER 33, CFC CHAPTER 33, AND THE WRITTEN SITE SAFETY PLAN.
19. GRADING PLANS, DRAINAGE IMPROVEMENTS, ROAD AND ACCESS REQUIREMENTS AND ENVIRONMENTAL/HEALTH CONSIDERATIONS SHALL COMPLY WITH ALL LOCAL ORDINANCES.
20. DSA IS NOT SUBJECT TO ARBITRATION.

PLOT DATE: 11/10/2025 8:44:28 AM

GENERAL NOTES

SHEET INDEX

INCREMENT 1

GENERAL		
	G000.1	COVER AND SHEET INDEX (INC. 1)
	G100.1	LOCAL FIRE AUTHORITY SITE PLAN (INC. 1)
2 TOTAL		
CIVIL		
	C100.1	TOPOGRAPHIC SURVEY LEGEND AND NOTES
	C101.1	PARTIAL TOPOGRAPHICAL SURVEY
	C102.1	PARTIAL TOPOGRAPHICAL SURVEY
	C201.1	PARTIAL DEMOLITION PLAN
	C202.1	PARTIAL DEMOLITION PLAN
	C301.1	PARTIAL SITE PLAN
	C302.1	PARTIAL SITE PLAN
	C401.1	PARTIAL HORIZONTAL CONTROL PLAN
	C402.1	PARTIAL HORIZONTAL CONTROL PLAN
	C403.1	PARTIAL HORIZONTAL CONTROL PLAN TABLE
	C404.1	HORIZONTAL CONTROL PLAN - NORTH ROUNDABOUT
	C501.1	PARTIAL GRADING AND DRAINAGE PLAN
	C502.1	PARTIAL GRADING AND DRAINAGE PLAN
	C503.1	GRADING AND DRAINAGE ENLARGEMENT PLAN
	C601.1	UTILITY PLAN
	C701.1	SIGNAGE AND STRIPING PLAN
	X101.1	DETAILS
	X102.1	DETAILS
18 TOTAL		
LANDSCAPE		
	L100.1	LANDSCAPE DEMOLITION PLAN
	L101.1	LANDSCAPE DEMOLITION PLAN
	L102.1	LANDSCAPE IRRIGATION DEMOLITION PLAN
	L103.1	LANDSCAPE IRRIGATION DEMOLITION PLAN
	L200.1	LANDSCAPE PLANTING PLAN
	L201.1	LANDSCAPE PLANTING PLAN
	L202.1	LANDSCAPE IRRIGATION PLAN
	L203.1	LANDSCAPE IRRIGATION PLAN
	L204.1	LANDSCAPE IRRIGATION LEGEND
	L300.1	LANDSCAPE & IRRIGATION DETAILS
	L301.1	LANDSCAPE & IRRIGATION DETAILS
	L302.1	LANDSCAPE & IRRIGATION DETAILS
	L303.1	LANDSCAPE & IRRIGATION DETAILS
13 TOTAL		
ARCHITECTURAL		
	A000.1	LEGENDS AND ABBREVIATIONS (INC. 1)
	A100.1	DEMOLITION SITE PLAN (INC. 1)
	A101.1	ENLARGED DEMOLITION SITE PLAN - NORTH (INC. 1)
	A102.1	ENLARGED DEMOLITION SITE PLAN - SOUTH (INC. 1)
	A110.1	PROPOSED SITE PLAN (INC. 1)
	A111.1	PROPOSED ENLARGED SITE PLAN - NORTH (INC. 1)
	A112.1	PROPOSED ENLARGED SITE PLAN - SOUTH (INC. 1)
	A113.1	PROPOSED SITE PLAN - NORTH ROUNDABOUT (INC. 1)
	A114.1	GABION WALL AND MONUMENT SIGN (INC. 1)
	A115.1	ENLARGED SITE - CONCRETE JOINTS (INC. 1)
	A116.1	ENLARGED - ELECTRICAL YARD (INC. 1)
	A117.1	SITE DETAILS (INC. 1)
	A118.1	CONCRETE/CMU WALL DETAILS & NOTES (INC. 1)
13 TOTAL		
PLUMBING		
	P001.1	PLUMBING LEGEND AND NOTES
	P101.1	PLUMBING DEMOLITION SITE PLAN - NORTH
	P102.1	PLUMBING DEMOLITION SITE PLAN - SOUTH
	P112.1	PROPOSED PLUMBING SITE PLAN - SOUTH
4 TOTAL		
ELECTRICAL		
	E100.1	ELECTRICAL SITE DEMOLITION PLAN
	E101.1	ELECTRICAL SITE POWER PLAN
	E102.1	ENLARGED ELECTRICAL SITE PLAN
	E103.1	PHOTOMETRICS
	E600.1	ELECTRICAL DETAILS
	E601.1	ELECTRICAL DETAILS
	E602.1	ELECTRICAL DETAILS
	E700.1	SINGLE LINE DIAGRAM
	E800.1	ELECTRICAL SCHEDULES, LEGENDS, AND NOTES
	E801.1	PANEL SCHEDULES
	E900.1	ENERGY COMPLIANCE DOCUMENTS
11 TOTAL		
TOTAL PAGES: 61 SHEETS INC. 1		

INCREMENT 2

GENERAL		
	G000.2	COVER
	G001.2	SHEET INDEX/NOTES/CODES
	G100.2	LOCAL FIRE AUTHORITY SITE PLAN (INCREMENT 2)
	G201.2	BUILDING CODE ANALYSIS
4 TOTAL		
CIVIL		
	C100.2	TOPOGRAPHIC SURVEY LEGEND AND NOTES
	C101.2	TOPOGRAPHIC SURVEY
	C201.2	DEMOLITION PLAN
	C301.2	SITE PLAN
	C401.2	HORIZONTAL CONTROL PLAN
	C402.2	HORIZONTAL CONTROL PLAN TABLE
	C501.2	GRADING AND DRAINAGE PLAN
	C502.2	GRADING AND DRAINAGE ENLARGEMENTS PLAN
	C601.2	UTILITY PLAN
	C701.2	SIGNAGE AND STRIPING PLAN
	X101.2	DETAILS
	X102.2	DETAILS
	X103.2	DETAILS
13 TOTAL		
LANDSCAPE		
	L100.2	LANDSCAPE DEMOLITION PLAN
	L101.2	LANDSCAPE IRRIGATION DEMOLITION PLAN
	L102.2	LANDSCAP E & IRRIGATION DEMOLITION LEGENDS
	L200.2	LANDSCAPE PLANTING PLAN
	L201.2	LANDSCAPE PLANTING LEGEND
	L300.2	LANDSCAPE IRRIGATION PLAN
	L301.2	LANDSCAPE IRRIGATION LEGEND
	L400.2	LANDSCAPE & IRRIGATION DETAILS
	L401.2	LANDSCAPE & IRRIGATION DETAILS
	L402.2	LANDSCAPE & IRRIGATION DETAILS
	L403.2	LANDSCAPE & IRRIGATION DETAILS
	L404.2	LANDSCAPE & IRRIGATION DETAILS & NOTES
12 TOTAL		
ARCHITECTURAL		
	A000.2	LEGENDS AND ABBREVIATIONS (INCREMENT 2)
	A001.2	PARTITION TYPES
	A120.2	PROPOSED SITE PLAN (INC. 2)
	A121.2	DEMOLITION ENLARGED SITE PLAN - SOUTH (INC. 2)
	A122.2	PROPOSED SITE PLAN - SOUTH (INC. 2)
	A123.2	ENLARGED SITE CONCRETE JOINTS - (INC. 2)
	A124.2	ENLARGED PROPOSED SITE PLAN (INC. 2)
	A125.2	PROPOSED SITE PLAN - SOUTH ROUNDABOUT (INC. 2)
	A126.2	ENLARGED SITE PLAN - PARKING LAYOUT (INC. 2)
	A127.2	ENLARGED SITE - EXTERIOR STAIRS (INCREMENT 2)
	A128.2	ENLARGED SITE PLAN - RAMP (INCREMENT 2)
	A129.2	PROPOSED SITE PLAN - SITE WALL 'A' (INC. 2)
	A131.2	SITE ELEVATIONS (INC. 2)
	A132.2	SITE DETAILS (INC. 2)
	A134.2	SITE DETAILS (INCREMENT 2)
	A210.2	FLOOR PLAN - FIRST FLOOR PLAN
	A220.2	FLOOR PLAN - SECOND FLOOR PLAN
	A230.2	ENLARGED FLOOR PLANS - RESTROOMS
	A231.2	ENLARGED FLOOR PLANS - RESTROOMS
	A232.2	ENLARGED FLOOR PLANS - LECTURE
	A233.2	ENLARGED FLOOR PLANS - PROGRAM OFFICES
	A234.2	ENLARGED FLOOR PLAN - LABORATORIES
	A235.2	EQUIPMENT SCHEDULE
	A236.2	HAZARDOUS MATERIALS REPORT
	A237.2	HAZARDOUS MATERIALS REPORT
	A240.2	ENLARGED FLOOR PLANS - STAIRS
	A241.2	ENLARGED FLOOR PLANS - STAIRS
	A242.2	ENLARGED FLOOR PLANS - STAIRS
	A243.2	STAIRS - SECTIONS
	A244.2	ENLARGED FLOOR PLANS - STAIRS
	A300.2	EXTERIOR ELEVATIONS
	A301.2	EXTERIOR ELEVATIONS
	A302.2	ENLARGED EXTERIOR ELEVATIONS
	A303.2	ENLARGED EXTERIOR ELEVATIONS
	A304.2	ENLARGED EXTERIOR ELEVATIONS
	A305.2	ENLARGED EXTERIOR ELEVATIONS
	A306.2	ENLARGED EXTERIOR ELEVATIONS
	A400.2	BUILDING SECTIONS
	A401.2	BUILDING SECTIONS
	A402.2	BUILDING SECTIONS
	A450.2	WALL SECTION
	A451.2	WALL SECTIONS AND PARTIAL WALL ELEVATIONS
	A452.2	WALL SECTIONS AND PARTIAL WALL ELEVATIONS
	A453.2	WALL SECTIONS AND PARTIAL WALL ELEVATIONS
	A454.2	WALL SECTIONS AND PARTIAL WALL ELEVATIONS
	A455.2	WALL SECTIONS AND PARTIAL WALL ELEVATIONS
	A456.2	WALL SECTIONS AND PARTIAL WALL ELEVATIONS
	A457.2	WALL SECTIONS AND PARTIAL WALL ELEVATIONS
	A458.2	WALL SECTION AND ELEVATIONS
	A500.2	ROOF PLAN
	A610.2	REFLECTED CEILING PLAN - FIRST FLOOR
	A620.2	REFLECTED CEILING PLAN - SECOND FLOOR
	A700.2	DOOR SCHEDULE
	A701.2	WINDOW SCHEDULE
	A702.2	WINDOW SCHEDULE
	A703.2	WINDOW SCHEDULE
	A704.2	WINDOW SCHEDULE
	A800.2	TYPICAL ACCESSIBILITY AND SIGNAGE DETAILS
	A801.2	TYPICAL ACCESSIBILITY AND SIGNAGE DETAILS
	A810.2	EXTERIOR OPENING DETAILS
	A811.2	EXTERIOR OPENING DETAILS
	A812.2	EXTERIOR OPENING DETAILS
	A813.2	EXTERIOR OPENING DETAILS
	A814.2	EXTERIOR OPENING DETAILS
	A815.2	EXTERIOR OPENING DETAILS
	A816.2	EXTERIOR OPENING DETAILS
	A817.2	EXTERIOR OPENING DETAILS
	A818.2	INTERIOR OPENING DETAILS
	A819.2	INTERIOR OPENING DETAILS
	A820.2	EXTERIOR WALL DETAILS
	A821.2	EXTERIOR WALL DETAILS
	A822.2	EXTERIOR WALL DETAILS
	A823.2	EXTERIOR WALL DETAILS
	A824.2	EXTERIOR WALL DETAILS
	A825.2	EXTERIOR WALL DETAILS
	A826.2	EXTERIOR WALL DETAILS
	A827.2	EXTERIOR WALL DETAILS
	A828.2	EXTERIOR WALL DETAILS
	A829.2	EXTERIOR WALL DETAILS
	A830.2	INTERIOR WALL DETAILS
	A831.2	INTERIOR WALL DETAILS
	A832.2	INTERIOR WALL DETAILS
	A833.2	INTERIOR WALL DETAILS
	A835.2	ROOF DETAILS
	A836.2	ROOF DETAILS
	A837.2	ROOF DETAILS
	A838.2	ROOF DETAILS
	A840.2	CEILING DETAILS
	A841.2	CEILING DETAILS
	A842.2	CEILING DETAILS
	A843.2	CEILING DETAILS
	A844.2	CEILING DETAILS
	A845.2	CEILING DETAILS
	A846.2	CEILING DETAILS
	A847.2	CEILING DETAILS
	A850.2	VERTICAL SYSTEM DETAILS
	A851.2	VERTICAL SYSTEM DETAILS
	A852.2	VERTICAL SYSTEM DETAILS
	A853.2	VERTICAL SYSTEM DETAILS
	A854.2	VERTICAL SYSTEM DETAILS
	A855.2	VERTICAL SYSTEM DETAILS
	A856.2	VERTICAL SYSTEM DETAILS
	A861.2	INTERIOR DETAILS
	A862.2	INTERIOR DETAILS
	A863.2	INTERIOR DETAILS
	A864.2	INTERIOR DETAILS
	A865.2	INTERIOR DETAILS
	A866.2	ACOUSTIC DETAILS
	A867.2	ACOUSTIC DETAILS

INCREMENT 2

	A868.2	COLUMN FURRING DETAILS
	A869.2	COLUMN FURRING DETAILS
	A870.2	FIRE RATED DETAILS
	A871.2	FIRE RATED DETAILS
	A872.2	FIRE RATED DETAILS
	A873.2	FIRE RATED DETAILS
	A900.2	FINISH SCHEDULE
	A901.2	FLOOR FINISH PLAN - FIRST FLOOR
	A902.2	FLOOR FINISH PLAN - SECOND FLOOR
	A910.2	INTERIOR ELEVATIONS - FIRST FLOOR
	A911.2	INTERIOR ELEVATIONS - FIRST FLOOR
	A912.2	INTERIOR ELEVATIONS - FIRST FLOOR
	A913.2	INTERIOR ELEVATIONS - FIRST FLOOR
	A914.2	INTERIOR ELEVATIONS - FIRST FLOOR
	A915.2	INTERIOR ELEVATIONS - FIRST FLOOR
	A916.2	INTERIOR ELEVATIONS - FIRST FLOOR
	A917.2	INTERIOR ELEVATIONS - FIRST FLOOR
	A918.2	INTERIOR ELEVATIONS - FIRST FLOOR
	A919.2	INTERIOR ELEVATIONS - FIRST FLOOR
	A920.2	INTERIOR ELEVATIONS - SECOND FLOOR
	A921.2	INTERIOR ELEVATIONS - SECOND FLOOR
	A922.2	INTERIOR ELEVATIONS - SECOND FLOOR
	A923.2	INTERIOR ELEVATIONS - SECOND FLOOR
	A924.2	INTERIOR ELEVATIONS - SECOND FLOOR
	A950.2	LAB DETAILS WORKSTATION ELEVATIONS
	A951.2	LAB DETAILS
	A952.2	LAB DETAILS
	A953.2	LAB DETAILS
	A954.2	LAB DETAILS
138 TOTAL		
STRUCTURAL		
	S000.2	GENERAL NOTES
	S001.2	GENERAL NOTES
	S002.2	TYPICAL DETAILS - FOUNDATION
	S003.2	TYPICAL DETAILS - FOUNDATION
	S004.2	TYPICAL DETAILS - METAL STUD
	S005.2	TYPICAL DETAILS - METAL STUD
	S006.2	TYPICAL DETAILS - METAL STUD
	S007.2	TYPICAL DETAILS - METAL DECK
	S008.2	TYPICAL DETAILS - METAL DECK
	S009.2	TYPICAL DETAILS - METAL DECK
	S010.2	TYPICAL DETAILS - STEEL
	S011.2	TYPICAL DETAILS - STEEL
	S012.2	TYPICAL DETAILS - MOMENT FRAME
	S100.2	FOUNDATION PLAN
	S101.2	SLAB EDGE PLAN
	S200.2	2ND FLOOR (LOWER) FRAMING PLAN
	S201.2	2ND FLOOR (LOWER) DIAPHRAGM PLAN
	S202.2	2ND FLOOR (UPPER) FRAMING PLAN
	S203.2	2ND FLOOR (UPPER) DIAPHRAGM PLAN
	S210.2	2ND FLOOR FRAMING PLAN - PARTIAL
	S211.2	2ND FLOOR (LOWER) FRAMING PLAN - PARTIAL
	S300.2	ROOF FRAMING PLAN (LOWER)
	S302.2	ROOF FRAMING PLAN (UPPER)
	S310.2	ROOF FRAMING PLANS - PARTIAL
	S311.2	ROOF FRAMING PLANS - PARTIAL
	S312.2	ROOF FRAMING PLANS - PARTIAL
	S400.2	FRAME LINE ELEVATIONS
	S401.2	FRAME LINE ELEVATIONS
	S402.2	FRAME LINE ELEVATIONS
	S410.2	WALL FRAMING ELEVATIONS
	S420.2	ELEVATOR SECTIONS
	S421.2	ELEVATOR SECTIONS
	S500.2	FOUNDATION DETAILS
	S501.2	FOUNDATION DETAILS
	S502.2	FOUNDATION DETAILS
	S503.2	FOUNDATION DETAILS
	S600.2	FLOOR FRAMING DETAILS
	S601.2	FLOOR FRAMING DETAILS
	S602.2	FLOOR FRAMING DETAILS
	S700.2	ROOF FRAMING DETAILS
	S701.2	ROOF FRAMING DETAILS
	S702.2	ROOF FRAMING DETAILS
	S703.2	SKYLIGHT FRAMING DETAILS
	S800.2	STAIR PLANS
	S801.2	STAIR PLANS
	S802.2	STAIR PLANS
	S803.2	STAIR SECTIONS
	S804.2	STAIR SECTIONS
	S805.2	STAIR SECTIONS
	S806.2	STAIR FRAMING DETAILS
	S807.2	STAIR FRAMING DETAILS
	S808.2	STAIR FRAMING DETAILS
	S809.2	ENLARGED ELEVATOR PLAN & DETAILS
	S810.2	MISCELLANEOUS FRAMING & DETAILS
	S811.2	MISCELLANEOUS FRAMING & DETAILS
	S812.2	MISCELLANEOUS FRAMING & DETAILS
56 TOTAL		
PLUMBING		
	P001.2	PLUMBING SCHEDULES, LEGENDS, AND NOTES
	P002.2	PLUMBING SCHEDULES
	P100.2	PROPOSED PLUMBING SITE PLAN
	P101.2	ENLARGED PLUMBING DEMOLITION SITE PLAN
	P200.2	OVERALL PLUMBING FLOOR PLAN - FIRST FLOOR BEL. GRADE
	P201.2	OVERALL PLUMBING FLOOR PLAN - FIRST FLOOR ABV. CEILING
	P210.2	OVERALL PLUMBING FLOOR PLAN - SECOND FLOOR
	P300.2	ENLARGED PLUMBING FLOOR PLANS - RESTROOMS SEWER & VENT
	P301.2	ENLARGED PLUMBING FLOOR PLANS - RESTROOMS DOMESTIC COLD & HOT WATER
	P302.2	ENLARGED PLUMBING FLOOR PLANS - RESTROOMS SEWER & VENT
	P303.2	ENLARGED PLUMBING FLOOR PLANS - RESTROOMS DOMESTIC COLD & HOT WATER
	P304.2	ENLARGED PLUMBING FLOOR PLAN - LECTURE AREA BEL. GR. SEWER, VENT, DOMESTIC COLD & HOT WATER, AND LAB PIPING
	P305.2	ENLARGED PLUMBING FLOOR PLAN - LECTURE AREA ABV. CLG. SEWER & VENT
	P306.2	ENLARGED PLUMBING FLOOR PLAN - LECTURE AREA ABV. CLG. DOMESTIC COLD & HOT WATER
	P307.2	ENLARGED PLUMBING FLOOR PLAN - LECTURE AREA ABV. CLG. LAB PIPING AND GAS
	P308.2	ENLARGED PLUMBING FLOOR PLAN - LAB AREA ABV. FLR. SEWER & VENT
	P309.2	ENLARGED PLUMBING FLOOR PLAN - LAB AREA ABV. FLR. DOMESTIC COLD & HOT WATER
	P310.2	ENLARGED PLUMBING FLOOR PLAN - LAB AREA ABV. FLR. LAB PIPING
	P500.2	PLUMBING ROOF PLAN
	P800.2	PLUMBING DETAILS
	P801.2	PLUMBING DETAILS
	P802.2	PLUMBING DETAILS
	P900.2	TITLE 24 DOCUMENTATION
23 TOTAL		
MECHANICAL		
	M001.2	MECHANICAL LEGENDS AND NOTES
	M002.2	MECHANICAL SCHEDULES
	M003.2	MECHANICAL SCHEDULES
	M210.2	MECHANICAL FLOOR PLAN - FIRST FLOOR
	M220.2	MECHANICAL FLOOR PLAN - SECOND FLOOR
	M310.2	MECHANICAL FLOOR PLAN - FIRST FLOOR PIPING
	M320.2	MECHANICAL FLOOR PLAN - SECOND FLOOR PIPING
	M400.2	MECHANICAL CONTROLS
	M401.2	MECHANICAL CONTROLS
	M402.2	MECHANICAL CONTROLS
	M403.2	MECHANICAL CONTROLS
	M404.2	MECHANICAL CONTROLS
	M405.2	MECHANICAL CONTROLS
	M410.2	MECHANICAL CONTROLS FLOOR PLAN - FIRST FLOOR
	M420.2	MECHANICAL CONTROLS FLOOR PLAN - SECOND FLOOR
	M500.2	MECHANICAL ROOF PLAN
	M800.2	MECHANICAL DETAILS
	M801.2	MECHANICAL DETAILS
	M802.2	MECHANICAL DETAILS
	M803.2	MECHANICAL DETAILS
	M900.2	TITLE 24 DOCUMENTATION
	M901.2	TITLE 24 DOCUMENTATION
	M902.2	TITLE 24 DOCUMENTATION
	M903.2	TITLE 24 DOCUMENTATION
	M904.2	TITLE 24 DOCUMENTATION

INCREMENT 2

	M905.2	TITLE 24 DOCUMENTATION
	M906.2	TITLE 24 DOCUMENTATION
	M907.2	TITLE 24 DOCUMENTATION
	M908.2	TITLE 24 DOCUMENTATION
	M909.2	TITLE 24 DOCUMENTATION
	M910.2	TITLE 24 DOCUMENTATION
	M911.2	TITLE 24 DOCUMENTATION
	M912.2	TITLE 24 DOCUMENTATION
	M913.2	TITLE 24 DOCUMENTATION
	M914.2	TITLE 24 DOCUMENTATION
	M915.2	TITLE 24 DOCUMENTATION
	M916.2	TITLE 24 DOCUMENTATION
	M917.2	TITLE 24 DOCUMENTATION
	M918.2	TITLE 24 DOCUMENTATION
	M919.2	TITLE 24 DOCUMENTATION
	M920.2	TITLE 24 DOCUMENTATION
41 TOTAL		
ELECTRICAL		
	E100.2	ELECTRICAL SITE PLAN
	E101.2	ELECTRICAL SITE LIGHTING PLAN
	E102.2	ENLARGED SITE ELECTRICAL PLAN - SOLAR ARRAY AND ELECTRIC VEHICLE
	E210.2	POWER PLAN - FIRST FLOOR
	E211.2	HVAC SYSTEMS POWER PLAN - FIRST FLOOR
	E220.2	POWER PLAN - SECOND FLOOR
	E221.2	HVAC SYSTEMS POWER PLAN - SECOND FLOOR
	E230.2	POWER PLAN - ROOF
	E310.2	LIGHTING PLAN - FIRST FLOOR
	E311.2	ENLARGED LIGHTING PLAN - LECTURE ROOM INGRADE, AISLE, AND STEP LIGHT FIXTURES
	E320.2	LIGHTING PLAN - SECOND FLOOR
	E331.2	EMERGENCY LIGHTING PHOTOMETRICS - FIRST FLOOR
	E332.2	EMERGENCY LIGHTING PHOTOMETRICS -SECOND FLOOR
	E410.2	SIGNAL PLAN - FIRST FLOOR
	E411.2	SIGNAL PLAN - FIRST FLOOR DATA ROOM
	E420.2	SIGNAL PLAN - SECOND FLOOR
	E421.2	SIGNAL PLAN - SECOND FLOOR DATA ROOM
	E510.2	FIRE ALARM PLAN - FIRST FLOOR
	E520.2	FIRE ALARM PLAN - SECOND FLOOR
	E600.2	ELECTRICAL DETAILS - SITE
	E601.2	ELECTRICAL DETAILS - BESS
	E602.2	ELECTRICAL DETAILS - BUILDING
	E603.2	ELECTRICAL DETAILS - BUILDING LIGHTING
	E604.2	ELECTRICAL DETAILS - BUILDING SIGNAL
	E605.2	ELECTRICAL DETAILS - LIGHTING CONTROL
	E700.2	SINGLE LINE DIAGRAM
	E701.2	FIBER OPTIC CABLE RISER DIAGRAM
	E702.2	SOLAR PHOTOVOLTAIC SYSTEM
	E710.2	FIRE ALARM RISER DIAGRAM, LEGEND, AND NOTES
	E711.2	FIRE ALARM BATTERY AND VOLTAGE DROP CALCULATIONS
	E800.2	ELECTRICAL SCHEDULES, LEGENDS, AND NOTES
	E801.2	PANEL SCHEDULES
	E802.2	PANEL SCHEDULES
	E803.2	PANEL SCHEDULES
	E804.2	PANEL SCHEDULES
	E805.2	PANEL SCHEDULES
	E900.2	ENERGY COMPLIANCE DOCUMENTS
	E901.2	ENERGY COMPLIANCE DOCUMENTS
	E902.2	ENERGY COMPLIANCE DOCUMENTS
	E903.2	ENERGY COMPLIANCE DOCUMENTS
40 TOTAL		
FIRE		
	FP000.2	GENERAL INFORMATION
	FP100.2	SITE PLAN
	FP210.2	FIRST FLOOR PIPING PLAN WEST
	FP211.2	FIRST FLOOR PIPING PLAN EAST
	FP212.2	FIRST FLOOR PIPING PLAN LECTURE HALL CEILINGS
	FP220.2	SECOND FLOOR PIPING PLAN WEST
	FP221.2	SECOND FLOOR PIPING PLAN EAST
	FP300.2	ELEVATIONS
	FP400.2	SECTIONS
	FP401.2	SECTIONS
	FP402.2	SECTIONS
	FP610.2	FIRST FLOOR EAST REFLECTED CEILING PLAN WEST
	FP611.2	FIRST FLOOR WEST REFLECTED CELING PLAN EAST
	FP620.2	SECOND FLOOR EAST REFLECTED CEILING PLAN WEST
	FP621.2	SECOND FLOOR WEST REFLECTED CEILING PLAN EAST
	FP800.2	DETAILS
16 TOTAL		
PHOTOVOLTAIC STRUCTURE PER PC#04-123080		
	S2.1	4 PANEL OT-STRUCTURE SIMPLE-SPAN SITE SPECIFIC
	S-1	COVER SHEET 1
	S-2	COVER SHEET 2
	S-3	GENERAL NOTES
	S-4	SAMPLE DSA-103 FORMS
	S-5	SECTION PROPERTIES & REBAR DETAILS
	S-11	OT-STRUCTURE FRAMING PLAN & ELEVATIONS
	S-12	OT-STRUCTURE BEAM/COLUMN SCHEDULE
	S-13	OT-STRUCTURE PIER FOUNDATION SCHEDULE
	S-15	OT-STRUCTURE BEAM-TO-COLUMN SCHEDULE
	S-16	PURLIN SCHEDULE
	S-17	TYPICAL PURLIN SCHEDULE
	S-18	TYPICAL SOLAR PANEL DETAILS
	S-19	BEAM BRACING & MISC. DETAILS
	S-20	EQUIPMENT COLUMN CONNECTIONS
	S-21	FOUNDATION MISC. DETAILS
16 TOTAL		
TOTAL PAGES: 359 SHEETS INC. 2		

IDENTIFICATION STAMP
DIV. OF THE STATE ARCHITECT
APP: 02-122821 INC: 2
REVIEWED FOR
SS ☑ FLS ☑ ACS ☑
DATE: 11/20/2025

Teter, Inc. expressly reserves its common law copyright and other property rights in these plans. This document, the ideas and designs incorporated herein, as an instrument of professional service, is not to be used in whole or in part, for any other project without prior written authorization.

MARK	DATE	DESCRIPTION
A.	11/13/2025	DSA BACKCHECK

TETER, INC.
FRESNO HEADQUARTERS
VISALIA | BAKERSFIELD | MODESTO | SAN LUIS OBISPO
ARCHITECTS ENGINEERS CONNECTED

VISALIA CAMPUS UNIVERSITY CENTER
COLLEGE OF THE SEQUOIAS - INCREMENT 2
915 S. MOONEY BLVD
VISALIA, CALIFORNIA

DRAWING TITLE
SHEET INDEX/NOTES/CODES

PROJECT NO.
22-12498

DRAWING
G001.2

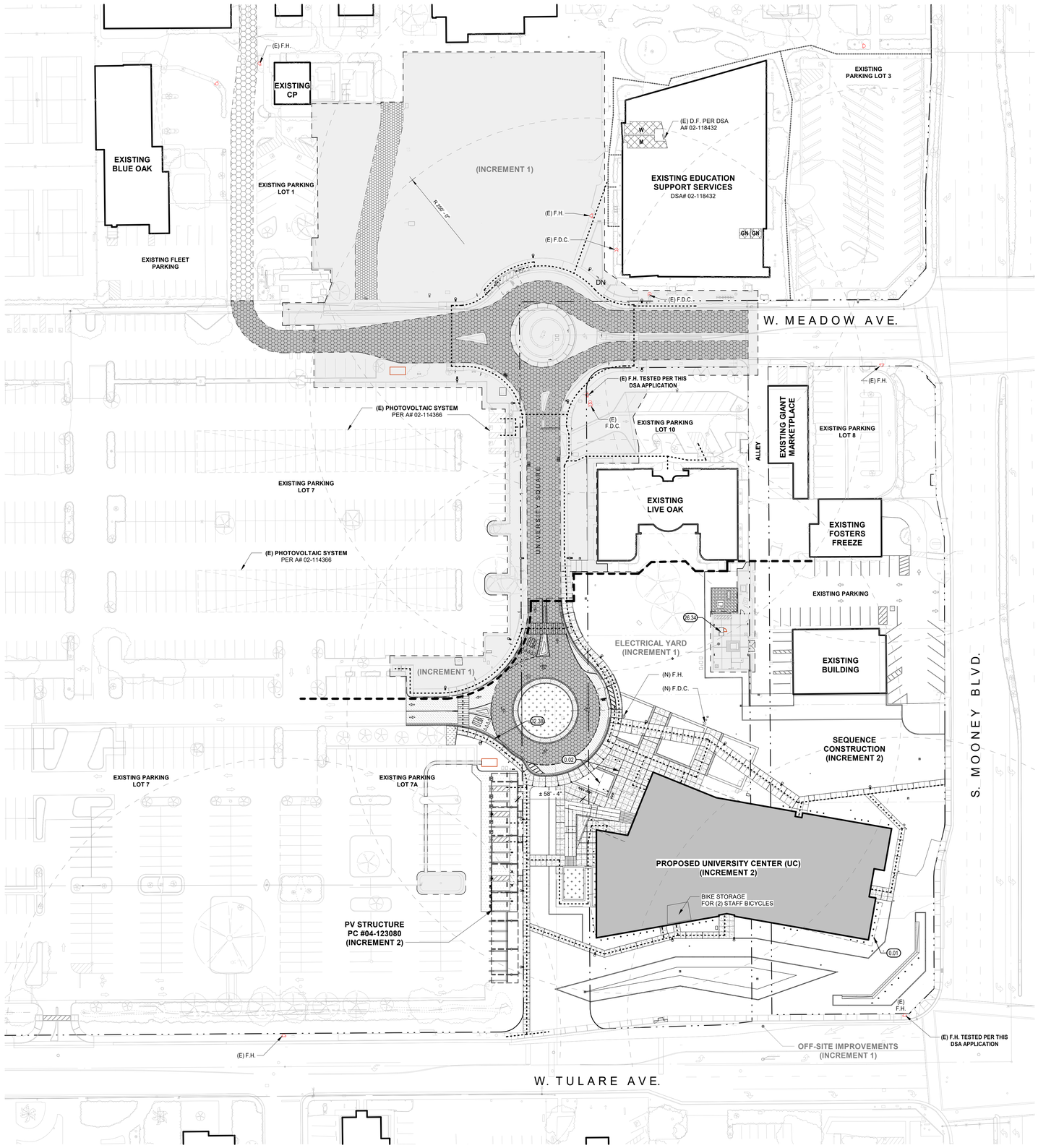

KEYNOTES

0.01	LINE OF FLOOR ABOVE
0.02	LINE OF ROOF ABOVE, (TYP.)
26.34	NEW BATTERY ENERGY STORAGE SYSTEM 'BESS', SEE ELECTRICAL
32.38	FIRE LANE MARKING, RED CURB FACE AND TOP, "FIRE LANE" MARKING AS REQUIRED BY LOCAL FIRE AUTHORITY.

California Water Service Company
Fire Flow Test
10/13/2025

Test Date: 10/13/2025 Time: 6:45
District VISALIA Zone: Plat: 31-32
Address: S Mooney BLVD
Cross Street: W Tulare AVE
Requested By: Jon Coulter
Conducted By: Gilbert
Purpose Of Test: Determine Available Flow
Witnessed By: Caleaser: Rene
Others:

Outlet No.	Outlet Size	PITOT	Observed	Static Pressure	Residual Pressure	Flow Observed	Flow Avail. @20
Location 1 Hydrant No.: Vle-168			Address: 2015 W Tulare Ave.				
1	2.50	14	628	77	67	2802	7173
2	4.50	16	2175				
3							
4							
Location 2 Hydrant No.: -			Address:				
1							
2							
3							
4							
Location 3 Hydrant No.: -			Address:				
1							
2							
3							
4							
			Total Flow Observed Available @20:			2802	7173

Remarks:

Static/Residual Location: Vle-298 W Tulare Ave. and S Mooney Blvd.

Note:
Regardless of the results of this test, California Water Service Company assumes no liability beyond that stated in the following excerpt from the P.U.C. Tariff Schedule: "The utility (California Water Service Company) will supply only such water at such pressure as may be available from time to time as a result of its normal operation of the system."

LEGEND

- EXISTING BUILDING NOT INCLUDED IN SCOPE OF WORK
- PROPOSED NEW UNIVERSITY CENTER BUILDING, (UNDER INCREMENT 2)
- SITE IMPROVEMENTS (UNDER INCREMENT 1)
- CONCRETE PAVING, SEE CIVIL **A/X101.2**
- HEAVY DUTY CONCRETE PAVING, SEE CIVIL **B/X101.2**
- HEAVY DUTY ASPHALT PAVING, SEE CIVIL **C/X101.2**
- W M GN — EXISTING ACCESSIBLE RESTROOMS WOMEN/MEN/ GENDER NEUTRAL PER DSA A# 02-118432
- (E) F.H. — EXISTING FIRE HYDRANT
- (N) F.H. — NEW FIRE HYDRANT (TO PROVIDE 1500 GPM @ 20 PSI)
- (N) F.D.C. — NEW FIRE DEPARTMENT CONNECTION
- PROPERTY LINE
- EXISTING ACCESSIBLE ROUTE PER DSA **A# 02-118432**
- PROPOSED ACCESSIBLE ROUTE (2022 C.B.C. SECTION 11B - 206)
- FIRE ACCESS DISTANCE (< 300' PER CFC 503.1.1)
- EXISTING FIRE TRUCK ACCESS LANE PER DSA A# 02-104327 & #02-105699
- 20'-0" WIDE TEMPORARY FIRE ACCESS LANE, UNDER (INCREMENT 1)
- FIRE APPARATUS ACCESS ROAD WITH THAT HAS AN UNOBSTRUCTED WIDTH OF 20'-0" MIN. AND AN UNOBSTRUCTED VERTICAL CLEARANCE OF 13'-6" MIN., AS WELL AS OTHER REQUIREMENTS PER CFC CH. 503
- HEAVY DUTY ASPHALT PAVING, SEE CIVIL **C/X101.2**

THE ACCESSIBLE ROUTE IS A CONTINUOUS UNOBSTRUCTED PATH CONNECTING ACCESSIBLE ELEMENTS AND SPACES OF AN ACCESSIBLE SITE, BUILDING OR FACILITY THAT CAN BE NEGOTIATED BY A PERSON WITH A DISABILITY USING A WHEELCHAIR, AND THAT IS ALSO SAFE FOR AND USABLE BY PERSONS WITH OTHER DISABILITIES. ACCESSIBLE ROUTES SHALL COMPLY WITH CBC 11B-402. IN GENERAL, EXTERIOR ACCESSIBLE ROUTES SHALL COMPLY WITH THE FOLLOWING: SHALL BE STABLE, FIRM, AND SLIP RESISTANT; HAVE A 1:20 MAXIMUM RUNNING SLOPE FOR WALKS; HAVE A 1:12 MAXIMUM SLOPE FOR RAMPS AND CURB RAMPS; HAVE A 1/4:12 MAXIMUM CROSS SLOPE; HAVE A 48" MINIMUM WIDTH; HAVE NO VERTICAL OFFSETS GREATER THAN 1/4"; OFFSETS BETWEEN 1/4" AND 1/2" SHALL BE BEVELED WITH A SLOPE NOT EXCEEDING 1V:2H; HAVE NO OPENINGS ALLOWING THE PASSAGE OF A 1/2" DIAMETER SPHERE; ELONGATED OPENINGS SHALL BE PERPENDICULAR TO THE DIRECTION OF TRAVEL; HAVE A MINIMUM 6" HIGH CURB OR GUARDRAIL AT EDGES WHERE THE DROP OFF EXCEEDS 4" EXCEPT WHERE ADJACENT TO VEHICULAR WAYS; BE FREE OF ELEMENTS PROJECTING MORE THAN 4" FROM WALLS BETWEEN 27" AND 80" ABOVE THE WALKING SURFACE; AND HAVE 80" MINIMUM VERTICAL CLEARANCE.

DESIGN PROFESSIONAL IN CHARGE STATEMENT:

- THE P.O.T. IDENTIFIED IN THESE CONSTRUCTION DOCUMENTS MEETS THE REQUIREMENTS OF THE CURRENT APPLICABLE CALIFORNIA BUILDING CODE (CBC) ACCESSIBILITY PROVISIONS FOR PATH OF TRAVEL REQUIREMENTS FOR ALTERATIONS, ADDITIONS AND STRUCTURAL REPAIRS.
- AS PART OF THE DESIGN OF THIS PROJECT, THE P.O.T. WAS EXAMINED AND ANY ELEMENTS, COMPONENTS, OR PORTIONS OF THE P.O.T. THAT WERE DETERMINED TO BE NONCOMPLIANT WITH THE CBC HAVE BEEN IDENTIFIED AND THE CORRECTIVE WORK NECESSARY TO BRING THEM INTO COMPLIANCE HAS BEEN INCLUDED WITHIN THE SCOPE OF THIS PROJECT'S WORK THROUGH DETAILS, DRAWINGS, AND SPECIFICATIONS INCORPORATED INTO THESE CONSTRUCTION DOCUMENTS.
- ANY NONCOMPLIANT ELEMENTS, COMPONENTS OR PORTIONS OF THE P.O.T. THAT WILL NOT BE CORRECTED BY THIS PROJECT BASED ON VALUATION THRESHOLD LIMITATIONS OR A FINDING OF UNREASONABLE HARDSHIP ARE INDICATED IN THESE CONSTRUCTION DOCUMENTS.
- DURING CONSTRUCTION, IF P.O.T. ITEMS WITHIN THE SCOPE OF THE PROJECT REPRESENTED AS CBC COMPLIANT ARE FOUND TO BE NONCONFORMING BEYOND REASONABLE CONSTRUCTION TOLERANCES, THEY ITEMS SHALL BE BROUGHT INTO COMPLIANCE WITH THE CBC AS A PART OF THIS PROJECT BY MEANS OF A CONSTRUCTION CHANGE DOCUMENT.

BICYCLE PARKING ANALYSIS FOR NEW BUILDING

NUMBER OF PARKING SPACES REQUIRED (PER CGBSC 5-106.4.2)
(8) BICYCLE RACK SPACES
(2) STAFF BICYCLE SPACES

ACTUAL NUMBER OF PARKING SPACES PROVIDED:
(3) BICYCLE RACKS W/ (3) BIKES PER SIDE = (9) BIKE CAPACITY > (8) REQD. (OKAY)

(1) LOCKABLE BICYCLE ROOM W/ PERMANENTLY ANCHORED RACKS W/ (2) BICYCLE CAPACITY

(E) PARKING LOT 1 - PARKING ANALYSIS

EXISTING PARKING LOT SUMMARY

ACCESSIBLE PARKING STALLS	1
VAN ACCESSIBLE PARKING STALLS	1
REGULAR PARKING STALLS	10
TOTAL PARKING STALLS	12

(E) PARKING LOT 7 - PARKING ANALYSIS

EXISTING PARKING LOT SUMMARY
DSA A#: 02-111690, #02-114366,
#02-111376 (ACCESS ONLY)

STANDARD ACCESSIBLE PARKING STALLS	18
VAN ACCESSIBLE PARKING STALLS	4
REGULAR PARKING STALLS	1,114
TOTAL PARKING STALLS	1,136

(E) PARKING LOT 7A - PARKING ANALYSIS

DSA A# 02-111690

STANDARD ACCESSIBLE PARKING STALLS	4
VAN ACCESSIBLE PARKING STALLS	1
REGULAR PARKING STALLS	108
TOTAL PARKING STALLS	113

2022 CAL GREEN EV STALLS REQUIRED PER TABLE 5.106.5.3.1 & 11B-228.3.2.
(CALCULATED AT 113 STALLS)
REQUIRED NUMBER OF EV CAPABLE SPACES = 25 TOTAL
REQUIRED NUMBER OF EV CAPABLE SPACES PROVIDED WITH EVCS = 6
INCLUDING 1 VAN ACCESSIBLE AND 1 STANDARD ACCESSIBLE WITH EVSE PROVIDED

(E) PARKING LOT 10 - PARKING ANALYSIS

EXISTING PARKING LOT SUMMARY
DSA A# 62704, #02-114082

VAN ACCESSIBLE PARKING STALLS	1
REGULAR PARKING STALLS	14
TOTAL PARKING STALLS	15

DSA 810

DSA 810

FIRE & LIFE SAFETY SITE CONDITIONS SUBMITTAL

Division of the State Architect (DSA) documents referenced within this publication are available on the DSA Forms or DSA Publications webpages.

To facilitate the Division of the State Architect's (DSA) fire and life safety plan review of project site conditions, DSA requires the design professional to provide the following information at time of project submittal for projects consisting of construction of a new campus, construction of new building(s), additions to existing buildings, and for site alternate design means for fire department emergency vehicle access, and fire suppression water supply.

Information associated with compliance items 1 through 3 below is to be provided for all project types indicated above. Information associated with items 4 through 7 is to be completed when an alternate means is utilized. Acknowledgement by the school district and signature from the Local Fire Authority (LFA) is only required when an alternate design means is being requested.

The Project Information and Fire & Life Safety Information sections are to be completed for all projects and imaged onto the fire access site plan. When an alternate design/means is proposed, all sections on pages 1 and 2 are to be completed and imaged on the fire access site plan.

For additional information refer to the instructions at the end of this form and DSA Policy *PL 09-01: Fire Flow for Buildings*.

PROJECT INFORMATION	
School District/Owner:	COLLEGE OF THE SEQUOIAS COMMUNITY COLLEGE DISTRICT
Project Name/School:	UNIVERSITY CENTER BUILDING (INCREMENT 2)/COS VISALIA CAMPUS
Project Address:	915 S MOONEY BLVD, VISALIA, CA 93277

FIRE & LIFE SAFETY INFORMATION				
1.	Has a fire hydrant flow test been performed within the past 12 months? *(If yes, provide a copy of the test data.)*	Yes ☑		No ☐
2.	Was the fire hydrant water flow test performed as part of this LFA review?	Yes ☑		No ☐
3.	Is the project located within a designated fire hazard severity zone (FHSZ) as established by Cal-Fire? *(If yes, indicate FHSZ classification below.)*	Yes ☐		No ☑
	Refer to the following website for FHSZ locations: Fire Hazard Severity Zones in State Responsibility Area	Moderate ☐	High ☐	Very High ☐
	Wildland Interface Area (WIFA) *(If any designations are checked, project design must meet the requirements of CBC Chapter 7A.)*			WIFA ☐

DSA 810
FIRE & LIFE SAFETY SITE CONDITIONS SUBMITTAL

CONDITION MEANS AND METHODS RESOLUTION		ALTERNATE ACCEPTED			
		Yes	No	N/A	N/R
4.	Emergency vehicle access roadways do not meet CFC requirements.			✓	
4a.	**Acceptable Alternate:** Emergency vehicle and personnel access as proposed by the project architect is acceptable for providing fire suppression and protection of life and property.				
5.	**Fire Hydrants:** Number and spacing does not meet CFC requirements.			✓	
5a.	**Acceptable Alternate:** Number of fire hydrants and spacing as proposed by the project architect is acceptable for fire suppression and protection of life and property.				
6.	**Fire Hydrants:** Water flow and pressure are less than CFC minimum.			✓	
6a.	**Acceptable Alternate:** The available flow and pressure is acceptable for providing fire suppression and protection of life and property.				
7.	Location of fire department connection(s) serving fire sprinkler systems or standpipe systems does not meet CFC requirements.			✓	
7a.	**Acceptable Alternate:** The location of fire department connection serving the fire sprinkler system and/or standpipe system is acceptable for providing fire suppression and protection of life and property.				

School District Acceptance of Acceptable Design Alternates

By signing this form, the school district acknowledges and accepts the proposed design as an alternative to California Building Code (CBC) and California Fire Code (CFC) minimum requirements, as indicated by one or more of the conditions indicated at items 4a, 5a, 6a or 7a, for providing fire and life safety protection of life and property.

Accepted by: BYRON WOODS Title: DEAN OF FACILITIES

Signature: _____ Date: _____

LOCAL FIRE AUTHORITY (LFA) INFORMATION		
LFA Agency Name:	VISALIA FIRE DEPARTMENT	
LFA Review Official:	CORBIN REED	
Title:	FIRE MARSHAL	Work Phone: (559) 713-4272
Work Email:	corbin.reed@visalia.city	

LFA Reviewer's Signature: _____ Date: _____

IDENTIFICATION STAMP
DIV. OF THE STATE ARCHITECT
APP: 02-122821 INC: 2
REVIEWED FOR
SS ☑ FLS ☑ ACS ☑
DATE: 11/20/2025

Teter, Inc. expressly reserves its common law copyright and other property rights in these plans. This document, the ideas and designs incorporated herein, as an instrument of professional service, is not to be used in whole or in part, for any other project without prior written authorization.

MARK	DATE	DESCRIPTION
A	11/13/2025	DSA BACKCHECK

TETER, INC.
ARCHITECTS ENGINEERS CONNECTED
FRESNO HEADQUARTERS
VISALIA | BAKERSFIELD | MODESTO | SAN LUIS OBISPO

VISALIA CAMPUS UNIVERSITY CENTER
COLLEGE OF THE SEQUOIAS
915 S. MOONEY BLVD
915 S MOONEY BLVD, VISALIA, CA 93277

DRAWING TITLE
LOCAL FIRE AUTHORITY SITE PLAN (INC. 2)

PROJECT NO.
22-12498

DRAWING
G100.2

PLOT DATE: 10/30/2025 3:04:31 PM

LOCAL FIRE AUTHORITY SITE PLAN

1" = 40'-0"

10

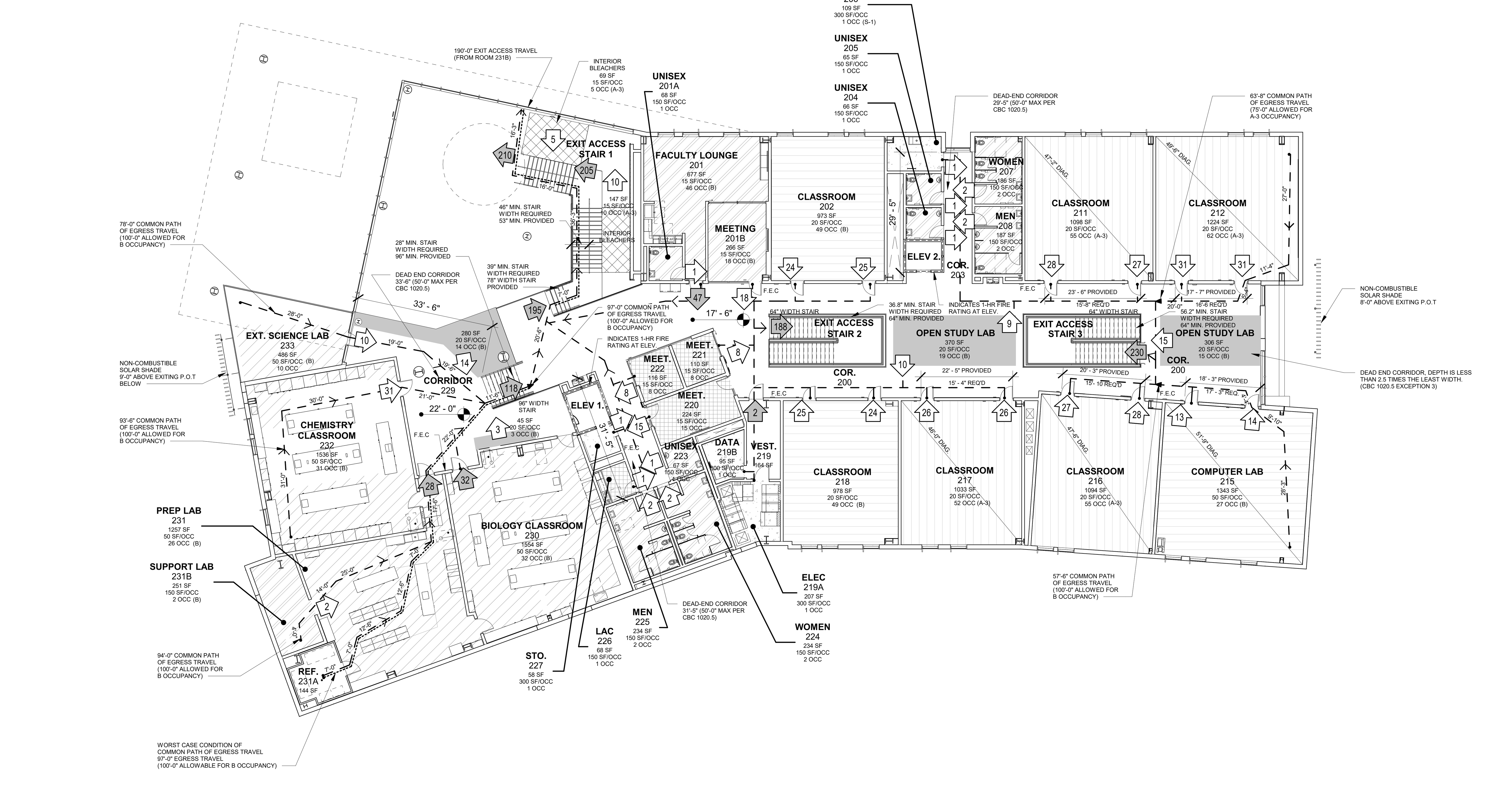

BUILDING CODE ANALYSIS - SECOND FLOOR 1/16" = 1'-0" 8

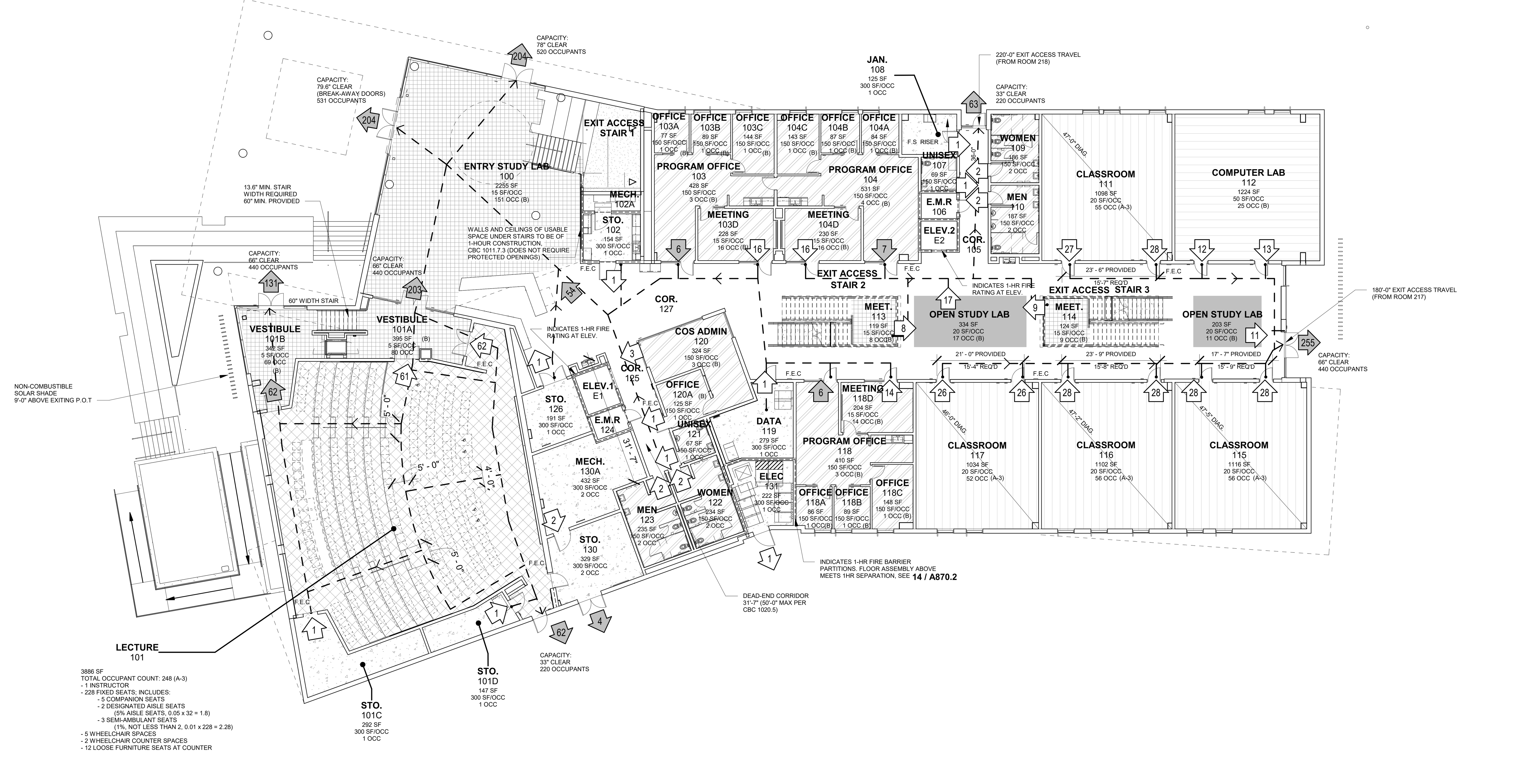

BUILDING CODE ANALYSIS - FIRST FLOOR 1/16" = 1'-0" 10

KEYNOTES (00.00)

BUILDING CODE ANALYSIS

BUILDING CLASSIFICATION - TWO STORY UNIVERSITY CENTER

A. OCCUPANCY CLASSIFICATIONS (CBC SECTION 302)
   A. 'A-3', ASSEMBLY (GENERAL) & EDUCATIONAL CLASSROOMS PER DSA 1R-A26.CC SECTION 1-2 WITH 50 OCCUPANTS OR GREATER.
   B. 'B', BUSINESS/COLLEGE CLASSROOMS, EDUCATIONAL & VOCATIONAL LESS THAN 50 OCCUPANTS (PRIMARY USE) PER DSA 1R-A26.CC.

B. TYPE OF CONSTRUCTION: TYPE II-B NON COMBUSTIBLE (FULL AUTOMATIC FIRE SPRINKLERS)

C. HEIGHT AND AREA JUSTIFICATIONS AND CALCULATIONS:

THE FOLLOWING IS BASED ON A-3 OCCUPANCY, TYPE II-B CONSTRUCTION, SPRINKLERED, MULTI-STORY WITHOUT HEIGHT INCREASES PER CBC TABLES 504.3,504.4, AND 506.2

HEIGHT IN FEET:
ALLOWABLE: 55'
ACTUAL: 45'

HEIGHT IN STORIES:
ALLOWABLE: 2
ACTUAL: 2 STORIES

AREA:
NOTE: ALLOWABLE AREA BASED ON NON-SEPARATED OCCUPANCY PROVISIONS OF CBC 508.3 WITH THE AREA BASED ON A-3 OCCUPANCY BEING THE MOST RESTRICTIVE FOR THE AREA.

ALLOWABLE AREA FACTORS:
At = 28,500 SF (WITHOUT HEIGHT INCREASE)
NS = 9,500 SF

ALLOWABLE AREA CALCULATION:
(CBC 506.2.3, EQUATION 5-2, SINGLE OCCUPANCY, MULTI-STORY BUILDING)

Aa = At + (NS X If) X Sa

IF INCREASE NOT CONSIDERED, VALUE OF If = 0
Sa = 2

Aa = 28,500 SF X 2 = 57,000 SF TOTAL ALLOWABLE BUILDING AREA, 28,500 SF MAXIMUM PER FLOOR.

ACTUAL AREA:	GND FLR. (SF)	SCND FLR. (SF)	
ENCLOSED	25,338	24,125	
BALCONY	N/A	487	
TOTAL	25,338	24,612	49,950*
OVERHANGS	671	3,423	
GRAND TOTAL	26,009	28,035	54,044

* LIFE CYCLE ASSESSMENT PER CALGREEN 5.409.1 (DSA-SS) DOES NOT APPLY TO THIS BUILDING (COMBINED 'FLOOR AREA' DOES NOT EXCEED 50,000 SF)

OCCUPANT LOAD FACTORS

PER 2022 CALIFORNIA BUILDING CODE TABLE 1004.5, FOR THE FOLLOWING USES:
A. BUSINESS: 150 SF/OCC. GROSS
B. ASSEMBLY (UNCONCENTRATED): 15 SF/OCC. NET
C. ASSEMBLY WITH FIXED SEATS: DETERMINED BY THE NUMBER OF FIXED SEATS, 1 WHEELCHAIR SPACE = 1 OCCUPANT
D. ACCESSORY STORAGE ROOMS, MECHANICAL AND ELECTRICAL EQUIPMENT ROOMS: 300 SF/OCC. GROSS
E. WAITING ROOMS (ASSEMBLY, LESS CONCENTRATED): 15 SF/OCC. NET
F. EDUCATIONAL:
   - CLASSROOMS: 20 SF/OCC.
   - LABORATORIES: 50 SF/OCC

TOTAL BUILDING OCCUPANT LOAD:
FIRST FLOOR: 903
SECOND FLOOR: 646
BUILDING TOTAL: 1,549

CORRIDOR CONSTRUCTION

A. FIRE RESISTIVE RATING (CBC SECTION 1020 AND TABLE 1020.1): NONE REQUIRED FOR SPRINKLERED BUILDING
B. CORRIDOR WIDTH (CBC TABLE 1020.2): 44" MIN.
C. DEAD END CORRIDOR (CBC SECTION 1020.5) 50'-0" MAXIMUM (SEE PLAN)

EGRESS

A. COMMON PATH OF EGRESS TRAVEL (CBC TABLE 1006.2.1): 75'-0" MAX. FOR 'A' OCC., 100'-0" MAX. FOR 'B' OCC.
B. EXIT ACCESS TRAVEL DISTANCE (CBC SECTION 1017 & TABLE 1017.2): 200'-0" MAX. FOR 'A' OCC., 300'-0" MAX. FOR 'B' OCC.
C. NUMBER OF EXITS REQUIRED (CBC SECTION 1006 & TABLE 1006.3.3)
   1. REQUIRED FOR FIRST FLOOR: 1,042 OCCUPANTS = 4 MIN. (6 PROVIDED)
   2. REQUIRED FOR SECOND FLOOR: 588 OCCUPANTS = 3 MIN. (3 PROVIDED)
   3. EXIT SEPARATION AT ROOMS REQUIRING 2 EXITS: 1/3 ROOM DIAGONAL (CBC 1007.1.1, EXCEPTION 2)
D. EGRESS WIDTH COMPONENT (CBC SECTION 1005.3.2): 0.15"/OCC. (EMERGENCY VOICE ALARM SYSTEM); A 36" WIDE DOOR HAS A CLEAR WIDTH OF 33" MIN. AND WILL ACCOMMODATE 220 OCCUPANTS
E. EGRESS WIDTH STAIRS (CBC SECTION 1005.3.1): 0.2"/OCC. (EMERGENCY VOICE ALARM SYSTEM); 66" STAIR WIDTH WILL ACCOMMODATE 330 OCCUPANTS
F. SEE EXITING PLAN FOR TRAVEL DISTANCE AND EGRESS WIDTH.

PHOTOVOLTAIC SHADE STRUCTURE

STRUCTURE 'A':
TYPE OF CONSTRUCTION: II-B
HEIGHT IN FEET AND STORIES:
ALLOWABLE (CBC TABLE 504.3 AND 504.4): 55 FEET / 3 STORIES
ACTUAL VARIES ± 25'-0" MAX.
AREA:
ALLOWA BLE AREA PER (CBC 506): 26,000 SF
ACUTAL AREA: 4,536 SF
OCCUPANCY: S-2
SQUARE FOOTAGE: 4,540 SF
OCCUPANT LOAD FACTOR: 200 SQ.FT./ OCC.
SQUARE FOOTAGE/OCCUPANT LOAD FACTOR =
TOTAL: 23 OCCUPANTS

PLUMBING FIXTURE CALCULATION

GROUP 'B':
PER CPC SECTION 422.1, TABLE A, COLLEGE OCCUPANT LOAD FACTORS ARE 50 SF/OCCUPANT.

49,463 SF/ 50 SF/OCC = 989
990 OCC / 2 = 495 MEN, 495 WOMEN

FIXTURE COUNT REQUIRED (2022 CPC SECTION 422.1, TABLE A)
MENS: 4 WATER CLOSETS; 4 URINALS; 3 LAVATORIES
WOMENS: 9 WATER CLOSETS; 5 LAVATORIES

TOTAL FIXTURE COUNT PROVIDED:
MENS: 6 WATER CLOSETS; 6 URINALS; 8 LAVATORIES
WOMENS: 12 WATER CLOSETS; 8 LAVATORIES

UNISEX: 6 WATER CLOSETS; 6 URINALS; 6 LAVATORIES

DRINKING FOUNTAINS: 4

TACTILE EXIT SIGNAGE:
TACTILE EXIT SIGNAGE SHALL BE PROVIDED AT THE FOLLOWING LOCATIONS:
- EXTERIOR EXIT DOORS A THE LEVEL OF DISCHARGE
- INTERIOR ROOMS/SPACES REQUIRED TO HAVE 2 EXITS

ROOM OCCUPANT LOAD SIGNAGE:
ROOM OCCUPANT LOAD SIGNAGE SHALL BE PROVIDED AT ALL ROOMS/ SPACES HAVING AN OCCUPANT LOAD OF 50 OR MORE.

ASSISTIVE LISTENING SYSTEMS SIGNAGE:
ASSISTIVE LISTENING SYSTEMS SIGNAGE SHALL BE PROVIDED IN ALL CLASSROOMS, MEETINGS ROOMS AND CONFERENCE ROOMS.

ASSISTIVE LISTENING SYSTEM:
ASSISTIVE LISTENING SYSTEM DEVICES SHALL BE PROVIDED FOR ALL CLASSROOMS, MEETING ROOMS, AND CONFERENCE ROOMS; THE QUANTITY SHALL BE BASED ON 4% OF THE TOTAL SEATING/OCCUPANTS OF ALL CLASSROOMS, MEETING ROOMS AND CONFERENCE ROOMS.

LEGEND

- PATH OF EXIT ACCESS TRAVEL
- MOST REMOTE OCCUPIED LOCATION
- DIRECTION OF EGRESS
- XX — NUMBER OF OCCUPANTS EXITING FROM A ROOM OR AREA
- XX — CUMULATIVE NUMBER OF OCCUPANTS EXITING FROM A ROOM OR AREA
- ROOM — ROOM NAME & NUMBER (101)
- 150 SF (NET) — ROOM AREA
- 50 SF/OCC — OCCUPANT LOAD FACTOR
- 00 OCC (X) — CALCULATED OCCUPANT LOAD AND OCCUPANCY CLASSIFICATION
- HATCH 1 (NO HATCH): CIRCULATION, CHASE AND MISC. STRUCTURAL SPACE
- HATCH 2 (DOUBLE DIAGONAL): 'B' OCCUPANCY; OFFICE USE, TOILETS 150 SF/OCC.
- HATCH 3 (SOLID GREY): 'B' OCCUPANCY; COLLEGE CLASSROOMS, 20 SF/OCC. < 49 OCC.
- HATCH 4 (DIAGONAL): 'B' OCCUPANCY; VOCATIONAL CLASSROOM, 50 SF/OCC.
- HATCH 5: 'A-3' OCCUPANCY; COLLEGE CLASSROOMS, 20 SF/OCC. > 49 OCC.
- HATCH 6 (CROSSHATCH): 'B' OCCUPANCY; WAITING, LOBBY USE, UNCONCENTRATED ASSEMBLY 15 SF/OCC. , ≤ OR EQ. 49 OCC.
- HATCH 7 (DIAGONAL CROSSHATCH): 'A-3' OCCUPANCY, ASSEMBLY WITH FIXED SEATS. SEE **10 / A232.2** FOR ADDITIONAL SEATING INFORMATION
- HATCH 8 (HORIZONTAL): 'B' OCCUPANCY, VOCATIONAL CLASSROOM, 50 SF/OCC.
- HATCH 9 (CONCRETE): STORAGE, MECH. & ELEC. SPACES. 300 SF/OCC.

IDENTIFICATION STAMP
DIV. OF THE STATE ARCHITECT
APP: 02-122821 INC: 2
REVIEWED FOR
SS ☑ FLS ☑ ACS ☑
DATE: 11/20/2025

Teter, Inc. expressly reserves its common law copyright and other property rights in these plans. This document, the ideas and designs incorporated herein, as an instrument of professional service, is not to be used in whole or in part, for any other project without prior written authorization.

MARK	DATE	DESCRIPTION
A	11/13/2025	DSA BACKCHECK

LICENSED ARCHITECT JONATHAN COULTER C-33093 REN. 03-31-27 STATE OF CALIFORNIA

TETER, INC.
FRESNO HEADQUARTERS
VISALIA | BAKERSFIELD | MODESTO | SAN LUIS OBISPO
ARCHITECTS ENGINEERS CONNECTED

VISALIA CAMPUS UNIVERSITY CENTER
COLLEGE OF THE SEQUOIAS - INCREMENT 2
915 S. MOONEY BLVD
VISALIA, CALIFORNIA

DRAWING TITLE
BUILDING CODE ANALYSIS

PROJECT NO.
22-12498

DRAWING
G201.2

\\tetr-file1\Users\tara.chong_TETR\Documents\12498-A-UC_tara.chong.rvt

PLOT DATE: 11/10/2025 8:44:56 AM

P:\223\223-02811SiteProductionDrawings\223281_ts02.dwg

GENERAL TOPOGRAPHIC SURVEY LEGEND:

(NOT ALL SYMBOLS SHOWN APPEAR ON THE PLANS)

AB	ABUTMENT
AC	ASPHALTIC CONCRETE
ACE	ASPHALTIC CONCRETE EDGE
AD	ASPHALTIC CONCRETE DIKE
AWT	ALL-WEATHER TRACK
BD	BRIDGE DECK
BFC	BOTTOM FACE OF CURB
BGST	STEPS
BGTR	TOP OF ROOF
BGV	BUILDING VENTS
BOD	BOTTOM OF DITCH
BR	BARRICADE
BRK	BRICK
BW	BARRIER WALL
CB	CATCH BASIN
CDA	CONCRETE DRIVE APPROACH
CE	CONCRETE EDGE
CMP	CORRUGATED METAL PIPE
CON	CONCRETE
COTH	COMMUNICATION TRENCH
CR	CROWN OF ROAD
CRQ	QUARTER CROWN
CS	CONCRETE SLAB
CULV	CULVERT
CW	CONCRETE WALL
DD	DOWN DRAIN
DFL	DITCH FLOWLINE
DWY	DRIVEWAY
ECTH	ELECTRICAL TRENCH
EDR	EDGE OF DIRT ROAD
EGR	EDGE OF GRAVEL ROAD
EOD	EDGE OF OILED DIRT
EP	EDGE OF PAVEMENT
ES	EDGE OF SHOULDER
ET	EDGE OF TRAVELED WAY
FF	FINISH FLOOR
FOTH	FIBER OPTIC TRENCH
GB	GRADE BREAK
GFL	GUTTER FLOWLINE
GR	GRATE
GRA	GRAVEL SPOT SHOT
GRAE	EDGE OF GRAVEL
GSTH	GAS TRENCH
HDR	WOOD HEADER
HW	HEAD WALL
KR	K-RAIL
LIP	LIP OF GUTTER
LSDE	DECOMPOSED GRANITE EDGE
LSDG	DECOMPOSED GRANITE
LSGC	GROUND COVER
LSGF	GOLF COURSE FAIRWAY
LSGG	GOLF COURSE GREEN
LSGT	GOLF COURSE TEE
LSSA	SAND
LSSP	SLOPE PROTECTION
LSST	GOLF COURSE SAND TRAP
NPTH	NON-POTABLE TRENCH
PA	PATIO
PGTH	PROPANE GAS TRENCH
POS	POINT ON SLOPE
RCP	REINFORCED CONCRETE
RIEL	RIPARIAN EDGE OF LAKE
RIEP	RIPARIAN EDGE OF POND
RIES	RIPARIAN EDGE OF STREAM
RIEW	RIPARIAN EDGE OF WETLAND
RIFL	RIPARIAN FLOWLINE
RMC	RIPARIAN MISC.
RIP	RIP-RAP SLOPE PROTECTION
RK	ROCK
RW	RETAINING WALL
SB	SPEED BUMP
SDCD	STORM DRAIN CROSS DRAIN
SDFL	STORM DRAIN FLOWLINE
SDGR	STORM DRAIN GRATE
SDMG	STORM DRAIN MANHOLE W/ GRATE
SSFL	SEWER FLOWLINE
SDTH	STORM DRAIN TRENCH
SSGT	STORM DRAIN GREASE TRAP
SSST	SEWER TANK (SEPTIC)
SSTH	SEWER TRENCH
SWK	SIDEWALK
SWL	SWALE
T	TURF
TBC	TOP BACK OF CURB
TBW	TOP BACK OF WALK
TF	TOP OF FOOTING
TFC	TOP FACE OF CURB
TFW	TOP FACE OF WALK
TLTH	TELEPHONE TRENCH
TOB	TOP OF BANK
TOE	TOE OF SLOPE
TOP	TOP OF SLOPE
TRDO	TRUNCATED DOMES
TVTH	TV TRENCH
TW	TOP OF WALL
UTH	UNIDENTIFIED TRENCH/SCAR LINE
VGFL	VALLEY GUTTER FLOWLINE
VGR	VALLEY GUTTER
WALBA	BARRIER WALL
WALBW	BLOCK WALL
WALCW	CONCRETE WALL
WALHW	HEAD WALL
WALRW	RETAINING WALL
WALWW	WING WALL
WCR	WHEELCHAIR RAMP
WLPD	WELL PAD
WTTH	WATER TRENCH
WW	WING WALL
(335.21)	EXISTING ELEVATION
AL	ACCENT LIGHT
AV	ALFALFA VALVE
	BACKFLOW ASSEMBLY
	BASKETBALL GOAL
BOV	BLOW-OFF VALVE
	BM=BENCHMARK; OR SBM=SITE BENCHMARK
BO	BOLLARD
CO	CLEANOUT
COPB	COMMUNICATION PULLBOX
COVA	COMMUNICATION VAULT
312.88	SURVEY CONTROL MONUMENT
DF	DRINKING FOUNTAIN
DS	DOORSTOP
DW	DRYWELL
EG	ELECTRICAL GROUND
ELC	ELECTRICAL CONDUIT
	ELECTRICAL METER
EPB	ELECTRICAL PULLBOX
	ELECTRICAL VAULT LID
ETS	GAS ELECTRONIC TESTING STATION
FDC	FIRE DEPARTMENT CONNECTION
FH	FIRE HYDRANT
FP	FENCE POST
FLP	FLAG POLE
GAS	GAS LINE; DIAMETER AS SHOWN
GR	GAS REGULATOR
GAV	IRRIGATION GATE VALVE
	GAS METER
GOGP	GOAL POST
GP	GUY POLE
GS	GATE STOP
GSR	GAS RISER
GV	GAS VALVE
GRD	GROUNDING ROD
GUY	GUY WIRE
HB	HOSE BIBB
HR	HANDRAIL
ICB	IRRIGATION CONTROLLER
	IRRIGATION DISTRICT MANHOLE
IVA	IRRIGATION REMOTE CONTROL VALVE
ISB	IRRIGATION SPLICE BOX
IHB	IN-GROUND HOSE BIBB
IP	IRON PIPE
JP	JOINT UTILITY POLE
LP	LIGHT POLE
MB	MAIL BOX
	MANHOLE
MV	MANUAL IRRIGATION VALVE
PB	PULLBOX
PIV	POST INDICATOR VALVE
	UTILITY STUB
	PARKING METER
POST	POST; DIAMETER AS SHOWN
PP	POWER POLE
PVC	PVC PIPE; DIAMETER AS SHOWN
QC	QUICK COUPLER VALVE
RD	ROOF DRAIN
RDU	ROOF DRAIN UNDERGROUND
RS	ROOF SUPPORT
	STADIUM LIGHT POLE
	STORM DRAIN MANHOLE
	SIGN
PPB	SIGNAL LIGHT PUSH BUTTON
	STREET LIGHT
SLE	PIPE SLEEVE; DIAMETER AS SHOWN
	SLOPE
SLPB	STREET LIGHT PULLBOX
4"SLV	PIPE SLEEVE; DIAMETER AS SHOWN
S	SEWER MANHOLE
SP	SERVICE POLE
SPB	SIGNAL PULLBOX
SPO	STEEL POST; DIAMETER AS SHOWN
12"SS	SAND SEPARATOR; SIZE AS NOTED
24"STP	STAND PIPE; DIAMETER AS NOTED
12"STUMP	TREE STUMP; DIAMETER AS SHOWN
MW	SURVEY MONUMENT WELL
4"TEL	TELEPHONE; DIAMETER AS SHOWN
	TELEPHONE MANHOLE
TN	TENNIS NET POLE
TP	TELEPHONE POLE
TPB	TELEPHONE PULLBOX
TVPB	TELEVISION PULLBOX
	TREE; SPREAD SHOWN GRAPHICALLY AND TRUNK DIAMETER AS SHOWN
	PALM TREE; SPREAD SHOWN GRAPHICALLY
TSB	TELEPHONE SPLICE BOX
	TRAFFIC SIGNAL POLE
TSPB	TRAFFIC SIGNAL PULLBOX
UP	UTILITY POLE
UR	UTILITY RISER
VB	VACUUM BREAKER
VN	VOLLEYBALL NET POST
2"VP	VENT PIPE; DIAMETER AS SHOWN
WELL	WELL
	WATER METER
WP	WELL PUMP
WPO	CIRCULAR WOOD POST; DIAMETER AS SHOWN
4"x4"WPO	SQUARE WOOD POST; SIZE AS SHOWN
4"W	WATER LINE; DIAMETER AS SHOWN
WV	WATER VALVE
	ASPHALT PAVEMENT
	CONCRETE BLOCK WALL
	BUILDING
	CONCRETE
	DETECTABLE WARNINGS
	DG OR GRAVEL
	CHAIN LINK FENCE
	CHAIN LINK ROLL GATE
	EDGE OF ASPHALT PAVEMENT
	WOOD FENCE
	DIRECTION OF FLOW
E	UNDERGROUND ELECTRIC
G 8"	GAS LINE; SIZE AS NOTED
OT	OVERHEAD TELEPHONE
SD 18"	STORM DRAIN LINE; SIZE AS NOTED
S 12"	SEWER LINE; SIZE AS NOTED
T	UNDERGROUND TELEPHONE
W 8"	WATER LINE; SIZE AS NOTED
AG 12"	AGRICULTURAL IRRIGATION LINE; SIZE AS NOTED
A 1"	AIR LINE; SIZE AS NOTED
C	COMMUNICATION LINE
350	MAJOR GRADE CONTOUR LINE
345	MINOR GRADE CONTOUR LINE
CW 2"	CHILLED WATER LINE; SIZE AS NOTED
CWR 2"	CHILLED WATER RETURN LINE; SIZE AS NOTED
CWS 2"	CHILLED WATER SUPPLY LINE; SIZE AS NOTED
	LIMIT OF DIRT
	LIMIT OF TURF
DL 1"	DRAIN LINE; SIZE AS NOTED
EMS	EMERGENCY MANAGEMENT SYSTEM
FA	FIRE ALARM LINE
F 8"	FIRE LINE; SIZE AS NOTED
FO	FIBER OPTIC LINE
	DRAIN TUBE
HW 2"	HOT WATER LINE; SIZE AS NOTED
HWR 2"	HOT WATER RETURN LINE; SIZE AS NOTED
HWS 2"	HOT WATER SUPPLY LINE; SIZE AS NOTED
HYD	HYDRAULIC LINE
ID 18"	IRRIGATION DISTRICT; SIZE AS NOTED
	IRON FENCE
IRR 3"	IRRIGATION MAIN LINE; SIZE AS NOTED
L 1"	IRRIGATION LATERAL LINE; SIZE AS NOTED
ITS	INTELLIGENT TRAFFIC SYSTEM
JT	JOINTLY TRENCHED UTILITIES
OC	OVERHEAD COMMUNICATIONS LINE
OE	OVERHEAD ELECTRIC LINE
OEC	OVERHEAD ELECTRIC AND COMMUNICATION LINE
OET	OVERHEAD ELECTRIC AND TELEPHONE LINE
OETV	OVERHEAD ELECTRIC AND TELEVISION LINE
OETVT	OVERHEAD ELECTRIC, TELEVISION AND TELEPHONE LINE
OTS	OVERHEAD TRAFFIC SIGNAL LINE
OTV	OVERHEAD TELEVISION LINE
OU	OVERHEAD UTILITY LINE
P 6"	PETROLEUM LINE; SIZE AS NOTED
RW 3"	RECYCLED WATER IRRIGATION LINE; SIZE AS NOTED
S&SD 6"	SEWER AND STORM DRAIN LINE; SIZE AS NOTED
SFM 6"	SEWER FORCE MAIN; SIZE AS NOTED
ST 2"	STEAM LINE; SIZE AS NOTED
TFO	TRAFFIC FIBER OPTIC LINE
TS	TRAFFIC SIGNAL LINE
TV	TELEVISION LINE
UNK	UNKNOWN UTILITY LINE
X X	WIRE FENCE
	PROPERTY LINE
	CITY LIMIT
	EASEMENT 1
	EASEMENT 2
	RIGHT-OF-WAY LINE
	RIGHT-OF-WAY CENTER LINE
	SETBACK LINE

PLOT DATE: 9/22/2025 2:37:52 PM

IDENTIFICATION STAMP
DIV. OF THE STATE ARCHITECT
APP: 02-122821 INC: 2
REVIEWED FOR
SS ☑ FLS ☑ ACS ☑
DATE: 11/20/2025

Teter, Inc. expressly reserves its common law copyright and other property rights in these plans. This document, the ideas and designs incorporated herein, as an instrument of professional service, is not to be used in whole or in part, for any other project without prior written authorization.

MARK	DATE	DESCRIPTION
A	11/13/2025	DSA BACKCHECK

REGISTERED PROFESSIONAL ENGINEER
LANE R. BAILEY
No. 41703
CIVIL
STATE OF CALIFORNIA
9/2/2025
Date Signed:

TETER, INC.
FRESNO HEADQUARTERS
VISALIA I BAKERSFIELD I MODESTO I SAN LUIS OBISPO
ARCHITECTS ENGINEERS CONNECTED
TETER

VISALIA CAMPUS UNIVERSITY CENTER
COLLEGE OF THE SEQUOIAS
915 S. MOONEY BLVD
915 S MOONEY BLVD, VISALIA, CA 93277

DRAWING TITLE
TOPOGRAPHIC SURVEY LEGEND AND NOTES

PROJECT NO.
22-12498

DRAWING
C100.2

Blair, Church & Flynn
CONSULTING ENGINEERS
455 Clovis Avenue, Suite 200
Clovis, California 93612
Tel (559) 326-1400
Fax (559) 326-1900

Drawing: P:\223\223-02811SiteProductionDrawings\223281_ts02.dwg, 9/22/2025 2:37:52 PM, Plot By: Hannah Sita

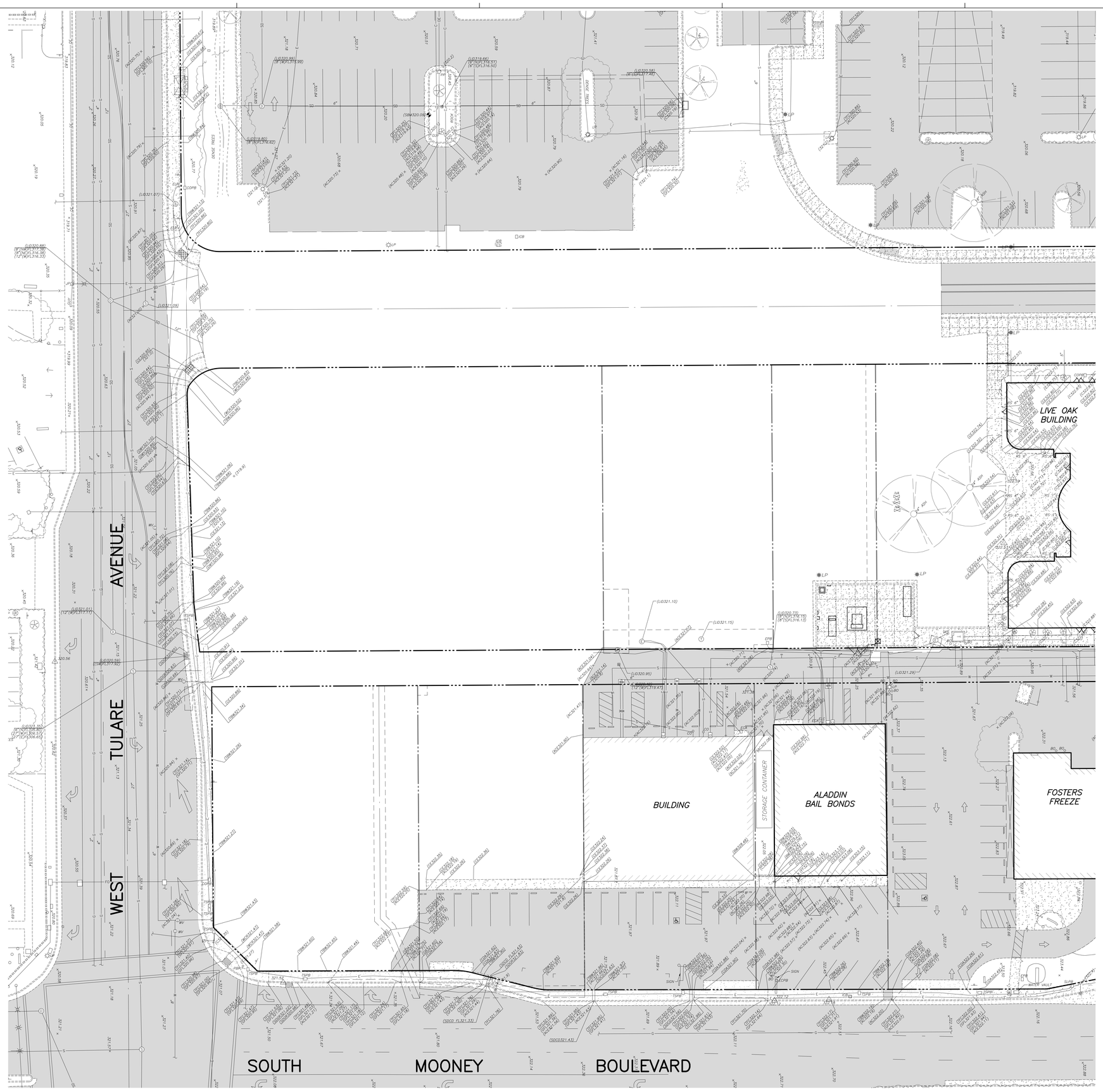

SURVEY NOTES:

1. THIS TOPOGRAPHIC SURVEY LOCATES SPECIFIC PHYSICAL FEATURES OF THE SITE AND THEIR ELEVATION AS DETERMINED NECESSARY BY THE PROJECT ENGINEER. IT IS NOT A COMPLETE TOPOGRAPHIC SURVEY OF THE SITE. THE INFORMATION SHOWN REFLECTS THE DATA OBTAINED BY FIELD SURVEY CONDUCTED ON 09/29/23, 11/01/23, 12/08/23, 9/05/23, AND AN AERIAL SURVEY CONDUCTED ON 10/07/23.
2. UTILITY INFORMATION SHOWN HEREON IS BASED ON RECORD INFORMATION SUPPLIED TO THE ENGINEER BY UTILITY COMPANIES, PUBLIC AGENCIES, AND THE PROPERTY OWNER, TOGETHER WITH OBSERVATION OF VISIBLE EVIDENCE BY A FIELD SURVEY. THE ENGINEER CAN MAKE NO GUARANTEE AS TO THE ACCURACY OR COMPLETENESS OF THE UNDERGROUND UTILITY FACILITIES SHOWN. PRIOR TO ANY SITE EXCAVATIONS, THE CONTRACTOR SHALL CONTACT THE OWNER AND UNDERGROUND SERVICE ALERT (USA) AND REQUEST THAT THEY IDENTIFY THE LOCATION OF ALL UNDERGROUND UTILITIES AT THE SITE.

SITE BENCHMARK:

CHISELED 'X' IN THE PARKING LOT ISLAND CONCRETE, 297' SOUTH AND 138' WEST OF THE SOUTHWEST CORNER OF THE LIVE OAK BUILDING.

ELEV.= 320.09' NAVD88 DATUM

SCALE: 1"=20'

0 5 20 40
SCALE IN FEET

IDENTIFICATION STAMP
DIV. OF THE STATE ARCHITECT
APP: 02-122821 INC: 2
REVIEWED FOR
SS ☑ FLS ☑ ACS ☑
DATE: 11/20/2025

Teter, Inc. expressly reserves its common law copyright and other property rights in these plans. This document, the ideas and designs incorporated herein, as an instrument of professional service, is not to be used in whole or in part, for any other project without prior written authorization.

MARK	DATE	DESCRIPTION
A	11/13/2025	DSA BACKCHECK

REGISTERED PROFESSIONAL ENGINEER
LANE R. BADGER
No. 47033
CIVIL
STATE OF CALIFORNIA
9/2/2025
Date Signed:

TETER, INC.
FRESNO HEADQUARTERS
VISALIA | BAKERSFIELD | MODESTO | SAN LUIS OBISPO
ARCHITECTS ENGINEERS CONNECTED

VISALIA CAMPUS UNIVERSITY CENTER
COLLEGE OF THE SEQUIOAS
915 S. MOONEY BLVD
915 S MOONEY BLVD, VISALIA, CA 93277

DRAWING TITLE
TOPOGRAPHICAL SURVEY

PROJECT NO.
22-12498

DRAWING
C101.2

Blair, Church & Flynn
CONSULTING ENGINEERS
451 Clovis Avenue, Suite 200
Clovis, California 93612
Tel (559) 326-1400
Fax (559) 326-1500

P:\223\223-0281\Site\ProductionDrawings\223281_ts01.dwg

PLOT DATE: 9/22/2025 3:34:29 PM

P:\2023\23-0281\Site\ProductionDrawings\223281_de02.dwg

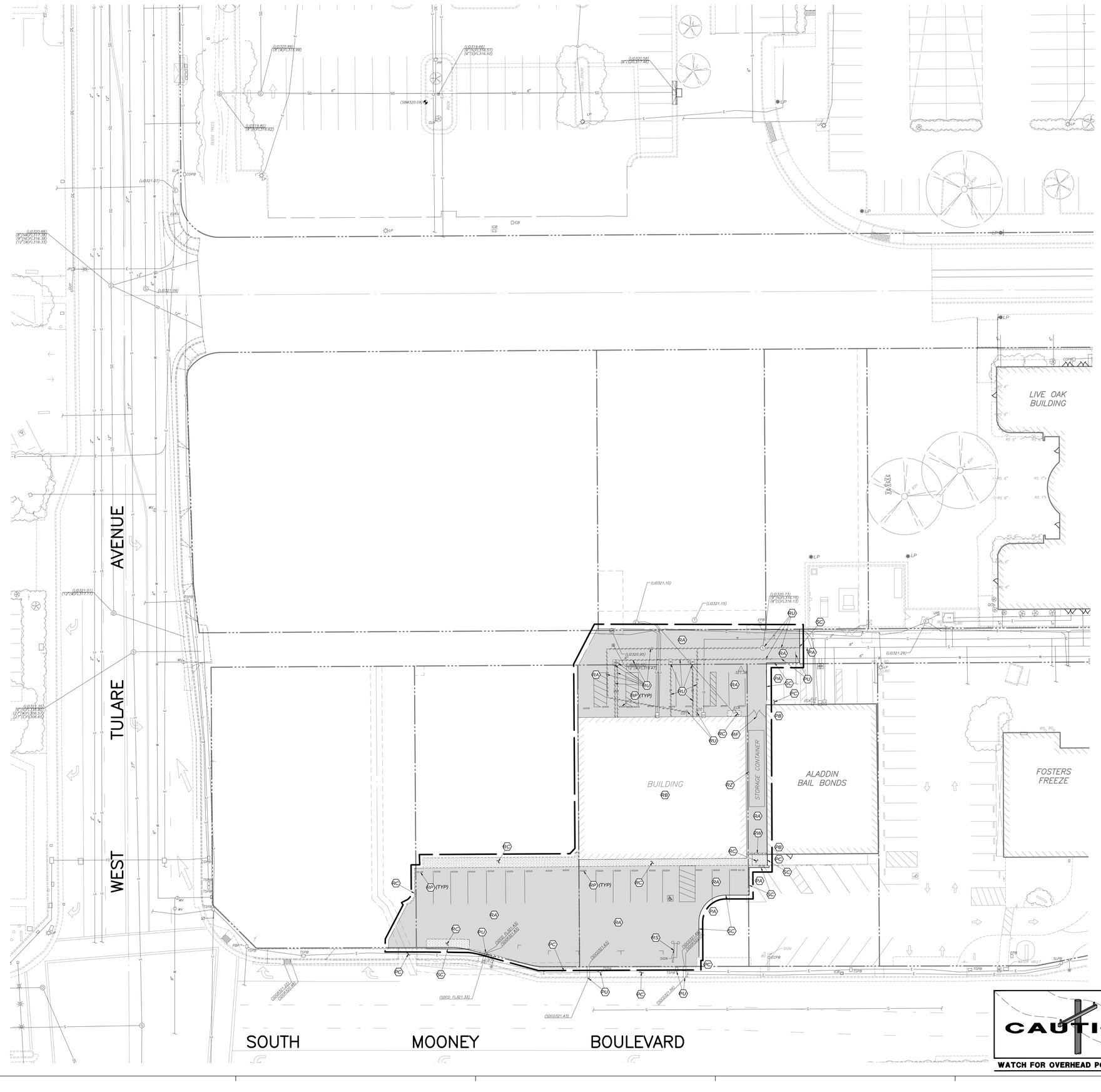

DEMOLITION LEGEND:

- REMOVE EXISTING IMPROVEMENTS AS NECESSARY TO CONSTRUCT NEW IMPROVEMENTS SHOWN ON THESE PLANS UNLESS OTHERWISE NOTED ON THE PLAN. THE REMOVAL OF IMPROVEMENTS MUST BE COORDINATED WITH ALL PLAN SHEETS. CONTRACTOR MUST ALSO COORDINATE REMOVAL OF IMPROVEMENTS WITH UTILITY AGENCIES. PROTECT ALL IMPROVEMENTS NOT DESIGNATED FOR REMOVAL. SEE NOTE 1
- LIMITS OF VEGETATION REMOVAL. 4" MINIMUM DEPTH
- LIMITS OF CONCRETE IMPROVEMENT REMOVAL
- LIMITS OF ASPHALTIC CONCRETE IMPROVEMENT REMOVAL
- (PA) PROTECT ASPHALT CONCRETE PAVEMENT TO REMAIN
- (PB) PROTECT BUILDING TO REMAIN
- (PC) PROTECT CONCRETE IMPROVEMENTS TO REMAIN
- (PU) PROTECT UTILITY TO REMAIN, SEE NOTE 10
- (PW) PROTECT CONCRETE BLOCK WALL TO REMAIN
- (RA) REMOVE AND LAWFULLY DISPOSE OF ASPHALT CONCRETE PAVEMENT STRUCTURAL SECTION
- (RB) REMOVE AND LAWFULLY DISPOSE OF BUILDING
- (RC) REMOVE AND LAWFULLY DISPOSE OF CONCRETE IMPROVEMENTS
- (RF) REMOVE AND LAWFULLY DISPOSE OF FENCE FABRIC, POSTS AND FOOTINGS
- (RP) REMOVE AND LAWFULLY DISPOSE OF CONCRETE WHEELSTOP
- (RS) REMOVE AND LAWFULLY DISPOSE OF SIGN AND FOOTING
- (RU) REMOVE AND LAWFULLY DISPOSE OF UTILITY, SEE NOTE 10
- (RZ) EXISTING STORAGE CONTAINER TO BE REMOVED BY OWNER PRIOR TO START OF WORK
- (SC) SAWCUT
- LIMIT OF CHAIN LINK FENCE REMOVAL
- LIMIT OF CONCRETE BLOCK WALL REMOVAL
- LIMIT OF SEWER LINE REMOVAL
- LIMIT OF WATER LINE REMOVAL

GENERAL DEMOLITION NOTES:

1. THE "LIMIT OF DEMOLITION" SHOWN IS APPROXIMATE AND IS GENERALLY CONSIDERED TO BE THE MINIMUM REMOVAL REQUIREMENTS. CONTRACTOR MUST COORDINATE AS NOTED IN THE LEGEND.
2. CONTRACTOR SHALL LEGALLY DISPOSE OF ALL DEMOLISHED MATERIALS OFF SITE.
3. CONTRACTOR SHALL PROTECT ALL EXISTING UTILITY IMPROVEMENTS NOT SPECIFICALLY DESIGNATED FOR REMOVAL.
4. THE ON-SITE UNDERGROUND UTILITIES SHOWN ON THIS SHEET ARE AT APPROXIMATE LOCATIONS. THE EXTENT, LOCATIONS AND SIZES ARE UNKNOWN. THE CONTRACTOR SHALL POTHOLE TO LOCATE AND VERIFY THE UNDERGROUND UTILITY LINES PRIOR TO REMOVAL.
5. CONTRACTOR TO PROTECT AND PRESERVE IN PLACE ANY FOUND SURVEY MONUMENTS. ANY MONUMENTS DISTURBED SHALL BE RESET BY A CALIFORNIA LICENSED SURVEYOR AND THE APPROPRIATE PAPERWORK FILED WITH THE CITY OR COUNTY, AT CONTRACTOR'S EXPENSE.
6. ALL HAZARDOUS MATERIALS ENCOUNTERED DURING SITE DEMOLITION SHALL BE REMEDIATED AND DISPOSED OF PER STATE AND EPA REQUIREMENTS.
7. CONTRACTOR SHALL CONTACT AND COORDINATE WITH ALL UTILITY AGENCIES PRIOR TO THE START OF ANY DEMOLITION OR CONSTRUCTION.
8. ANY EXISTING UTILITIES AND/OR IMPROVEMENTS WHICH ARE TO REMAIN, THAT BECOME DAMAGED DURING CONSTRUCTION SHALL BE COMPLETELY RESTORED TO THE SATISFACTION OF THE OWNER AND AGENCY HAVING AUTHORITY, AT THE CONTRACTOR'S SOLE EXPENSE.
9. REMOVE EXISTING IMPROVEMENTS AS NECESSARY TO CONSTRUCT NEW IMPROVEMENTS SHOWN ON THESE PLANS.
   a) FOR CONCRETE REMOVAL, REMOVE TO THE NEXT NEAREST TOOLED JOINT OR EXPANSION JOINT OF IMPROVEMENTS DESIGNATED TO REMAIN.
   b) FOR ASPHALTIC PAVEMENT REMOVAL, SAWCUT TO A STRAIGHT, CLEAN EDGE AT LOCATIONS INDICATED ON THE PLANS.
10. REFER TO MECHANICAL, ELECTRICAL, PLUMBING, IRRIGATION, AND ARCHITECTURAL PLANS FOR ADDITIONAL DEMOLITION AND COORDINATION.
11. COMPLIANCE WITH FIRE SAFETY DURING CONSTRUCTION WILL BE ENFORCED.

IDENTIFICATION STAMP
DIV. OF THE STATE ARCHITECT
APP: 02-122821 INC: 2
REVIEWED FOR
SS ☑ FLS ☑ ACS ☑
DATE: 11/20/2025

Teter, Inc. expressly reserves its common law copyright and other property rights in these plans. This document, the ideas and designs incorporated herein, as an instrument of professional service, is not to be used in whole or in part, for any other project without prior written authorization.

MARK	DATE	DESCRIPTION
A	11/13/2025	DSA BACKCHECK

REGISTERED PROFESSIONAL ENGINEER
LANE R. BAILEY
No. 47003
CIVIL
STATE OF CALIFORNIA
9/2/2025
Date Signed:

TETER, INC.
FRESNO HEADQUARTERS
VISALIA | BAKERSFIELD | MODESTO | SAN LUIS OBISPO
ARCHITECTS ENGINEERS CONNECTED
TETER
Blair, Church & Flynn
CONSULTING ENGINEERS
401 Clovis Avenue, Suite 200
Clovis, California 93612
Tel (559) 326-1400
Fax (559) 326-1500

VISALIA CAMPUS UNIVERSITY CENTER
COLLEGE OF THE SEQUOIAS
915 S. MOONEY BLVD
915 S MOONEY BLVD, VISALIA, CA 93277
DRAWING TITLE
DEMOLITION PLAN

PROJECT NO.
22-12498

DRAWING
C201.2

PLOT DATE: 9/22/2025 3:34:49 PM

Drawing: P:\2023\23-0281\Site\ProductionDrawings\223281_de02.dwg
Plot By: rdelgado Sep 22, 2025 - 3:34pm

P:\223\223-02811SiteProductionDrawings\223281_si01.dwg

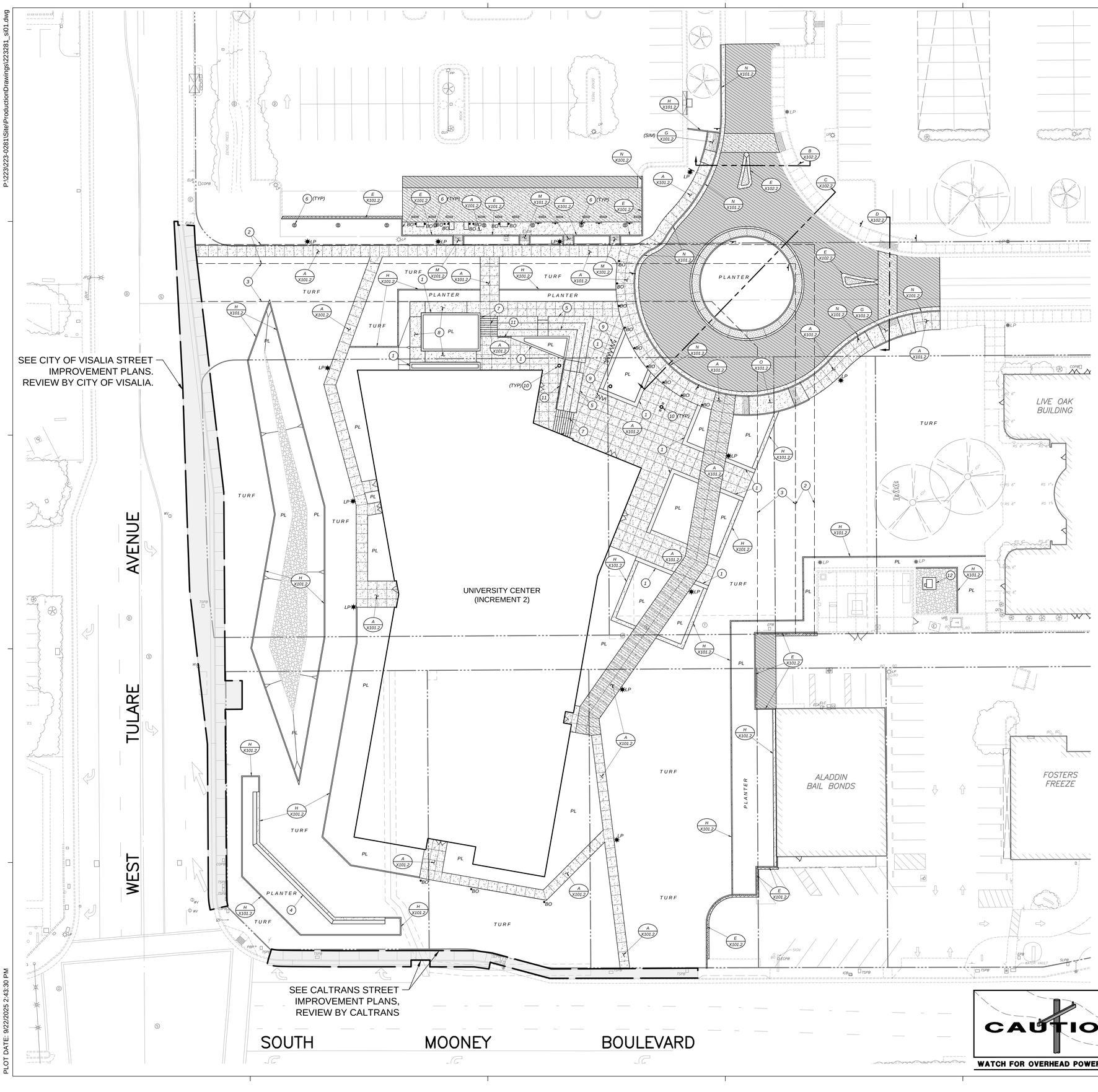

SITE LEGEND:

- LIMITS OF CONCRETE IMPROVEMENTS
- LIMITS OF HEAVY DUTY CONCRETE PAVEMENT STRUCTURAL SECTION PER DETAIL [B/X101.2]
- LIMITS OF ASPHALT PLUG IMPROVEMENTS PER DETAIL [F/X101.2]
- LIMITS OF REGULAR DUTY ASPHALTIC CONCRETE PAVEMENT STRUCTURAL SECTION PER DETAIL [C/X101.2]
- LIMITS OF HEAVY DUTY ASPHALTIC CONCRETE PAVEMENT STRUCTURAL SECTION PER DETAIL [C/X101.2]
- DETECTABLE WARNINGS PER DETAIL [L/X101.2]
- DECORATIVE CONCRETE, SEE ARCHITECTURAL PLANS
- LIMITS OF GRAVEL IMPROVEMENTS, SEE LANDSCAPE PLANS
- BO — BOLLARD, SEE ARCHITECTURAL PLANS
- PL — PLANTER
- LP — SITE LIGHTING, SEE ELECTRICAL PLANS
- SHADE STRUCTURE SUPPORTS, SEE ARCHITECTURAL PLANS
- (1) CONCRETE WALL, SEE ARCHITECTURAL PLANS
- (2) PROPOSED SEWER EASEMENT, SEE SEWER IMPROVEMENT PLANS
- (3) PROPOSED JOINT UTILITY EASEMENT, SEE CAL WATER IMPROVEMENT PLANS
- (4) CONCRETE SIGN, SEE ARCHITECTURAL PLANS
- (5) CONCRETE BLEACHERS, SEE ARCHITECTURAL PLANS
- (6) SHADE STRUCTURE SUPPORTS, SEE ARCHITECTURAL PLANS
- (7) CONCRETE STAIRS WITH HAND RAILING, SEE ARCHITECTURAL PLANS
- (8) CONCRETE ACCESSIBLE RAMP WITH HAND RAILING, SEE ARCHITECTURAL PLANS
- (9) BICYCLE RACK, SEE ARCHITECTURAL PLANS
- (10) CONCRETE COLUMN, SEE ARCHITECTURAL PLANS
- (11) BARRIER RAIL, SEE ARCHITECTURAL PLANS
- (12) BOOSTER PUMP, SEE LANDSCAPE PLANS

GENERAL SITE NOTES:

1. ALL CONCRETE MOWSTRIPS, RAMPS AND SIDEWALKS SHALL HAVE WEAKENED PLANE JOINTS AT 10 FEET MAXIMUM ON CENTER AND EXPANSION JOINTS AT 30 FEET MAXIMUM ON CENTER PER DETAIL [A/X101.2]
2. INSTALL DOWELED CONNECTION AT JOINT OF NEW CONCRETE TO EXISTING CONCRETE PER DETAIL [D/X101.2]
3. NO CONCRETE MAY BE POURED UNTIL THE FORMS HAVE BEEN REVIEWED AND APPROVED BY THE PROJECT INSPECTOR.
4. ALL BURIED METALLIC OBJECTS SHALL HAVE A PROTECTIVE COATING OR BE WRAPPED WITH APPROVED PROTECTIVE WRAP.
5. ADJUST EXISTING SPRINKLER HEADS AND LATERAL LINES AS REQUIRED BY NEW IMPROVEMENTS, OR AS SHOWN ON THE IRRIGATION PLANS.
6. ANY SURVEY MONUMENTS WITHIN THE AREA OF CONSTRUCTION SHALL BE PRESERVED OR RESET BY A PERSON LICENSED TO PRACTICE LAND SURVEYING IN THE STATE OF CALIFORNIA. REPLACEMENT TO BE AT CONTRACTOR'S SOLE EXPENSE.
7. REPAIR ALL DAMAGED AND/OR OFF-GRADE CONCRETE STREET IMPROVEMENTS AS DETERMINED BY THE AGENCY HAVING JURISDICTION PRIOR TO OCCUPANCY
8. OBTAIN ALL REQUIRED PERMITS AND APPROVALS FROM AGENCY HAVING JURISDICTION FOR WORK WITHIN THE PUBLIC RIGHT OF WAY

SEE SHEET C701.2 FOR SIGNAGE AND STRIPING PLAN

CAUTION
WATCH FOR OVERHEAD POWER LINES

SCALE: 1"=20'
0 5 20 40
SCALE IN FEET

Know what's below. Call before you dig. 811

IDENTIFICATION STAMP
DIV. OF THE STATE ARCHITECT
APP: 02-122821 INC: 2
REVIEWED FOR
SS ☑ FLS ☑ ACS ☑
DATE: 11/20/2025

Teter, Inc. expressly reserves its common law copyright and other property rights in these plans. This document, the ideas and designs incorporated herein, as an instrument of professional service, is not to be used in whole or in part, for any other project without prior written authorization.

MARK	DATE	DESCRIPTION
A	11/13/2025	DSA BACKCHECK

REGISTERED PROFESSIONAL ENGINEER
CLAYE R. BAILEY
No. 41703
CIVIL
STATE OF CALIFORNIA
9/2/2025
Date Signed:

TETER, INC.
FRESNO HEADQUARTERS
VISALIA | BAKERSFIELD | MODESTO | SAN LUIS OBISPO
ARCHITECTS ENGINEERS CONNECTED
TETER

VISALIA CAMPUS UNIVERSITY CENTER
COLLEGE OF THE SEQUOIAS
915 S. MOONEY BLVD
915 S MOONEY BLVD, VISALIA, CA 93277

DRAWING TITLE
SITE PLAN

PROJECT NO.
22-12498

DRAWING
C301.2

Blair, Church & Flynn
CONSULTING ENGINEERS
481 Clovis Avenue, Suite 200
Clovis, California 93612
Tel (559) 326-1400
Fax (559) 326-1800

Drawing: P:\223\223-02811SiteProductionDrawings\223281_si01.dwg, 9/22/2025 2:43:30 PM, mariaja
PM By: mariaja

PLOT DATE: 9/22/2025 2:43:30 PM

P:\223\223-0281\Site\ProductionDrawings\223281_hc01.dwg

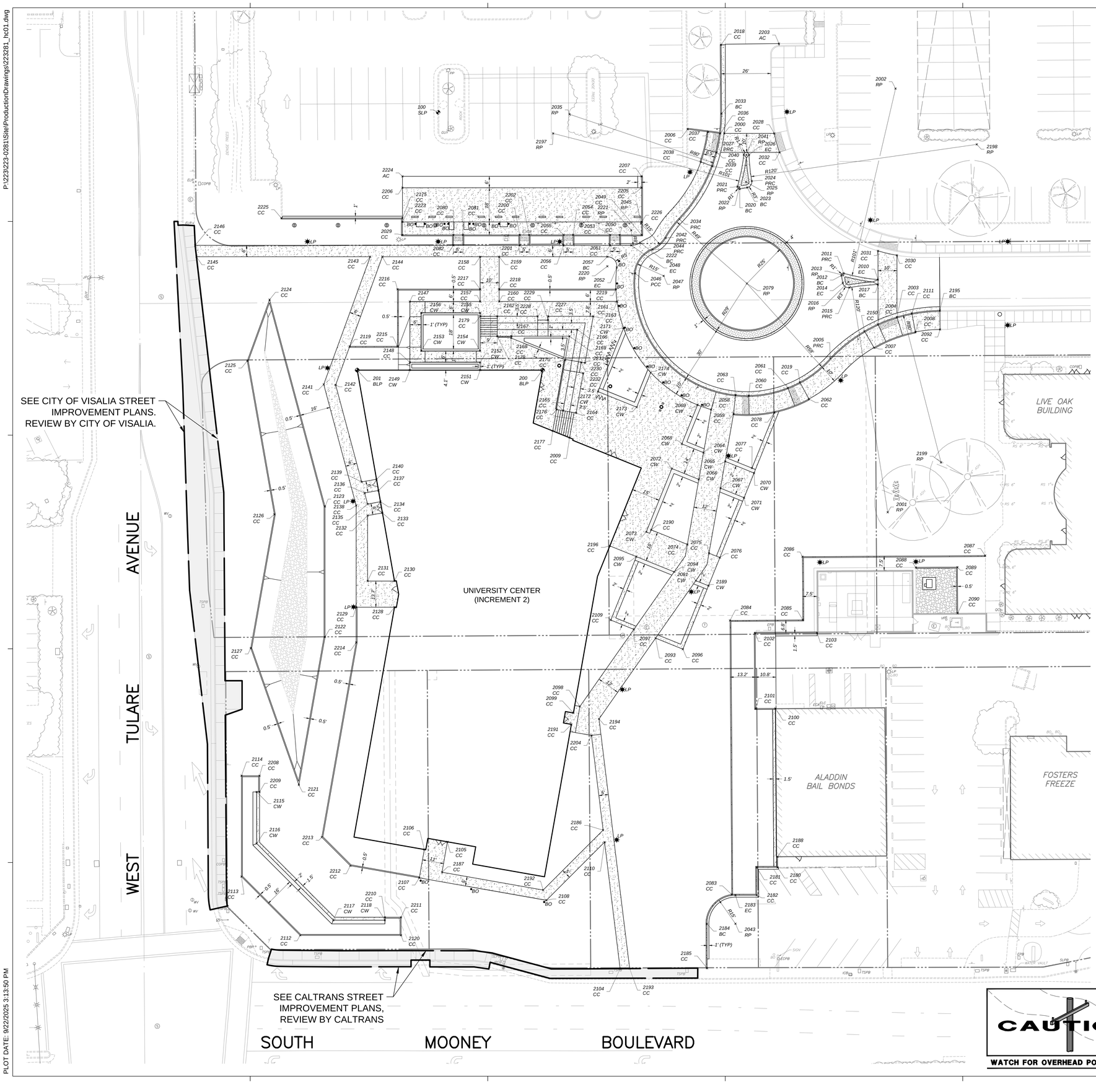

HORIZONTAL CONTROL LEGEND:

1000 LCP	LAYOUT COORDINATE POINT
100 SLP	SITE LAYOUT POINT
200 BLP	BUILDING LAYOUT POINT
AC	CORNER OF ASPHALT
BC	BEGIN CURVE
CC	CORNER CONCRETE
CW	CONCRETE WALL
EC	END CURVE
FP	FENCE POST
PCC	POINT OF COMPOUND CURVE
PRC	POINT OF REVERSE CURVE
RP	RADIUS POINT

GENERAL HORIZONTAL CONTROL NOTES:

1. SITE LAYOUT POINT 100 IS A CHISELED 'X' IN THE CONCRETE APPROXIMATELY 328' SOUTHWEST OF THE SOUTHWEST CORNER OF THE LIVE OAK BUILDING.

   SITE LAYOUT POINT 101 IS A CHISELED 'X' IN THE CONCRETE APPROXIMATELY 9' NORTHEAST OF THE NORTHEAST CORNER OF THE CEDAR BUILDING.

   SITE LAYOUT POINT 102 IS A CHISELED 'X' ON THE TOP OF THE NORTH CURB OF THE PARKING LOT APPROXIMATELY 69' NORTH OF THE LIVE OAK BUILDING.

   SITE LAYOUT POINT 103 IS A CHISELED 'X' IN THE CONCRETE APPROXIMATELY 33' SOUTHWEST OF THE SOUTHWEST CORNER OF THE HOME ECONOMICS BUILDING.

2. DIMENSIONS AND POINTS ARE TO CENTER OF FENCE POSTS, FACE OF BUILDINGS, TOP FACE OF CURB, OR EDGE OF CONCRETE, UNLESS SHOWN OTHERWISE.

CAUTION
WATCH FOR OVERHEAD POWER LINES

SCALE: 1"=20'
SCALE IN FEET

811 Know what's below. Call before you dig.

Blair, Church & Flynn
CONSULTING ENGINEERS
451 Clovis Avenue, Suite 200
Clovis, California 93612
Tel (559) 326-1400
Fax (559) 326-1500

IDENTIFICATION STAMP
DIV. OF THE STATE ARCHITECT
APP: 02-122821 INC: 2
REVIEWED FOR
SS ☑ FLS ☑ ACS ☑
DATE: 11/20/2025

Teter, Inc. expressly reserves its common law copyright and other property rights in these plans. This document, the ideas and designs incorporated herein, as an instrument of professional service, is not to be used in whole or in part, for any other project without prior written authorization.

MARK	DATE	DESCRIPTION
A	11/13/2025	DSA BACKCHECK

REGISTERED PROFESSIONAL ENGINEER
LANE R. BADER
No. 47033
CIVIL
STATE OF CALIFORNIA
9/2/2025
Date Signed:

TETER, INC.
FRESNO HEADQUARTERS
VISALIA I BAKERSFIELD I MODESTO I SAN LUIS OBISPO
ARCHITECTS ENGINEERS CONNECTED

VISALIA CAMPUS UNIVERSITY CENTER
COLLEGE OF THE SEQUIOAS
915 S. MOONEY BLVD
915 S MOONEY BLVD, VISALIA, CA 93277

DRAWING TITLE
HORIZONTAL CONTROL PLAN

PROJECT NO.
22-12498

DRAWING
C401.2

PLOT DATE: 9/22/2025 3:13:50 PM

P:\223\223-0281\Site\ProductionDrawings\223281_hc01.dwg

NORTHING EASTING TABLE

POINT	NORTHING	EASTING	ABV	DESCRIPTION
100	1999994.24	6468672.99	SLP	SITE LAYOUT POINT
101	2000751.86	6468820.29	SLP	SITE LAYOUT POINT
102	2000443.73	6468839.89	SLP	SITE LAYOUT POINT
200	2000049.17	6468808.72	BLP	BUILDING LAYOUT POINT
201	1999951.66	6468808.72	BLP	BUILDING LAYOUT POINT
2000	2000144.77	6468684.10	CC	CORNER CONCRETE
2001	2000230.84	6468883.55	RP	RADIUS POINT
2002	2000234.96	6468660.51	RP	RADIUS POINT
2003	2000235.71	6468780.78	CC	CORNER CONCRETE
2004	2000225.71	6468784.55	CC	CORNER CONCRETE
2005	2000200.62	6468802.54	PRC	POINT OF REVERSE CURVE
2006	2000125.54	6468681.92	CC	CORNER CONCRETE
2007	2000223.64	6468796.88	CC	CORNER CONCRETE
2008	2000245.43	6468788.65	CC	CORNER CONCRETE
2009	2000063.39	6468844.31	CC	CORNER CONCRETE
2010	2000225.71	6468761.09	EC	END CURVE
2011	2000207.67	6468757.76	PRC	POINT OF REVERSE CURVE
2012	2000206.42	6468758.91	BC	BEGIN CURVE
2013	2000207.40	6468758.72	RP	RADIUS POINT
2014	2000207.20	6468762.88	EC	END CURVE
2015	2000210.65	6468765.26	PRC	POINT OF REVERSE CURVE
2016	2000210.14	6468762.30	RP	RADIUS POINT
2017	2000225.71	6468763.66	BC	BEGIN CURVE
2018	2000143.15	6468637.45	CC	CORNER CONCRETE
2019	2000184.61	6468815.10	CC	CORNER CONCRETE
2020	2000152.91	6468713.38	BC	BEGIN CURVE
2021	2000151.76	6468712.12	PRC	POINT OF REVERSE CURVE
2022	2000152.72	6468712.39	RP	RADIUS POINT
2023	2000156.88	6468712.63	BC	BEGIN CURVE
2024	2000159.29	6468709.20	PRC	POINT OF REVERSE CURVE
2025	2000156.32	6468709.68	RP	RADIUS POINT
2026	2000157.85	6468695.42	EC	END CURVE
2027	2000155.10	6468695.33	PRC	POINT OF REVERSE CURVE
2028	2000171.11	6468684.10	CC	CORNER CONCRETE
2029	1999975.43	6468737.55	CC	CORNER CONCRETE
2030	2000235.71	6468748.26	CC	CORNER CONCRETE
2031	2000225.71	6468745.92	CC	CORNER CONCRETE
2032	2000173.94	6468694.10	CC	CORNER CONCRETE
2033	2000143.39	6468673.68	BC	BEGIN CURVE
2034	2000121.27	6468729.28	PRC	POINT OF REVERSE CURVE
2035	2000063.39	6468674.05	RP	RADIUS POINT
2036	2000142.76	6468684.10	CC	CORNER CONCRETE
2037	2000136.31	6468683.29	CC	CORNER CONCRETE
2038	2000132.48	6468699.14	CC	CORNER CONCRETE
2039	2000138.59	6468701.35	CC	CORNER CONCRETE
2040	2000140.84	6468694.10	CC	CORNER CONCRETE
2041	2000156.47	6468695.48	RP	RADIUS POINT
2042	2000113.96	6468739.19	PRC	POINT OF REVERSE CURVE
2043	2000150.70	6469100.15	RP	RADIUS POINT
2044	2000106.97	6468745.34	PRC	POINT OF REVERSE CURVE
2045	2000101.04	6468731.56	RP	RADIUS POINT
2046	2000097.97	6468757.76	PCC	POINT OF COMPOUND CURVE
2047	2000112.91	6468759.12	RP	RADIUS POINT
2048	2000095.85	6468743.05	EC	END CURVE
2049	2000101.35	6468737.55	CC	CORNER CONCRETE
2050	2000089.77	6468737.55	CC	CORNER CONCRETE
2051	2000084.77	6468743.05	CC	CORNER CONCRETE
2052	2000088.24	6468754.66	EC	END CURVE
2053	2000084.77	6468737.55	CC	CORNER CONCRETE
2054	2000065.27	6468737.55	CC	CORNER CONCRETE

POINT	NORTHING	EASTING	ABV	DESCRIPTION
2055	2000060.27	6468737.55	CC	CORNER CONCRETE
2056	2000060.27	6468743.05	CC	CORNER CONCRETE
2057	2000083.28	6468749.05	BC	BEGIN CURVE
2058	2000137.91	6468829.49	CC	CORNER CONCRETE
2059	2000149.70	6468831.74	CC	CORNER CONCRETE
2060	2000157.72	6468822.09	CC	CORNER CONCRETE
2061	2000178.31	6468818.01	CC	CORNER CONCRETE
2062	2000189.34	6468823.91	CC	CORNER CONCRETE
2063	2000150.72	6468821.80	CC	CORNER CONCRETE
2064	2000133.91	6468852.17	CW	CORNER OF WALL
2065	2000145.29	6468856.76	CW	CORNER OF WALL
2066	2000131.43	6468866.26	CW	CORNER OF WALL
2067	2000142.80	6468870.86	CW	CORNER OF WALL
2068	2000122.47	6468847.55	CW	CORNER OF WALL
2069	2000130.76	6468827.03	CW	CORNER OF WALL
2070	2000160.49	6468862.90	CW	CORNER OF WALL
2071	2000155.24	6468875.88	CW	CORNER OF WALL
2072	2000117.23	6468860.53	CW	CORNER OF WALL
2073	2000103.74	6468893.90	CW	CORNER OF WALL
2074	2000125.39	6468900.49	CC	CORNER CONCRETE
2075	2000136.77	6468905.09	CC	CORNER CONCRETE
2076	2000142.51	6468907.41	CC	CORNER CONCRETE
2077	2000159.38	6468860.30	CC	CORNER CONCRETE
2078	2000171.19	6468831.08	CC	CORNER CONCRETE
2079	2000156.72	6468763.10	RP	RADIUS POINT
2080	2000002.27	6468737.55	CC	CORNER CONCRETE
2081	2000007.27	6468737.55	CC	CORNER CONCRETE
2082	2000002.27	6468743.05	CC	CORNER CONCRETE
2083	2000148.75	6469084.78	CC	CORNER CONCRETE
2084	2000147.83	6468940.50	CC	CORNER CONCRETE
2085	2000186.17	6468940.27	CC	CORNER CONCRETE
2086	2000185.97	6468906.94	CC	CORNER CONCRETE
2087	2000282.14	6468906.36	CC	CORNER CONCRETE
2088	2000245.67	6468912.58	CC	CORNER CONCRETE
2089	2000267.53	6468912.45	CC	CORNER CONCRETE
2090	2000267.67	6468936.68	CC	CORNER CONCRETE
2091	2000129.85	6468919.55	CW	CORNER OF WALL
2092	2000258.38	6468787.34	CC	CORNER CONCRETE
2093	2000108.66	6468949.82	CC	CORNER CONCRETE
2094	2000118.43	6468914.94	CW	CORNER OF WALL
2095	2000098.50	6468906.88	CW	CORNER OF WALL
2096	2000123.03	6468955.62	CC	CORNER CONCRETE
2097	2000097.24	6468945.20	CC	CORNER CONCRETE
2098	2000068.83	6468985.77	CC	CORNER CONCRETE
2099	2000065.41	6468989.19	CC	CORNER CONCRETE
2100	2000171.74	6468986.80	CC	CORNER CONCRETE
2101	2000161.33	6468986.91	CC	CORNER CONCRETE
2102	2000161.07	6468947.26	CC	CORNER CONCRETE
2103	2000193.71	6468947.06	CC	CORNER CONCRETE
2104	2000090.00	6469123.83	CC	CORNER CONCRETE
2105	1999999.09	6469057.04	CC	CORNER CONCRETE
2106	1999986.96	6469061.08	CC	CORNER CONCRETE
2107	1999984.32	6469076.01	CC	CORNER CONCRETE
2108	2000051.20	6469087.80	CC	CORNER CONCRETE
2109	2000085.06	6468940.28	CC	CORNER CONCRETE
2110	2000081.82	6469057.18	CC	CORNER CONCRETE
2111	2000243.51	6468778.84	CC	CORNER CONCRETE
2112	1999921.59	6469106.25	CC	CORNER CONCRETE
2113	1999890.72	6469075.39	CC	CORNER CONCRETE
2114	1999890.72	6469022.26	CC	CORNER CONCRETE

POINT	NORTHING	EASTING	ABV	DESCRIPTION
2115	1999898.72	6469030.76	CW	CORNER OF WALL
2116	1999898.72	6469057.93	CW	CORNER OF WALL
2117	1999939.05	6469098.25	CW	CORNER OF WALL
2118	1999966.22	6469098.25	CW	CORNER OF WALL
2119	1999947.68	6468796.22	CC	CORNER CONCRETE
2120	1999974.72	6469106.25	CC	CORNER CONCRETE
2121	1999920.93	6469027.13	CC	CORNER CONCRETE
2122	1999934.68	6468949.17	CC	CORNER CONCRETE
2123	1999934.68	6468880.48	CC	CORNER CONCRETE
2124	1999905.51	6468771.62	CC	CORNER CONCRETE
2125	1999893.77	6468803.87	CC	CORNER CONCRETE
2126	1999908.02	6468884.65	CC	CORNER CONCRETE
2127	1999895.60	6468955.07	CC	CORNER CONCRETE
2128	1999971.25	6468933.52	CC	CORNER CONCRETE
2129	1999951.09	6468933.52	CC	CORNER CONCRETE
2130	1999971.24	6468919.77	CC	CORNER CONCRETE
2131	1999957.09	6468919.77	CC	CORNER CONCRETE
2132	1999957.09	6468885.29	CC	CORNER CONCRETE
2133	1999964.92	6468883.91	CC	CORNER CONCRETE
2134	1999963.87	6468878.00	CC	CORNER CONCRETE
2135	1999957.09	6468879.20	CC	CORNER CONCRETE
2136	1999955.40	6468872.90	CC	CORNER CONCRETE
2137	1999962.74	6468871.60	CC	CORNER CONCRETE
2138	1999951.09	6468879.99	CC	CORNER CONCRETE
2139	1999953.97	6468867.56	CC	CORNER CONCRETE
2140	1999961.79	6468866.18	CC	CORNER CONCRETE
2141	1999934.01	6468816.25	CC	CORNER CONCRETE
2142	1999940.29	6468816.52	CC	CORNER CONCRETE
2143	1999958.46	6468749.05	CC	CORNER CONCRETE
2144	1999964.85	6468749.05	CC	CORNER CONCRETE
2145	1999867.02	6468749.05	CC	CORNER CONCRETE
2146	1999866.32	6468743.05	CC	CORNER CONCRETE
2147	1999979.33	6468772.61	CC	CORNER CONCRETE
2148	1999979.33	6468804.61	CC	CORNER CONCRETE
2149	1999979.33	6468808.72	CW	CORNER OF WALL
2150	2000218.60	6468788.24	CC	CORNER CONCRETE
2151	2000016.33	6468808.72	CW	CORNER OF WALL
2152	2000016.33	6468804.61	CW	CORNER OF WALL
2153	1999985.33	6468798.61	CW	CORNER OF WALL
2154	2000016.33	6468798.61	CW	CORNER OF WALL
2155	2000016.33	6468778.61	CW	CORNER OF WALL
2156	1999985.33	6468778.61	CW	CORNER OF WALL
2157	2000016.33	6468772.61	CC	CORNER CONCRETE
2158	2000016.33	6468749.05	CC	CORNER CONCRETE
2159	2000026.33	6468749.05	CC	CORNER CONCRETE
2160	2000026.33	6468772.61	CC	CORNER CONCRETE
2161	2000088.38	6468772.61	CC	CORNER CONCRETE
2162	2000025.33	6468780.37	CC	CORNER CONCRETE
2163	2000075.85	6468780.37	CC	CORNER CONCRETE
2164	2000066.88	6468831.27	CC	CORNER CONCRETE
2165	2000059.99	6468830.05	CC	CORNER CONCRETE
2166	2000067.51	6468787.37	CC	CORNER CONCRETE
2167	2000032.82	6468790.87	CC	CORNER CONCRETE
2168	2000032.65	6468791.84	CC	CORNER CONCRETE
2169	2000063.34	6468790.87	CC	CORNER CONCRETE
2170	2000061.14	6468803.36	CC	CORNER CONCRETE
2171	2000091.84	6468786.57	CW	CORNER OF WALL
2172	2000078.33	6468820.00	CW	CORNER OF WALL
2173	2000098.73	6468828.24	CW	CORNER OF WALL
2174	2000106.10	6468809.99	CW	CORNER OF WALL

POINT	NORTHING	EASTING	ABV	DESCRIPTION
2175	1999975.43	6468728.70	CC	CORNER CONCRETE
2176	2000056.54	6468829.44	CC	CORNER CONCRETE
2177	2000054.55	6468840.74	CC	CORNER CONCRETE
2178	2000025.33	6468790.87	CC	CORNER CONCRETE
2179	2000016.33	6468780.37	CC	CORNER CONCRETE
2180	2000172.86	6469070.47	CC	CORNER CONCRETE
2181	2000161.86	6469070.47	CC	CORNER CONCRETE
2182	2000161.95	6469085.15	CC	CORNER CONCRETE
2183	2000150.68	6469085.15	EC	END CURVE
2184	2000135.70	6469100.23	BC	BEGIN CURVE
2185	2000135.79	6469123.60	CC	CORNER CONCRETE
2186	2000081.05	6469050.88	CC	CORNER CONCRETE
2187	1999996.27	6469073.05	CC	CORNER CONCRETE
2188	2000172.81	6469064.88	CC	CORNER CONCRETE
2189	2000136.51	6468922.24	CW	CORNER OF WALL
2190	2000106.35	6468892.80	CC	CORNER CONCRETE
2191	2000064.35	6468995.20	CC	CORNER CONCRETE
2192	2000049.50	6469082.43	CC	CORNER CONCRETE
2193	2000095.03	6469123.79	CC	CORNER CONCRETE
2194	2000078.89	6468992.33	CC	CORNER CONCRETE
2195	2000258.30	6468777.34	BC	BEGIN CURVE
2196	2000084.58	6468901.26	CC	CORNER CONCRETE
2197	2000054.72	6468684.10	RP	RADIUS POINT
2198	2000277.72	6468689.89	RP	RADIUS POINT
2199	2000258.91	6468857.34	RP	RADIUS POINT
2200	2000037.15	6468737.55	CC	CORNER CONCRETE
2201	2000037.15	6468743.05	CC	CORNER CONCRETE
2202	2000042.15	6468737.55	CC	CORNER CONCRETE
2203	2000173.61	6468636.84	AC	CORNER ASPHALT
2204	2000074.92	6469001.02	CC	CORNER CONCRETE
2205	2000101.27	6468712.70	CC	CORNER CONCRETE
2206	1999975.43	6468712.70	CC	CORNER CONCRETE
2207	2000101.26	6468706.67	CC	CORNER CONCRETE
2208	1999900.22	6469022.26	CC	CORNER CONCRETE
2209	1999900.22	6469030.76	CC	CORNER CONCRETE
2210	1999966.22	6469096.75	CC	CORNER CONCRETE
2211	1999974.72	6469096.75	CC	CORNER CONCRETE
2212	1999948.01	6469069.61	CC	CORNER CONCRETE
2213	1999933.01	6469054.61	CC	CORNER CONCRETE
2214	1999951.09	6468952.06	CC	CORNER CONCRETE
2215	1999972.83	6468796.22	CC	CORNER CONCRETE
2216	1999972.83	6468766.11	CC	CORNER CONCRETE
2217	2000016.33	6468766.11	CC	CORNER CONCRETE
2218	2000026.33	6468766.11	CC	CORNER CONCRETE
2219	2000087.79	6468766.11	CC	CORNER CONCRETE
2220	2000083.28	6468754.05	RP	RADIUS POINT
2221	2000095.85	6468735.05	RP	RADIUS POINT
2222	2000100.47	6468741.58	BC	BEGIN CURVE
2223	1999975.43	6468730.70	CC	CORNER CONCRETE
2224	1999975.43	6468706.70	AC	CORNER ASPHALT
2225	1999911.70	6468728.70	CC	CORNER CONCRETE
2226	2000101.33	6468730.70	CC	CORNER CONCRETE
2227	2000052.08	6468780.37	CC	CORNER CONCRETE
2228	2000046.58	6468780.37	CC	CORNER CONCRETE
2229	2000052.08	6468782.37	CC	CORNER CONCRETE
2230	2000069.53	6468804.57	CC	CORNER CONCRETE
2231	2000071.52	6468804.92	CC	CORNER CONCRETE
2232	2000070.57	6468810.34	CC	CORNER CONCRETE

PLOT DATE: 9/22/2025 2:45:38 PM

IDENTIFICATION STAMP
DIV. OF THE STATE ARCHITECT
APP: 02-122821 INC: 2
REVIEWED FOR
SS ☑ FLS ☑ ACS ☑
DATE: 11/20/2025

Teter, Inc. expressly reserves its common law copyright and other property rights in these plans. This document, the ideas and designs incorporated herein, as an instrument of professional service, is not to be used in whole or in part, for any other project without prior written authorization.

MARK	DATE	DESCRIPTION
A	11/13/2025	DSA BACKCHECK

REGISTERED PROFESSIONAL ENGINEER
LANE R. BADER
No. 47,033
CIVIL
STATE OF CALIFORNIA
9/2/2025
Date Signed:

TETER, INC.
FRESNO HEADQUARTERS
VISALIA I BAKERSFIELD I MODESTO I SAN LUIS OBISPO
ARCHITECTS ENGINEERS CONNECTED
TETER

VISALIA CAMPUS UNIVERSITY CENTER
COLLEGE OF THE SEQUIOAS
915 S. MOONEY BLVD
915 S MOONEY BLVD, VISALIA, CA 93277

DRAWING TITLE
HORIZONTAL CONTROL PLAN TABLE

Blair, Church & Flynn
CONSULTING ENGINEERS
451 Clovis Avenue, Suite 200
Clovis, California 93612
Tel (559) 326-1400
Fax (559) 326-1500

PROJECT NO.
22-12498

DRAWING
C402.2

Drawing: P:\223\223-0281\Site\ProductionDrawings\223281_hc01.dwg; C402.2 - BCF.CTB
Plot by: manaya Sep 22, 2025 - 2:45pm

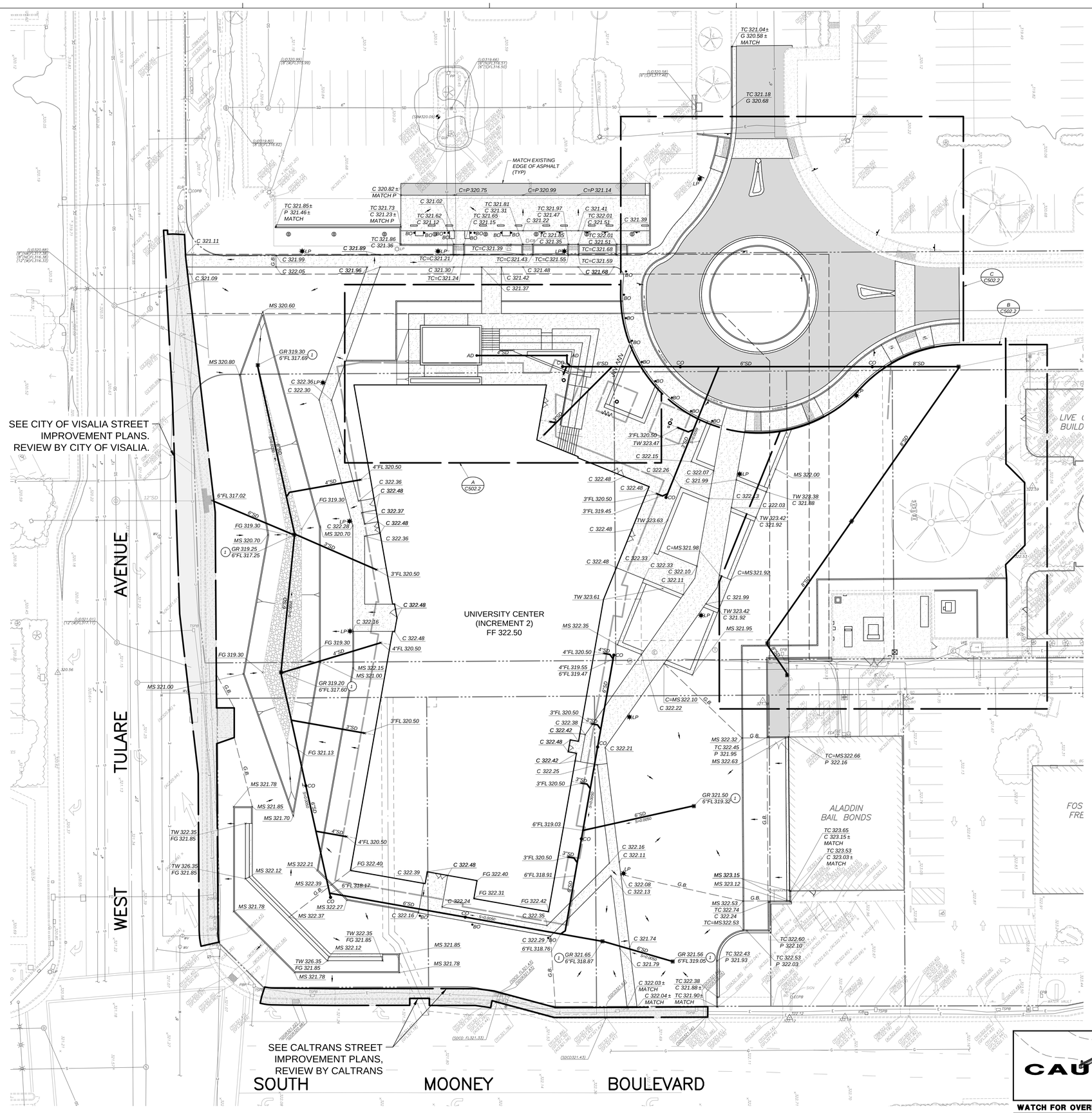
SEE CITY OF VISALIA STREET IMPROVEMENT PLANS. REVIEW BY CITY OF VISALIA.
SEE CALTRANS STREET IMPROVEMENT PLANS, REVIEW BY CALTRANS
WEST TULARE AVENUE
SOUTH MOONEY BOULEVARD
UNIVERSITY CENTER (INCREMENT 2) FF 322.50
ALADDIN BAIL BONDS
MATCH EXISTING EDGE OF ASPHALT (TYP)
TC 321.04± G 320.58 ± MATCH
TC 321.18 G 320.68
C 320.82 ± MATCH P
TC 321.85± P 321.46 ± MATCH
C=P 320.75
C=P 320.99
C=P 321.14
MS 320.60
MS 320.80
MS 322.00
MS 321.00
MS 322.32
MS 321.95
MS 321.78
MS 321.85
MS 321.70
MS 322.21
MS 322.12
MS 322.39
MS 322.27
MS 322.37
MS 323.15
MS 323.12
MS 322.63
MS 321.92
MS 322.35
MS 321.98
MS 322.15
MS 321.00
GR 319.30 6"FL 317.69
GR 319.25 6"FL 317.25
GR 319.20 6"FL 317.60
GR 321.50 6"FL 319.32
GR 321.65 6"FL 318.87
GR 321.56 6"FL 319.05
TC=MS322.66 P 322.16
TC=MS322.53
TC 322.60 P 322.10
TC 322.53 P 322.03
TC 322.43 P 321.93
TC 322.38 C 321.88 ± MATCH
C 322.03 ± MATCH
C 322.04 ± MATCH
TC 321.90 ± MATCH
TC 323.65 C 323.15 ± MATCH
TC 323.53 C 323.03 ± MATCH
TW 328.38 C 321.88
TW 323.42 C 321.92
TW 323.63
TW 323.47
TW 322.35 FG 321.85
TW 326.35 FG 321.85
TW 326.35 FG 321.85
FG 319.30
FG 321.13
FG 322.40
FG 322.31
FG 322.42
6"FL 318.91
6"FL 318.17
6"FL319.03
3"FL 320.50
4"FL 320.50
4"FL319.55 6"FL319.47
3"FL320.50
6"FL 317.02
C 321.11
C 321.09
C 321.99
C 322.05
C 321.96
C 321.89
C 321.30 TC=C321.24
C 321.21 TC=C321.43
C 321.48
C 321.42
C 321.37
C 321.68
C 321.59
C 321.39
C 321.02
C 321.12
C 321.62
C 321.65
C 321.15
C 321.81
C 321.31
C 321.97
C 321.47
C 321.22
C 321.41
C 322.01
C 321.51
C 321.39
C 321.35
C 321.55
C 321.86
C 321.36
C 322.36 LP
C 322.30
C 322.48
C 322.37
C 322.28
C 322.16
C 322.26
C 322.07
C 321.99
C 322.03
C 322.33
C 322.10
C 322.11
C 322.22
C 322.38
C 322.42
C 322.25
C 322.21
C 322.16
C 322.11
C 322.08
C 322.13
C 322.24
C 322.35
C 322.29
C 321.74
C 321.79
C 322.15
C 322.24
C 322.39
C 322.36
C 322.48
C 322.33
C 322.48
C 322.48
C 322.48

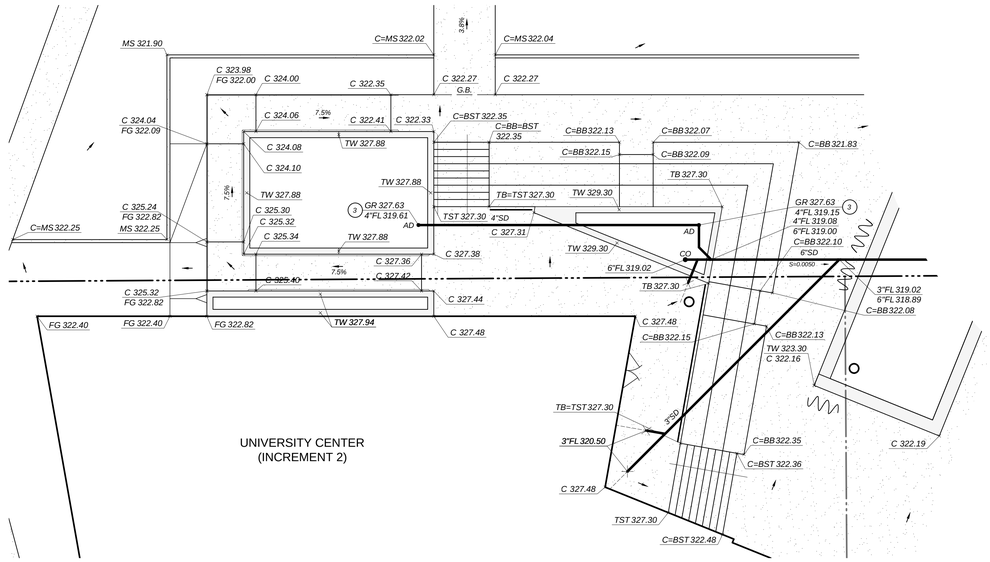

A
C502.2

ENLARGEMENT

SCALE: 1"=10'

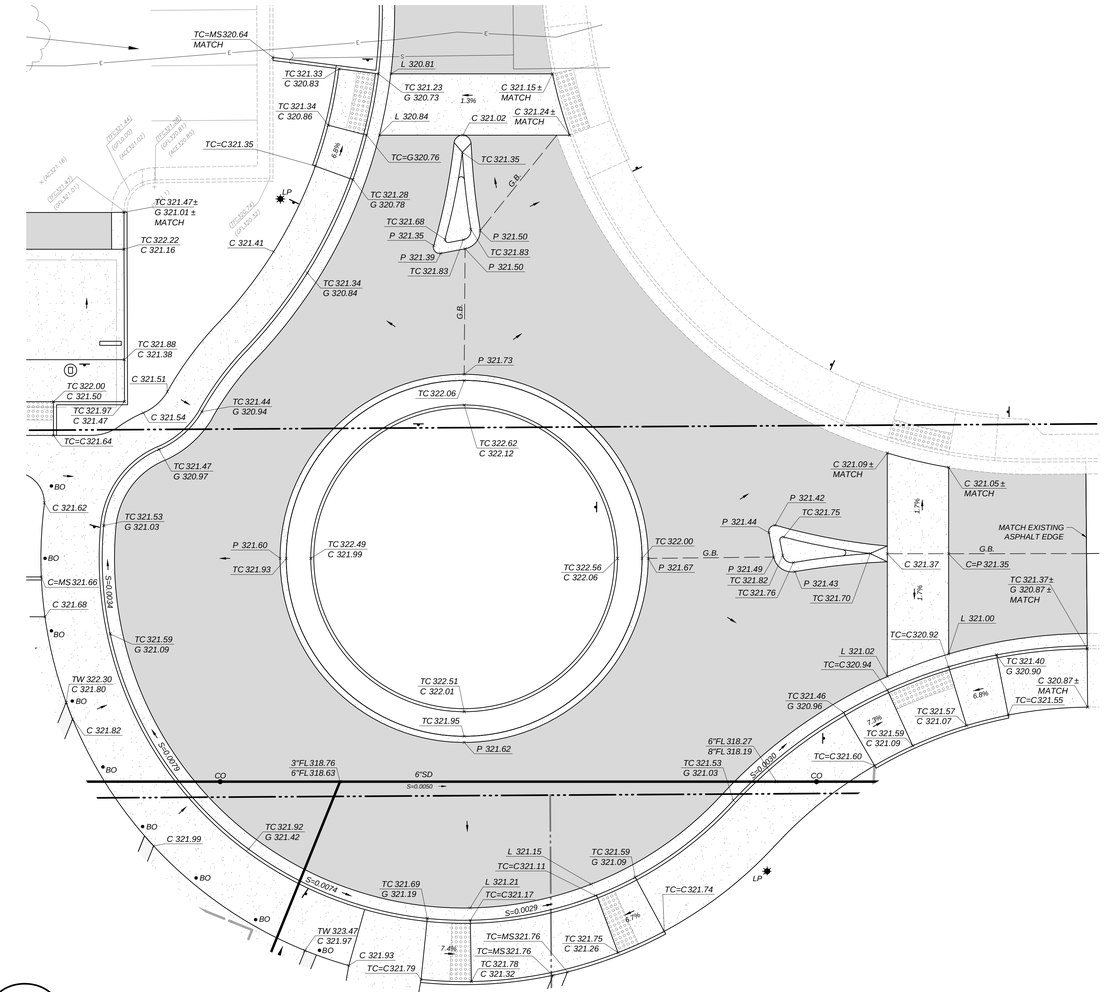

C
C502.2

ENLARGEMENT

SCALE: 1"=10'

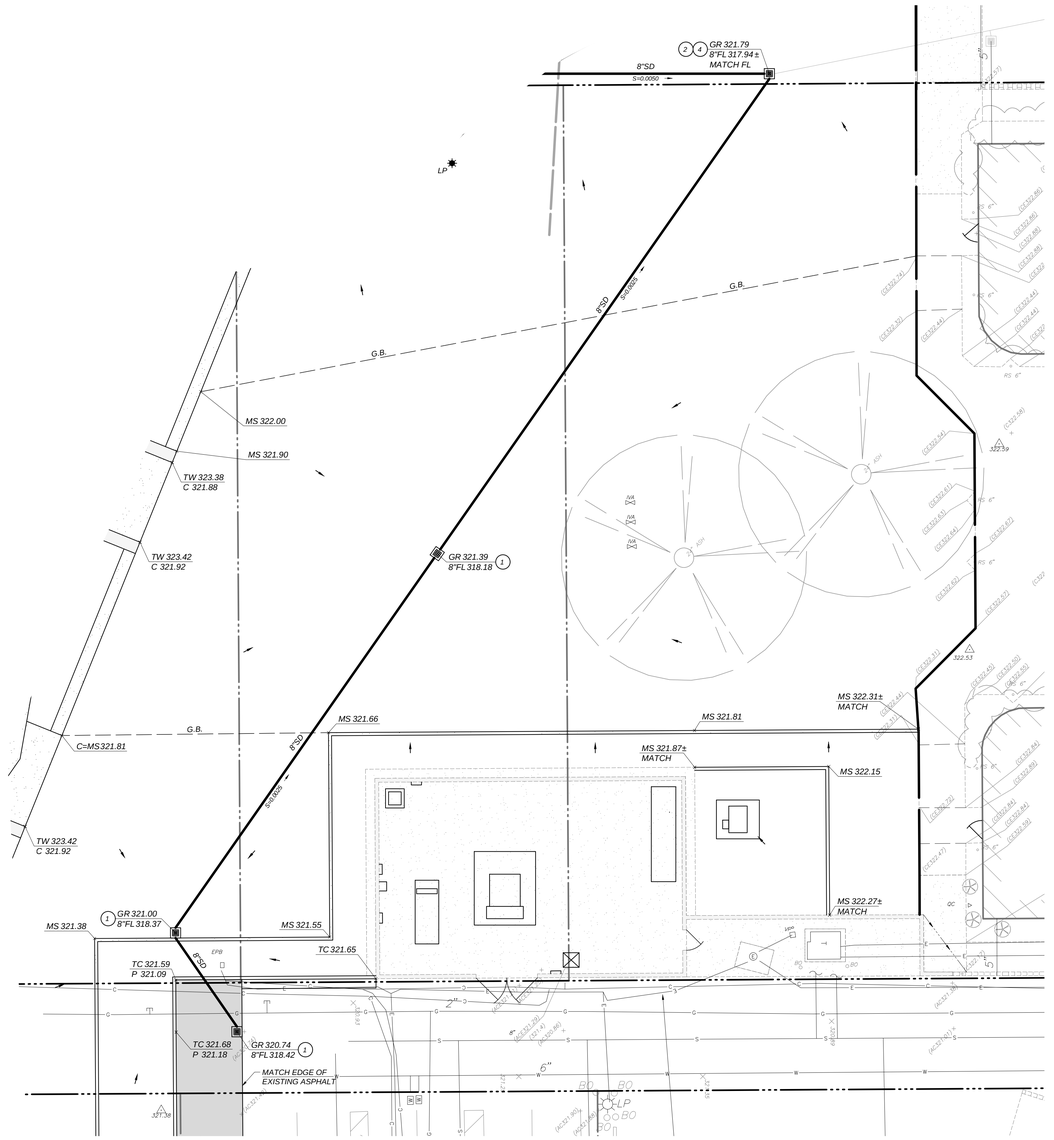

B
C502.2

ENLARGEMENT

SCALE: 1"=10'

MARK	DATE	DESCRIPTION
A	11/13/2025	DSA BACKCHECK

IDENTIFICATION STAMP
DIV. OF THE STATE ARCHITECT
APP: 02-122821 INC: 2
REVIEWED FOR
SS ☑ FLS ☑ ACS ☑
DATE: 11/20/2025

Teter, Inc. expressly reserves its common law copyright and other property rights in these plans. This document, the ideas and designs incorporated herein, as an instrument of professional service, is not to be used in whole or in part, for any other project without prior written authorization.

REGISTERED PROFESSIONAL ENGINEER
CLAIRE R. BARTLETT
No. 41705
CIVIL
STATE OF CALIFORNIA
9/2/2025
Date Signed:

TETER, INC.
ARCHITECTS ENGINEERS CONSULTANTS
FRESNO HEADQUARTERS
VISALIA | BAKERSFIELD | MODESTO | SAN LUIS OBISPO

VISALIA CAMPUS UNIVERSITY CENTER
COLLEGE OF THE SEQUOIAS
915 S. MOONEY BLVD
915 S MOONEY BLVD, VISALIA, CA 93277

DRAWING TITLE
GRADING AND DRAINAGE ENLARGEMENTS PLAN

PROJECT NO.
22-12498

DRAWING
C502.2

CAUTION
WATCH FOR OVERHEAD POWER LINES
811
Know what's below.
Call before you dig.

Blair, Church & Flynn
CONSULTING ENGINEERS
451 Clovis Avenue, Suite 200
Clovis, California 93612
Tel (559) 326-1400
Fax (559) 326-1600

Drawing: P:\223\223-02811\Site\ProductionDrawings\223281_gr02.2.dwg
Plot By: kalvarez Sep 22, 2025 - 3:39pm

PLOT DATE: 9/22/2025 3:39:10 PM

P:\223\223-0281\SiteProductionDrawings\223281_ut01.dwg

PLOT DATE: 9/22/2025 3:40:38 PM

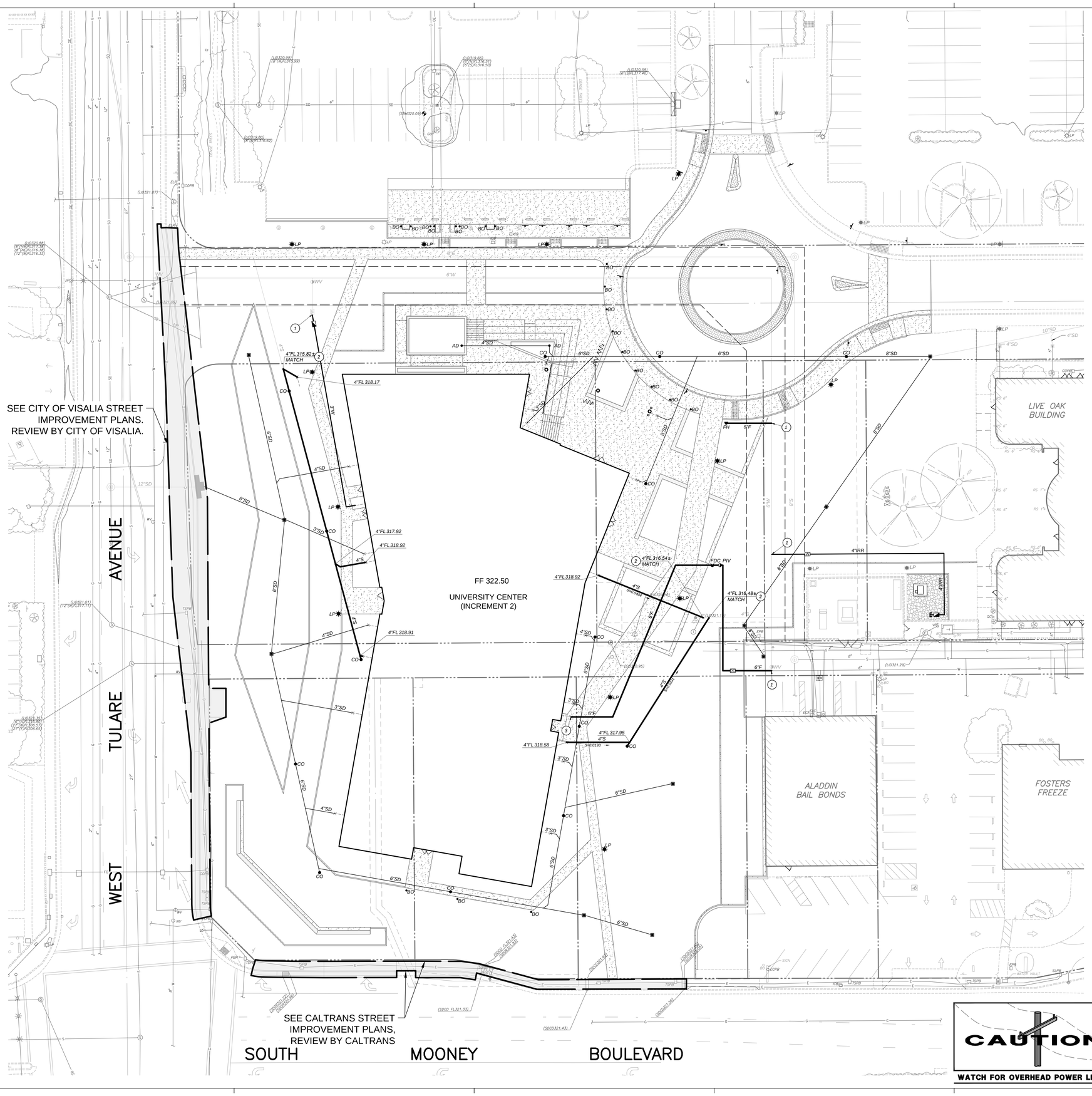

UTILITY LEGEND:

S	SEWER MAIN, SIZE AS NOTED ON PLANS. PIPE BEDDING AND BACKFILL PER DETAIL [I/X101.2]
W	WATER MAIN, SIZE AS NOTED ON PLANS, MIN. 30" COVER. PIPE BEDDING AND BACKFILL PER DETAIL [I/X101.2]
F	FIRE MAIN, SIZE AS NOTED ON PLANS, MIN. 42" COVER. THRUST BLOCKS PER DETAIL [K/X102.2]. PIPE BEDDING AND BACKFILL PER DETAIL [I/X101.2].
IRR	IRRIGATION MAIN, SIZE AND FITTINGS AS NOTED ON PLANS. THRUST BLOCKS PER DETAIL [K/X102.2]. PIPE BEDDING AND BACKFILL PER DETAIL [I/X101.2].
SD	STORM DRAIN PIPE, SEE GRADING PLAN
FF	FINISHED FLOOR
FL	FLOWLINE
	BACKFLOW PREVENTER PER DETAIL [A/X103.2]
CO	SEWER CLEANOUT PER DETAIL [H/X102.2]
DC	DOUBLE DETECTOR CHECK VALVE PER DETAIL [B/X103.2]
FDC	FIRE DEPARTMENT CONNECTION PER DETAIL [J/X102.2]
FH	FIRE HYDRANT ASSEMBLY PER DETAIL [C/X103.2]
PIV	POST INDICATOR VALVE PER DETAIL [J/X102.2]
RD	ROOF DRAIN; SEE PLUMBING PLANS
WV	WATER VALVE PER DETAIL [I/X102.2]
W	WATER METER, FURNISHED AND INSTALLED BY CAL-WATER
	POINT OF CONNECTION TO EXISTING OR PROPOSED UTILITY, COORDINATE WITH PLUMBING OR FIRE PROTECTION PLANS PRIOR TO CONNECTION.
S=0.0050	PIPE SLOPE AND DIRECTION OF FLOW
1	CONNECT TO EXISTING CALIFORNIA WATER SERVICE MAIN WITH WATER-TIGHT CONNECTION. VERIFY SIZE, DEPTH, AND LOCATION.
2	CONNECT TO EXISTING SEWER LINE WITH WATER-TIGHT CONNECTION. VERIFY SIZE, DEPTH, AND LOCATION.
3	FOR CONTINUATION SEE FIRE PROTECTION PLAN FP800.2

GENERAL SITE UTILITY NOTES:

1. AS FIRST ORDER OF WORK, CONTRACTOR SHALL POTHOLE EXISTING UTILITIES AND NOTIFY ENGINEER IMMEDIATELY OF LOCATIONS, SIZE AND DEPTH.
2. THE CONTRACTOR SHALL FIELD VERIFY THE EXACT LOCATION, SIZE, DEPTH, AND TYPE OF ALL EXISTING UTILITIES AND INTERFERENCES SITUATED ALONG THE ROUTE OF THE PROPOSED CONSTRUCTION PRIOR TO COMMENCEMENT OF EXCAVATION, FABRICATION, AND INSTALLATION. THE CONTRACTOR SHALL CONSTRUCT ALL IMPROVEMENTS IN SUCH A MANNER AS WILL PROTECT ALL EXISTING UNDERGROUND UTILITIES AND, IN THE EVENT OF ANY CONFLICTS, SHALL NOTIFY THE ENGINEER BEFORE PROCEEDING.
3. SEE IRRIGATION PLANS FOR PROPOSED IRRIGATION PIPE ALIGNMENT.
4. COORDINATE EXACT POINTS OF CONNECTION TO BUILDING PLUMBING AND NOTIFY THE ENGINEER OF ANY CONFLICT SO THAT ADJUSTMENTS CAN BE MADE IF NEEDED.
5. SAWCUT EXISTING CONCRETE IMPROVEMENTS AS NECESSARY TO INSTALL NEW WATER OR SEWER IMPROVEMENTS. CONSTRUCT NEW CONCRETE IMPROVEMENTS TO MATCH ADJACENT CONCRETE IMPROVEMENTS AND JOIN TOGETHER WITH DOWEL BARS PER DETAIL [D/X101.2]
6. INSTALLATION, TYPE, AND MANUFACTURER'S MODELS OF DOMESTIC WATER METERS, DRAIN INLETS/OUTLETS AND OTHER APPURTENANCES OF SITE UTILITY SYSTEMS SHALL BE DONE IN STRICT ACCORDANCE WITH GOVERNING AUTHORITY REQUIREMENTS.
7. LAYOUT OF MATERIALS, EQUIPMENT AND SYSTEMS IS GENERALLY DIAGRAMMATIC UNLESS SPECIFICALLY DIMENSIONED. SOME WORK MAY BE SHOWN OFFSET FOR CLARITY. THE ACTUAL LOCATIONS OF ALL MATERIALS, PIPING, FIXTURES, EQUIPMENT, SUPPORTS, ETC., SHALL BE CAREFULLY PLANNED PRIOR TO INSTALLATION OF ANY WORK TO AVOID ALL INTERFERENCES WITH EACH OTHER OR WITH STRUCTURAL, ELECTRICAL, PLUMBING AND MECHANICAL, ARCHITECTURAL OR ANY OTHER ELEMENTS. ALL CONFLICTS SHALL BE CALLED TO THE ATTENTION OF THE ARCHITECT AND THE ENGINEER PRIOR TO THE INSTALLATION OF ANY WORK OR THE ORDERING OF ANY EQUIPMENT.
8. ANY INSPECTION TO BE MADE BY THE AUTHORITY HAVING JURISDICTION SHALL REQUIRE A MINIMUM OF 24 HOUR NOTICE.
9. PURITY TESTS ARE REQUIRED ON ALL WATER SYSTEM INSTALLATIONS. CONTRACTOR TO COORDINATE WITH THE AUTHORITY HAVING JURISDICTION.
10. IF THE TOP OF THE STEM OF ANY WATER GATE VALVE IS DEEPER THAN 4' BELOW FINISHED PAVEMENT GRADE, THE CONTRACTOR SHALL INSTALL A STEM EXTENSION SO THAT THE TOP OF THE STEM, WITH EXTENSION, SHALL BE NO DEEPER THAN 4' NOR SHALLOWER THAN 2' FROM FINISHED GRADE.
11. BACKFILL UTILITY TRENCHES PER DETAIL [I/X101.2]
12. ADJUST EXISTING UTILITY LIDS TO FINISHED GRADE PER UTILITY COMPANY STANDARDS AND DETAIL [J/X101.2] AND INSTALL TRAFFIC RATED LIDS WHERE LOCATED IN A TRAFFIC AREA.

IDENTIFICATION STAMP
DIV. OF THE STATE ARCHITECT
APP: 02-122821 INC: 2
REVIEWED FOR
SS ☑ FLS ☑ ACS ☑
DATE: 11/20/2025

Teter, Inc. expressly reserves its common law copyright and other property rights in these plans. This document, the ideas and designs incorporated herein, as an instrument of professional service, is not to be used in whole or in part, for any other project without prior written authorization.

MARK	DATE	DESCRIPTION
A	11/13/2025	DSA BACKCHECK

REGISTERED PROFESSIONAL ENGINEER
CLAIRE R. BAILEY
No. 41703
CIVIL
STATE OF CALIFORNIA
9/2/2025
Date Signed:

TETER, INC.
FRESNO HEADQUARTERS
VISALIA | BAKERSFIELD | MODESTO | SAN LUIS OBISPO
ARCHITECTS ENGINEERS CONNECTED
TETER

VISALIA CAMPUS UNIVERSITY CENTER
COLLEGE OF THE SEQUOIAS
915 S. MOONEY BLVD
915 S. MOONEY BLVD, VISALIA, CA 93277

DRAWING TITLE
UTILITY PLAN

PROJECT NO.
22-12498

DRAWING
C601.2

Blair, Church & Flynn
CONSULTING ENGINEERS
481 Clovis Avenue, Suite 200
Clovis, California 93612
Tel (559) 326-1400
Fax (559) 326-1500

Drawing: P:\223\223-0281\SiteProductionDrawings\223281_ut01.dwg, 11x17, C601.2 - ACT-CTR
Plot Date: 9/22/2025 - 3:40:38 PM

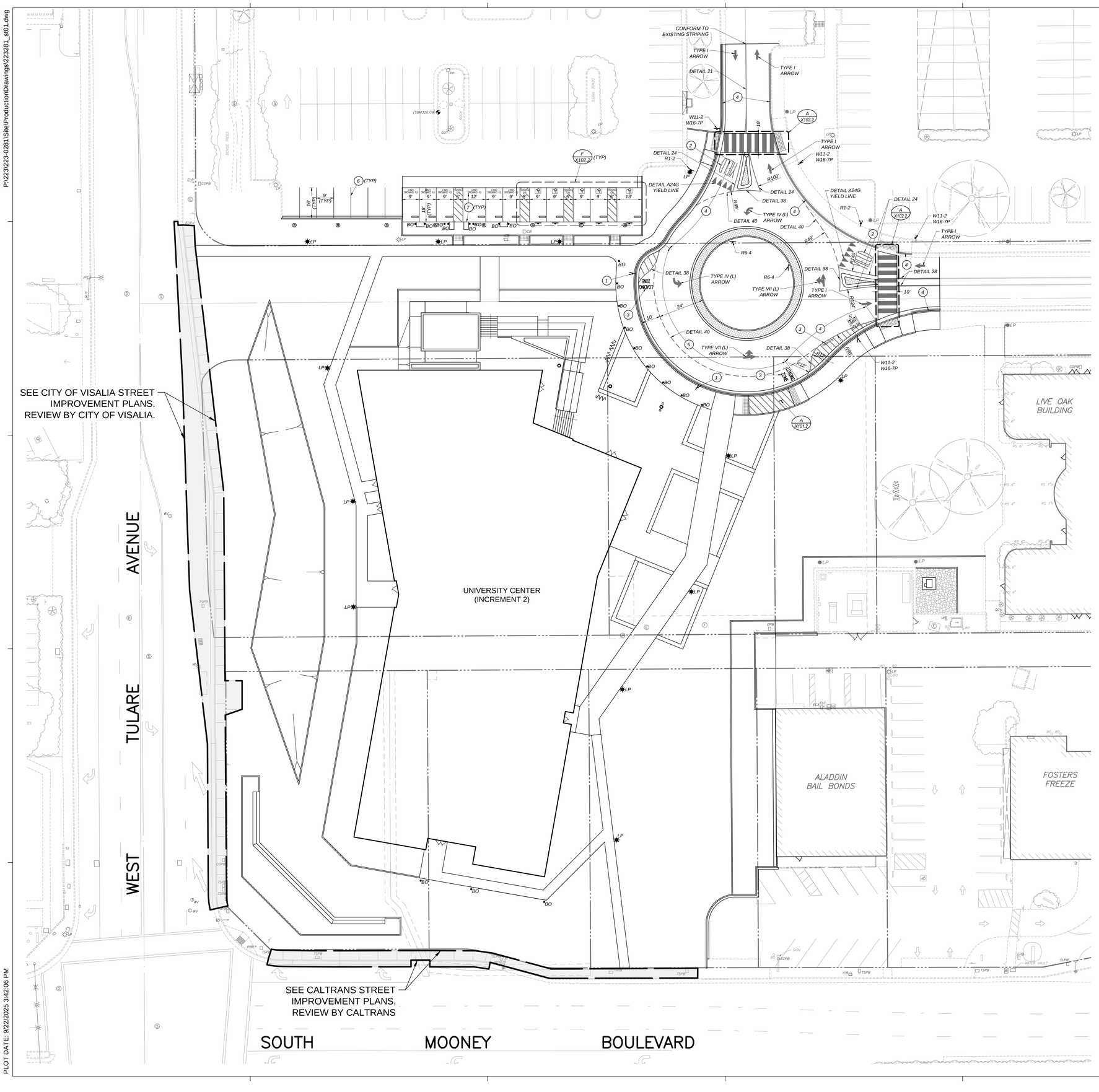

SIGNAGE AND STRIPING LEGEND:

1. 12"X18" 15 MIN LOADING/UNLOADING ZONE SIGN, SMARTSIGN PART NO. K-5702, COLOR GREEN, SIGN POST AND FOOTING PER DETAIL [P/X101.2]
2. 8' HIGH PAVEMENT MARKING WORDING
3. 12" HIGH PAVEMENT MARKING WORDING
4. PAINT TOP AND FACE OF CURB RED WITH 4" HIGH WHITE LETTERING, "NO PARKING - FIRE LANE", AT 30' ON CENTER. WHERE NO CURB EXISTS, PAINT PAVEMENT.
5. PAINT TOP AND FACE OF CURB GREEN WITH 4" HIGH WHITE LETTERING, "LOADING ZONE - 20 MIN", AT 30' ON CENTER. WHERE NO CURB EXISTS, PAINT PAVEMENT.
6. PAINT 4" WIDE WHITE LINE
7. SEE ARCH PLANS FOR EVCS STRIPING AND SIGNAGE

LIMITS OF PAINTED CURB

SIGNAGE AND STRIPING GENERAL NOTES:

1. ALL WORK INDICATED ON THESE PLANS SHALL BE PERFORMED IN ACCORDANCE WITH THE LATEST EDITION OF THE STANDARD SPECIFICATIONS AND STANDARD PLANS OF THE CALIFORNIA DEPARTMENT OF TRANSPORTATION (CALTRANS), AND LATEST CALIFORNIA MUTCD (CA MUTCD).
2. PAINT APPLICATION SHALL BE DONE IN ACCORDANCE WITH THE CALTRANS STANDARD PLANS AND SPECIFICATIONS.
3. TRAFFIC SIGNS AND MARKERS MUST COMPLY WITH THE CA MUTCD, CALIFONRIA SIGN SPECIFICATIONS, AND THE FHWA PUBLICATION STANDARD HIGHWAY SIGNS AND MARKINGS ALONG WITH THE CALTRANS STANDARD SPECIFCATIONS.
4. ALL EXISTING AND PROPOSED SIGNS SHALL HAVE 7' CLEARANCE FROM FINISH SURFACE PER THE CA MUTCD.
5. SIGN POST AND FOOTING PER DETAIL [P/X101.2]

IDENTIFICATION STAMP
DIV. OF THE STATE ARCHITECT
APP: 02-122821 INC: 2
REVIEWED FOR
SS ☑ FLS ☑ ACS ☑
DATE: 11/20/2025

Teter, Inc. expressly reserves its common law copyright and other property rights in these plans. This document, the ideas and designs incorporated herein, as an instrument of professional service, is not to be used in whole or in part, for any other project without prior written authorization.

MARK	DATE	DESCRIPTION
A	11/13/2025	DSA BACKCHECK

REGISTERED PROFESSIONAL ENGINEER
LANE R. BADER
No. 47033
CIVIL
STATE OF CALIFORNIA
9/2/2025
Date Signed:

TETER, INC.
FRESNO HEADQUARTERS
VISALIA | BAKERSFIELD | MODESTO | SAN LUIS OBISPO
ARCHITECTS ENGINEERS CONNECTED

VISALIA CAMPUS UNIVERSITY CENTER
COLLEGE OF THE SEQUIOAS
915 S. MOONEY BLVD
915 S MOONEY BLVD, VISALIA, CA 93277

DRAWING TITLE
SIGNAGE AND STRIPING PLAN

PROJECT NO.
22-12498

DRAWING
C701.2

811 Know what's below. Call before you dig.

Blair, Church & Flynn
CONSULTING ENGINEERS
451 Clovis Avenue, Suite 200
Clovis, California 93612
Tel (559) 326-1400
Fax (559) 326-1500

P:\223\223-0281\Site\ProductionDrawings\223281_st01.dwg

PLOT DATE: 9/22/2025 3:42:06 PM

P:\223\223-02811\Site\ProductionDrawings\223281_dt02.dwg

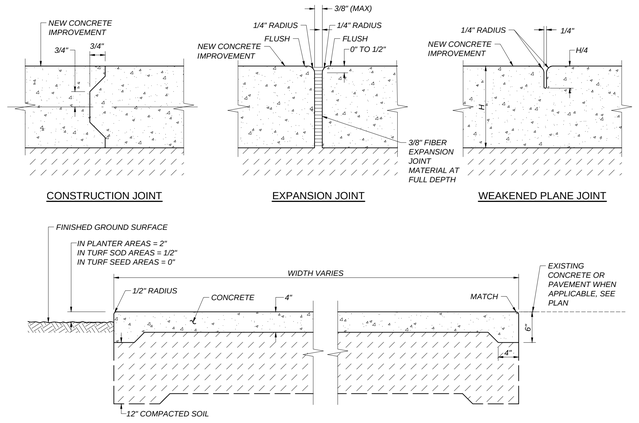

A X101.2 CONCRETE WALK
NOT TO SCALE

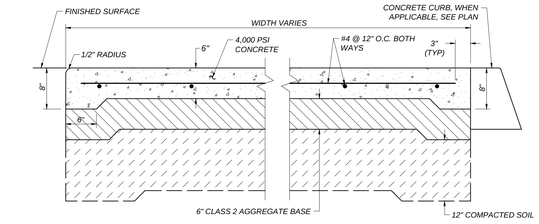

B X101.2 HEAVY DUTY CONCRETE PAVEMENT STRUCTURAL SECTION
NOT TO SCALE

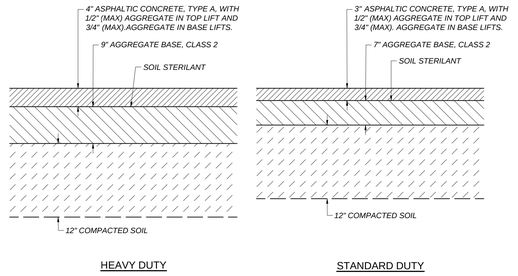

C X101.2 ASPHALT CONCRETE PAVEMENT STRUCTURAL SECTIONS
NOT TO SCALE

NOTES:

1. *DRILL HOLE 1/8" LARGER THAN DOWEL DIAMETER.*
2. *CLEAN HOLE THOROUGHLY OF DUST AND FRAGMENTS WITH WATER, WIRE BRUSH, AND AIR.*
3. *FILL HOLE WITH APPROVED ADHESIVE BEFORE INSERTING DOWEL INTO EXISTING CONCRETE.*
4. *WHERE SMOOTH DOWEL IS USED, APPLY BOND BREAKER TO SIDE IN NEW CONCRETE AS REQUIRED TO ALLOW HORIZONTAL MOVEMENT OF CONCRETE.*
5. *WHERE DEFORMED REBAR DOWEL IS USED, PROVIDE APPROVED WRAP ON SIDE IN NEW CONCRETE AS REQUIRED TO ALLOW HORIZONTAL MOVEMENT OF CONCRETE.*

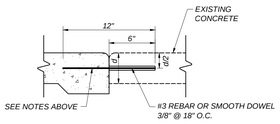

D X101.2 DOWEL BAR
NOT TO SCALE

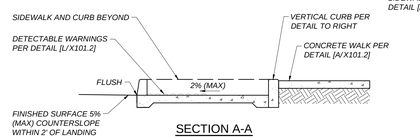

SECTION A-A

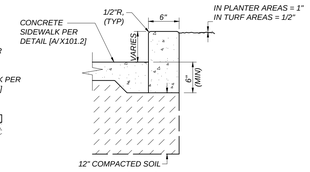

VERTICAL CURB

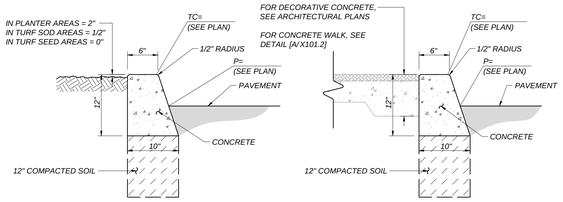

E X101.2 CONCRETE CURB
NOT TO SCALE

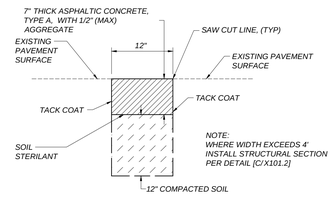

F X101.2 ASPHALT CONCRETE PLUG
NOT TO SCALE

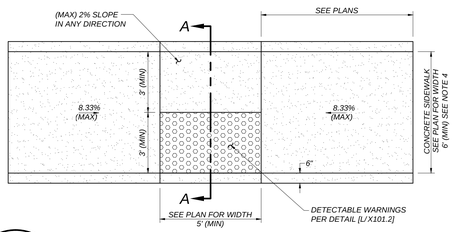

G X101.2 ACCESSIBLE RAMP SECTION
NOT TO SCALE

NOTES:

1. *RAMP LONGITUDINAL SLOPES SHALL NOT EXCEED 8.33%. RAMP CROSS SLOPES SHALL NOT EXCEED 2%.*
2. *LANDINGS AT THE TOP AND BOTTOM OF ACCESSIBLE RAMPS SHALL NOT EXCEED 2% IN ANY DIRECTION.*
3. *GUTTERS AND ROAD SURFACES DIRECTLY ADJACENT TO AND WITHIN 2 FEET OF A CURB RAMP MAY HAVE A COUNTER SLOPE NOT EXCEEDING 5%.*
4. *WHERE IT IS TECHNICALLY INFEASIBLE TO PROVIDE A MINIMUM 72 INCHES WIDE TURNING SPACE, AS MEASURED PERPENDICULAR THE CURB, THE DEPTH OF DETECTABLE WARNINGS MAY BE REDUCED TO 24 INCHES MINIMUM. IF THIS CONDITION IS FOUND, IT SHALL BE SUBMITTED TO DSA AS A CCD FOR APPROVAL.*

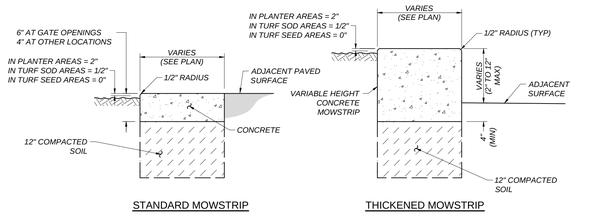

H X101.2 CONCRETE MOWSTRIP
NOT TO SCALE

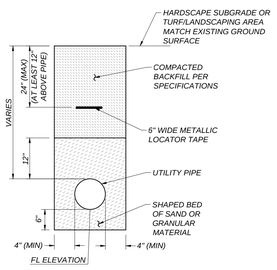

I X101.2 TRENCH DETAIL FOR UTILITY LINES
NOT TO SCALE

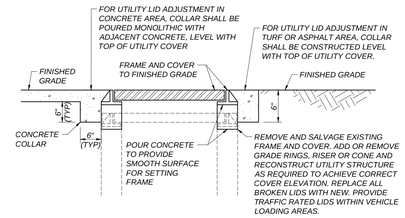

J X101.2 ADJUST UTILITY LID
NOT TO SCALE

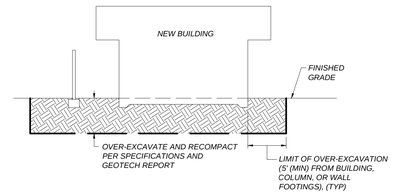

K X101.2 OVER-EXCAVATION
NOT TO SCALE

NOTES:

1. *THE DETECTABLE WARNING SURFACE SHALL BE YELLOW AND APPROXIMATE FS 33538 OF SAE AMSSTD-595A.*
2. *WHERE DETECTABLE WARNING SURFACE DOES NOT PROVIDE A 70% CONTRAST WITH ADJACENT WALKING SURFACES, A 1-INCH WIDE MINIMUM VISUALLY CONTRASTING SURFACE SHALL SEPARATE THE DETECTABLE WARNING FROM THE ADJACENT SURFACE.*
3. *THE DOMES SHALL BE MANUFACTURED BY ARMOR TILE INC. OR APPROVED EQUAL.*
4. *ONLY APPROVED DSA/AC DETECTABLE WARNING PRODUCTS AND DIRECTIONAL SURFACES SHALL BE INSTALLED AS PROVIDED IN THE CALIFORNIA CODE OF REGULATIONS (CCR), TITLE 24, PART 1, CHAPTER 5, ARTICLES 2, 3 AND 4.*

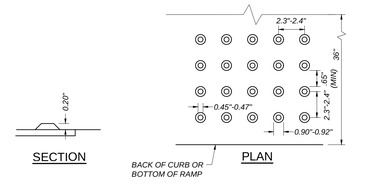

L X101.2 DETECTABLE WARNINGS
NOT TO SCALE

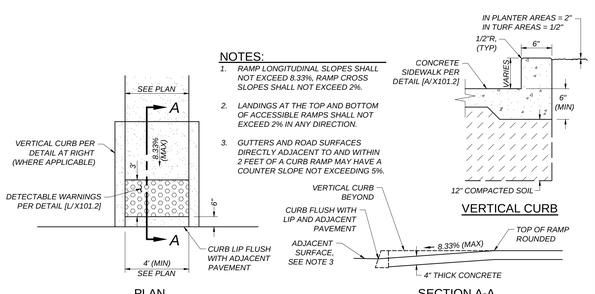

M X101.2 ACCESSIBLE RAMP SECTION
NOT TO SCALE

NOTE: THE GRADE DIFFERENTIAL FROM GUTTER TO LIP SHALL BE 1" WHERE GUTTER IS LOCATED AT CURB RAMPS AND AT CROSSWALKS, SEE GRADING PLAN.

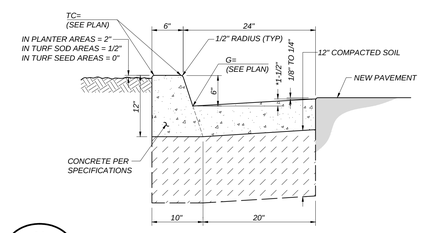

N X101.2 CONCRETE CURB AND GUTTER
NOT TO SCALE

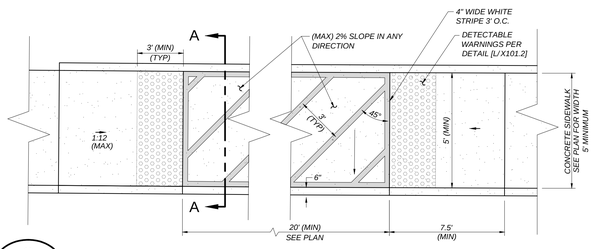

O X101.2 ACCESSIBLE RAMP SECTION
NOT TO SCALE

NOTES:

1. *RAMP LONGITUDINAL SLOPES SHALL NOT EXCEED 8.33%, RAMP CROSS SLOPES SHALL NOT EXCEED 2%.*
2. *LANDINGS AT THE TOP AND BOTTOM OF ACCESSIBLE RAMPS SHALL NOT EXCEED 2% IN ANY DIRECTION.*

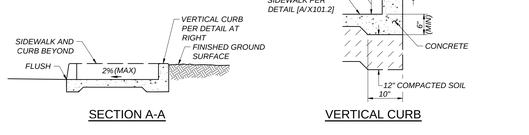

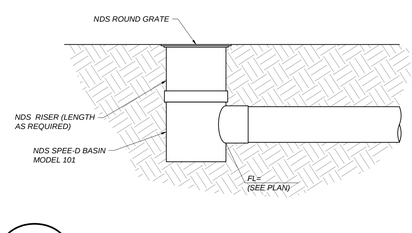

P X101.2 AREA DRAIN
NOT TO SCALE

IDENTIFICATION STAMP
DIV. OF THE STATE ARCHITECT
APP: 02-122821 INC: 2
REVIEWED FOR
SS ☑ FLS ☑ ACS ☑
DATE: 11/20/2025

Teter, Inc. expressly reserves its common law copyright and other property rights in these plans. This document, the ideas and designs incorporated herein, as an instrument of professional service, is not to be used in whole or in part, for any other project without prior written authorization.

MARK	DATE	DESCRIPTION
A	11/13/2025	DSA BACKCHECK

REGISTERED PROFESSIONAL ENGINEER LANE R. BAILEY No. 47103 CIVIL STATE OF CALIFORNIA
9/2/2025
Date Signed:

TETER, INC.
FRESNO HEADQUARTERS
VISALIA | BAKERSFIELD | MODESTO | SAN LUIS OBISPO
ARCHITECTS ENGINEERS CONNECTED

TETER

VISALIA CAMPUS UNIVERSITY CENTER
COLLEGE OF THE SEQUOIAS
915 S. MOONEY BLVD
915 S MOONEY BLVD, VISALIA, CA 93277

DRAWING TITLE
DETAILS

PROJECT NO.
22-12498

DRAWING
X101.2

Blair, Church & Flynn
CONSULTING ENGINEERS
401 Clovis Avenue, Suite 200
Clovis, California 93612
Tel (559) 326-1400
Fax (559) 326-1600

Drawing: P:\223\223-02811\Site\ProductionDrawings\223281_dt02.dwg, Aug 19, 2025 - 2:54pm
Plot By: Hamajian

PLOT DATE: 9/22/2025 2:54:13 PM

P:\223\223-0281\Site\ProductionDrawings\223281_dt02.2.dwg

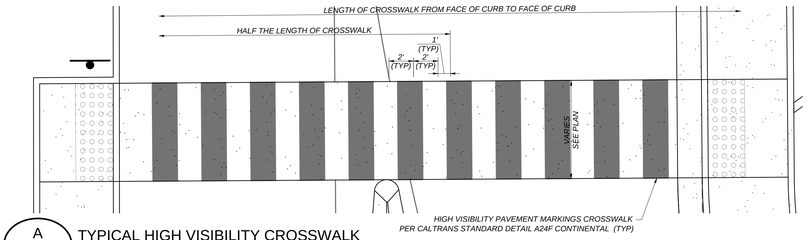

A X102.2 TYPICAL HIGH VISIBILITY CROSSWALK

SCALE: 1"=5'

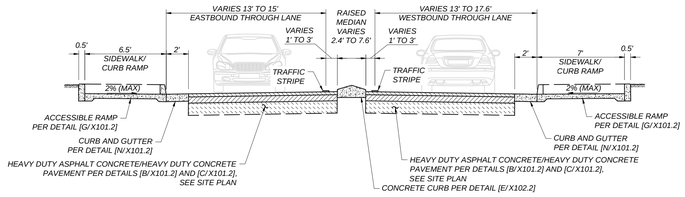

B X102.2 CROSS SECTION AT WEST MEDIAN ISLAND

NO SCALE

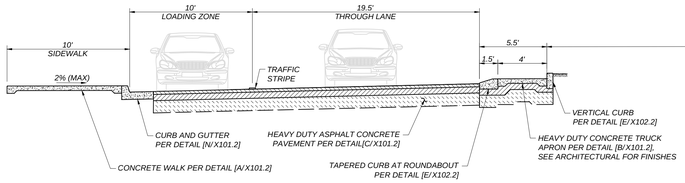

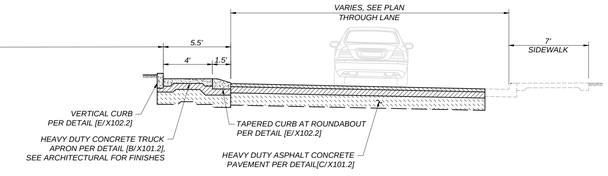

C X102.2 CROSS SECTION AT ROUNDABOUT

NO SCALE

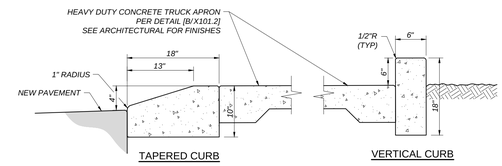

E X102.2 CONCRETE CURBS AT ROUNDABOUT

NOT TO SCALE

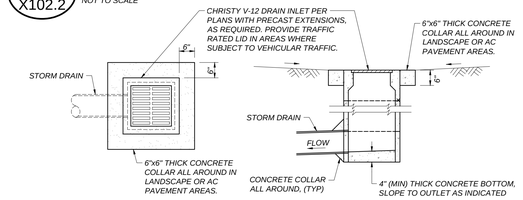

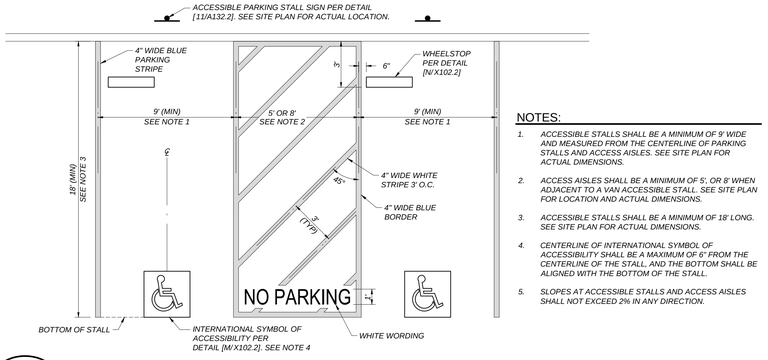

NOTES:

1. ACCESSIBLE STALLS SHALL BE A MINIMUM OF 9' WIDE AND MEASURED FROM THE CENTERLINE OF PARKING STALLS AND ACCESS AISLES. SEE SITE PLAN FOR ACTUAL DIMENSIONS.
2. ACCESS AISLES SHALL BE A MINIMUM OF 5', OR 8' WHEN ADJACENT TO A VAN ACCESSIBLE STALL. SEE SITE PLAN FOR LOCATION AND ACTUAL DIMENSIONS.
3. ACCESSIBLE STALLS SHALL BE A MINIMUM OF 18' LONG. SEE SITE PLAN FOR ACTUAL DIMENSIONS.
4. CENTERLINE OF INTERNATIONAL SYMBOL OF ACCESSIBILITY SHALL BE A MAXIMUM OF 6" FROM THE CENTERLINE OF THE STALL, AND THE BOTTOM SHALL BE ALIGNED WITH THE BOTTOM OF THE STALL.
5. SLOPES AT ACCESSIBLE STALLS AND ACCESS AISLES SHALL NOT EXCEED 2% IN ANY DIRECTION.

G X102.2 V-12 DRAIN INLET WITH CONCRETE COLLAR

NOT TO SCALE

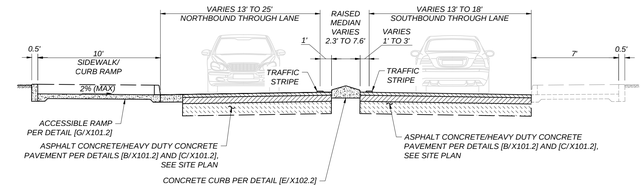

D X102.2 CROSS SECTION AT NORTH MEDIAN ISLAND

NO SCALE

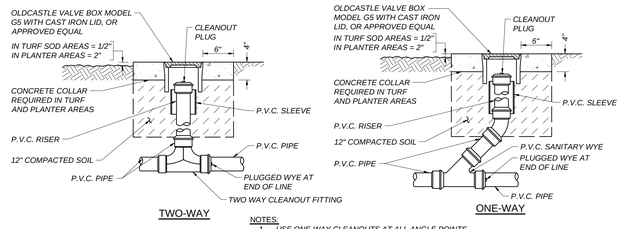

NOTES:

1. USE ONE-WAY CLEANOUTS AT ALL ANGLE POINTS
2. TWO-WAY CLEANOUTS AT ALL OTHER LOCATIONS
3. 6" THICK CONCRETE COLLAR IN VEHICULAR TRAFFIC AREAS

H X102.2 SURFACE CLEANOUT

NOT TO SCALE

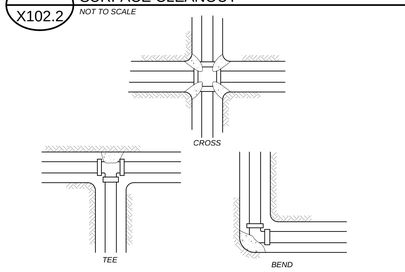

Table Of Bearing Areas Required (In Square Feet)*					
Pipe Diameter	4"	6"	8"	10"	12"
Cross, Tee, 90° Bend, Plug, Hydrant, Valve	6.3	13.2	22.7	34.2	48.3
45° Bend	3.4	7.1	12.3	18.5	26.1
22 1/2° Bend	1.7	3.6	9.4	9.4	13.3
11 1/4° Bend	0.9	1.8	4.7	4.7	6.7

* TABLE CALCULATED BASED ON NFPA 24 TABLE A.10.6.1(b), CURRENT EDITION, WITH 250 PSI WATER PRESSURE AND 1500 PSF SOIL BEARING PRESSURE.

K X102.2 CONCRETE THRUST BLOCKS

NOT TO SCALE

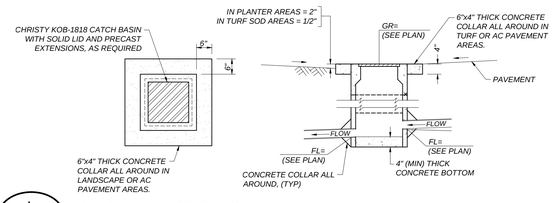

L X102.2 KOB-1818 JUNCTION BOX

NOT TO SCALE

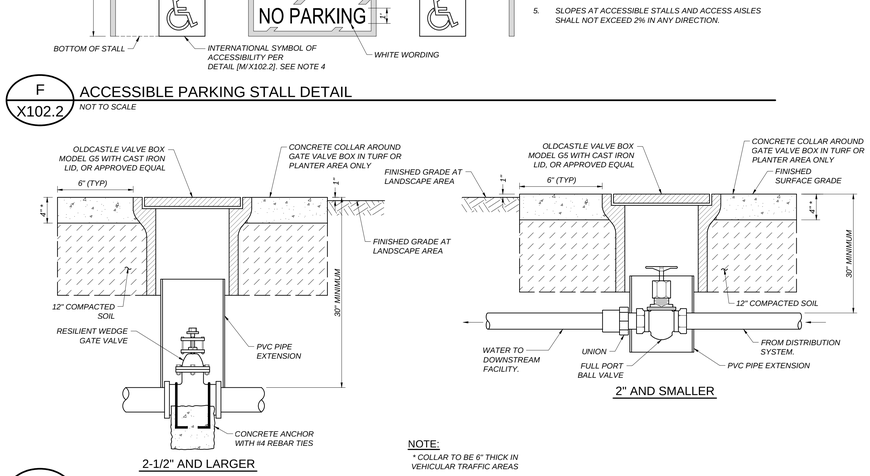

NOTE:

* COLLAR TO BE 6" THICK IN VEHICULAR TRAFFIC AREAS

I X102.2 GATE VALVE AND LID

NOT TO SCALE

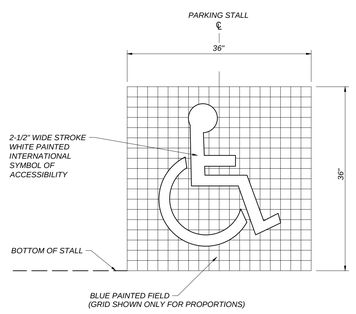

M X102.2 ACCESSIBLE SYMBOL

NOT TO SCALE

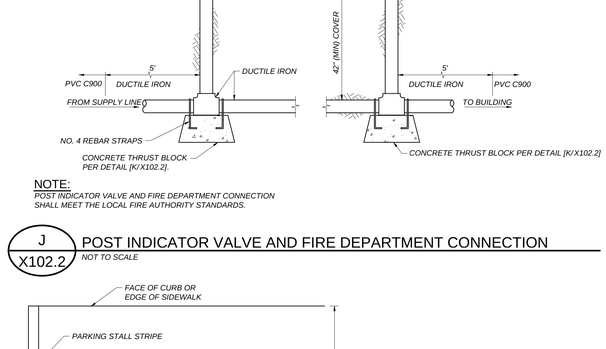

NOTE:

POST INDICATOR VALVE AND FIRE DEPARTMENT CONNECTION SHALL MEET THE LOCAL FIRE AUTHORITY STANDARDS.

J X102.2 POST INDICATOR VALVE AND FIRE DEPARTMENT CONNECTION

NOT TO SCALE

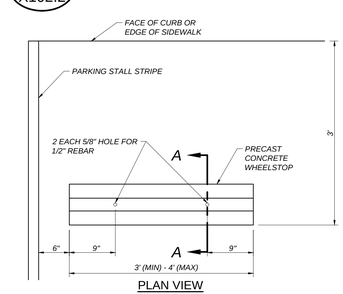

N X102.2 DETAIL OF TYPICAL WHEELSTOP

NOT TO SCALE

IDENTIFICATION STAMP
DIV. OF THE STATE ARCHITECT
APP: 02-122821 INC: 2
REVIEWED FOR
SS ☑ FLS ☑ ACS ☑
DATE: 11/20/2025

Teter, Inc. expressly reserves its common law copyright and other property rights in these plans. This document, the ideas and designs incorporated herein, as an instrument of professional service, is not to be used in whole or in part, for any other project without prior written authorization.

MARK	DATE	DESCRIPTION
A	11/13/2025	DSA BACKCHECK

REGISTERED PROFESSIONAL ENGINEER CLAYE R. BAIR No. 41063 CIVIL STATE OF CALIFORNIA
9/2/2025
Date Signed:

TETER, INC.
FRESNO HEADQUARTERS
VISALIA I BAKERSFIELD I MODESTO I SAN LUIS OBISPO
ARCHITECTS ENGINEERS CONNECTED

VISALIA CAMPUS UNIVERSITY CENTER
COLLEGE OF THE SEQUOIAS
915 S. MOONEY BLVD
915 S MOONEY BLVD, VISALIA, CA 93277

DRAWING TITLE
DETAILS

PROJECT NO.
22-12498

DRAWING
X102.2

Blair, Church & Flynn
CONSULTING ENGINEERS
400 Clovis Avenue, Suite 200
Clovis, California 93612
Tel (559) 326-1400
Fax (559) 326-1200

Drawing: P:\223\223-0281\Site\ProductionDrawings\223281_dt02.2.dwg, 9/2/2025 3:18:52 PM, Plot by: mmejia

PLOT DATE: 9/22/2025 3:18:52 PM

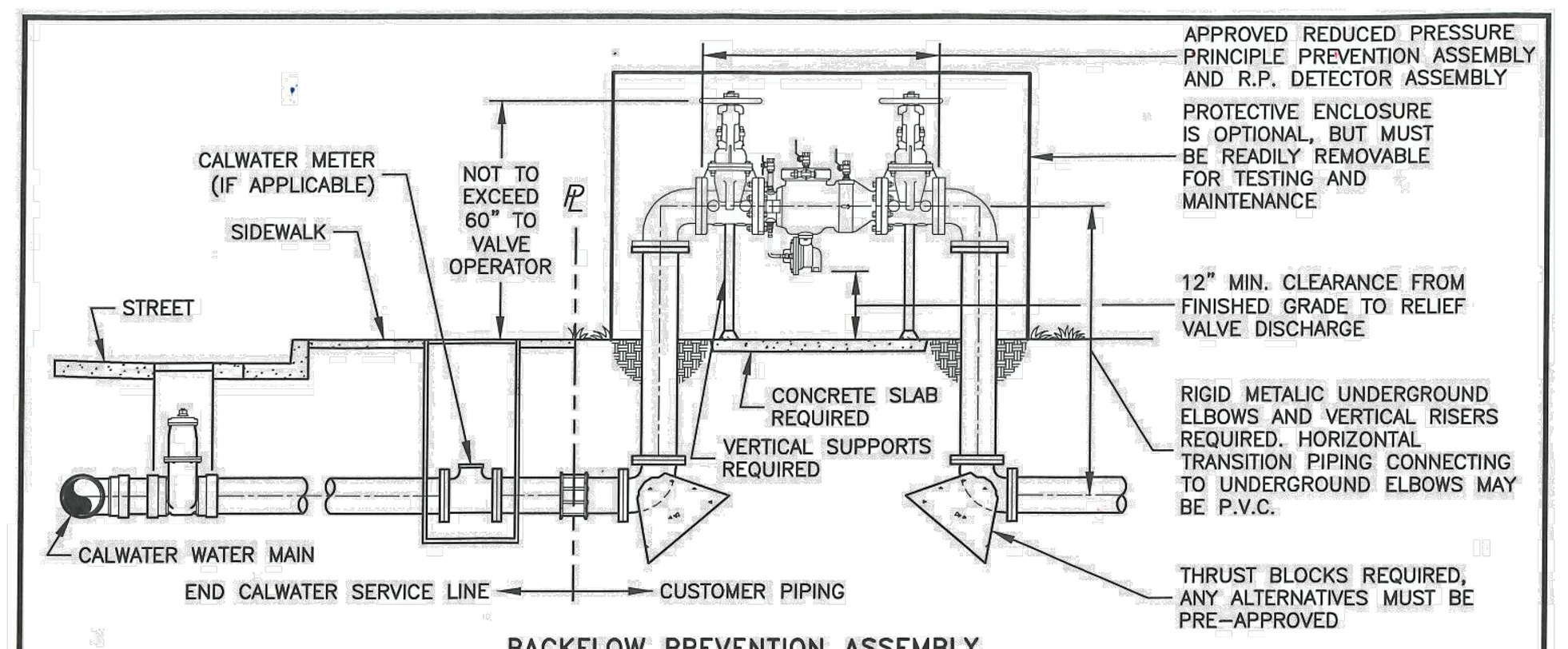

BACKFLOW PREVENTION ASSEMBLY
STANDARD INSTALLATION INSTRUCTIONS

1. A backflow prevention assembly is considered customer plumbing. Cal Water assumes no liability and makes no warranty regarding performance of any backflow prevention assembly.

2. Backflow prevention assembly shall be only those approved for use by the State Water Resources Control Board. Backflow prevention assembly and all piping used for potable water service must be lead free (<0.25% lead). Dedicated irrigation and fire suppression services may continue to use approved low lead components.

3. Any deviation from the installation specifications described herein must receive Cal Water approval prior to installation.

4. Backflow prevention assembly shall be installed on the consumer's property, immediately after the meter, in the orientation in which it was evaluated and approved. If backflow prevention assembly cannot be placed immediately after the meter, then proposed location needs to be approved by Cal Water prior to construction. In addition, a 4" concrete cap and/or secondary pipe sleeve shall be placed around the water pipe connecting the meter and the assembly. Below ground elbows and vertical piping must be rigid metallic. Vertical clearance from the relief valve discharge to finished grade and obstructions shall be between 12" and 36". Shutoff valve operating handles must be ≤ 60" from finished grade. A minimum 18" horizontal clearance must be provided for testing and maintenance. Installation shall comply with all local ordinances pertaining to permits and property line setback requirements.

5. No outlets, tees, taps, bypass, swing joints, or other connections, temporary or permanent, shall be installed between the water meter and the backflow prevention assembly. Pressure reducing valves and/or unions may be installed upstream of the backflow prevention assembly.

6. A concrete slab and vertical supports are required on assembly sizes 3" and larger.

7. Any plumbing modification to any part of the backflow prevention assembly will render the assembly "unapproved". Unapproved assemblies will result in disruption of water service and will require replacement with an approved assembly at customer's expense.

8. Installation of a backflow prevention assembly creates a closed water system. Cal Water recommends installation of thermal expansion protection as required by the California Plumbing Code.

9. Where necessary the backflow prevention assembly should be protected from vehicle damage.

10. In freeze prone areas, protective measures are recommended. Any protective enclosure must have adequate drainage sized for the full rated discharge of the backflow prevention assembly. Enclosures that contain multiple backflow prevention assemblies must have drains sized for the combined discharge rate.

11. Water services which cannot be turned off for short durations should have backflow prevention assemblies installed in parallel.

12. Under no circumstances are the backflow prevention assembly's test ports be used for anything other than testing (i.e. no garden hose connections, tubing, irrigation timers, etc.)

13. The relief port located at the bottom of the backflow prevention assembly must be kept free of all obstructions at all times.

14. It is the customer's responsibility to ensure that the backflow prevention assembly is kept in good working order at all times, to have the assembly tested annually and after repairs, according to Cal Water requirements. Failure to perform required testing or keep the backflow prevention assembly in good working order will result in disruption of water service.

15. Contact your local Cal Water office to schedule a final inspection PRIOR to backfilling any exposed piping. Re-excavation may be required if trenches are backfilled prior to inspection by Cal Water.

ENGINEERING DEPARTMENT (CALIFORNIA WATER SERVICE)	DISTRIBUTION MAP ☐ / PLAT MAP ☐ / SYSTEM SCHEMATIC ☐ / STATION SCHEMATIC ☐ (DATE: INIT.)	TITLE: REDUCED PRESSURE PRINCIPLE (RP) & RP DETECTOR ASSEMBLY FOR 3" & LARGER SERVICES		DISTRICT: All
		DRAWN BY: L. Peralta	DESIGNED BY:	DATE: 11/4/2020
	PLAT SHT:	CHECKED BY: J. Graham DATE:	APPROVED BY: [signature] DATE: 7-27-21	PROJECT ID.:
	SCALE: N.T.S.	REVISION: R4. Modified Insallation Instruction Notes 4, 5, 6 & 10. Revised/Added Dimensions & Notes. 11/4/2020 W.R.		DRAWING NO.: CW752 R4

A / X103.2 RP DETECTOR ASSEMBLY
NOT TO SCALE

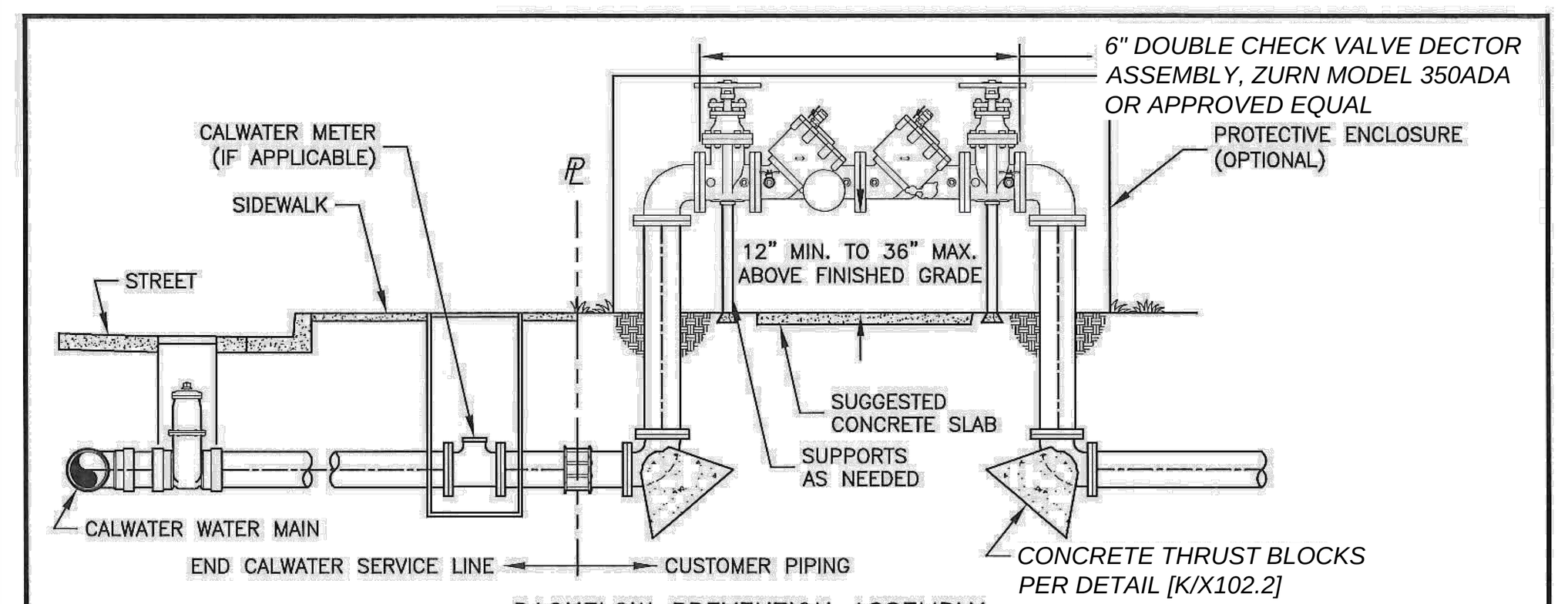

BACKFLOW PREVENTION ASSEMBLY
STANDARD INSTALLATION INSTRUCTIONS

1. A backflow prevention assembly is considered customer plumbing. Cal Water assumes no liability and makes no warranty regarding performance of any backflow prevention assembly.

2. Backflow prevention assembly shall be only those approved for use by the State Water Resources Control Board. Backflow prevention assembly and all piping used for potable water service must be lead free (<0.25% lead). Dedicated irrigation and fire suppression services may continue to use approved low lead components.

3. Any deviation from the installation specifications described herein must receive Cal Water approval prior to installation.

4. Backflow prevention assembly shall be installed on the consumer's property, immediately after the meter, in the orientation in which it was evaluated and approved. If backflow prevention assembly is not placed immediately after the meter, then proposed location needs to be approved by Cal Water. In addition, 4" concrete cap and/or sleeve shall be placed around the pipe connecting the meter and the assembly. Vertical clearance to finished grade and obstructions shall be between 12 and 36 inches. A minimum 18" horizontal clearance must be provided for testing and maintenance. Installation shall comply with all local ordinances regarding permits and property line setback requirements.

5. No outlets, tees, taps, by-pass, swing joints, or other connections, temporary or permanent, shall be installed between the water meter and the backflow prevention assembly. Pressure reducing valves and unions (not part of the backflow prevention assembly) may be installed upstream of the backflow prevention assembly; however, in no case shall there be a union located both upstream and downstream of the assembly.

6. Alternate installation locations or arrangements shall be reviewed and approved by Cal Water prior to installation.

7. Any plumbing modification to any part of the backflow prevention assembly will render the assembly "unapproved". Unapproved assemblies will result in disruption of water service and will require replacement with an approved assembly at customer's expense.

8. Installation of a backflow prevention assembly creates a closed water system. Cal Water recommends installation of thermal expansion protection as required by the California Plumbing Code.

9. Where necessary the backflow prevention assembly should be protected from vehicle damage.

10. In freeze prone areas, a protective enclosure is recommended. Enclosure must have adequate drainage in accordance with Cal Water requirements.

11. Water services which cannot be turned off for short durations should have backflow prevention assemblies installed in parallel.

12. Under no circumstances are the backflow prevention assembly's test ports be used for anything other than testing (i.e. no garden hose connections, tubing, irrigation timers, etc.)

13. It is the customer's responsibility to ensure that the backflow prevention assembly is kept in good working order at all times, to have the assembly tested annually and after repairs, according to Cal Water requirements. Failure to perform required testing or keep the backflow prevention assembly in good working order will result in disruption of water service.

14. Contact your local Cal Water office to schedule a final inspection PRIOR to backfilling any exposed piping. Re-excavation may be required if trenches are backfilled prior to inspection by Cal Water.

ENGINEERING DEPARTMENT (CALIFORNIA WATER SERVICE)	DISTRIBUTION MAP ☐ / PLAT MAP ☐ / SYSTEM SCHEMATIC ☐ / STATION SCHEMATIC ☐ (DATE: INIT.)	TITLE: DOUBLE CHECK VALVE ASSEMBLY DOUBLE CHECK VALVE DETECTOR ASSY TYPICAL ABOVE GRADE INSTALLATION		DISTRICT: All
		DRAWN BY: L. Peralta	DESIGNED BY:	DATE: 2/10/16
	PLAT SHT:	CHECKED BY: J. Graham DATE:	APPROVED BY: [signature] DATE: 2/10/16	PROJECT ID.:
	SCALE: N.T.S.	REVISION: R3. Revised to meet drafting standards, minor corrections, modified note 2; Split & modified note 4. LP/WR 2/10/2016		DRAWING NO.: CW762 R3

B / X103.2 DOUBLE DETECTOR CHECK ASSEMBLY
NOT TO SCALE

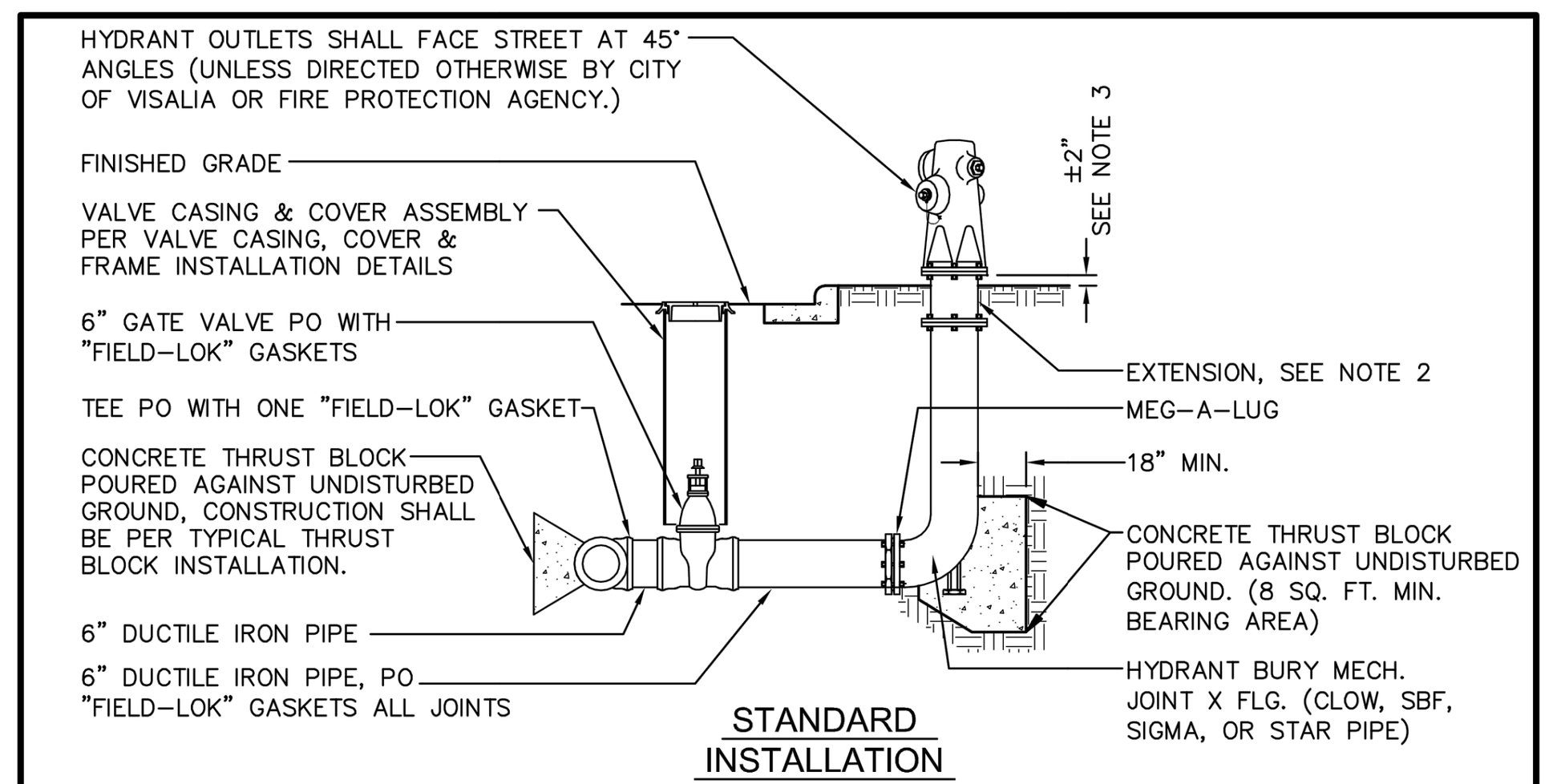

STANDARD INSTALLATION

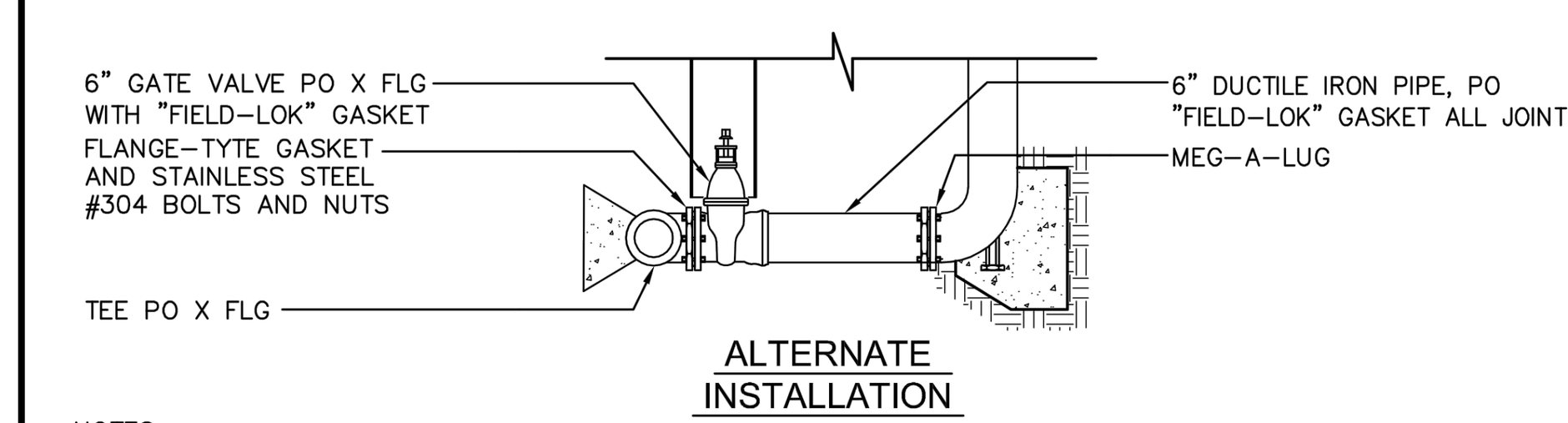

ALTERNATE INSTALLATION

NOTES:

1. ALL FIRE HYDRANT MATERIALS SHALL COMPLY WITH MATERIAL SPECIFICATIONS.
2. A HYDRANT EXTENSION MAY BE REQUIRED TO ADJUST FOR FINISHED GRADE.
3. FOR WET BARREL HYDRANTS THIS DIMENSION IS FROM FINISHED GRADE TO BURY'S FLANGE OR EXTENSION'S FLANGE WHEN AN EXTENSION IS REQUIRED.
4. PUSH-ON, FLANGED FITTING JOINTS, AND/OR THREADED-FLANGED RISERS MAY BE REQUIRED. VERIFY WITH A CITY OF VISALIA REPRESENTATIVE ALL FIRE HYDRANT MATERIAL PRIOR TO THE INSTALLATION.
5. FIRE HYDRANT BARRICADES SHALL BE REQUIRED WHEN A VERTICAL OR ROLLED CURB DOES NOT EXIST, OR WHEN THE FIRE HYDRANT NEEDS TO BE PROTECTED FROM MOVING VEHICLES.
6. ALL MACHINE BOLTS AND NUTS SHALL BE #304 STAINLESS STEEL, EXCEPT FOR BREAKOFF BOLTS.
7. A 90° ELBOW WITH "FIELD-LOK" GASKETS MAY BE REQUIRED FOR THE FIRE HYDRANT INSTALLATION WHEN SPACE IS LIMITED AND THE HYDRANT LEAD MUST RUN PARALLEL TO THE MAIN OR THE LOCATION OF THE FIRE HYDRANT REQUIRES THE BEND.

APPROVED BY: [signature] 09/16/16 — PUBLIC WORKS DIRECTOR, R.C.E. 50022, DATE	CITY OF VISALIA DESIGN & IMPROVEMENT STANDARDS	
TYPICAL FIRE HYDRANT INSTALLATION	REVISIONS 11/26/07	W-1

C / X103.2 FIRE HYDRANT ASSEMBLY
NOT TO SCALE

IDENTIFICATION STAMP
DIV. OF THE STATE ARCHITECT
APP: 02-122821 INC: 2
REVIEWED FOR
SS ☑ FLS ☑ ACS ☑
DATE: 11/20/2025

Teter, Inc. expressly reserves its common law copyright and other property rights in these plans. This document, the ideas and designs incorporated herein, as an instrument of professional service, is not to be used in whole or in part, for any other project without prior written authorization.

MARK	DATE	DESCRIPTION
A	11/13/2025	DSA BACKCHECK

REGISTERED PROFESSIONAL ENGINEER LANE R. BADER No. 47,033 CIVIL STATE OF CALIFORNIA
9/2/2025 Date Signed:

TETER, INC.
FRESNO HEADQUARTERS
VISALIA I BAKERSFIELD I MODESTO I SAN LUIS OBISPO
ARCHITECTS ENGINEERS CONNECTED
TETER

VISALIA CAMPUS UNIVERSITY CENTER
COLLEGE OF THE SEQUIOAS
915 S. MOONEY BLVD
915 S MOONEY BLVD, VISALIA, CA 93277

DRAWING TITLE
DETAILS

PROJECT NO.
22-12498

DRAWING
X103.2

Blair, Church & Flynn
CONSULTING ENGINEERS
451 Clovis Avenue, Suite 200
Clovis, California 93612
Tel (559) 326-1400
Fax (559) 326-1500

P:\223\223-0281\Site\ProductionDrawings\223281_dt03.2.dwg
PLOT DATE: 9/22/2025 3:18:58 PM
Drawing: P:\223\223-0281\Site\ProductionDrawings\223281_dt03.2.dwg; x103.2 - BCF.CTB
Plot by: manaya Sep 22, 2025 - 3:18pm

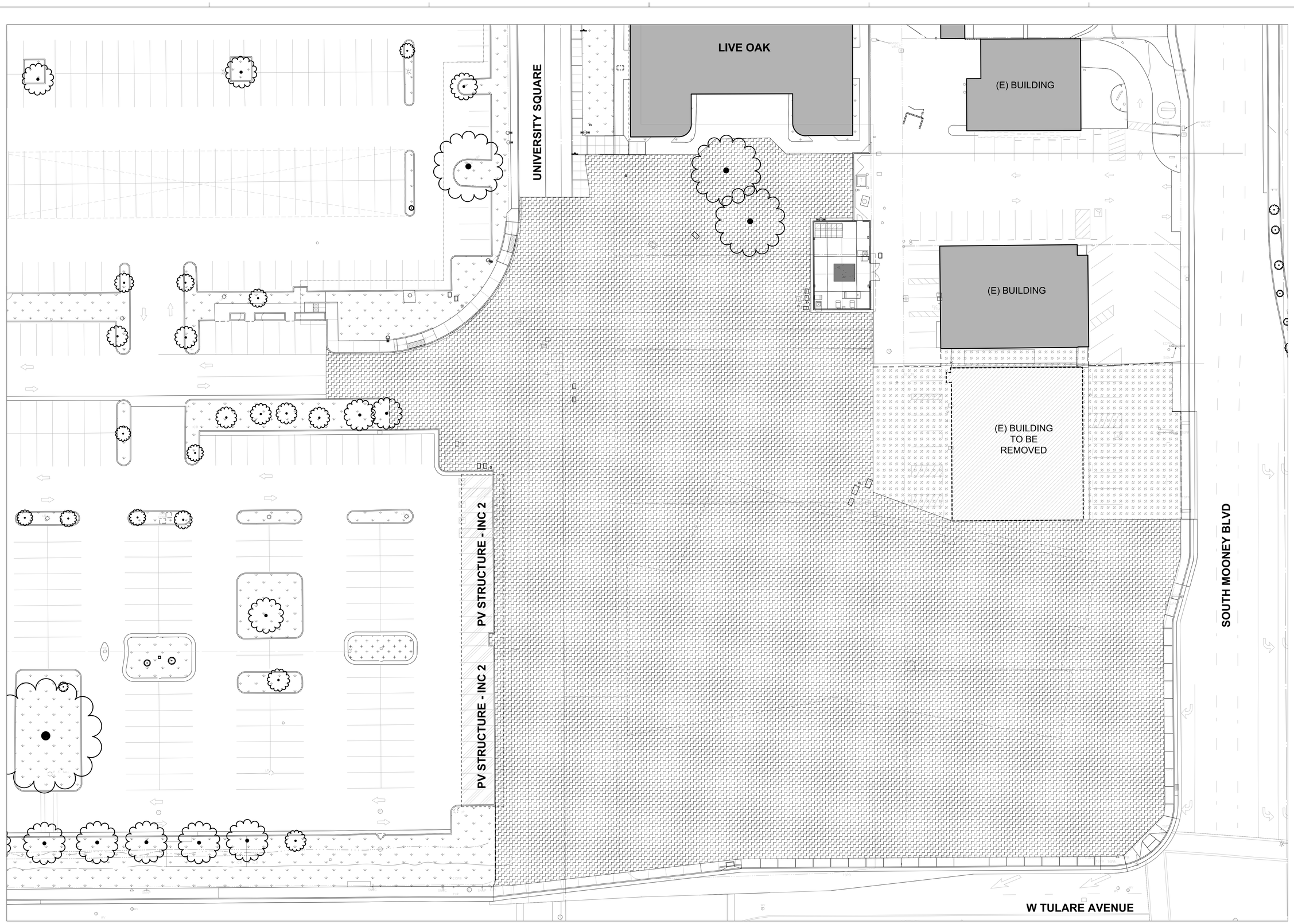

SEE LANDSCAPE DEMOLITION LEGEND ON PLAN SHEET L102.2

NORTH

LANDSCAPE DEMOLITION PLAN

1" = 20'-0"

1

David Bigler Associates
Landscape Architect #3887
1589 W Shaw Ave, #5
Fresno, California 93711
E Mail: davebigler @aol.com
Tel: (559) 276-9495
Fax: (559) 276-9497

IDENTIFICATION STAMP
DIV. OF THE STATE ARCHITECT
APP: 02-122821 INC: 2
REVIEWED FOR
SS ☑ FLS ☑ ACS ☑
DATE: 11/20/2025

Teter, Inc. expressly reserves its common law copyright and other property rights in these plans. This document, the ideas and designs incorporated herein, as an instrument of professional service, is not to be used in whole or in part, for any other project without prior written authorization.

MARK	DATE	DESCRIPTION
A	11/13/2025	DSA BACKCHECK

LICENSED LANDSCAPE ARCHITECT
DAVID B. BIGLER
RLA # 3887
31 JULY 26
REGISTRATION DATE
STATE OF CALIFORNIA

TETER, INC.
FRESNO HEADQUARTERS
VISALIA | BAKERSFIELD | MODESTO | SAN LUIS OBISPO
ARCHITECTS ENGINEERS CONNECTED

VISALIA CAMPUS UNIVERSITY CENTER
COLLEGE OF THE SEQUIOAS
915 S. MOONEY BLVD
915 S MOONEY BLVD, VISALIA, CA 93277

DRAWING TITLE
LANDSCAPE DEMOLITION PLAN

PROJECT NO.
22-12498

DRAWING
L100.2

PLOT DATE: 10/1/2024 4:12:03 PM

\\tetr-file1\Users\Gerardo.Juarez_TETR\Documents\12632-A-COS Promenade_gerardo.juarez7Z6UR.rvt

\\tetr-file1\Users\Gerardo.Juarez_TETR\Documents\12832-A-COS Promenade_gerardo.juarez7Z6UR.rvt

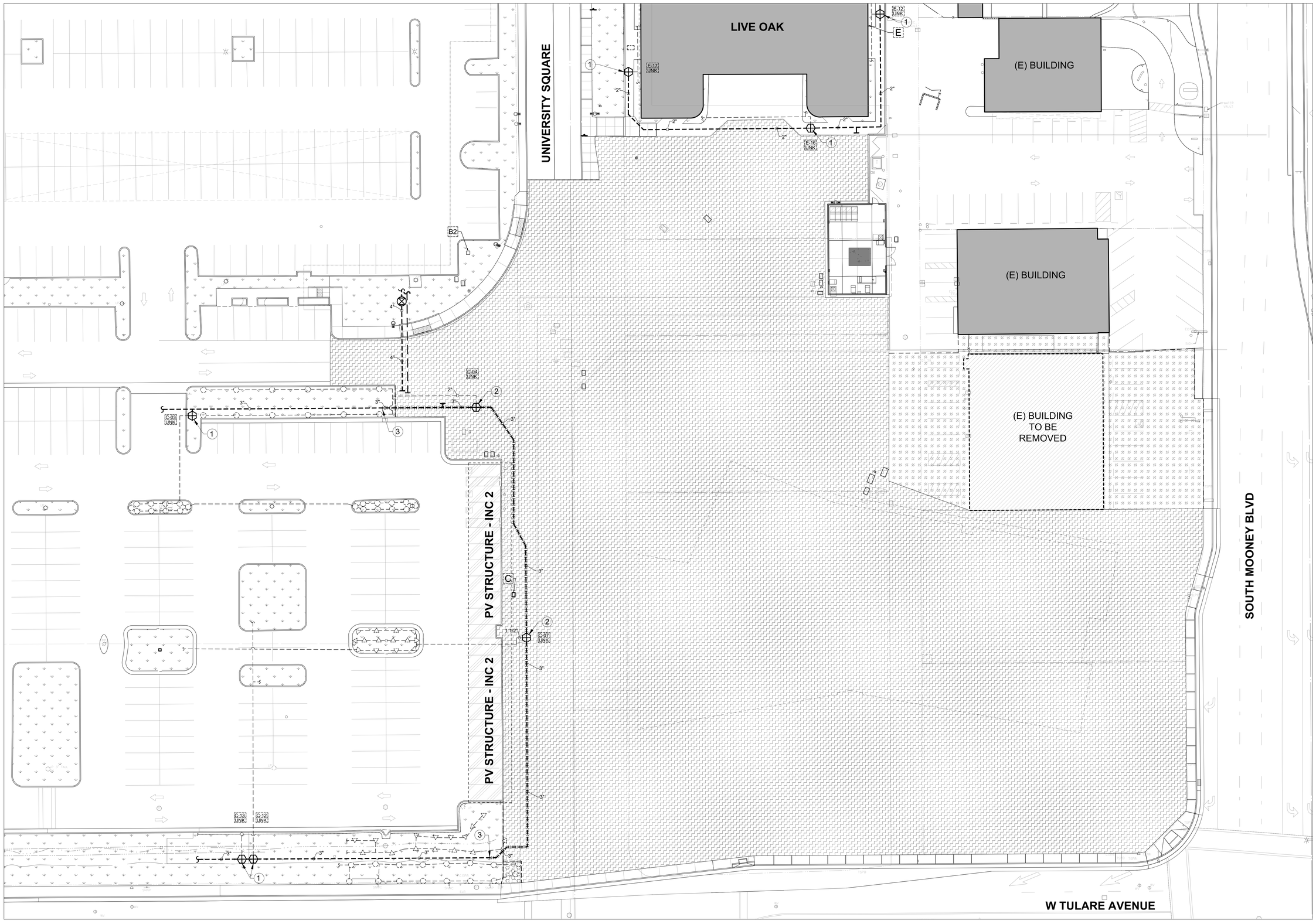

SEE LANDSCAPE IRRIGATION DEMOLITION LEGEND & KEYNOTES ON PLAN SHEET L102.2

NORTH

1" = 20'-0" | 2

LANDSCAPE IRRIGATION DEMOLITION PLAN

PLOT DATE: 10/1/2024 4:12:03 PM

IDENTIFICATION STAMP
DIV. OF THE STATE ARCHITECT
APP: 02-122821 INC: 2
REVIEWED FOR
SS ☑ FLS ☑ ACS ☑
DATE: 11/20/2025

Teter, Inc. expressly reserves its common law copyright and other property rights in these plans. This document, the ideas and designs incorporated herein, as an instrument of professional service, is not to be used in whole or part, for any purpose without prior written authorization.

MARK	DATE	DESCRIPTION
A.	11/13/2025	DSA BACKCHECK

LANDSCAPE ARCHITECT
DAVID BIGLER
RLA # 3887
31 JULY 26
STATE OF CALIFORNIA

TETER, INC.
FRESNO HEADQUARTERS
VISALIA | BAKERSFIELD | MODESTO | SAN LUIS OBISPO
ARCHITECTS ENGINEERS CONNECTED

David Bigler Associates
Landscape Architect #3887
1589 W Shaw Ave, #5
Fresno, California 93711
E Mail: davebigler @aol.com
Tel: (559) 276-9495
Fax: (559) 276-9497

VISALIA CAMPUS UNIVERSITY CENTER
COLLEGE OF THE SEQUOIAS
915 S. MOONEY BLVD
915 S MOONEY BLVD, VISALIA, CA 93277

DRAWING TITLE
LANDSCAPE IRRIGATION DEMOLITION PLAN

PROJECT NO. 22-12498

DRAWING L101.2

\\tet-file1\Users\Gerardo.Juarez_TETR\Documents\12832-A-COS Promenade_gerardo.juarez7Z6UR.rvt

LANDSCAPE DEMOLITION LEGEND

SYMBOL	DESCRIPTION
	Existing Tree to be Removed. Contractor is to remove the designated trees to include all vegetation, branches, trunk, stump and roots to a minimum depth of 36" below grade. Contractor is to fill any depressed areas with clean sandy topsoil and haul all debris off site at the contractors expense to an approved disposal site. Contractor to field verify.
	Existing Tree to Remain & Protect. Limit compaction and disturbance within the tree drip line. Provide temporary water as required to maintain a healthy growth state throughout the duration of the project. Temporary water is to be automated. Contractor to field verify.
	Existing Turf & Landscape Areas to Remain and Protect. Existing turf, plant material or trees that are damaged due to construction activities, vehicle damage, stress due to lack of water or other deterioration of the existing areas to remain are to be restored by the Contractor to the existing condition prior to the project at no additional cost to the District. This includes damage that may occur at any area of the campus. In disturbed areas, the Contractor is to fill and grade low and depressed areas with clean sandy topsoil and hydroseed existing turf areas to match the adjacent existing turf. In shrub areas, after grading as described above, the Contractor is to repair any damage and replace any stressed or damaged plant material to match the existing. The Contractor is responsible for sodding over trenches and all disturbed turf areas due to any construction activities. Contractor is to maintain sodded and repaired landscape areas until fully established and weed free, a minimum of 90 days or until accepted by the District.
	Existing Landscape Planter Demolition: Contractor is to remove all existing plants, vegetation and other shrubs to include all vegetation, branches, trunk, stump and roots to a minimum depth of 36" below grade. Contractor is to fill any depressed areas with clean sandy topsoil and haul all debris off site at the Contractors expense to an approved disposal site. Contractor to field verify.
	Fallow Soil Area for Development of the University Center Project. Demolition work has been completed previously and the designated area has been graded smooth. Contractor is to field verify existing conditions prior to bid.
	Existing Hardscape Areas to be removed and disposed of off site. See Civil Site Demolition Plans for sequencing of work and additional information. Contractor to field verify.

LANDSCAPE IRRIGATION DEMOLITION LEGEND

SYMBOL	DESCRIPTION
	Existing Sprinklers to Remain & Protect, unless otherwise noted. See Keynotes, Designated Irrigation Demolition Areas and Landscape Irrigation Plan, L300.2 for additional information. Contractor to field verify.
	Existing Lateral Pipe to Remain & Protect, unless otherwise noted. See Keynotes, Designated Irrigation Demolition Areas and Landscape Irrigation Plans. Routing shown is diagrammatic. Contractor is to pot hole and field locate all relevant existing irrigation improvements that affect construction activities. Sections of the existing lateral pipe are being taken out of service. Lateral piping being taken out of service is to be removed where it interfere's with construction activities, or is located below the proposed buildings, otherwise existing lateral piping being taken out of service may be abandoned below grade. Modify as required for the project. Contractor to field verify.
	Existing Drip Pipe to Remain & Protect, unless otherwise noted. See Keynotes, Designated Irrigation Demolition Areas and Landscape Irrigation Plans. Sections of the existing drip pipe are being taken out of service. Drip piping being taken out of service is to be removed where it interfere's with construction activities, otherwise existing drip piping being taken out of service is to be removed and disposed of off site at an approved disposal site. Modify as required for the project. Contractor to field verify.
	Existing Irrigation Mainline (Remain & Protect): Routing shown is diagrammatic. Contractor is to pot hole and field locate all relevant existing irrigation improvements that affect construction activities. Sections of the existing mainline pipe are to remain and protect and other sections are being taken out of service. Contractor is to field verify existing conditions prior to bid to determine the final extent of work. See Irrigation Plan L300.2 for additional information where new irrigation mainline will replace existing irrigation mainline pipe. Contractor to field verify.
	Existing Irrigation Mainline (Abandoned/Removed): Routing shown is diagrammatic. Contractor is to pot hole and field locate all relevant existing irrigation improvements that affect construction activities. Sections of the existing mainline pipe are being taken out of service. Mainline piping being taken out of service is to be removed and disposed of to an approved disposal site as part of the bid. Contractor is to field verify existing conditions prior to bid to determine the final extent of work. See Irrigation Plan L300.2 for additional information where new irrigation mainline will replace existing irrigation mainline pipe. Contractor to field verify.
	Existing Irrigation Communication Cable (Existing Controller 'B2'): Rainmaster 2-wire communication cable #TW-CAB-14 (Black & Red) installed in 1 1/2" PVC Schedule 40 Electrical conduit with sweep ells into all valve boxes. Routing shown is diagrammatic. Contractor is to pot hole and field locate all relevant existing irrigation improvements that affect construction activities. Contractor is to field verify existing conditions prior to bid to determine the final extent of work. See Irrigation Plan L300.2 for additional information. Contractor to field verify.
	Existing Remote Control Valve to Remain & Protect, unless otherwise noted. See Keynotes and Landscape Irrigation Plan, L300.2 for additional information. Contractor to field verify.
	Existing Remote Control Gate Valve to Remain & Protect, unless otherwise noted. See Keynotes and Landscape Irrigation Plan, L300.2 for additional information. Contractor to field verify.
C-04 UNK	Existing Controller # / Station # Gallons per minute (UNK = GPM for existing valves is Unknown)
NOT SHOWN	Existing Irrigation Controllers 'A', 'B', 'D' and 'F' are to Remain & Protect located in the campus areas north of this project. Contractor to field verify.
C	Existing 18 station (16 stations used) Irritrol MC-18E pedestal mount Irrigation Controller 'C' is to be removed and replaced. Contractor is to remove controller, while protecting the existing 120 volt power, conduit and appurtenances as required to be modified and reused for the new replacement Controller. Contractor is to remove low voltage control wires from controller station blocks for existing remote control valves removed as part of this project. Contractor is to modify programming as required. Contractor is to deliver useable salvaged equipment to the District, otherwise Contractor is to dispose of removed equipment not wanted by the District to an approved disposal site. See Landscape Irrigation Plan L300.2 for additional information. Contractor to field verify.
B2	Existing Irrigation Controller 'B2' to Remain and Protect. Existing Controller 'B2' is a Rainmaster Eagle Plus 2-wire controller. Contractor to field verify.
E	Existing Irrigation Controller 'E' to Remain and Protect. Existing Controller 'E' is an Irritrol MC-18E wall mount with 12 stations in use after Inc. 01 work. Contractor to field verify.
	Existing Irrigation Improvements to Remain and Protect. All areas adjacent to the project area have existing Irrigation Improvements to Remain & Protect. Contractor is to repair all damage to existing improvements that are intended to remain & protect to match existing improvements. Damage may be a direct or indirect result of their work or may be caused by neglect. Contractor to field verify.
	Existing Irrigation Areas to be Removed. The Contractor is to remove existing sprinklers, valves and other irrigation improvements visible at the surface in areas to receive new irrigation and deliver salvaged parts, including, but not limited to sprinklers, valves, valve boxes etc., to the District Maintenance Department. Piping is to be removed where it interferes with construction activities or is located below proposed buildings, otherwise piping may be abandoned below grade. Where piping is brought to the surface, the Contractor shall cut it off a minimum of 12" below grade and capped. Depressions and holes that are created from removing existing irrigation improvements being replaced are to be filled with clean topsoil level with surrounding grade and compacted. Irrigation system and building water are to remain intact and operational.
	Fallow Soil Area for Development of the University Center Project. Demolition work has been completed previously and the designated area has been graded smooth. Contractor is to field verify existing conditions prior to bid.
	Existing Hardscape Areas to be removed and disposed of off site. See Civil Site Demolition Plans for sequencing of work and additional information. Contractor to field verify.

IRRIGATION DEMOLITION KEYNOTES

1. EXISTING REMOTE CONTROL VALVE TO REMAIN AND PROTECT AND MAINTAIN EXISTING CONTROLLER ASSIGNMENT ON REPLACEMENT CONTROLLER 'C'. CONTRACTOR TO FIELD VERIFY.
2. EXISTING REMOTE CONTROL VALVE TO BE REMOVED, RELOCATED AND REPLACED. INSTALL NEW REMOTE CONTROL VALVE ON THE NEW IRRIGATION MAINLINE PIPE AND CONNECT TO THE EXISTING LATERAL PIPE FOR THE NEW / EXISTING SPRINKLERS. CONTRACTOR IS TO INSTALL NEW 2-WIRE PATH CONTROL WIRING WITH DECODER TO EXISTING 2-WIRE CONTROLLER 'B2'. CONTRACTOR IS TO REMOVE EXISTING LOW VOLTAGE CONTROL WIRING FROM THE WIRE BLOCK OF CONTROLLER 'C' FOR VALVES TRANSITIONED TO CONTROLLER 'B2'. SEE IRRIGATION PLAN L300.2 FOR ADDITIONAL INFORMATION. CONTRACTOR TO FIELD VERIFY.
3. IRRIGATION POINT OF CONNECTION: CONTRACTOR IS TO CONNECT NEW IRRIGATION MAINLINE PIPE TO EXISTING IRRIGATION MAINLINE PIPE TO REMAIN IN SERVICE AT THE LOCATIONS INDICATED. EXISTING MAINLINE PIPE ROUTING IS DIAGRAMMATIC, AND CONTRACTOR IS TO FIELD LOCATE TO DETERMINE POINTS OF CONNECTION IN THE FIELD. SEE IRRIGATION PLAN L300.2 FOR ADDITIONAL INFORMATION. CONTRACTOR IS TO IDENTIFY EXISTING LOW VOLTAGE CONTROL WIRING THAT TRAVERSES THROUGH THE PROJECT TO EXISTING CONTROLLER 'C' AND IS TO INTERCEPT, SPLICE AND EXTEND IT ADJACENT TO THE NEW IRRIGATION MAINLINE PIPE AS REQUIRED TO NEW REPLACEMENT CONTROLLER 'C'. CONTRACTOR IS TO INSTALL NEW 2-WIRE PATH CONTROL WIRING TO REMOTE CONTROL VALVES IN THE PROJECT AREA WHERE NEW REMOTE CONTROL VALVES ARE INSTALLED OR REPLACED TO DESIGNATED CONTROLLER 'B2'. ALL REPLACEMENT CONTROLLER 'C' LOW VOLTAGE CONTROL WIRING IS TO BE NEW FROM THE POC LOCATIONS TO THE NEW REPLACEMENT CONTROLLER 'C' AND IS CONVENTIONAL AND IS DIRECT BURIAL. CONTRACTOR IS TO TRACE ALL EXISTING LOW VOLTAGE CONTROL WIRING FOR CONTROLLER 'C' IN THE FIELD TO DETERMINE THE BEST LOCATION TO INTERCEPT EXISTING CONTROL WIRES AS NOTED ABOVE. CONTRACTOR IS TO REMOVE EXISTING LOW VOLTAGE CONTROL WIRING FROM THE WIRE BLOCK OF CONTROLLER 'C' FOR VALVES TRANSITIONED TO CONTROLLER 'B2'. CONTRACTOR TO FIELD VERIFY.

David Bigler Associates
Landscape Architect #3887
1589 W Shaw Ave, #5
Fresno, California 93711
E Mail: davebigler @aol.com
Tel: (559) 276-9495
Fax: (559) 276-9497

PLOT DATE: 10/1/2024 4:12:03 PM

IDENTIFICATION STAMP
DIV. OF THE STATE ARCHITECT
APP: 02-122821 INC: 2
REVIEWED FOR
SS ☑ FLS ☑ ACS ☑
DATE: 11/20/2025

Teter, Inc. expressly reserves its common law copyright and other property rights in these plans. This document, the ideas and designs incorporated herein, as an instrument of professional service, is not to be used in whole or in part, for any other project without prior written authorization.

MARK	DATE	DESCRIPTION
A	11/13/2025	DSA BACKCHECK

LANDSCAPE ARCHITECT DAVID S. BIGLER RLA # 3887 31 JULY 26 STATE OF CALIFORNIA

TETER, INC.
FRESNO HEADQUARTERS
VISALIA | BAKERSFIELD | MODESTO | SAN LUIS OBISPO
ARCHITECTS ENGINEERS CONNECTED

VISALIA CAMPUS UNIVERSITY CENTER
COLLEGE OF THE SEQUOIAS
915 S. MOONEY BLVD
915 S MOONEY BLVD, VISALIA, CA 93277

DRAWING TITLE
LANDSCAPE & IRRIGATON DEMOLITION LEGENDS

PROJECT NO. 22-12498

DRAWING L102.2

\\tetr-file1\Users\Gerardo.Juarez_TETR\Documents\12832-A-COS Promenade_gerardo.juarez7Z6UR.rvt

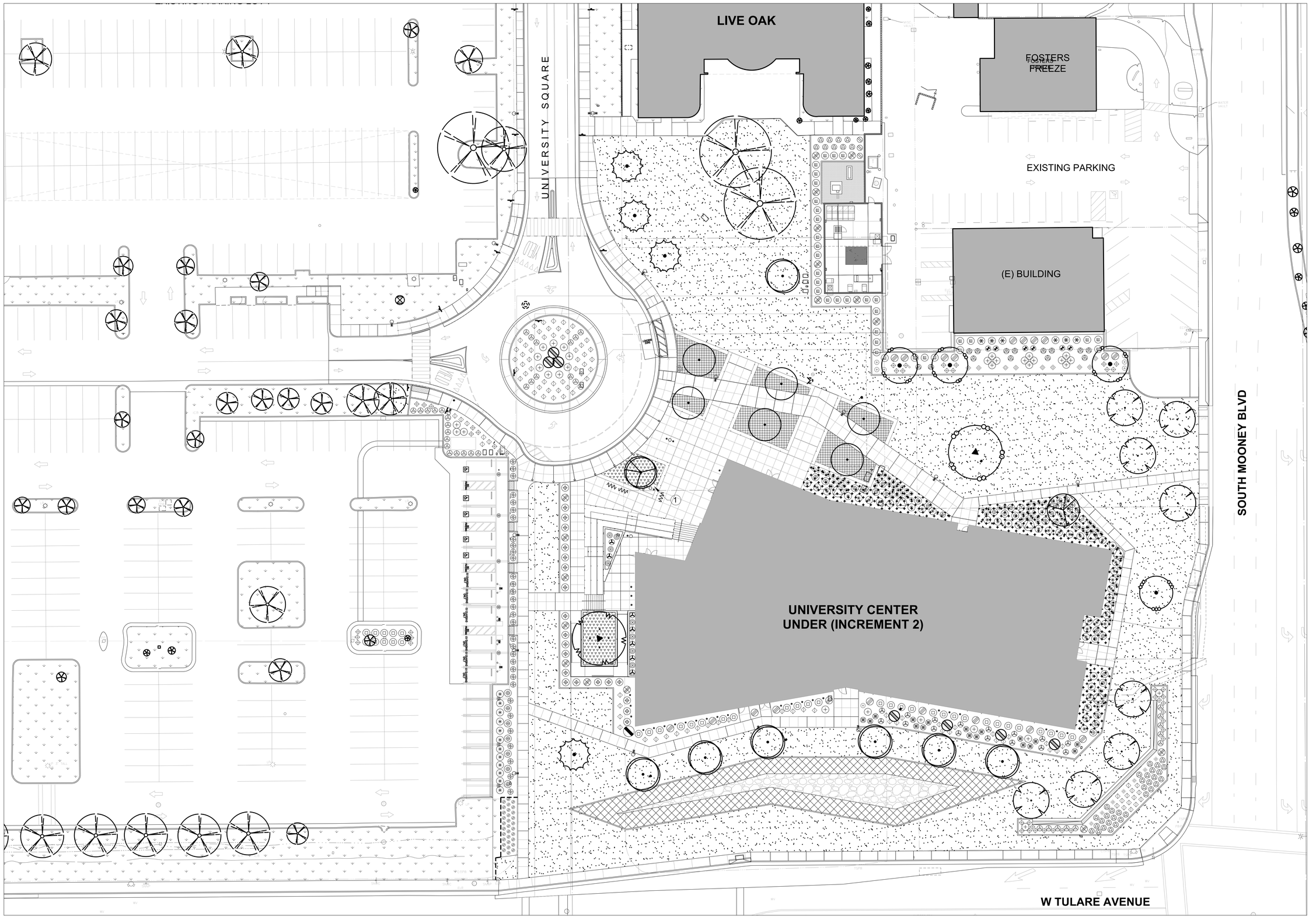

SEE LANDSCAPE PLANTING LEGEND AND KEY NOTES ON PLAN SHEET L201.2

NORTH

1" = 20'-0"

LANDSCAPE PLANTING PLAN

4

PLOT DATE: 10/1/2024 4:12:03 PM

IDENTIFICATION STAMP
DIV. OF THE STATE ARCHITECT
APP: 02-122821 INC: 2
REVIEWED FOR
SS ☑ FLS ☑ ACS ☑
DATE: 11/20/2025

Teter, Inc. expressly reserves its common law copyright and other property rights in these plans. This document, the ideas and designs incorporated herein, as an instrument of professional service, is not to be used in whole or part, for any other project without prior written authorization.

MARK	DATE	DESCRIPTION
A.	11/13/2025	DSA BACKCHECK

LANDSCAPE ARCHITECT — DAVID S. BIGLER — RLA # 3887 — 31 JULY 26 — RENEWAL — STATE OF CALIFORNIA

TETER, INC.
FRESNO HEADQUARTERS
VISALIA || BAKERSFIELD || MODESTO || SAN LUIS OBISPO
ARCHITECTS ENGINEERS CONNECTED

VISALIA CAMPUS UNIVERSITY CENTER
COLLEGE OF THE SEQUOIAS
915 S. MOONEY BLVD
915 S MOONEY BLVD, VISALIA, CA 93277

DRAWING TITLE
LANDSCAPE PLANTING PLAN

PROJECT NO. 22-12498

DRAWING L200.2

David Bigler Associates
Landscape Architect #3887
1589 W Shaw Ave. #5
Fresno, California 93711
E Mail: davebigler @aol.com
Tel: (559) 276-9495
Fax: (559) 276-9497

\\tet-file1\Users\Gerardo.Juarez_TETR\Documents\12632-A-COS Promenade_gerardo.juarez7Z6UR.rvt

PARKING LOT #7 NEW SOLAR CANOPY SHADING CALCULATION

	100%	75%	50%	25%	Total
LARGE TREE (35' - 40')	962 SF	722 SF	481 SF	241 SF	
	0	0	0	0	
	0	0	0	0	
	0	0	0	0	
	0	0	0	0	
SHADE QUANTITY (SF)	0 SF	0 SF	0 SF	0 SF	0 SF
MEDIUM TREE (30' - 35')	707 SF	530 SF	354 SF	177 SF	
	0	0	0	0	
SHADE QUANTITY (SF)	0 SF	0 SF	0 SF	0 SF	0 SF
SMALL TREE (20' - 25')	452 SF	339 SF	226 SF	113 SF	
3. Existing Trees	0	0	0	0	
SHADE QUANTITY (SF)	0 SF	0 SF	0 SF	0 SF	0 SF
TOTAL TREE SHADING PROVIDED FOR REVISED EXISTING PARKING LOT #7					0 SF
TOTAL SOLAR CANOPY SHADING PROVIDED FOR REVISED EXISTING PARKING LOT #7					2,880 SF
TOTAL SHADING PROVIDED FOR REVISED EXISTING PARKING LOT #7					2,880 SF
TOTAL REVISED EXISTING PARKING LOT AREA					5,457 SF
PROJECT LANDSCAPE AND TREE SHADING PERCENTAGE (MIN. 50% REQ'D)					53%

PROJECT LANDSCAPE AND HARDSCAPE AREA SHADING CALCULATION

	100%	75%	50%	25%	Total
LARGE TREE (35' - 40')	962 SF	722 SF	481 SF	241 SF	
1. QUERCUS agrifolia	1	0	0	0	
2. QUERCUS virginiana	1	0	0	0	
3. Existing Trees	2	0	0	0	
SHADE QUANTITY (SF)	3,848 SF	0 SF	0 SF	0 SF	3,848 SF
MEDIUM TREE (30' - 35')	707 SF	530 SF	354 SF	177 SF	
4. ACER rubrum 'Armstrong'	7	0	0	0	
5. CERCIS canadensis texensis 'Oklahoma'	1	0	0	0	
6. PRUNUS cerasifera 'Krauter Vesuvius'	8	0	0	0	
7. ELAEOCARPUS decipiens	3	0	0	0	
SHADE QUANTITY (SF)	13,433 SF	0 SF	0 SF	0 SF	13,433 SF
SMALL TREE (20' - 25')	452 SF	339 SF	226 SF	113 SF	
8. LAGERSTROEMIA x 'Muskogee'	6	0	0	0	
9. SEQUOIA sempervirens 'Aptos Blue'	4	0	0	0	
10. ACER palmatum 'Sango Kaku'	1	0	0	0	
11. VITEX agnes-castes	1	0	0	0	
SHADE QUANTITY (SF)	5,424 SF	0 SF	0 SF	0 SF	5,424 SF
TOTAL TREE SHADING PROVIDED FOR PROJECT LANDSCAPE AND HARDSCAPE AREAS					22,705 SF
TOTAL PROJECT LANDSCAPE AND HARDSCAPE AREAS					91,272 SF
PROJECT LANDSCAPE AND TREE SHADING PERCENTAGE (MIN. 20% REQ'D)					25%

LANDSCAPE PLANTING LEGEND

SYMBOL	WATER USE	SIZE	DESCRIPTION
	Mod	1 Gal	LIRIOPE muscari, Blue Lily Turf.
	Low	1 Gal	TEUCRIUM cossonii, Gray Creeping Germander.
	Low	1 Gal	LANTANA Lemon Zest 'Bandana', Lemon Lantana. ?
	Low	1 Gal	BULBINE frutescens 'Tiny Tangerine', Dwarf Orange Bulbine.
	Low	1 Gal	TULBAGHIA violacea, Society Garlic.
	Low	1 Gal	LANTANA 'Spreading Lavender', Trailing Lavender Lantana.
	Low	5 Gal	LEUCOPHYLLUM zygophyllum 'Cimarron', Blue Ranger.
	Low	5 Gal	LANTANA 'New Gold', Golden Yellow Lantana.
	Mod	5 Gal	BERBERIS thunbergii 'Rose Glow', Rose Glow Barberry.
	Low	5 Gal	DIETES iridioides 'Lemon Drops', Hybrid Fortnight Lily.
	Low	5 Gal	NANDINA domestica 'Gulf Stream', Heavenly Bamboo.
	Mod	5 Gal	ROSA floribunda 'Iceberg', White Shrub Rose.
	Low	5 Gal	SALVIA greggii 'Purple', Purple Autumn Sage.
	Mod	5 Gal	COLEONEMA pulchellum 'Sunset Gold', Breath of Heaven.
	Low	1 Gal	MYOPORUM parvifolium 'Pink', Pink Myoporum.
	Mod	1 Gal	DIANELLA caerulea 'Cassa Blue', Flax.
	Mod	5 Gal	BERBERIS thunbergii 'Orange Rocket', Orange Rocket Barberry.
	Low	5 Gal	LANTANA 'Radiation', Orange Lantana Bush.
	Low	5 Gal	CAESALPINIA pulcherrima, Red Bird of Paradise.
	Low	5 Gal	RHAPHIOLEPIS umbellata 'Minor', Yeddo Hawthorn.
	Mod	5 Gal	LOROPETALUM chinense 'Burgundy', Loropetelum.
	Low	5 Gal	LEUCOPHYLLUM frutescens,'Compacta', Texas Ranger.
	Low	5 Gal	ERIGERON karvinskianus, Santa Barbara Daisy.
	Mod	5 Gal	RHAPHIOLEPIS indica 'Jack Evans', Indian Hawthorn.
	Low	5 Gal	CALLISTEMON viminalis 'Little John', Dwarf Bottle Brush.
	Low	5 Gal	TECOMA x 'Solar Flare', Solar Flare Tecoma.
	Low	15 Gal	COTINUS coggygria 'Royal Purple', Smoke Tree, Multi Trunk / Low Branch Form.
	Mod	15 Gal	MAGNOLIA soulagiana 'Alexandrina', Saucer Magnolia, Multi Trunk / Low Branch Form.
	Low	1 Gal	DIANELLA revoluta 'Little Rev', Little Rev Flax. Plant 36" (maximum) on center in a triangular pattern to fill designated areas. Contractor is to install plants 24" from perimeter concrete. Plants are to be installed in a neat geometric grid pattern to be uniform between adjacent planters.
	Low	1 Gal	MAHONIA repens, Creeping Mahonia. Plant 36" (maximum) on center in a triangular pattern to fill designated areas. Contractor is to install plants 24" from perimeter concrete. Plants are to be installed in a neat geometric grid pattern to be uniform between adjacent planters.
	Low	1 Gal	CAREX divulsa, Berkeley Sage. Plant 36" (maximum) on center in a triangular pattern to fill designated areas. Contractor is to install plants 24" from perimeter concrete. Plants are to be installed in a neat geometric grid pattern to be uniform throughout the planted area.
	Mod	Sodded Turf	Turfgrass - Celebration Hybrid Bermudagrass Sod as supplied by AG Sod, Jose Tamayo, (559) 478-9435, or approved equal. See specifications for additional information.
			Pump Yard: 3" Compacted Layer of Stabilized Gold Decomposed Granite as supplied by Rosenbalm's Rockery, Fresno, CA, or approved equal, installed over a compacted (90% relative compaction) subgrade. Excavate existing soil as required to achieve the design finish grade (top of DG) per site grading plans and slope to drain. Contractor is to install landscape weed control fabric below the decomposed granite. See Installation Detail #20 on Plan Sheet L402.2 and landscape specifications for additional information.
			Cobble Mulch: 4" minimum layer of washed "Cobble" mulch as supplied by Rosenbalm's Rockery, (559) 256-3900, located in Fresno, California or approved equal. Contractor is to evenly place 4" x 8" cobble over one half (1/2) of the designated area. Contractor is to place 2" x 4" cobble over the remaining one half (1/2) of the designated area to completely cover the area with a minimum depth of 4" of cobble mulch. Infill remaining voids with 1" x 2" Sunburst Cobble. Contractor to field verify. Contractor is to prepare the sub-grade for the gravel mulch with an application of an approved, long lasting, granular pre-emergent just prior to the placement of the gravel mulch at label rates. Contractor is to reapply (surface broadcast) a second application at the end of the specified maintenance period. Two (2) applications required for bid. Contractor is to maintain the area weed free and repair erosion areas weekly until final acceptance by the District.
			Existing Turf & Landscape Areas to Remain and Protect. Existing turf, plant material or trees that are damaged due to construction activities, vehicle damage, stress due to lack of water or other deterioration of the existing areas to remain are to be restored by the Contractor to the existing condition prior to the project at no additional cost to the District. This includes damage that may occur at any area of the campus. In disturbed areas, the Contractor is to fill and grade low and depressed areas with clean sandy topsoil and hydroseed existing turf areas to match the adjacent existing turf. In shrub areas, after grading as described above, the Contractor is to repair any damage and replace any stressed or damaged plant material to match the existing. The Contractor is responsible for sodding over trenches and all disturbed turf areas due to any construction activities. Contractor is to maintain sodded and repaired landscape areas until fully established and weed free, a minimum of 90 days or until accepted by the District.

LANDSCAPE PLANTING LEGEND

SYMBOL	WATER USE	SIZE	DESCRIPTION
	Mod	36" Box	SEQUOIA sempervirens 'Aptos Blue', Coast Redwood Tree.
	Low	36" Box	VITEX agnes castes, Vitex Tree, Multi / Low Branching Form.
	Mod	36" Box	ACER palmatum 'Sango Kaku', Coral Bark Maple Tree, Multi / Low Branching Form.
	Mod	24" Box	CERCIS canadensis texensis 'Oklahoma', Oklahoma Red Bud, Standard Form.
	Mod	24" Box	ACER rubrum 'Armstrong', or 'Bowhall', Red Maple Tree, Standard Form.
	Low	36" Box	LAGERSTROEMIA x 'Muskogee', Lavender Crape Myrtle, Multi / Low Branching Form.
	Mod	24" Box	PRUNUS cerasifera 'Krauter Vesuvius', Purple Leaf Plum Tree, Standard Form.
	Mod	24" Box	ELAEOCARPUS decipiens, Japanese Blueberry Tree, Standard Form.
	Low	48" Box	QUERCUS agrifolia, Coast Live Oak Tree, Multi / Low Branching Form.
	Low	48" Box	QUERCUS virginiana, Southern Live Oak Tree, Standard Form.
			Existing Tree to Remain & Protect.

SEE LANDSCAPE PLANTING DETAIL #16 ON PLAN SHEET L401.2

TOPDRESSING MULCH INSTALLATION NOTE: PERIMETER "LOCK TRENCH" FOR TOPDRESSING MULCH AREAS - CONTRACTOR IS TO LOWER THE EXISTING GRADE AT ALL PERIMETER AREAS WHERE TOPDRESSING MULCH AREAS ARE ADJACENT TO PERIMETER CURB, SIDEWALK OR UTILITY VAULTS OR ANY OTHER HARDSCAPED SURFACE: WALK ON BARK AREAS (3") BELOW THE TOP OF ADJACENT HARDSCAPE SURFACE OVER ONE FOOT (1'-0" WIDTH) AND THEN TAPER TO EXISTING GRADE IN A GENTLE MANNER OVER A ONE TO TWO FOOT AREA (1'-0" - 2'-0") AS REQUIRED. EDGE GRADING WORK IS TO "LOCK" THE TOPDRESSING MULCH IN PLACE TO ELIMINATE MULCH MIGRATION AND LOSS. CONTRACTOR IS TO REMOVE "LOCK TRENCH" SPOILS AND EXTRA SOIL OFF SITE AS PART OF THE BID OR INCORPORATE INTO SITE GRADING. ALL NON TURF LANDSCAPE AREAS ARE TO RECEIVE A 3" COMPACTED DEPTH OF PREMIUM WALK ON BARK AS SUPPLIED BY SUPERIOR SOIL SUPPLIMENTS, OR APPROVED EQUAL. CONTRACTOR IS TO FIELD VERIFY. SEE INSTALLATION DETAIL #24 ON PLAN SHEET L402.2 FOR ADDITIONAL INFORMATION.

LANDSCAPE PLANTING KEYNOTES

1. CONTRACTOR TO INSTALL 3" LAYER OF WALK ON BARK TOPDRESSING MULCH IN DESIGNATED AREA ADJACENT TO THE BUILDING COLUMN. NO PLANTING AND NO IRRIGATION IS TO BE INSTALLED IN THIS AREA.

IDENTIFICATION STAMP
DIV. OF THE STATE ARCHITECT
APP: 02-122821 INC: 2
REVIEWED FOR
SS ☑ FLS ☑ ACS ☑
DATE: 11/20/2025

Teter, Inc. expressly reserves its common law copyright and other property rights in these plans. This document, the ideas and designs incorporated herein, as an instrument of professional service, is not to be used in whole or part, for any purpose without prior written authorization.

MARK	DATE	DESCRIPTION
A	11/13/2025	DSA BACKCHECK

LANDSCAPE ARCHITECT — DAVID B. BIGLER — RLA # 3887 — 31 JULY 26 — RENEWAL — STATE OF CALIFORNIA

TETER, INC.
FRESNO HEADQUARTERS
VISALIA|| BAKERSFIELD | MODESTO | SAN LUIS OBISPO
ARCHITECTS ENGINEERS CONNECTED

VISALIA CAMPUS UNIVERSITY CENTER
COLLEGE OF THE SEQUOIAS
915 S. MOONEY BLVD
915 S MOONEY BLVD, VISALIA, CA 93277

DRAWING TITLE
LANDSCAPE PLANTING LEGEND

PROJECT NO. 22-12498

DRAWING L201.2

David Bigler Associates
Landscape Architect #3887
1589 W Shaw Ave, #5
Fresno, California 93711
E Mail: davebigler @aol.com
Tel: (559) 276-9495
Fax: (559) 276-9497

\\tetr-file1\Users\Gerardo.Juarez_TETR\Documents\12832-A-COS Promenade_gerardo.juarez7Z6UR.rvt

IDENTIFICATION STAMP
DIV. OF THE STATE ARCHITECT
APP: 02-122821 INC: 2
REVIEWED FOR
SS ☑ FLS ☑ ACS ☑
DATE: 11/20/2025

Teter, Inc. expressly reserves its common law copyright and other property rights in these plans. This document, the ideas and designs incorporated herein, as an instrument of professional service, is not to be used in whole or in part, for any other project without prior written authorization.

MARK	DATE	DESCRIPTION
A.	11/13/2025	DSA BACKCHECK

LANDSCAPE ARCHITECT — DAVID S. BIGLER — RLA # 3887 — 31 JULY 26 — STATE OF CALIFORNIA

TETER, INC.
FRESNO HEADQUARTERS
VISALIA|| BAKERSFIELD | MODESTO | SAN LUIS OBISPO
ARCHITECTS ENGINEERS CONNECTED

VISALIA CAMPUS UNIVERSITY CENTER
COLLEGE OF THE SEQUOIAS
915 S. MOONEY BLVD
915 S MOONEY BLVD, VISALIA, CA 93277

DRAWING TITLE
LANDSCAPE IRRIGATION PLAN

PROJECT NO. 22-12498

DRAWING L300.2

LIVE OAK

FOSTERS FREEZE

EXISTING PARKING

(E) BUILDING

UNIVERSITY CENTER
UNDER (INCREMENT 2)

UNIVERSITY SQUARE

SOUTH MOONEY BLVD

W TULARE AVENUE

SEE LANDSCAPE IRRIGATION LEGEND & KEYNOTES ON PLAN SHEET L301.2

NORTH

1" = 20'-0"

David Bigler Associates
Landscape Architect #3887
1589 W Shaw Ave, #5
Fresno, California 93711
E Mail: davebigler @aol.com
Tel: (559) 276-9495
Fax: (559) 276-9497

PLOT DATE: 10/1/2024 4:12:03 PM

LANDSCAPE IRRIGATION PLAN

IRRIGATION KEYNOTES

(1) EXISTING REMOTE CONTROL VALVE TO REMAIN AND PROTECT AND MAINTAIN EXISTING CONTROLLER ASSIGNMENT ON REPLACEMENT CONTROLLER 'C'. CONTRACTOR TO FIELD VERIFY.

(2) EXISTING REMOTE CONTROL VALVE TO BE REMOVED, RELOCATED AND REPLACED. INSTALL NEW REMOTE CONTROL VALVE ON THE NEW IRRIGATION MAINLINE PIPE AND CONNECT TO THE EXISTING LATERAL PIPE FOR THE NEW / EXISTING SPRINKLERS. CONTRACTOR IS TO INSTALL NEW 2-WIRE PATH CONTROL WIRING WITH DECODER TO EXISTING 2-WIRE CONTROLLER 'B2'. CONTRACTOR IS TO REMOVE EXISTING LOW VOLTAGE CONTROL WIRING FROM THE WIRE BLOCK OF CONTROLLER 'C' FOR VALVES TRANSITIONED TO CONTROLLER 'B2'. SEE IRRIGATION DEMOLITION PLAN L101.2 FOR ADDITIONAL INFORMATION. CONTRACTOR TO FIELD VERIFY.

(3) IRRIGATION POINT OF CONNECTION: CONTRACTOR IS TO CONNECT NEW IRRIGATION MAINLINE PIPE TO EXISTING IRRIGATION MAINLINE PIPE TO REMAIN IN SERVICE AT THE LOCATIONS INDICATED. EXISTING MAINLINE PIPE ROUTING IS DIAGRAMMATIC, AND CONTRACTOR IS TO FIELD LOCATE TO DETERMINE POINTS OF CONNECTION IN THE FIELD. SEE IRRIGATION DEMOLITION PLAN L101.2 FOR ADDITIONAL INFORMATION. CONTRACTOR IS TO IDENTIFY EXISTING LOW VOLTAGE CONTROL WIRING THAT TRAVERSES THROUGH THE PROJECT TO EXISTING CONTROLLER 'C' AND IS TO INTERCEPT, SPLICE AND EXTEND IT ADJACENT TO THE NEW IRRIGATION MAINLINE PIPE AS REQUIRED TO NEW REPLACEMENT CONTROLLER 'C'. CONTRACTOR IS TO INSTALL NEW 2-WIRE PATH CONTROL WIRING TO REMOTE CONTROL VALVES IN THE PROJECT AREA WHERE NEW REMOTE CONTROL VALVES ARE INSTALLED OR REPLACED TO DESIGNATED CONTROLLER 'B2'. ALL REPLACEMENT CONTROLLER 'C' LOW VOLTAGE CONTROL WIRING IS TO BE NEW FROM THE POC LOCATIONS TO THE NEW REPLACEMENT CONTROLLER 'C' AND IS CONVENTIONAL AND IS DIRECT BURIAL. CONTRACTOR IS TO TRACE ALL EXISTING LOW VOLTAGE CONTROL WIRING FOR CONTROLLER 'C' IN THE FIELD TO DETERMINE THE BEST LOCATION TO INTERCEPT EXISTING CONTROL WIRES AS NOTED ABOVE. CONTRACTOR IS TO REMOVE EXISTING LOW VOLTAGE CONTROL WIRING FROM THE WIRE BLOCK OF CONTROLLER 'C' FOR VALVES TRANSITIONED TO CONTROLLER 'B2'. CONTRACTOR TO FIELD VERIFY.

(4) CONTRACTOR IS TO FIELD LOCATE EXISTING LATERAL PIPE AND CONNECT TO NEW LATERAL PIPE AS SHOWN. CONTRACTOR TO FIELD VERIFY.

(5) IRRIGATION POINT OF CONNECTION: CONTRACTOR IS TO CONNECT NEW IRRIGATION MAINLINE PIPE TO EXISTING IRRIGATION MAINLINE PIPE TO REMAIN IN SERVICE AT THE LOCATIONS INDICATED. EXISTING MAINLINE PIPE ROUTING IS DIAGRAMMATIC, AND CONTRACTOR IS TO FIELD LOCATE TO DETERMINE POINTS OF CONNECTION IN THE FIELD. SEE IRRIGATION DEMOLITION PLAN L101.2 FOR ADDITIONAL INFORMATION. CONTRACTOR IS TO IDENTIFY EXISTING 2-WIRE CONTROL WIRING THAT IS STUBBED ADJACENT TO THE EXISTING IRRIGATION MAINLINE PIPE STUB FROM EXISTING 2-WIRE IRRIGATION CONTROLLER 'B2'. CONTRACTOR IS TO INSTALL NEW 2-WIRE CONTROL WIRING TO REMOTE CONTROL VALVES IN THE PROJECT AREA WHERE NEW REMOTE CONTROL VALVES ARE INSTALLED OR REPLACED TO EXISTING CONTROLLER 'B2'. CONTRACTOR TO FIELD VERIFY.

(6) IRRIGATION POINT OF CONNECTION: CONTRACTOR IS TO CONNECT NEW IRRIGATION MAINLINE PIPE TO DISCHARGE SIDE OF THE NEW REDUCED PRESSURE BACKFLOW PREVENTION DEVICE INSTALLED BY SITE UTILITY CONTRACTOR. SEE SITE CIVIL PLANS FOR ADDITIONAL INFORMATION. CONTRACTOR TO FIELD VERIFY AND COORDINATE WORK WITH OTHER TRADES.

(7) CONTRACTOR IS TO FIELD LOCATE THE EXISTING LATERAL PIPE INDICATED AND CAP AS SHOWN ON THE PLAN. CONTRACTOR TO FIELD VERIFY.

(8) CONTRACTOR TO INSTALL 3" LAYER OF WALK ON BARK TOPDRESSING MULCH IN DESIGNATED AREA ADJACENT TO THE BUILDING COLUMN. NO PLANTING AND NO IRRIGATION IS TO BE INSTALLED IN THIS AREA.

LATERAL PIPE SIZING CHART

SPRINKLER FLOW RATE CHART		
SYMBOL	RESPECTIVE FLOW RATE (GPM)	
●⊕○	0.25 GPM, 0.5 GPM, 0.5 GPM	
	0.39 GPM, 0.5 GPM, 0.75 GPM, 1.49 GPM	
	0.59 GPM, 0.77 GPM, 1.2 GPM, 2.36 GPM	
	0.39 GPM, 0.5 GPM, 0.75 GPM, 1.49 GPM, 0.37 GPM	
	0.43 GPM	
	4.0 GPM/8.0 GPM	
	4.3 GPM, 4.3 GPM	
	8.3 GPM, 8.3 GPM	
	10.1 GPM, 10.1 GPM	
LATERAL PIPE SIZING CHART	PIPE SIZE	ALLOWABLE FLOW (GPM)
	1"	0 - 12.0
	1 1/2"	12.1 - 30.0
	2"	30.1 - 55.0

NOTE: CONTRACTOR TO USE SPECIFIED NOZZLE RATING (GPM) FOR LATERAL PIPE SIZE CALCULATIONS AS SHOWN IN THE SPRINKLER FLOW RATE CHART. FLOW RATINGS (GPM) ARE TO BE USED AT THE 50 PSI PRESSURE. FLOW VELOCITIES OF FOUR FEET PER SECOND SHALL NOT BE EXCEEDED. PIPE SIZES NOTED ON THE PLAN SHALL SUPERCEDE CALCULATED PIPE SIZES BY THE CONTRACTOR. LANDSCAPE ARCHITECT TO REVIEW ALL PIPE SIZING IN THE FIELD PRIOR TO BACKFILL OF ANY TRENCHES. CONTRACTOR TO SUBMIT A SHOP DRAWING FOR REVIEW AND APPROVAL PRIOR TO TRENCHING.

LANDSCAPE IRRIGATION LEGEND

SYMBOL	DESCRIPTION
	Existing Sprinklers to Remain & Protect. Contractor to field verify.
	Existing Remote Control Valve to Remain & Protect. Contractor to field verify.
	Existing Remote Control Gate Valve to Remain & Protect, unless otherwise noted. See Keynotes and Landscape Irrigation Plan, L300.2 for additional information. Contractor to field verify.
	Existing Lateral Pipe to Remain & Protect. Routing shown is diagrammatic. Contractor is to pot hole and field locate all relevant existing irrigation improvements that affect construction activities. Sections of the existing lateral pipe are being taken out of service. Lateral piping being taken out of service is to be removed where it interfere's with construction activities, or is located below the proposed buildings, otherwise existing lateral piping being taken out of service may be abandoned below grade. Modify as required for the project. Contractor to field verify.
	Existing Drip Pipe to Remain & Protect. Sections of the existing drip pipe are being taken out of service. Drip piping being taken out of service is to be removed where it interfere's with construction activities, otherwise existing drip piping being taken out of service is to be removed and disposed of off site at an approved disposal site. Modify as required for the project. Contractor to field verify.
	Existing Irrigation Mainline (Remain & Protect): Routing shown is diagrammatic. Contractor is to pot hole and field locate all relevant existing irrigation improvements that affect construction activities. Sections of the existing mainline pipe are to remain and protect and other sections are being taken out of service. Contractor is to field verify existing conditions prior to bid to determine the final extent of work. Contractor to field verify.
	Existing Irrigation Communication Cable (Existing Controller 'B2'): Rainmaster 2-wire communication cable #TW-CAB-14 (Black & Red) installed in 1 1/2" PVC Schedule 40 Electrical conduit with sweep ells into all valve boxes. Routing shown is diagrammatic. Contractor is to pot hole and field locate all relevant existing irrigation improvements that affect construction activities. Contractor is to field verify existing conditions prior to bid to determine the final extent of work. Contractor to field verify.
C-12 UNK	Existing Controller # / Station # Gallons per minute (UNK = GPM for existing valves is Unknown)
B2	Existing Irrigation Controller 'B2' to Remain and Protect. Existing Controller 'B2' is a Rainmaster Eagle Plus 2-wire controller. Contractor to field verify.
E	Existing Irrigation Controller 'E' to Remain and Protect. Existing Controller 'E' is an Irritrol MC-18E wall mount with all 18 stations in use. Contractor to field verify.
NOT SHOWN	Existing Irrigation Controllers 'A', 'B', 'D' and 'F' are to Remain & Protect located in the campus areas north of this project. Contractor to field verify.
	Existing Irrigation Improvements to Remain and Protect. All areas adjacent to the project area have existing Irrigation Improvements to Remain & Protect. Contractor is to repair all damage to existing improvements that are intended to remain & protect to match existing improvements. Damage may be a direct or indirect result of their work or may be caused by neglect. Contractor to field verify.
C	Replacement Controller: Rain Master #EGP-16i-SPED Eagle Plus 16 station Controller with Stainless Steel locking Pedestal. 16 station traditional wired controller that is network ready via iCard cellular modem. In addition to the 5 years standard service with controller purchase, Contractor is to provide five (5) additional years of premium iCentral Service via cellular modem (#RM-ISVC-5Y, 5 year service access plan). District to approve installation location in the field prior to installation. Remove and replace existing Controller 'C'. Deliver removed controller to District. Contractor to field verify existing conditions prior to bid. Controller electrical source is existing and is to be modified as required for the new replacement controller with all improvements constructed to code. Contractor is responsible for all data collection, data input and programming for a complete installation in compliance with the manufacturers recommendations. See Installation Detail #18 on Plan Sheet L401.2 & Details #19 & #21 on Plan Sheet L402.2 for additional information.
G	Rain Master #EGP-TWi, Eagle Plus 2-Wire Controller with painted steel locking wall mount cabinet. 200 station 2-wire controller that is network ready via iCard cellular modem. In addition to the 5 years standard service with controller purchase, Contractor is to provide five (5) additional years of premium iCentral Service via cellular modem (#RM-ISVC-5Y, 5 year service access plan). District to approve installation location in the field prior to installation. See Installation Details #28 & #29 on Plan Sheet L403.2 for additional information.
NOT SHOWN	Rain Master Eagle Plus Central Control System: Contractor is responsible for all data collection, data input and programming for a complete installation in compliance with the manufacturers recommendations for active weather control of the irrigation system on the cloud based central. Contractor is to assist and train up to four (4) designated District Maintenance staff in the programming and operation of the irrigation controller and Rainmaster Eagle Plus Central Control System with remote maintenance access from the Rainmaster PROMAX remote radio system and from the existing cellular smart phones of the District Maintenance Staff.
NOT SHOWN	Provide two (2) Rainmaster #PROMAX remote radio kits for remote access to the irrigation controllers and Eagle Plus Central Irrigation Controller system to the District.
BFP 01	4" Irrigation Reduced Pressure Backflow Prevention Device to be installed by Site Utility Contractor, see Site Civil / Utility Plan. Landscape Contractor to coordinate all work as required. See Site Civil Plans.
PMP 01 P	Irrigation Booster Pump: Watertronics #WMBV-5000-7A-15-480-3-220-75, Irrigation booster pump capable of 220 gpm at 60 - 70 psi boost with a minimum dynamic inlet pressure of 10 psi. Pump station is to feature VFD controls with a regulated set point discharge pressure of 75 psi. Pressure set point may be adjusted within a 10 psi range by user input. Pump station is to have a marine grade aluminum enclosure and base, unpainted painted installed on a 8" thick concrete slab with #4 rebar reinforcement installed in a 12 inch (12") square grid. Pump station concrete slab is to be a minimum of 12" larger than the pump station enclosure footprint on each side. See Installation Detail #30 on Plan Sheet L404.2 for additional information.
	1" Irritrol #100P1-S, 100-S Series Electric Remote Control Scrubber Valve w/ pressure regulation #OMR-100-DS. Install one valve per standard rectangular valve box. Mainline schedule 80 nipple entering the valve is to be the same size as the lateral exiting the valve. Contractor is to install line size filter on all pop up spray sprinkler and low flow pop up bubbler valves in separate valve box adjacent to each other. Filters are to be installed on discharge side of valve. See Installation Detail #25 on Plan Sheet L403.2 for additional information.
	1 1/2" Irritrol #100P1.5-S, 100-S Series Electric Remote Control Scrubber Valve w/ pressure regulation #OMR-100-DS. Install one valve per standard rectangular valve box. Mainline schedule 80 nipple entering the valve is to be the same size as the lateral exiting the valve. Contractor is to install line size filter on all pop up spray sprinkler and low flow pop up bubbler valves in separate valve box adjacent to each other. Filters are to be installed on discharge side of valve. See Installation Detail #26 on Plan Sheet L403.2 for additional information.
	2" Irritrol #100P2-S, 100-S Series Electric Remote Control Scrubber Valve w/ pressure regulation #OMR-100-DS. Install one valve per standard rectangular valve box. Mainline schedule 80 nipple entering the valve is to be the same size as the lateral exiting the valve. Contractor is to install line size filter on all pop up spray sprinkler and low flow pop up bubbler valves in separate valve box adjacent to each other. Filters are to be installed on discharge side of valve. See Installation Detail #27 on Plan Sheet L403.2 for additional information.
	1" Crispin #IC-10, Air and Vacuum Release Valve to be installed at high points and dead end runs of the mainline piping system. Install in a standard rectangular valve box. Contractor to field locate. See Installation Detail #09 on Plan Sheet L400.2 for additional information.
	2" thru 3": Nibco #T-113 IRR BHW, Bronze Gate Valve with Non-Rising Stem. 4" and Larger: Nibco # P619-RW, Resilient Seat Gasketed Joint Gate Valve, 200 psi. Gate Valves are to be line size and installed in a 10" round valve box. Provide two (2) square operating nut handles (4' min. length) for each type required to the District. See Installation Details #10 & #11 on Plan Sheet L400.2 for additional information.
	Rainbird 44LRC, Quick Coupling Valve. Provide District with five (5) quick coupler keys with hose swivels. Install in 10" round valve box. See Installation Detail #12 on Plan Sheet L400.2 for additional information.
G-01 3.0	Controller # / Station # Gallons per minute (UNK - Valve flow rate is unknown)

LANDSCAPE IRRIGATION LEGEND

SYMBOL	DESCRIPTION
	Hunter #PROS-04-PRS30-CV-F-MSBN-50Q, 4" pop-up sprinkler with check valve, flow guard and Hunter PC Multi Stream Bubbler Nozzle. (½" inlet: 0.50 gpm @ 30 psi). Install on uphill side of plant or tree. See Installation Detail #01 on Plan Sheet L400.2 for additional information.
	Hunter #RZWS-36-50-CV with 0.5 gpm pressure compensating bubbler Root Watering System. Install on uphill side of plant or tree. See Installation Detail #03 on Plan Sheet L400.2 for additional information.
	Hunter #PROS-04-PRS30-CV-F-MSBN-25Q, 4" pop-up sprinkler with check valve, flow guard and Hunter PC Multi Stream Bubbler Nozzle. (½" inlet: 0.25 gpm @ 30 psi). Install on uphill side of plant or tree. See Installation Detail #01 on Plan Sheet L400.2 for additional information.
	Hunter #PROS-06-PRS30-CV-F, 6" Pop-up Sprinkler with check valve, flow guard and Toro 12' radius pressure compensating Precision Series nozzles, O-12-QP, O-12-TP, O-12HP & O-12FP patterns. Contractor is to adjust arc and radius to prevent overspray onto buildings and other hardscaped surfaces. If nozzle radius adjustment required is greater than 10% of nozzle rating, the contractor is to substitute nozzle with 8', 10' or specialty pattern nozzle as required at no additional cost to Owner. Contractor is to review nozzle substitutions with Landscape Architect for comment, prior to installation. See Installation Detail #02 on Plan Sheet L400.2 for additional information.
	Hunter #PROS-06-PRS30-CV-F, 6" Pop-up Sprinkler with check valve, flow guard and Toro 15' radius pressure compensating Precision Series nozzles, O-15-QP, O-15-TP, O-15HP & O-15-FP patterns. Contractor is to adjust arc and radius to prevent overspray onto buildings and other hardscaped surfaces. If nozzle radius adjustment required is greater than 10% of nozzle rating, the contractor is to substitute nozzle with 10', 12' or specialty pattern nozzle as required at no additional cost to Owner. Contractor is to review nozzle substitutions with Landscape Architect for comment, prior to installation. See Installation Detail #02 on Plan Sheet L400.2 for additional information.
	Hunter #PROS-12-PRS30-CV-F, 12" Pop-up Sprinkler with check valve, flow guard and Toro 12' radius pressure compensating Precision Series nozzles, O-12-QP, O-12-TP, O-12HP & O-12FP patterns. Contractor is to adjust arc and radius to prevent overspray onto buildings and other hardscaped surfaces. If nozzle radius adjustment required is greater than 10% of nozzle rating, the contractor is to substitute nozzle with 8', 10' or specialty pattern nozzle as required at no additional cost to Owner. Contractor is to review nozzle substitutions with Landscape Architect for comment, prior to installation. See Installation Detail #04 on Plan Sheet L400.2 for additional information.
	Hunter #PROS-12-PRS30-CV-F, 12" Pop-up Sprinkler with check valve, flow guard and Toro Precision Series Special Pattern nozzle, O-4X18-SSTP pattern. Contractor is to adjust arc and radius to prevent overspray onto buildings and other hardscaped surfaces. If nozzle radius adjustment required is greater than 10% of nozzle rating, the contractor is to substitute nozzle with 8', 10' or specialty pattern nozzle as required at no additional cost to Owner. Contractor is to review nozzle substitutions with Landscape Architect for comment, prior to installation. See Installation Detail #04 on Plan Sheet L400.2 for additional information.
	Hunter #PROS-06-PRS40-CV-F, 6" Pop-up 40 psi Sprinkler with check valve, flow guard and MP Rotator #MP2000-90 rotating nozzle with adjustable arc 90 degrees thru 210 degrees. Contractor is to adjust arc and radius to prevent overspray onto buildings and other hardscaped surfaces. If nozzle radius adjustment required is greater than 10% of nozzle rating, the contractor is to substitute nozzle with 800 or 1000 series as required at no additional cost to Owner. Contractor is to review nozzle substitutions with Landscape Architect for comment, prior to installation. See Installation Detail #06 on Plan Sheet L400.2 for additional information.
	Hunter # I-20-12-04/08, 12" pop up I-20 Series Rotor Sprinkler with part / full circle arcs, plastic riser and check valve with #4.0 and #8.0 nozzles. (3/4" inlet: 4.0 / 8.0 gpm @ 45 psi). Contractor is to use 4.0 nozzle for full circle arcs. For part circle arcs, Contractor is to use 4.0 nozzle for rotor spacings 24 ft and less and is to use 8.0 nozzle for rotor spacings 25 ft and greater. See Installation Detail #08 on plan sheet L400.2 for additional information.
	Hunter # I-25-06-SS-04, 6" pop up I-25 Series Rotor Sprinkler with part / full circle arcs, stainless steel riser and check valve with #4.0 nozzle. (1" inlet: 4.3 gpm @ 50 psi). See Installation Detail #07 on plan sheet L400.2 for additional information.
	Hunter # I-25-06-SS-08, 6" pop up I-25 Series Rotor Sprinkler with part / full circle arcs, stainless steel riser and check valve with #8.0 nozzle. (1" inlet: 8.3 gpm @ 50 psi). See Installation Detail #07 on plan sheet L400.2 for additional information.
	Hunter # I-25-06-SS-10, 6" pop up I-25 Series Rotor Sprinkler with part / full circle arcs, stainless steel riser and check valve with #10.0 nozzle. (1" inlet: 10.1 gpm @ 50 psi). See Installation Detail #07 on plan sheet L400.2 for additional information.
	1" thru 2": PVC Class 200 Solvent Weld lateral pipe. Sleeve all pipe under paved surfaces over eight feet wide with PVC Schedule 40 pipe a minimum of two times larger than the pipe being sleeved. One pipe per sleeve only. Minimum sleeve size is 2". Wires are to be sleeved separately from pipe. Size lateral piping as noted on the lateral pipe sizing chart, for additional information. Pipe sizing is not to exceed 4.0 feet per second flow velocity. Install all pipe in strict accordance with manufacturers instructions, using appropriate cement and primer for the various pipe sizes and prevailing site conditions. (Note: 1/2", 3/4" & 1 1/4" pipes are not allowed to be used on the project.) See Installation Detail #14 & #15 on plan sheet L401.2 for additional information.
	2" thru 3" PVC Schedule 40 SW Mainline Pipe. Mainline pipe fittings are to be PVC Schedule 80 solvent weld fittings or PVC Schedule 80 TOE nipples. 4" PVC Class 200 Gasketed Mainline Pipe. Mainline pipe fittings are to be ductile iron Leemco gasketed fittings or Romac #202NS service saddle with double stainless steel straps, except where the irrigation details call for a specific fitting. Size Mainline Piping as noted on the plan. Install all pipe in strict accordance with manufacturers instructions. For mainlines 3" and larger install concrete thrust blocks at all changes in direction. No bending, or curving of the pipe will be allowed, except as permitted by the pipe manufacturer. Pipe manufacturer must be approved prior to installation. Use mechanical joint restraints where concrete thrust blocks are not applicable, such as vertical changes in direction, or when two pipelines are side by side. See Installation Details #13, #14 & #15 on Plan Sheet L401.2 for additional information.
	IRRIGATION COMMUNICATION CABLE: RAINMASTER 2-WIRE COMMUNICATION CABLE #TW-CAB-14 (Black & Red) installed in 1 1/2" PVC Schedule 40 Electrical conduit with sweep ells into all valve boxes with junction boxes located every one hundred fifty feet (150'), at all changes in direction and at all splices and dead end stubs for future extension. Junction boxes are to be heavy duty 12" standard rectangular valve boxes with locking covers except for splices made in remote control valve boxes. All decoder splices are to be located in valve box with remote control valves, or in junction boxes (12" standard rectangular valve box) where splices are required away from remote control valve boxes. All splices not related to a valve decoder are to be labeled on As-Built Plans. All 2-Wire splices are to be made with RainMaster #TW-SPLICE-14 waterproof splice kits. See Installation Detail #17 on Plan Sheet L401.2, Details #22 & #23 on Plan Sheet L402.2 and Details #25, #26 & #27 on Plan Sheet L403.2 for additional information.
	2-Wire Decoder to Remote Control Valve Wiring: Standard 14 AWG Irrigation Low Voltage Control wiring with single copper conductor (solid) with direct burial insulation. Install one "hot" wire and one "common" wire from each remote control valve to the designated Decoder. Contractor is to install the 14 AWG remote control valve wires in 1" PVC electrical conduit with sweep ells into all valve boxes as required. Remote Control Valve Wiring is to be in its own dedicated 1" PVC electrical conduit and is not to be installed in the 2-Wire path conduit. All splices are to be made with Rainmaster #TW-SPLICE-14 waterproof splice kits. One inch (1") is the minimum size conduit and Contractor is to size conduit as required. See Installation Details #25, #26 & #27 on Plan Sheet L403.2 for additional information.
(1) (2) (4)	Rain Master 2-Wire Decoders: 1 Station Decoder (#TW-D-1), 2 Station Decoder (#TW-D-2) & 4 Station Decoder (#TW-D-4), respectively. All decoders are to be installed in a valve box. Zip tie decoder to a 1" PVC Schedule 40 stake to elevate the decoder off the bottom of the valve box. Contractor is to loop all wiring to the decoder so decoder can be elevated a minimum of three feet above grade for ease of service. All wire splices are to be made with Rain Master #TW-SPLICE-14 splice kits. See Installation Details #25, #26 & #27 on Plan Sheet L403.2 for additional information.
	Rainmaster #TW-LA-1 Line Surge Protector, Two Wire Path Grounding. See Installation Detail #22 on Plan Sheet L402.2 for additional information.

LANDSCAPE IRRIGATION LEGEND

NTS 7

David Bigler Associates
Landscape Architect #3887
1589 W Shaw Ave, #5
Fresno, California 93711
E Mail: davebigler @aol.com
Tel: (559) 276-9495
Fax: (559) 276-9497

IDENTIFICATION STAMP
DIV. OF THE STATE ARCHITECT
APP: 02-122821 INC: 2
REVIEWED FOR
SS ☑ FLS ☑ ACS ☑
DATE: 11/20/2025

Teter, Inc. expressly reserves its common law copyright and other property rights in these plans. This document, the ideas and designs incorporated herein, as an instrument of professional service, is not to be used in whole or in part, for any other project without prior written authorization.

MARK	DATE	DESCRIPTION
A	11/13/2025	DSA BACKCHECK

LICENSED LANDSCAPE ARCHITECT
DAVID B. BIGLER
RLA # 3887
31 JULY 26
RENEWAL DATE
STATE OF CALIFORNIA

TETER, INC.
FRESNO HEADQUARTERS
VISALIA | BAKERSFIELD | MODESTO | SAN LUIS OBISPO
ARCHITECTS ENGINEERS CONNECTED

VISALIA CAMPUS UNIVERSITY CENTER
COLLEGE OF THE SEQUIOAS
915 S. MOONEY BLVD
915 S MOONEY BLVD, VISALIA, CA 93277

DRAWING TITLE
LANDSCAPE IRRIGATION LEGEND

PROJECT NO. 22-12498

DRAWING
L301.2

\\tetr-file1\Users\Gerardo.Juarez_TETR\Documents\12632-A-COS Promenade_gerardo.juarez7Z6UR.rvt
PLOT DATE: 10/1/2024 4:12:03 PM

\\tetr-file1\Users\Gerardo.Juarez_TETR\Documents\12632-A-COS Promenade_gerardo.juarez7Z6UR.rvt

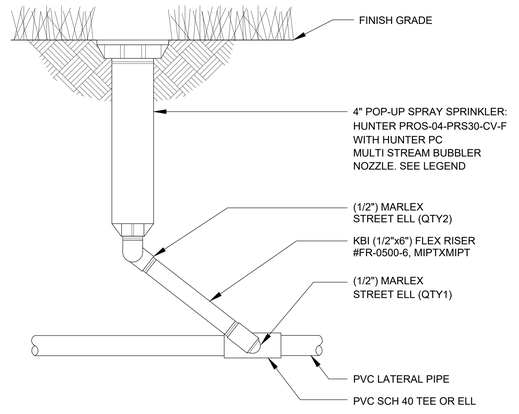

NOTE: SEE MANUFACTURERS INSTALLATION INSTRUCTIONS

01 4" POP-UP BUBBLER NTS

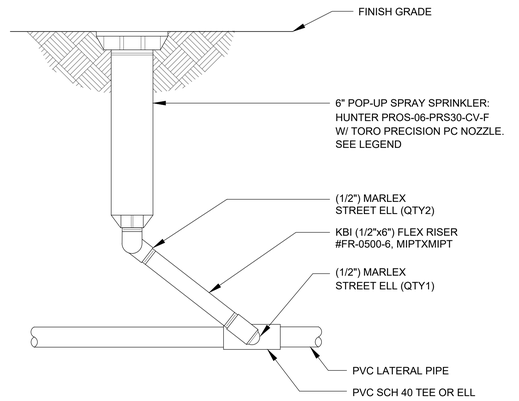

NOTE: SEE MANUFACTURERS INSTALLATION INSTRUCTIONS

02 6" POP-UP SPRAY SPRINKLER NTS

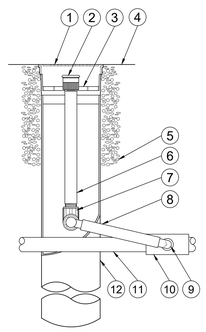

1. 4-INCH GRATE
2. BUBBLER: HUNTER - 0.5 GPM
3. ROOT WATERING SYSTEM: HUNTER #RZWS-36-50-CV (INCLUDES 0.5 GPM BUBBLER WITH RISER, GRATE, SWING ASSEMBLY, 1/2" MALE NPT INLET, AND BASKET CANISTER)
4. FINISH GRADE
5. PEA GRAVEL - 1.0 cu. ft.
6. 1/2-INCH PVC SCH 80 NIPPLE
7. 1/2-INCH 90-DEGREE ELBOW
8. 12-INCH SWING ASSEMBLY
9. 1/2-INCH MALE NPT INLET
10. PVC SCH 40 TEE OR EL
11. LATERAL PIPE
12. 4-INCH BASKET WEAVE CANISTER

NOTE: INSTALL ROOT WATERING SYSTEM WITH BUBBLER INSIDE THE TREE WATERING BASIN AND INSIDE THE TREE ROOT BARRIER ON THE UPHILL SIDE OF TREE, IF FINISH GRADE IS SLOPED INSTALL RWS-90CK IN SANDY SOILS.

03 ROOT WATERING TREE BUBBLER NTS

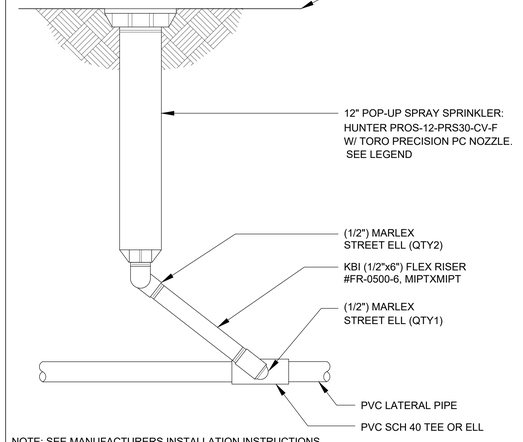

NOTE: SEE MANUFACTURERS INSTALLATION INSTRUCTIONS

04 12" POP-UP SPRAY SPRINKLER NTS

FILTER SIZE CHART

VALVE SIZE	FILTER SIZE	FILTER MODEL
1"	1"	HY-100
1 1/2"	1 1/2"	HY-151
2"	2"	HY-201

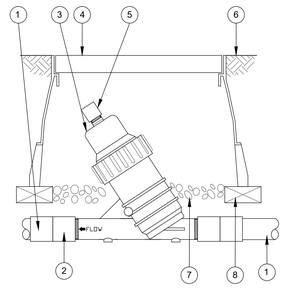

1. PVC LATERAL PIPE
2. PVC SCH 40 FEMALE ADAPTER (1 OF 2), LINE SIZE
3. HUNTER Y-FILTER WITH 150 MESH ELEMENT FILTER, SAME SIZE AS VALVE.
4. VALVE BOX W/ COVER: 12" SIZE, APPLIED ENGINEERING #1015-1G2G.
5. 3/4" PVC CAP
6. FINISH GRADE
7. 3" MIN DEPTH OF 3/8" WASHED GRAVEL
8. BRICK (1 OF 4)

NOTE: INSTALL LINE SIZE FILTER (SEE FILTER SIZE CHART) ON PRECISION SPRAY AND BUBBLER VALVES IN SEPARATE VALVE BOXES - ADJACENT TO REMOTE CONTROL VALVE. FILTERS ARE TO BE INSTALLED ON DISCHARGE SIDE OF VALVE.

05 1" / 1 1/2" / 2" Y FILTER DETAIL NTS

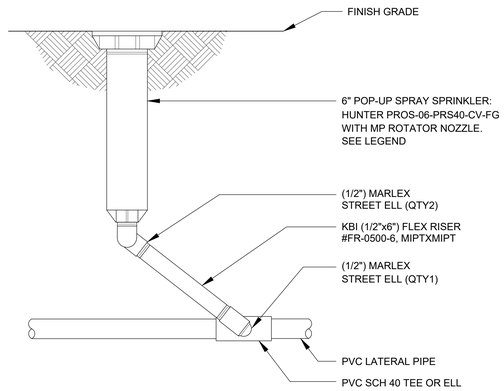

NOTE: SEE MANUFACTURERS INSTALLATION INSTRUCTIONS

06 6" POP-UP MP ROTATOR NTS

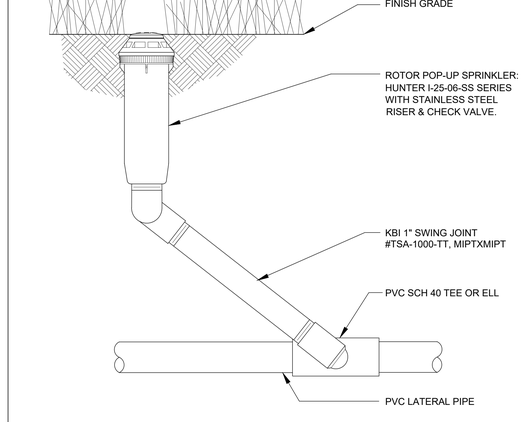

NOTE: SEE MANUFACTURERS INSTALLATION INSTRUCTIONS

07 6" POP-UP ROTOR SPRINKLER NTS

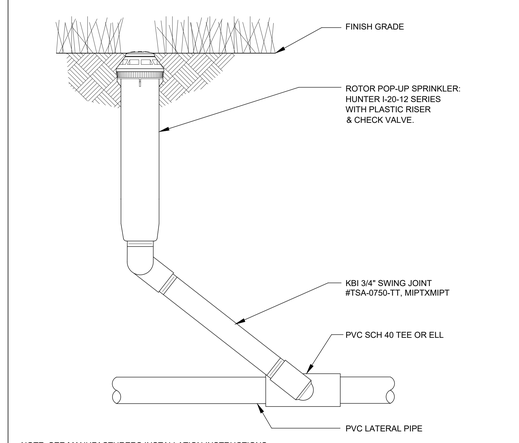

NOTE: SEE MANUFACTURERS INSTALLATION INSTRUCTIONS

08 12" POP-UP ROTOR SPRINKLER NTS

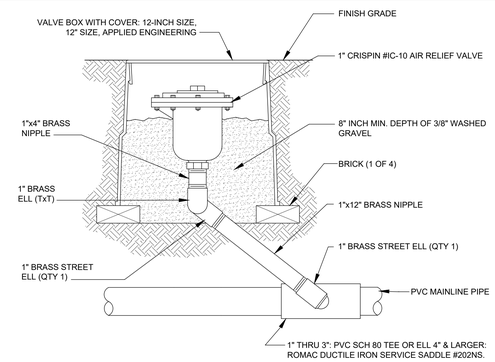

NOTE: SEE MANUFACTURERS INSTALLATION INSTRUCTIONS

NOTE: INSTALL AT HIGH ELEVATION POINTS & MAINLINE DEAD END RUNS. SEE PLAN SHEETS.

09 AIR RELIEF VALVE DETAIL NTS

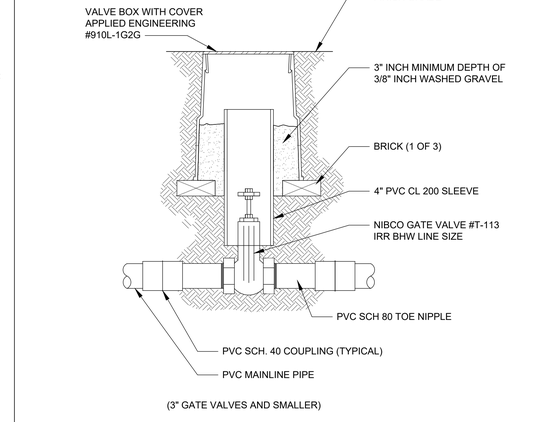

(3" GATE VALVES AND SMALLER)

NOTE: SEE MANUFACTURERS INSTALLATION INSTRUCTIONS

10 MAINLINE GATE VALVE (1" THRU 3") NTS

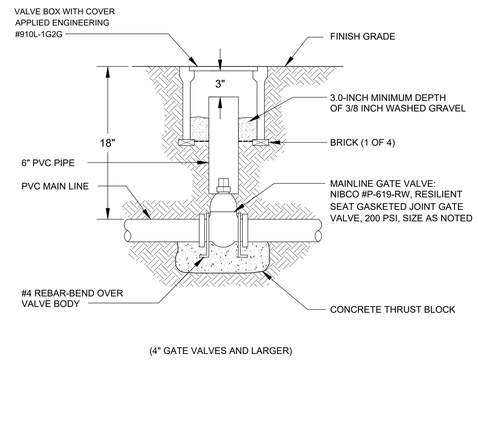

(4" GATE VALVES AND LARGER)

NOTE: SEE MANUFACTURERS INSTALLATION INSTRUCTIONS

11 MAINLINE GATE VALVE NTS

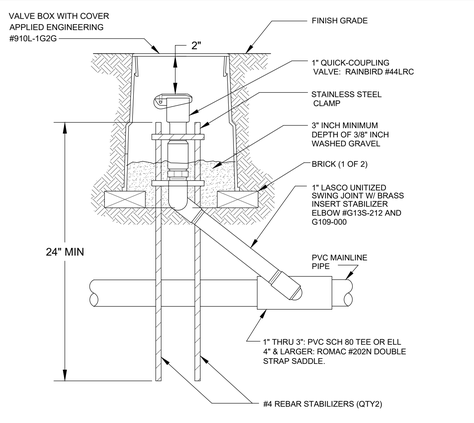

NOTE: SEE MANUFACTURERS INSTALLATION INSTRUCTIONS

NOTE: DISTRICT MAINT. DEPARTMENT TO APPROVE ALL QUICK COUPLER VALVE LOCATIONS PRIOR TO INSTALLATION.

12 QUICK-COUPLING VALVE NTS

IDENTIFICATION STAMP
DIV. OF THE STATE ARCHITECT
APP: 02-122821 INC: 2
REVIEWED FOR
SS ☑ FLS ☑ ACS ☑
DATE: 11/20/2025

Teter, Inc. expressly reserves its common law copyright and other property rights in these plans. This document, the ideas and designs incorporated herein, as an instrument of professional service, is not to be used in whole or in part, for any other project without prior written authorization.

MARK	DATE	DESCRIPTION
A	11/13/2025	DSA BACKCHECK

TETER, INC.
FRESNO HEADQUARTERS
VISALIA|| BAKERSFIELD | MODESTO | SAN LUIS OBISPO
ARCHITECTS ENGINEERS CONNECTED

VISALIA CAMPUS UNIVERSITY CENTER
COLLEGE OF THE SEQUOIAS
915 S. MOONEY BLVD
915 S MOONEY BLVD, VISALIA, CA 93277

DRAWING TITLE
LANDSCAPE & IRRIGATION DETAILS

PROJECT NO. 22-12498

DRAWING L400.2

David Bigler Associates
Landscape Architect #3887
1589 W Shaw Ave, #5
Fresno, California 93711
E Mail: davebigler.@aol.com
Tel: (559) 276-9495
Fax: (559) 276-9497

PLOT DATE: 10/1/2024 4:12:03 PM

\\tetr-file1\Users\Gerardo.Juarez_TETR\Documents\12832-A-COS Promenade_gerardo.juarez7Z6UR.rvt

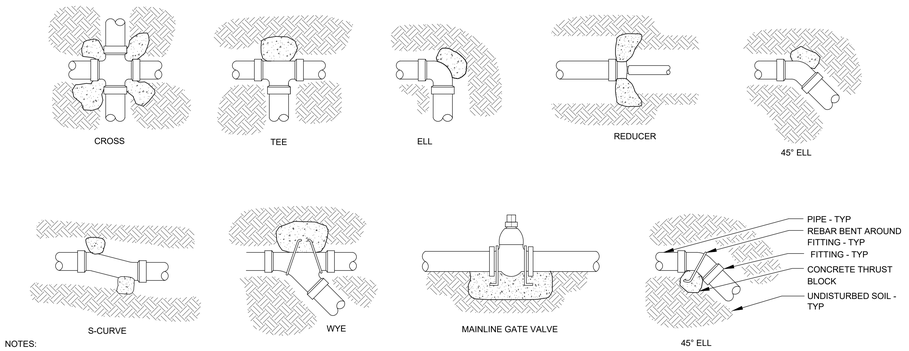

NOTES:

1. SUPPLY LINES 3-INCHES IN DIAMETER AND LARGER SHALL RECEIVE CONCRETE THRUST BLOCKS OR MECHANICAL JOINT RESTRAINTS.
2. SEE PIPE MANUFACTURERS SPECIFICATIONS FOR AMOUNT OF CONCRETE TO BE USED FOR THRUST BLOCK.
3. INSTALL ALL PIPE IN STRICT ACCORDANCE W/ PIPE MANUFACTURERS INSTRUCTIONS AND RECOMMENDATIONS

NOTE: SEE MANUFACTURERS INSTALLATION INSTRUCTIONS

13 THRUST BLOCKS — NTS

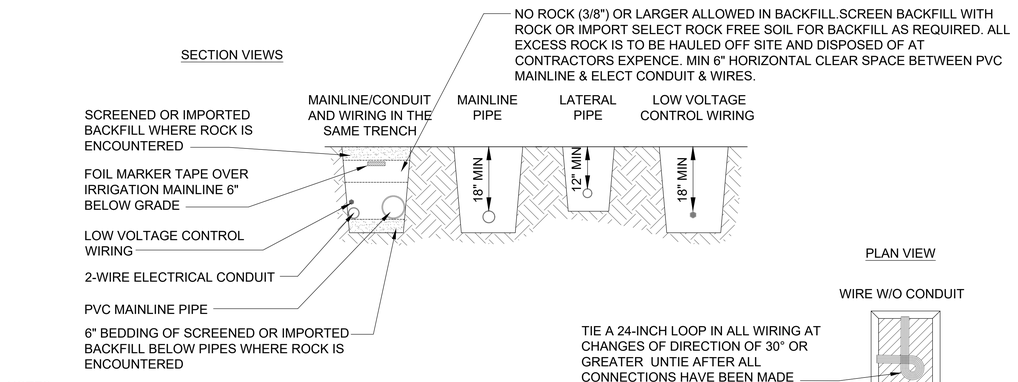

NOTES:
1. SLEEVE BELOW ALL HARDSCAPE ELEMENTS WITH PVC SLEEVE TWICE THE DIAMETER OF THE PIPE OR WIRE BUNDLE WITHIN, MIN SLEEVE SIZE IS 2".
2. INSTALL ALL PIPE AND WIRE IN STRICT CONFORMANCE WITH MANUFACTURERS INSTRUCTIONS AND RECOMMENDATIONS

NOTE: SEE MANUFACTURERS INSTALLATION INSTRUCTIONS

14 TRENCHING DETAIL — NTS

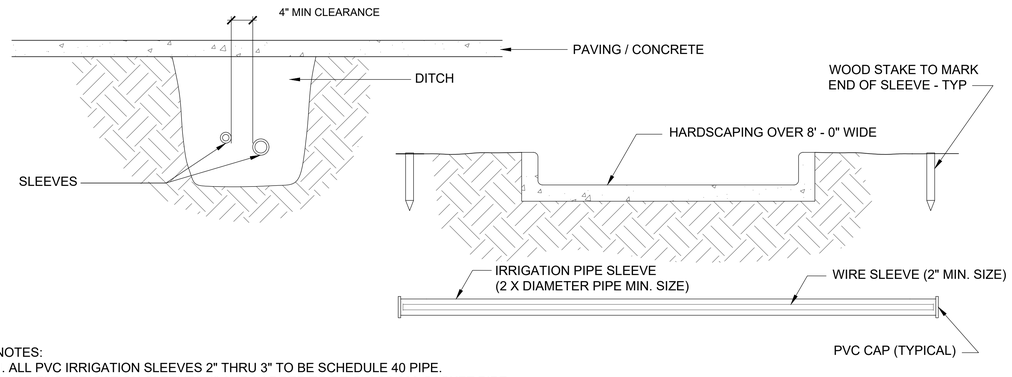

NOTES:
1. ALL PVC IRRIGATION SLEEVES 2" THRU 3" TO BE SCHEDULE 40 PIPE.
2. ALL PVC IRRIGATION SLEEVES 4" AND LARGER TO BE CLASS 200 GASKET PIPE.
2. ALL JOINTS TO BE SOLVENT WELDED AND WATERTIGHT.
3. IRRIGATION PIPES AND LOW VOLTAGE WIRES ARE TO BE SLEEVED SEPARATELY.
4. ALL PIPES & WIRES ARE TO BE SLEEVED UNDER PAVED/CONC. 8'-0" WIDE OR WIDER. MECHANICALLY COMPACT TO 95% PROCTOR.

NOTE: SEE MANUFACTURERS INSTALLATION INSTRUCTIONS

15 SLEEVING DETAIL — NTS

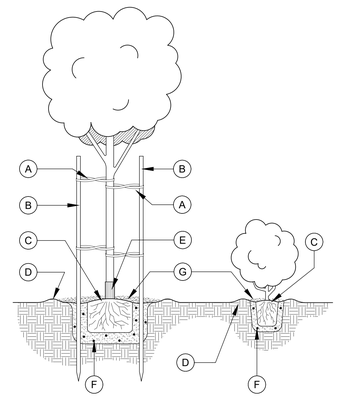

KEY NOTES

- (A) TREE TIES TO BE APPROVED RUBBER OR PLASTIC STRAPS NAILED TO STAKES
- (B) TREATED 2"x10' LODGE POLE STAKE TO BE SET VERTICAL
- (C) TOP OF ROOT BALL IS TO BE SET SLIGHTLY ABOVE FINISH GRADE
- (D) CONSTRUCT WATER BASIN TO THE DIAMETER NOTED BELOW WITH 3" BERM AROUND PERIMETER. SOFTEN BERM IN TURF AREAS. REMOVE ALL TURF WITHIN BERM AREA IN TURF AREAS

BERM DIAMETER	SIZE OF PLANT
30"	15 GALLON PLANT
36"	24" BOX
16"	5 GALLON PLANT
12"	1 GALLON PLANT

- (E) EXPANDABLE STRING TRIMMER TREE BOOT. USE ON TREES INSTALLED IN TURF AREAS ONLY
- (F) AGRIFORM PLANT FERTILIZER TABLETS
- (G) MULCH AS TOP DRESSING ALL NON TURF LANDSCAPE AREAS WITH WALK ON BARK AS SUPPLIED BY SUPERIOR SOIL SUPPLIMENTS OR APPROVED EQUAL. INSTALL TO A COMPACTED DEPTH OF THREE INCHES (3"). DO NOT ENGULF THE STEMS OR TRUNKS OF SHRUBS AND TREES.

PLANTING NOTES

1. ONE DRAINAGE HOLE, MIN. DIAMETER 18", SHALL BE DRILLED FOR EACH TREE TO A MIN. DEPTH OF TEN FEET (10') BACKFILL WITH ORIGINAL SOIL. DRAINAGE HOLE IS TO BE OFF SET FROM THE PLANTING HOLE TO PREVENT SETTLEMENT OF THE TREE OR SHRUB.
2. PLANTING HOLE IS TO BE TWICE THE DIAMETER OF CONTAINER WITH DEPTH EQUAL TO ROOT BALL, PLUS FOUR INCHES. BACKFILL WITH 85% CLEAN NATIVE SOIL MIXED WITH 15% NITRIFIED AGED FIR BARK HUMUS. APPLY AGRIFORM PLANT FERTILIZER TABS TO BACKFILL AS FOLLOWS.

# OF TABS	SIZE OF PLANT
2	1 GALLON SIZE
4	5 GALLON SIZE
6	15 GALLON SIZE
8	24" BOX SIZE
10	36" / 48" BOX SIZE

3. PLACE TREE OR SHRUB IN CENTER OF PLANTING HOLE.
4. TAMP BACKFILL TO FORCE OUT ALL AIR POCKETS. FOOT TAMP BACKFILL BELOW ROOT BALL TO PREVENT SETTLEMENT.
5. WATER TREE OR SHRUB IMMEDIATELY AFTER PLANTING
6. DOUBLE STAKE, WITH ONE STAKE TO BE PLACED ON THE WINDWARD SIDE AND THE OTHER PLACED ON THE LEEWARD SIDE OF THE TYPICAL PREVAILING WIND. TOP OF STAKE IS TO BE SIX INCHES BELOW THE BRANCHING POINT OF THE CROWN.

16 TREE AND SHRUB PLANTING DETAIL — NTS

1. ALWAYS INSTALL THE DECODER MODULE IN A VALVE BOX FOR EASE OF SERVICE.

2. MAXIMUM COMMUNICATION WIRE LENGTH BETWEEN THE CONTROLLER AND THE FARTHEST DECODER IS 5,000 FEET.

3. RECOMMENDED CABLE FOR CONTROLLER-TO-DECODER IS RAIN MASTER TWO-WIRE PATH, #TW-CAB-14, 14 AWG, SOLID COPPER, DOUBLE JACKETED 2-CONDUCTOR, DIRECT BURIAL CABLE. ALL 2-WIRE PATH CABLE IS TO BE INSTALLED IN 1 1/2" PVC ELECTRICAL CONDUIT WITH SWEEP ELLS.

4. THE INTEGRITY OF THE COMMUNICATION CABLE IS CRITICAL TO OPERATION OF THE SYSTEM. AS IT IS BEING INSTALLED, BEFORE THE DECODERS ARE CONNECTED, LOOP THE COMMUNICATION CABLE UP OUT THE VALVE BOX LEAVING A MINIMUM 3 FT LOOP ABOVE GRADE.

5. AT THE END OF EACH WIRE PATH, THE WIRE SHOULD BE TESTED WITH A VOLT-OHM METER TO CHECK FOR DAMAGE THAT MAY HAVE OCCURRED DURING INSTALLATION.

6. WHEN USING DECODERS, IT IS REQUIRED TO LOCATE THE DECODER AT THE VALVE IT SERVES TO REDUCE THE OUTPUT WIRE PATH EXPOSURE TO LIGHTNING. IT ALSO MAKES IT EASIER TO LOCATE FOR SERVICE.

7. TWO WIRE PATH LINE SURGE PROTECTOR - (#TW-LA-1) SURGE PROTECTOR AND GROUNDING EQUIPMENT SHOULD BE INSTALLED EVERY 500 FEET ON THE TWO WIRE PATH.

8. COMMUNICATION CABLE MUST BE CONNECTED BLACK TO BLACK AND RED TO RED AT ALL SPLICES WITH RAINMASTER #TW-SPLICE-14 WATERPROOF SPLICE KITS.

9. REMOTE CONTROL VALVES MUST BE EQUIPPED WITH SOLENOIDS. COMPATIBLE WITH RAINMASTER TWO-WIRE CONTROL SYSTEM.

10. ALL DECODER / CONTROL WIRING WORK IS TO BE IN COMPLIANCE WITH MANUFACTURERS (RAINMASTER) RECOMMENDATIONS.

11. CONTRACTOR IS TO HAVE ALL FIELD PERSONNEL INSTALLING RAINMASTER DECODERS, COMMUNICATION CABLE AND REMOTE CONTROL VALVE WIRING TO BE TRAINED BY AN AUTHORIZED RAINMASTER REPRESENTATIVE, CHRIS STEELE, (559) 779-8676 PRIOR TO STARTING CONSTRUCTION.

12. CONTRACTOR IS TO HAVE ALL RAINMASTER 2-WIRE PATH WIRING, COMMUNICATION CABLE AND REMOTE CONTROL VALVE WIRING AND 2-WIRE PATH GROUNDING INSPECTED PRIOR TO BACKFILL BY AN AUTHORIZED RAINMASTER REPRESENTATIVE, CHRIS STEELE, (559) 779-8676.

17 RAINMASTER 2-WIRE PATH & STATION DECODER NOTES — NTS

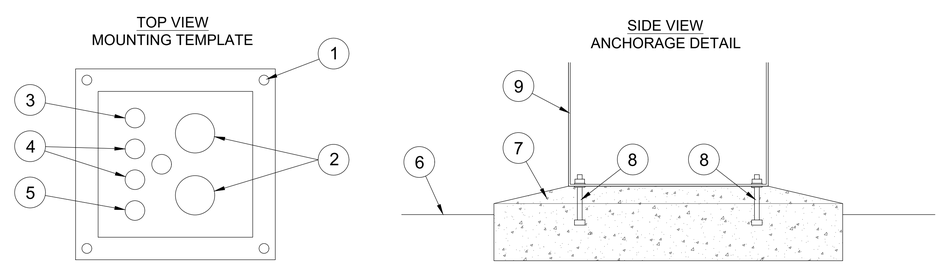

1. CONTROLLER MOUNTING TEMPLATE WITH FOUR (4) 1/2" DIAMETER MOUNTING HOLES TO MATCH CONTROLLER PEDESTAL BASE.
2. TWO (2) 2" PVC ELECTRICAL CONDUITS WITH SWEEP ELLS FOR LOW VOLTAGE CONTROL WIRES.
3. ONE (1) 1" PVC ELECTRICAL CONDUIT WITH SWEEP ELL FOR CONTROLLER GROUNDING WIRE.
4. THREE (3) 1" PVC ELECTRICAL CONDUIT WITH SWEEP ELLS FOR FUTURE USE.
5. ONE (1) 1" PVC ELECTRICAL CONDUIT WITH SWEEP ELL FOR CONTROLLER ELECTRICAL POWER SUPPLY WIRING.
6. FINISH GRADE.
7. CONCRETE BASE THAT IS A MINIMUM OF 6" THICK AND 6" LARGER ON ALL SIDES OF THE CONTROLLER PEDESTAL FOOTPRINT. SLOPE SIDES OUTSIDE PEDESTAL FOOTPRINT TO DRAIN.
8. PEDESTAL ANCHOR BOLT MOUNTING: TWO (2) OF FOUR (4) ANCHOR BOLTS ARE SHOWN.
   A. ANCHOR BOLT (F1554 GR 55) - 3/8" DIA EMBED 3" MINIMUM
   B. WASHERS - TWO (2) PER ANCHOR BOLT REQUIRED.
   C. ANCHOR BOLT NUT - KEPS 3/8-SS, WAXED.
9. CONTROLLER PEDESTAL.

NOTE: SEE REPLACEMENT CONTROLLER 'C' DETAIL #19
NOTE: SEE MANUFACTURERS INSTALLATION INSTRUCTIONS

THE TEMPLATE IS USED TO PUSH THE ANCHORS INTO FORMED CONCRETE. TEMPLATE SHOULD BE FLUSH TO TOP OF CONCRETE. ONCE CONCRETE HAS HARDENED LOOSEN NUTS FROM ANCHORS AND REMOVE TEMPLATE. TEMPLATE MAY BE USED TO SET OTHER ANCHORS BUT ONCE THE ANCHORS ARE SET THE TEMPLATE MAY BE DISCARDED.

18 REPLACEMENT CONTROLLER 'C' ANCHORAGE DETAIL — NTS

IDENTIFICATION STAMP
DIV. OF THE STATE ARCHITECT
APP: 02-122821 INC: 2
REVIEWED FOR
SS ☑ FLS ☑ ACS ☑
DATE: 11/20/2025

Teter, Inc. expressly reserves its common law copyright and other property rights in these plans. This document, the ideas and designs incorporated herein, as an instrument of professional service, is not to be used in whole or part, for any other project without prior written authorization.

MARK	DATE	DESCRIPTION
A	11/13/2025	DSA BACKCHECK

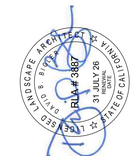

TETER, INC.
FRESNO HEADQUARTERS
VISALIA|| BAKERSFIELD | MODESTO | SAN LUIS OBISPO
ARCHITECTS ENGINEERS CONNECTED

VISALIA CAMPUS UNIVERSITY CENTER
COLLEGE OF THE SEQUOIAS
915 S. MOONEY BLVD
915 S MOONEY BLVD, VISALIA, CA 93277

DRAWING TITLE
LANDSCAPE & IRRIGATION DETAILS

PROJECT NO. 22-12498

DRAWING L401.2

David Bigler Associates
Landscape Architect #3887
1589 W Shaw Ave, #5
Fresno, California 93711
E Mail: davebigler @aol.com
Tel: (559) 276-9495
Fax: (559) 276-9497

\\tetr-file1\Users\Gerardo.Juarez_TETR\Documents\12832-A-COS Promenade_gerardo.juarez7Z6UR.rvt

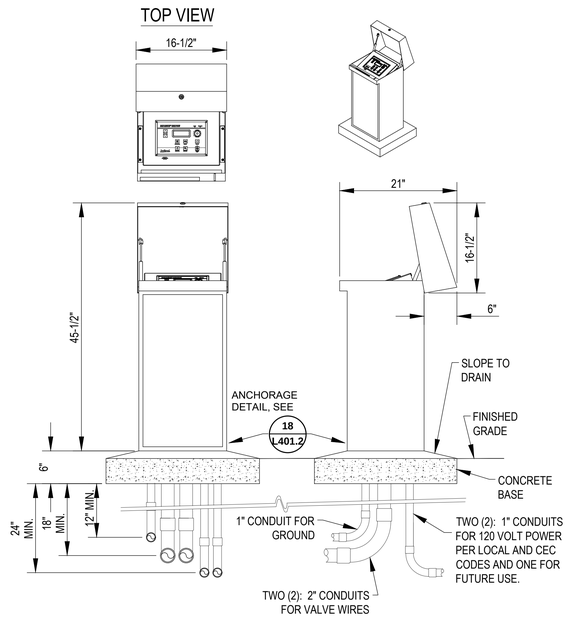

NOTES:

1. EQUIPMENT IS SUPPORTED ON GRADE AND IS LESS THAN 400 LBS AND LESS THAN FOUR (4'-0") FEET ABOVE FINISH GRADE. NOT PART OF DSA APPROVAL.
2. SEE DETAIL #18 REPLACEMENT CONTROLLER 'C' ANCHORAGE DETAIL FOR ADDITIONAL INFORMATION.
3. SEE DETAIL #21 REPLACEMENT CONTROLLER 'C' GROUNDING DETAIL FOR ADDITIONAL INFORMATION.

19 REPLACEMENT CONTROLLER 'C' DETAIL — NTS

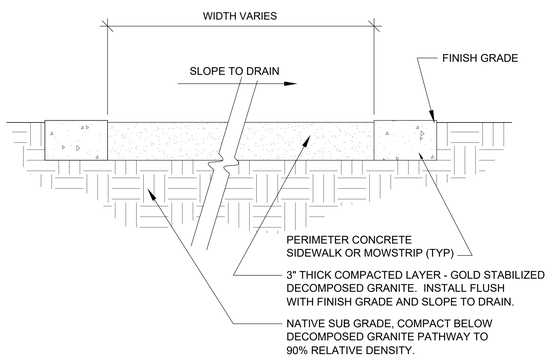

20 STABILIZED DECOMPOSED GRANITE — NTS

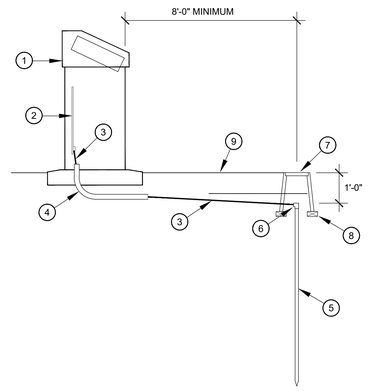

NOTE: SEE MANUFACTURERS INSTALLATION INSTRUCTIONS

LEGEND

1. CONTROLLER ASSEMBLY
2. CONTROLLER BACK BOARD OR CONTROLLER SUB ASSEMBLY
3. SOLID BARE COPPER GROUNDING WIRE (#6 AWG) FROM CONTROLLER TO GROUNDING ROD. MAKE WIRE RUNS AS STRAIGHT AS POSSIBLE.
4. 1" ELECTRICAL CONDUIT LONG SWEEP ELL
5. 5/8" X 8' LONG COPPER CLAD GROUNDING ROD.
6. CADWELD PLUS "ONE SHOT" - CADWELD CONNECTION # GT1161GPLUS, PERMANENT WELD OF BARE COPPER WIRES TO GROUNDING ROD.
7. 10" ROUND VALVE BOX WITH LID.
8. BRICKS, THREE (3) REQUIRED PER VALVE BOX WITH 3" LAYER GRAVEL.
9. FINISH GRADE

NOTE: CONTROLLER GROUNDING REQUIRES GROUNDING TO A SINGLE POINT OF GROUND WITH A MEASURED RESISTANCE OF NO MORE THAN 10 OHMS. GROUNDING IS TO BE VERIFIED IN THE FIELD BY THE IOR, LANDSCAPE ARCHITECT OR RAINMASTER AUTHORIZED REPRESENTATIVE. (ASIC SPEC: SECTION 7.0 - MEASURING RESISTANCE, ITEM A.)

21 CONTROLLER 'C' GROUNDING DETAIL — NTS

1. CONTRACTOR IS TO FINE GRADE THE ENTIRE SITE AND INSURE THE SITE IS FREE DRAINING.
2. CONTRACTOR IS TO EXCAVATE THE NATIVE SOIL TO A DEPTH OF THREE (3") INCHES WITH CLEAN EDGES. CONTRACTOR IS TO REMOVE SPOILS FROM THE SITE AT NO ADDITIONAL COST TO THE DISTRICT, OR INCORPORATE THEM INTO THE OVERALL GRADING SCHEME. CONTRACTOR IS TO COMPACT THE NATIVE SOIL BELOW THE DECOMPOSED GRANITE AREAS TO 90% RELATIVE DENSITY.
3. CONTRACTOR IS TO IMPORT CLEAN HIGH QUALITY STABILIZED DECOMPOSED GRANITE (GOLD) AND PLACE IT IN WIND ROWS WITHIN THE DESIGNATED AREAS. THE DECOMPOSED GRANITE IS TO BE CAREFULLY SPREAD (DO NOT MIX WITH ADJACENT SOILS), GRADED AND COMPACTED TO A FINAL THICKNESS OF THREE (3"). SEE LANDSCAPE SPECIFICATIONS FOR ADDITIONAL INFORMATION.
4. AREA IS TO BE GRADED SO IT DOES NOT IMPEDE SITE DRAINAGE (SITE IS TO BE FREE DRAINING) AND NO WATER IS TO COLLECT OR PUDDLE ON ANY AREA OF THE DECOMPOSED GRANITE.

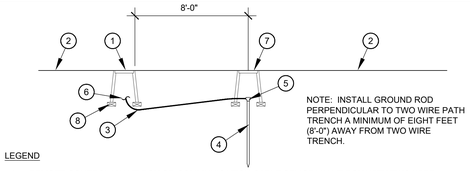

NOTE: INSTALL GROUND ROD PERPENDICULAR TO TWO WIRE PATH TRENCH A MINIMUM OF EIGHT FEET (8'-0") AWAY FROM TWO WIRE TRENCH.

LEGEND

1. REMOTE CONTROL VALVE BOX OR COMMUNICATION CABLE SPLICE VALVE BOX WITH TWO WIRE PATH LINE SURGE PROTECTOR, RAINMASTER #TW-LA-1, SEE DETAILS #23, #25, #26 & #27.
2. FINISH GRADE
3. SOLID BARE COPPER GROUNDING WIRE (#6 AWG) FROM TWO WIRE PATH LINE SURGE PROTECTOR #TW-LA-1 TO COPPER GROUNDING ROD. MAKE WIRE RUNS AS STRAIGHT AS POSSIBLE
4. 5/8" X 8' LONG COPPER CLAD GROUNDING ROD.
5. CADWELD PLUS "ONE SHOT" - CADWELD CONNECTION #GT1161GPLUS, PERMANENT WELD OF BARE COPPER WIRES TO GROUNDING ROD.
6. CONNECT TO TWO WIRE PATH LINE SURGE PROTECTOR #TW-LA-1.
7. 10" ROUND VALVE BOX WITH LID, APPLIED ENGINEERING #910L-1G2G.
8. BRICKS (TYP), THREE (3) REQUIRED PER VALVE BOX WITH THREE INCHES (3") GRAVEL.

NOTES:
1. INSTALL ONE #TW-LA-1 LINE SURGE PROTECTOR NO FURTHER THAN 500 FT FROM ANY DECODER, OR AS SHOWN ON PLAN.
2. INSTALL THE TWO WIRE PATH GROUNDING ROD A MINIMUM OF EIGHT FEET (8'-0") FROM #TW-LA-1 LINE SURGE PROTECTOR, DO NOT INSTALL IN THE SAME TRENCH AS THE TWO WIRE PATH COMMUNICATION CABLE, INSTALL PERPENDICULAR TO THE TRENCH WITH THE TWO WIRE PATH COMMUNICATION CABLE.
3. TWO WIRE PATH GROUNDING REQUIRES GROUNDING TO A SINGLE POINT OF GROUND WITH A MEASURED RESISTANCE OF NO MORE THAN 25 OHMS IS REQUIRED AT EACH #TW-LA-1. GROUNDING IS TO BE VERIFIED IN THE FIELD BY THE IOR, LANDSCAPE ARCHITECT OR RAINMASTER AUTHORIZED REPRESENTATIVE. (ASIC SPEC: SECTION 7.0 - MEASURING RESISTANCE, ITEM A.)

NOTE: SEE MANUFACTURERS INSTALLATION INSTRUCTIONS

22 TWO WIRE PATH GROUNDING — NTS

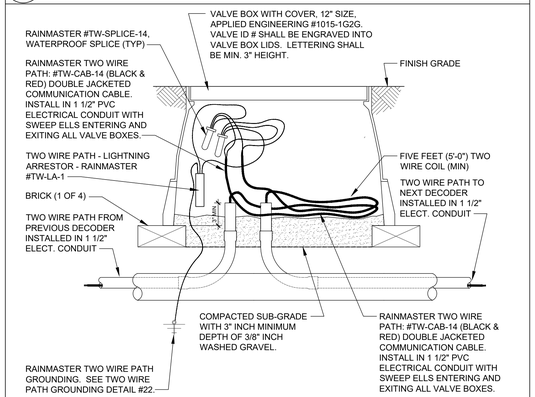

NOTE: LOCATE J BOXES A MAXIMUM OF 150 FEET ON CENTER OR AT ALL CHANGES IN DIRECTION OF NINETY DEGREES OR MORE, AT ALL SPLICES (NOT IN REMOTE CONTROL VALVE BOX) AND AT DEAD END STUBS.

NOTE: ALL COMMUNICATION CABLE (TWO WIRE PATH) IS TO BE INSTALLED IN 1 1/2" PVC SCH. 40 ELECTRICAL CONDUIT WITH LONG SWEEP ELBOWS ENTERING AND EXITING ALL VALVE BOXES AND PULL BOXES AS REQUIRED.

23 TWO WIRE PATH SPLICE / J-BOX — NTS

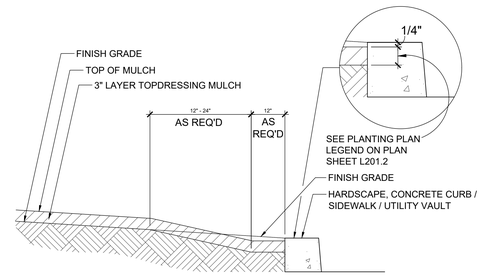

NOTES:
1. CONTRACTOR IS TO MODIFY FINISH GRADE SOIL AS REQUIRED TO INSTALL / CONSTRUCT PERIMETER "LOCK TRENCH" FOR MULCH.

2. CONTRACTOR IS TO REMOVE SOIL EXCAVATED FROM "LOCK TRENCH" AREAS OFF SITE AS PART OF THE BID, OR USE IT IN OVERALL GRADING SCHEME.

24 PERIMETER LOCK TRENCH — NTS

IDENTIFICATION STAMP
DIV. OF THE STATE ARCHITECT
APP: 02-122821 INC: 2
REVIEWED FOR
SS ☑ FLS ☑ ACS ☑
DATE: 11/20/2025

Teter, Inc. expressly reserves its common law copyright and other property rights in these plans. This document, the ideas and designs incorporated herein, as an instrument of professional service, is not to be used in whole or part, for any other project without prior written authorization.

MARK	DATE	DESCRIPTION
A	11/13/2025	DSA BACKCHECK



TETER, INC.
FRESNO HEADQUARTERS
VISALIA | BAKERSFIELD | MODESTO | SAN LUIS OBISPO
ARCHITECTS ENGINEERS CONNECTED

VISALIA CAMPUS UNIVERSITY CENTER
COLLEGE OF THE SEQUOIAS
915 S. MOONEY BLVD
915 S MOONEY BLVD, VISALIA, CA 93277

DRAWING TITLE
LANDSCAPE & IRRIGATION DETAILS

PROJECT NO. 22-12498

DRAWING L402.2

David Bigler Associates
Landscape Architect #3887
1589 W Shaw Ave, #5
Fresno, California 93711
E Mail: davebigler @aol.com
Tel: (559) 276-9486
Fax: (559) 276-9497

\\tetr-file1\Users\Gerardo.Juarez_TETR\Documents\12832-A-COS Promenade_gerardo.juarez7Z6UR.rvt

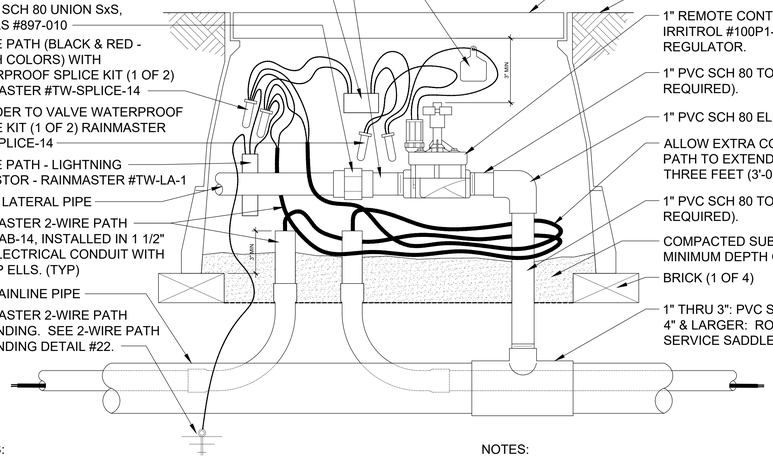

NOTES:

1. INSTALL A MAXIMUM OF ONE REMOTE CONTROL VALVE PER 12" STANDARD RECTANGULAR VALVE BOX.
2. CONTRACTOR TO INSTALL IRRITROL PRESSURE REGULATING MODULE (OMR-100) FOR ALL VALVES.
3. INSTALL LINE SIZE HUNTER 150 MESH FILTER FOR ALL LOW FLOW BUBBLER AND FIXED POP-UP SPRAY VALVES IN SEPARATE VALVE BOX. SEE DETAIL #05.
4. INSTALL RAINMASTER #TW-LA-1 LIGHTNING ARRESTOR DEVICE NO FURTHER THAN 500 FEET FROM ANY DECODER. SEE DETAIL #22.
5. INSTALL THE 2-WIRE PATH GROUNDING ROD PERPENDICULAR AND A MINIMUM OF EIGHT FEET (8'-0") FROM #TW-LA-1 LIGHTNING ARRESTOR AND 2-WIRE COMMUNICATION CABLE. DO NOT INSTALL IN THE SAME TRENCH AS THE 2-WIRE PATH COMMUNICATION CABLE (#TW-CAB-14). SEE DETAIL #22.

NOTE: SEE MANUFACTURERS INSTALLATION INSTRUCTIONS

25 1" REMOTE CONTROL SCRUBBER VALVE W / RAINMASTER DECODER ON 2-WIRE PATH NTS

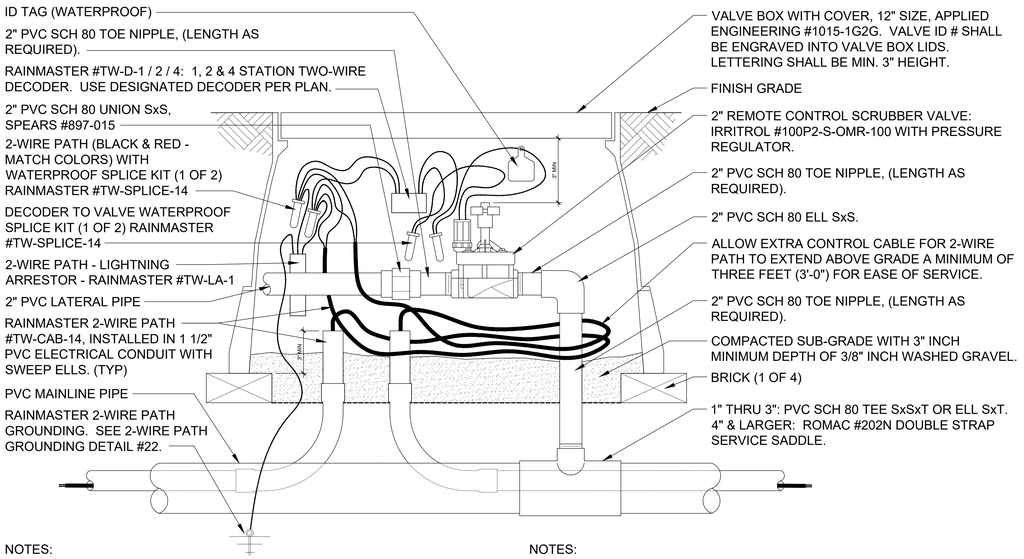

NOTES:

1. INSTALL A MAXIMUM OF ONE REMOTE CONTROL VALVE PER 12" STANDARD RECTANGULAR VALVE BOX.
2. CONTRACTOR TO INSTALL IRRITROL PRESSURE REGULATING MODULE (OMR-100) FOR ALL VALVES.
3. INSTALL LINE SIZE HUNTER 150 MESH FILTER FOR ALL LOW FLOW BUBBLER AND FIXED POP-UP SPRAY VALVES IN SEPARATE VALVE BOX. SEE DETAIL #05.
4. INSTALL RAINMASTER #TW-LA-1 LIGHTNING ARRESTOR DEVICE NO FURTHER THAN 500 FEET FROM ANY DECODER. SEE DETAIL #22.
5. INSTALL THE 2-WIRE PATH GROUNDING ROD PERPENDICULAR AND A MINIMUM OF EIGHT FEET (8'-0") FROM #TW-LA-1 LIGHTNING ARRESTOR AND 2-WIRE COMMUNICATION CABLE. DO NOT INSTALL IN THE SAME TRENCH AS THE 2-WIRE PATH COMMUNICATION CABLE (#TW-CAB-14). SEE DETAIL #22.

NOTE: SEE MANUFACTURERS INSTALLATION INSTRUCTIONS

27 2" REMOTE CONTROL SCRUBBER VALVE W / RAINMASTER DECODER ON 2-WIRE PATH NTS

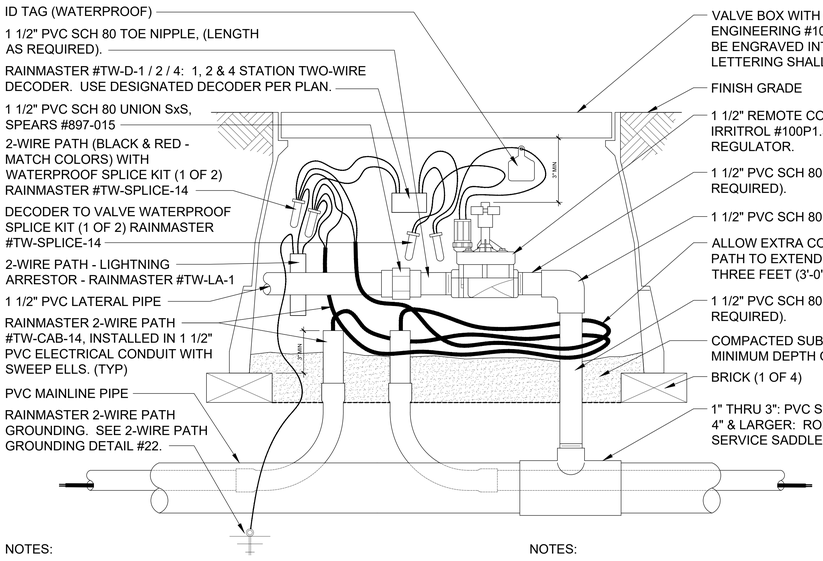

NOTES:

1. INSTALL A MAXIMUM OF ONE REMOTE CONTROL VALVE PER 12" STANDARD RECTANGULAR VALVE BOX.
2. CONTRACTOR TO INSTALL IRRITROL PRESSURE REGULATING MODULE (OMR-100) FOR ALL VALVES.
3. INSTALL LINE SIZE HUNTER 150 MESH FILTER FOR ALL LOW FLOW BUBBLER AND FIXED POP-UP SPRAY VALVES IN SEPARATE VALVE BOX. SEE DETAIL #05.
4. INSTALL RAINMASTER #TW-LA-1 LIGHTNING ARRESTOR DEVICE NO FURTHER THAN 500 FEET FROM ANY DECODER. SEE DETAIL #22.
5. INSTALL THE 2-WIRE PATH GROUNDING ROD PERPENDICULAR AND A MINIMUM OF EIGHT FEET (8'-0") FROM #TW-LA-1 LIGHTNING ARRESTOR AND 2-WIRE COMMUNICATION CABLE. DO NOT INSTALL IN THE SAME TRENCH AS THE 2-WIRE PATH COMMUNICATION CABLE (#TW-CAB-14). SEE DETAIL #22.

NOTE: SEE MANUFACTURERS INSTALLATION INSTRUCTIONS

26 1 1/2" REMOTE CONTROL SCRUBBER VALVE W / RAINMASTER DECODER ON 2-WIRE PATH NTS

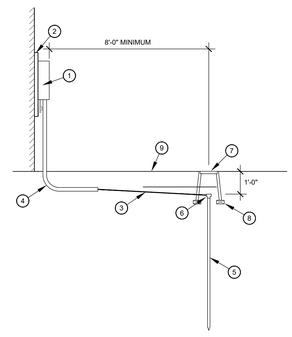

LEGEND

1. CONTROLLER ASSEMBLY
2. IRRIGATION CONTROLLER BACK BOARD
3. SOLID BARE COPPER GROUNDING WIRE (#6 AWG) FROM IRRIGATION CONTROLLER TO GROUNDING ROD AND TO COPPER GROUNDING PLATE. MAKE WIRE RUNS AS STRAIGHT AS POSSIBLE.
4. 1" ELECTRICAL CONDUIT LONG SWEEP ELL
5. 5/8" X 8' LONG COPPER CLAD GROUNDING ROD.
6. CADWELD PLUS "ONE SHOT" - CADWELD CONNECTION #GT1161GPLUS, PERMANENT WELD OF BARE COPPER WIRES TO GROUNDING ROD.
7. 10" ROUND VALVE BOX WITH LID, APPLIED ENGINEERING #910L-1G2G
8. BRICKS, THREE (3) REQUIRED PER VALVE BOX.
9. FINISH GRADE

NOTE: SEE IRRIGATION CONTROLLER 'G' DETAIL #29.
NOTE: SEE MANUFACTURERS INSTALLATION INSTRUCTIONS

28 CONTROLLER 'G' GROUNDING DETAIL NTS

FRONT
SECTION/ELEVATION

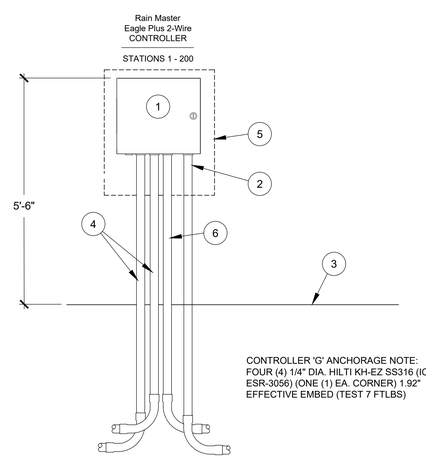

CONTROLLER 'G' ANCHORAGE NOTE:
FOUR (4) 1/4" DIA. HILTI KH-EZ SS316 (ICC ESR-3056) (ONE (1) EA. CORNER) 1.92" EFFECTIVE EMBED (TEST 7 FTLBS)

1. EAGLE PLUS CONTROLLER 'G' WITH LOCKING WALL MOUNT CABINET WITH WEATHER PROOF BACKBOARD.
2. 1" CONDUIT FOR ELECTRICAL POWER SUPPLY PER CEC CODES.
3. FINISH FLOOR, PUMP YARD.
4. TWO (2) 1 1/2" CONDUIT FOR 2-WIRE COMMUNICATION CABLES.
5. WEATHERPROOF BACKBOARD TO MOUNT CONTROLLER ASSEMBLY.
6. 1" CONDUIT FOR FUTURE USE.

NOTE: SEE MANUFACTURERS INSTALLATION INSTRUCTIONS

29 IRRIGATION CONTROLLER 'G' ASSEMBLY NTS

PLOT DATE: 10/1/2024 4:12:03 PM

David Bigler Associates
Landscape Architect #3887
1589 W Shaw Ave, #5
Fresno, California 93711
E Mail: davebigler @aol.com
Tel: (559) 276-9495
Fax: (559) 276-9497

IDENTIFICATION STAMP
DIV. OF THE STATE ARCHITECT
APP: 02-122821 INC: 2
REVIEWED FOR
SS ☑ FLS ☑ ACS ☑
DATE: 11/20/2025

Teter, Inc. expressly reserves its common law copyright and other property rights in these plans. This document, the ideas and designs incorporated herein, as an instrument of professional service, is not to be used in whole or in part, for any other project without prior written authorization.

MARK	DATE	DESCRIPTION
A	11/13/2025	DSA BACKCHECK

LANDSCAPE ARCHITECT — DAVID BIGLER — RLA # 3887 — 31 JULY 26 — RENEWAL — STATE OF CALIFORNIA

TETER, INC.
FRESNO HEADQUARTERS
VISALIA | BAKERSFIELD | MODESTO | SAN LUIS OBISPO
ARCHITECTS ENGINEERS CONSULTANTS

VISALIA CAMPUS UNIVERSITY CENTER
COLLEGE OF THE SEQUOIAS
915 S. MOONEY BLVD
915 S MOONEY BLVD, VISALIA, CA 93277

DRAWING TITLE
LANDSCAPE & IRRIGATION DETAILS

PROJECT NO. 22-12498

DRAWING L403.2

\\tet-file1\Users\Gerardo.Juarez_TETR\Documents\12832-A-COS Promenade_gerardo.juarez7Z6UR.rvt

PUMP STATION SPECIFICATIONS:
NAME: COS - UNIVERSITY CENTER
STATION MODEL: WMBV-5000-7A-15-480-3-220-75
STATION TOTAL PERFORMANCE: 220 GPM @ 75 PSI
DYNAMIC INLET PRESSURE: 10 PSI
BOOST PRESSURE: 65 PSI
REGULATED DISCHARGE PRESSURE: 75 PSI
PUMP HORSEPOWER:
PUMP NO.1: 15HP (3600RPM)
CHECK VALVE SIZES:
PUMP NO.1 3"
ISOLATION VALVE SIZES:
DISCHARGE ISOLATION VALVE SIZE: 3"
DISCHARGE MANIFOLD SIZE: 3"

POWER REQUIREMENTS: 480V, 60 HZ, 3PHZ, 22FLA (EST.)
EXHAUST FAN REQUIREMENTS: STD. FAN

STATION COMPONENTS:
A PUMP AND MOTOR
B CHECK VALVE
C PRESSURE TRANSDUCER WITH GAUGE
D BY-PASS VALVE
E FLOW SENSOR
F TEMP SENSOR
G STATION FAN HOOD MOUNTED
H PUMP INTAKE ISOLATION VALVE
I MARINE GRADE ALUMINUM ENCLOSURE (UNPAINTED)
J VFD
K MARINE GRADE ALUMINUM BASE (UNPAINTED)
L PUMP DISCHARGE ISOLATION VALVE
M STATION DISCHARGE ISOLATION VALVE
N INTAKE DROP PIPE W/ 4" FLG CONNECTION
O DISCHARGE DROP PIPE W/ 4" FLG CONNECTION
P LOW INLET PRESSURE SENSOR

NOT SHOWN
- INPUT LINE REACTOR

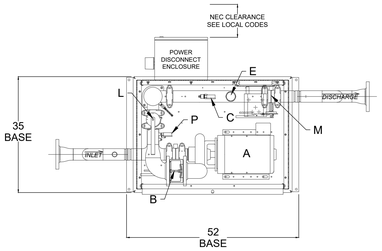

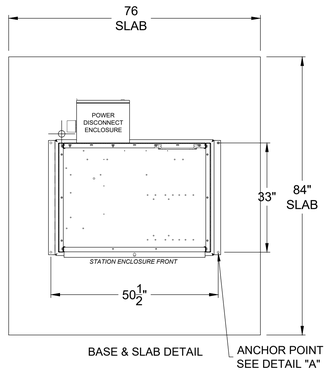

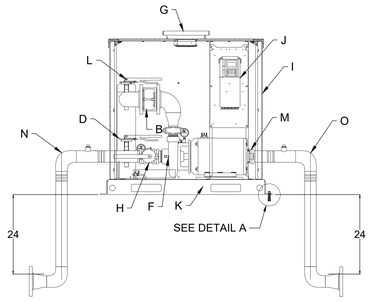

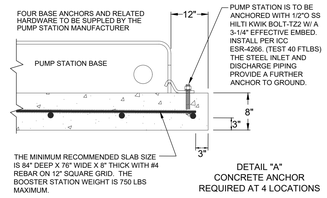

NOTE: SEE MANUFACTURERS INSTALLATION INSTRUCTIONS

30 IRRIGATION BOOSTER PUMP DETAIL : NTS

LANDSCAPE & IRRIGATION NOTES

1. PRODUCT "OR APPROVED EQUAL" SPECIFICATION NOTE: ALL SPECIFIED MATERIALS, PRODUCTS AND MANUFACTURERS ARE RELEVANT TO DESCRIBE THE REQUIRED QUALITY AND FEATURES OF A PARTICULAR COMPONENT OF THE PROJECT, HOWEVER, THE SPECIFIC PRODUCT OR MANUFACTURER NOTED IS TO BE CONSTRUED TO BE FOLLOWED BY THE WORDS, "OR APPROVED EQUAL".

2. GENERAL NOTE: THE CONTRACTOR IS TO SUPPLY ALL EQUIPMENT, MATERIALS AND LABOR TO PROVIDE A COMPLETE AND OPERATIONAL SYSTEM. ADDITIONAL EQUIPMENT AND MATERIALS IN ADDITION TO THE SYSTEM COMPONENTS LISTED IN THE LEGEND MAY BE REQUIRED TO PROVIDE A COMPLETE AND OPERATIONAL SYSTEM.

3. DESIGNATED IRRIGATION CONTROLLERS ARE EXISTING AND ARE TO REMAIN & PROTECT. THE CONTRACTOR IS TO FIELD VERIFY. ONE (1) CONTROLLER IS BEING REPLACED AND CONTRACTOR IS TO MODIFY THE EXISTING 120 VOLT ELECTRICAL AS REQUIRED FOR NEW REPLACEMENT CONTROLLER 'C' WITH ALL IMPROVEMENTS CONSTRUCTED TO CEC CODES. ONE (1) NEW IRRIGATION CONTROLLER THAT REQUIRES CONTRACTOR TO INSTALL 120 VOLT POWER FOR CONTROLLER 'G', SEE ELECTRICAL SITE PLANS FOR ADDITIONAL INFORMATION.

4. SPRINKLER ADJUSTMENT NOTE: CONTRACTOR SHALL MAKE ANY ADJUSTMENTS OR CHANGES TO SPRINKLERS, NOZZLES, RADIUS AND ARCS AS REQUIRED TO PROVIDE 100% COVERAGE TO ALL LANDSCAPE AREAS AND PREVENT OVER SPRAY ONTO BUILDINGS OR HARDSCAPED SURFACES.

5. EXISTING IRRIGATION SYSTEM AND WATERING NOTE: THE CONTRACTOR IS RESPONSIBLE TO KEEP THE EXISTING IRRIGATION SYSTEM TO REMAIN OPERATIONAL TO IRRIGATE ALL LANDSCAPED AREAS. WHERE AUTOMATIC OPERATION OF EXISTING IRRIGATION SYSTEMS IS INTERRUPTED DUE TO CONSTRUCTION ACTIVITIES, THE CONTRACTOR IS RESPONSIBLE TO SUPPLY TEMPORARY IRRIGATION TO NEW AND/OR EXISTING AREAS THAT ARE AFFECTED BY THE SERVICE INTERRUPTION AS REQUIRED DUE TO PREVAILING WEATHER CONDITIONS. THE CONTRACTOR SHALL MAKE REPAIRS TO THE EXISTING SYSTEM AS NEEDED. THE CONTRACTOR IS TO ASSIST CAMPUS MAINTENANCE PERSONNEL AS NEEDED TO KEEP THE EXISTING LANDSCAPED AREAS IRRIGATED. AREAS AFFECTED BY NEW CONSTRUCTION ARE TO BE IRRIGATED BY THE CONTRACTOR. CONTRACTOR IS TO REPLACE ANY DEAD OR STRESSED PLANT MATERIALS (TO MATCH EXISTING) THAT WERE TO REMAIN THAT WERE DAMAGED DUE TO CONSTRUCTION ACTIVITIES.

6. EXISTING IRRIGATION SYSTEM TO BE REPLACED BY NEW IRRIGATION SYSTEM NOTE: THE CONTRACTOR IS TO REMOVE EXISTING SPRINKLERS, VALVES AND OTHER IRRIGATION IMPROVEMENTS VISIBLE AT THE SURFACE IN AREAS TO RECEIVE NEW IRRIGATION AND DELIVER SALVAGED PARTS, INCLUDING, BUT NOT LIMITED TO SPRINKLERS, VALVES, VALVE BOXES ETC., TO THE CAMPUS MAINTENANCE DEPARTMENT. PIPING IS TO BE REMOVED WHERE IT INTERFERES WITH CONSTRUCTION ACTIVITIES, OTHERWISE PIPING MAY BE ABANDONED BELOW GRADE. WHERE PIPING IS BROUGHT TO THE SURFACE, THE CONTRACTOR SHALL CUT IT OFF A MINIMUM OF 12" BELOW GRADE. DEPRESSIONS AND HOLES THAT ARE CREATED FROM REMOVING EXISTING IRRIGATION IMPROVEMENTS BEING REPLACED ARE TO BE FILLED WITH CLEAN TOPSOIL LEVEL WITH SURROUNDING GRADE AND COMPACTED. IRRIGATION SYSTEM AND BUILDING WATER ARE TO REMAIN INTACT AND OPERATIONAL.

7. CAMPUS IRRIGATION WATER AVAILABILITY NOTE: THE CONTRACTOR IS TO INSTALL ALL REROUTED MAINLINE PIPES WHILE LEAVING THE EXISTING IRRIGATION SYSTEM IN SERVICE DURING THE PROJECT. WHEN ALL PIPING AND WIRE REROUTING WORK IS COMPLETE THE CONTRACTOR MAY ARRANGE TO SHUT OFF THE WATER TO MAKE FINAL CONNECTIONS FOR A PERIOD OF TIME NOT TO EXCEED TWO DAYS. THE CAMPUS MAINTENANCE SUPERVISOR IS TO BE GIVEN A MINIMUM OF ONE WEEK WRITTEN NOTICE TO OVERWATER THE CAMPUS AREAS IN QUESTION PRIOR TO SHUTTING OFF THE WATER TO MAKE FINAL CONNECTIONS. IF PREVAILING WEATHER CONDITIONS ARE OVER 95 DEGREES DAYTIME HIGH TEMPERATURES, THEN THE SHUT DOWN DURATION MAY BE LIMITED TO NO MORE THAN ONE DAY AS DECIDED BY CAMPUS MAINTENANCE SUPERVISOR.

8. EXISTING TURF, PLANT & TREE TO REMAIN & PROTECT NOTE: EXISTING TURF, PLANT MATERIAL OR TREES THAT ARE DAMAGED DUE TO CONSTRUCTION ACTIVITIES, VEHICLE DAMAGE, AND STRESS DUE TO LACK OF WATER OR OTHER DETERIORATION OF THE EXISTING AREAS TO REMAIN ARE TO BE RESTORED BY THE CONTRACTOR TO THE EXISTING CONDITION PRIOR TO THE PROJECT AT NO ADDITIONAL COST TO THE DISTRICT. THIS INCLUDES DAMAGE THAT MAY OCCUR AT ANY AREA OF THE CAMPUS.

9. CONTRACTOR IS RESPONSIBLE FOR REMOVAL AND DISPOSAL OF ANY VEGETATION WITHIN THE PROJECT AREA THAT IS NOT CALLED TO REMAIN AND PROTECT. ANY ADJACENT LANDSCAPE AREAS OUTSIDE THE PROJECT AREA THAT ARE TO REMAIN AND PROTECT THAT ARE DAMAGED ARE TO BE REPAIRED AND RESTORED AT NO ADDITIONAL COST TO THE DISTRICT. CONTRACTOR IS TO VISIT THE SITE PRIOR TO BID TO VERIFY EXISTING CONDITIONS AND IMPROVEMENTS.

10. EXISTING IRRIGATION REMOTE CONTROL VALVES TO BE REMOVED NOTE: PRIOR TO ANY DEMOLITION WORK, CONTRACTOR IS TO FIELD VERIFY THAT ANY IRRIGATION SYSTEMS CONNECTED TO REMOTE CONTROL VALVES NOTED TO BE REMOVED HAVE NEW IRRIGATION PLANNED FOR THOSE AREAS. IF ANY IRRIGATION SYSTEM, OR PART THERE OF, IS LOCATED IN AN EXISTING AREA TO REMAIN & PROTECT, THE CONTRACTOR IS TO LEAVE THAT VALVE, OR A PORTION OF IT, IN SERVICE AS REQUIRED. NOTIFY THE LANDSCAPE ARCHITECT FOR DIRECTION. CONTRACTOR TO FIELD VERIFY.

11. ALL AREAS ADJACENT TO THE PROJECT AREA HAVE EXISTING IRRIGATION IMPROVEMENTS TO REMAIN & PROTECT. CONTRACTOR IS TO REPAIR ALL DAMAGE TO EXISTING IMPROVEMENTS THAT ARE INTENDED TO REMAIN & PROTECT TO MATCH EXISTING IMPROVEMENTS. DAMAGE MAY BE A DIRECT, INDIRECT RESULT OF THEIR WORK OR MAY BE CAUSED BY NEGLECT. CONTRACTOR TO FIELD VERIFY.

12. SEE LANDSCAPE IRRIGATION PLAN FOR WORK RELATING TO EXISTING SPRINKLERS AND LATERAL PIPING. CONTRACTOR TO FIELD VERIFY.

13. MANUAL IRRIGATION NOTE: THE CONTRACTOR IS RESPONSIBLE TO MANUALLY IRRIGATE ANY EXISTING IRRIGATION SYSTEM AREAS ON THE CAMPUS WHERE THE EXISTING AUTOMATIC OPERATION OF THE EXISTING SYSTEMS TO REMAIN AND PROTECT ARE INTERRUPTED DUE TO CONSTRUCTION ACTIVITIES. DEPENDING UPON PREVAILING WEATHER CONDITIONS, DAILY WATERING MAY BE REQUIRED AS REQUESTED BY THE CAMPUS MAINTENANCE SUPERVISOR. THIS MAY INCLUDE AN AREA NEAR 10 ACRES IN SIZE WITH DOZENS OF REMOTE CONTROL VALVES. THE CONTRACTOR IS TO CAREFULLY FIELD VERIFY AND COORDINATE WORK TO AVOID DAMAGING THE EXISTING PIPING OR WIRING THAT MAY REQUIRE MANUAL IRRIGATION OF THE SITE BY THE CONTRACTOR FOR EXTENDED PERIODS OF TIME.

14. IRRIGATION AS BUILT NOTE: LIMITED AREAS OF THE IRRIGATION AS BUILTS ARE SHOWN ON THE PLANS FOR CONVENIENCE AND ARE DIAGRAMMATIC IN NATURE. THE CONTRACTOR IS RESPONSIBLE FOR ALL THE INFORMATION ON THE COMPLETE IRRIGATION AS BUILT PLANS, AVAILABLE UPON REQUEST. CONTRACTOR IS TO FIELD VERIFY, TRACE AND POT HOLE ALL EXISTING IMPROVEMENTS PRIOR TO STARTING WORK.

15. THE CONTRACTOR IS RESPONSIBLE TO CAREFULLY EXAMINE THE SITE AND PLANS TO FIELD VERIFY ALL EXISTING CONCRETE, PATIOS, SIDEWALKS, PAVING AND OTHER HARDSCAPING TO REMAIN AND PROTECT TO DETERMINE THE SCOPE OF WORK REGARDING THE REQUIRED HORIZONTAL DIRECTIONAL BORING THAT WILL BE NECESSARY TO COMPLETE THE PROJECT. ALL EXISTING CONCRETE, PATIOS, SIDEWALKS, PAVING AND OTHER HARDSCAPED SURFACES MAY NOT BE SHOWN ON THE PLANS. IT IS THE CONTRACTORS RESPONSIBILITY TO FIELD VERIFY ALL LOCATIONS THAT MAY REQUIRE BORING, OR CUTTING AND PATCHING OF EXISTING HARDSCAPED SURFACES PRIOR TO BIDDING. GENERALLY, ALL HARDSCAPED SURFACE CROSSINGS ARE TO BE BY HORIZONTAL DIRECTIONAL BORING. THE CONTRACTOR MUST RECEIVE WRITTEN PERMISSION FROM THE DISTRICT PROJECT MANAGER TO SAW CUT AND PATCH ANY EXISTING HARDSCAPED SURFACES.

16. EXISTING REMOTE CONTROL VALVES AND IRRIGATION IMPROVEMENTS SHOWN ON THE PLAN ARE DIAGRAMMATIC. CONTRACTOR IS RESPONSIBLE TO FIELD LOCATE ALL IMPROVEMENTS AND PERFORM THE WORK OUTLINED AS SHOWN ON THE PLANS. CONTRACTOR IS TO TRACE EXISTING WIRING, POT HOLE AND USE ALL REASONABLE MEANS TO FIELD LOCATE EXISTING IMPROVEMENTS.

Water Usage Chart - MAWA vs. ETWU	
MAWA= (Et_o) x (0.62) x [(0.45 x LA) + (1.0 - 0.45) x SLA)] = (53.3) x (0.62) x [(0.45 x 76,111) + (1.0 - 0.45) x 55,191)] = 2,134,937 gallons per year	
ETWU (**Hydrozone #1 - Low- Bubblers**) ETWU= (Et_o) x (0.62) x [((PF) x (HA)) / (IE)] = (53.3) x (0.62) x [((0.2) x (7,683)) / (0.81)] = 62,689 gallons per year	ETWU (**Hydrozone #2 - Moderate - Bubblers**) ETWU= (Et_o) x (0.62) x [((PF) x (HA)) / (IE)] = (53.3) x (0.62) x [((0.5) x (3,096)) / (0.81)] = 63,155 gallons per year
ETWU (**Hydrozone #3 - Low - Sprays**) ETWU= (Et_o) x (0.62) x [((PF) x (HA)) / (IE)] = (53.3) x (0.62) x [((0.2) x (8,237)) / (0.75)] = 72,587 gallons per year	ETWU (**Hydrozone #4 - Moderate - Sprays**) ETWU= (Et_o) x (0.62) x [((PF) x (HA)) / (IE)] = (53.3) x (0.62) x [((0.5) x (1,904)) / (0.75)] = 41,946 gallons per year
Hydrozone #5 - SLA MAWA= (Et_o) x (0.62) x (SLA) = (53.3) x (0.62) x (55,191) = 1,823,842 gallons per year	
TOTAL ETWU (Sum of Hydrozones 1, 2, 3, 4 & 5) = 2,064,219 gallons per year	
MAWA > ETWU 2,134,937 gallons > 2,064,219 gallons ✓	

Hydrozone (HZ)	Plant Water Use Req.	Plant Factor (PF)	Hydrozone Area (sq ft) (HA)	Zone or Valve Numbers	Irrigation Method	Percent of Landscape Area	Irrigation Efficiency (IE)
1	Low	0.2	7,683	SEE PLANS	Bubblers	10%	0.81
2	Moderate	0.5	3,096	SEE PLANS	Bubblers	4%	0.81
3	Low	0.2	8,237	SEE PLANS	Sprays	11%	0.75
4	Moderate	0.5	1,904	SEE PLANS	Sprays	2%	0.75
3	SLA	N/A	55,191	SEE PLANS	Sprays	73%	N/A
		Sum	76,111				

IDENTIFICATION STAMP
DIV. OF THE STATE ARCHITECT
APP: 02-122821 INC: 2
REVIEWED FOR
SS ☑ FLS ☑ ACS ☑
DATE: 11/20/2025

Teter, Inc. expressly reserves its common law copyright and other property rights in these plans. This document, the ideas and designs incorporated herein, as an instrument of professional service, is not to be used in whole or in part, for any other project without prior written authorization.

MARK	DATE	DESCRIPTION
A	11/13/2025	DSA BACKCHECK

LANDSCAPE ARCHITECT — RLA # 3887 — 31 JULY 26 — STATE OF CALIFORNIA

TETER, INC.
FRESNO HEADQUARTERS
VISALIA| BAKERSFIELD | MODESTO | SAN LUIS OBISPO
ARCHITECTS ENGINEERS CONNECTED

VISALIA CAMPUS UNIVERSITY CENTER
COLLEGE OF THE SEQUOIAS
915 S. MOONEY BLVD
915 S MOONEY BLVD, VISALIA, CA 93277

DRAWING TITLE
LANDSCAPE & IRRIGATION DETAILS & NOTES

PROJECT NO. 22-12498

DRAWING L404.2

David Bigler Associates
Landscape Architect #3887
1589 W Shaw Ave, #5
Fresno, California 93711
E Mail: davebigler @aol.com
Tel: (559) 276-9486
Fax: (559) 276-9497

PLOT DATE: 10/1/2024 4:12:03 PM

\\tet-file1\Users\tara.chong_TETR\Documents\12498-A-UC_tara.chong.rvt

ABBREVIATIONS

ABBREVIATIONS: WHEN USED IN THESE DOCUMENTS SHALL CONFORM TO THE FOLLOWING LIST UNLESS OTHERWISE NOTED. DRAWINGS OF OTHER DISCIPLINES (SUCH AS CIVIL, STRUCTURAL, PLUMBING, MECHANICAL, AND ELECTRICAL) MAY CONTAIN SPECIFIC ABBREVIATIONS, REFERENCES, AND LEGENDS WITH INTERPRETATION INTENDED ONLY FOR THOSE DISCIPLINES.

&	AND
L	ANGLE
@	AT
℄	CENTERLINE
Ø	DIAMETER OR ROUND
⊥	PERPENDICULAR
#	POUND OR NUMBER
(E)	EXISTING
(N)	NEW
ABV.	ABOVE
A/C	AIR CONDITIONING
ACP	ASPHALT CONCRETE PAVING
ACST.	ACOUSTICAL
A.C.T.	ACOUSTIC CEILING TILE
A.B.	ANCHOR BOLT
ADA	AMERICANS WITH DISABILITIES ACT
ADAAG	ADA ACCESSIBLE GUIDELINES
ADDL.	ADDITIONAL
ADJ.	ADJUSTABLE
ADJC.	ADJACENT
A.F.F.	ABOVE FINISH FLOOR
A.F.G.	ABOVE FINISH GRADE
AGG.	AGGREGATE
ALT.	ALTERNATE
ALUM.	ALUMINUM
ANOD.	ANODIZED
A.P.C.	ACOUSTIC PANEL CEILING
APPROX.	APPROXIMATE
ARCH.	ARCHITECT(URAL)
AV	AUDIO VISUAL
BD.	BOARD
BEL.	BELOW
B.E.N	BOUNDARY EDGE NAILING
BLDG.	BUILDING
BLK.	BLOCK
BLKG.	BLOCKING
BM.	BEAM
BOT.	BOTTOM
BRG.	BEARING
BTWN.	BETWEEN
B.U.R.	BUILT-UP ROOF(ING)
C&G	CURB AND GUTTER
CAB.	CABINET
C.B.	CARRIAGE BOLT
CEM.	CEMENT
CER.	CERAMIC
C.F.	CUBIC FOOT
C.I.	CAST IRON
C.J.	CONSTRUCTION JOINT
C.L.	CENTER LINE
C.L.F.	CHAIN LINK FENCE
CLG.	CEILING
CLO.	CLOSET
CLR.	CLEAR
CL RM.	CLASS ROOM
CMU	CONCRETE MASONRY UNIT
CTR.	COUNTER
COL.	COLUMN
CONC.	CONCRETE
CONN.	CONNECTION
CONSTR.	CONSTRUCTION
CONT.	CONTINUOUS
CONTR.	CONTRACTOR
CPT.	CARPET
CRC	COLD ROLLED CHANNEL
CTR.	CENTER
CTSK	COUNTERSUNK
C.Y.	CUBIC YARD
D.A.	DISABLED ACCESS
DBL.	DOUBLE
DEMO	DEMOLISH/ DEMOLITION
D.F.	DRINKING FOUNTAIN OR DOUGLAS FIR
DET.	DETAIL
DIAG.	DIAGONAL
DIA.	DIAMETER
DIM.	DIMENSION
DISP.	DISPENSER
DN.	DOWN
DP.	DEEP
DS	DOWN SPOUT
DWG.(S)	DRAWING
DWR.	DRAWER
E	EAST
EA.	EACH
E.F.	EXHAUST FAN
EGR.	ENGINEER
E.J.	EXPANSION JOINT
EL.	ELEVATION
ELEC.	ELECTRIC(AL)
ELEV.	ELEVATOR
EMB.	EMBEDMENT
EMER.	EMERGENCY
E.M.R.	ELEVATOR MACHINE ROOM
E.N.	EDGE NAILING
ENCL.	ENCLOSURE
EQ.	EQUAL
EQUIP.	EQUIPMENT
EVAP.	EVAPORATIVE
E.W.	EACH WAY
EXH.	EXHAUST
EXST.	EXISTING
EXP.	EXPANSION
EXT.	EXTERIOR
FA.	FIRE ALARM
F.B.	FLAT BAR
F.B.O.	FURNISHED BY OWNER/OTHERS
F.D.	FLOOR DRAIN
F.D.C.	FIRE DEPARTMENT CONNECTION
FDN.	FOUNDATION
F.E.	FIRE EXTINGUISHER
F.E.C.	FIRE EXTINGUSHER CABINET
F.F.	FACTORY FINISH
F.FLR.	FINISH FLOOR
F.G.	FINISH GRADE
F.H.	FIRE HYDRANT
FHMS	FLAT HEAD MACHINE SCREW
FHWS	FLAT HEAD WOOD SCREW
FIN.	FINISH
FIXT.	FIXTURE
FLR.	FLOOR(ING)
FLASH.	FLASHING
FLUOR.	FLUORESCENT
F.O.	FACE OF
F.O.C.	FACE OF CONCRETE
F.O.F.	FACE OF FINISH
F.O.M.	FACE OF MASONRY
F.O.S.	FACE OF STUD
FRP	FIBERGLASS REIN-FORCED PANELING
F.S.	FIRE SPRINKLER(S)
F.S.H.	FIRE SPRINKLER HEAD
FT.	FOOT/FEET
FURR.	FURRING
FUT.	FUTURE
FV.	FIELD VERIFY
GA.	GAUGE
GALV.	GALVANIZED
G.B.	GRAB BAR
G.C.	GENERAL CONTR.
GEN.	GENERAL
G.I.	GALVANIZED IRON
GL.	GLASS
GND.	GROUND
GR.	GRADE
GYP.	GYPSUM
H.B.	HOSE BIBB
HBD.	HARDBOARD
H.C.	HOLLOW CORE
HD.	HEAD
H.D.	HEAVY DUTY
HDR.	HEADER
HDW.	HARDWARE
HDWD.	HARDWOOD
H.M.	HOLLOW METAL
H.M.D.	HOLLOW METAL DOOR
H.M.F.	HOLLOW METAL FRAME
HORIZ.	HORIZONTAL
HR.	HOUR
HT.	HEIGHT
HVAC	HEATING/VENTIL-ATING/AIR COND-ITIONING
HWY	HIGH WAY
I.D.	INSIDE DIAMETER/ DIMENSION
INFO	INFORMATION
INSUL.	INSULATION
INT.	INTERIOR
JAN.	JANITOR
JT.	JOINT
KIT.	KITCHEN
K.O.	KNOCK OUT
K.O.P.	KNOCK OUT PANEL
LAB.	LABORATORY
LAM.	LAMINATE
LAV.	LAVATORY
LB(S)	POUND (POUNDS)
L.B.	LAG BOLT
L.F.	LINEAL FOOT
L.H.	LEFT HAND
LIB.	LIBRARY
LT.	LIGHT
LT.WT.	LIGHT WEIGHT
MACH.	MACHINE
MAINT.	MAINTENANCE
MAX.	MAXIMUM
M.B.	MACHINE BOLT
M.B.M.	METAL BUILDING MANUFACTURER
MECH.	MECHANICAL
MED.	MEDIUM
MEMB.	MEMBRANE
MET.	METAL
MFR.	MANUFACTURER
MH.	MANHOLE
MKR.	MARKER
MIN.	MINIMUM
MISC.	MISCELLANEOUS
M.O.	MASONRY OPENING
MTD.	MOUNTED
MTG.	MEETING
MULL.	MULLION
N	NORTH
N.I.C.	NOT IN CONTRACT
NO.	NUMBER
NOM.	NOMINAL
N.R.C.	NOISE REDUCTION COEFFICIENT
N.T.S.	NOT TO SCALE
OCC.	OCCUPANT LOAD
O.C.	ON CENTER
O.D.	OUTSIDE DIAMETER/ DIMENSION
OFF.	OFFICE
OFCI	OWNER FURNISHED, CONTR. INSTALLED
OFOI	OWNER FURNISHED, OWNER INSTALLED
O.F.R.D.	OVER FLOW ROOF DRAIN
O.H.	OPPOSITE HAND
O.H.C.D.	OVER HEAD COILING DOOR
O.H.M.S.	OVAL HEAD MACH. SCREW
O.H.W.S.	OVAL HEAD WOOD SCREW
OPNG.	OPENING
OPP.	OPPOSITE
O/	OVER
ORIG.	ORIGINAL
OVHD	OVER HEAD
OWJ	OPEN WEB JOIST
P.B.N.	PLYWOOD BOUNDARY NAILING
P.E.N.	PLYWOOD EDGE NAILING
P.E.S.	PLYWOOD EDGE SCREWS
P.I.V.	POST INDICATOR VALVE
P.LAM.	PLASTIC LAMINATE
P.L.	PROPERTY LINE
PL.	PLATE
PLAS.	PLASTER
PLYWD.	PLYWOOD
PR.	PAIR
PSF	POUNDS PER SQUARE FOOT
PSI	POUNDS PER SQUARE INCH
PT.	POINT
P.T.D.	PAPER TOWEL DISP.
P.T.D.F.	PRESSURE TREATED DOUGLAS FIR
PTN.	PARTITION
PVC	POLYVINYL CHLORIDE
R.	RADIUS
R	THERMAL RESISTANCE
R.A.	RETURN AIR
R.D.	ROOF DRAIN
REFL.	REFLECTED
REFR.	REFRIGERATOR
REINF.	REINFORCED
REM.	REMOVE
REQD.	REQUIRED
RESIL.	RESILIENT
R.H.	RIGHT HAND
R.H.W.S.	ROUND HEAD WOOD SCREW
RM.	ROOM
R.O.	ROUGH OPENING
R.O.W.	RIGHT-OF-WAY
RWD.	REDWOOD
RWL	RAIN WATER LEADER
S	SOUTH
S.A.	SUPPLY AIR
S.C.	SOLID CORE
SCH.	SCHEDULE
S.D.	STORM DRAIN
SECT.	SECTION
SF	SQUARE FEET/FOOT
SHR.	SHOWER
SHTG.	SHEATHING
SIM.	SIMILAR
S.M.	SHEET METAL
S.O.G.	SLAB-ON-GRADE
SPEC(S).	SPECIFICATION(S)
SPKR.	SPEAKER
SQ.	SQUARE
S.S.	STAINLESS STEEL
STA.	STATION
STC	SOUND TRANS-MISSION CLASS
STD.	STANDARD
STL.	STEEL
STO.	STORAGE
STRUCT.	STRUCTURAL
SUSP.	SUSPENDED
S.W.	SIDE WALK
SYM.	SYMMETRICAL
T.C.	TOP OF CONCRETE
TEMP.	TEMPORARY
TMPD.	TEMPERED
T&G	TONGUE AND GROOVE
THD.	THREADED
THK.	THICK
T.I.	TENANT IMPROVEMENT
TK.BD.	TACK BOARD
T.O.S.	TOP OF STRUCTURE
T.P.	TOP OF PAVEMENT
TS	TUBE STEEL
TEL.	TELEPHONE
TTB	TELEPHONE TERM-INAL BACK BD.
TV	TELEVISION
TYP.	TYPICAL
U.G.	UNDERGROUND
U.N.O.	UNLESS NOTED OTHERWISE
UR.	URINAL
VCT	VINYL COMPOSITION TILE
VERT.	VERTICAL
VTR.	VENT TO ROOF
VWC	VINYL WALL COVERING
W	WEST OR WIDTH/WIDE
W/	WITH
W.C.	WATER CLOSET
W.CH.	WHEEL CHAIR
WD.	WOOD
WDW.	WINDOW
WF	WIDE FLANGE
W.H.	WATER HEATER
W/O	WITHOUT
W.P.	WATERPROOF
W.S.	WOOD SCREW
WT.	WEIGHT
WWF	WELDED WIRE FABRIC
XFMR	TRANSFORMER

CODES AND ORGANIZATIONS ABBREVIATIONS

CBC	CALIFORNIA BUILDING CODE
CEC	CALIFORNIA ELECTRICAL CODE
CFC	CALIFORNIA FIRE CODE
CMC	CALIFORNIA MECHANICAL CODE
CPC	CALIFORNIA PLUMBING CODE
DSA	DIVISION OF THE STATE ARCHITECT
ICBO	INTERNATIONAL CONFERENCE OF BUILDING OFFICIALS
NSF	NATIONAL SANITATION FOUNDATION
NFPA	NATIONAL FIRE PROTECTION ASSOCIATION
NEC	NATIONAL ELECTRICAL CODE

TYPICAL SYMBOLS

SYMBOLS

∠	ANGLE
Φ	DIAMETER OR ROUND
⊥	PERPENDICULAR
&	AND
@	AT
℄	CENTER LINE
#	POUND OR NUMBER

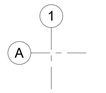

STATION LINE

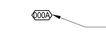

DOOR SYMBOL

DOOR REFERENCE

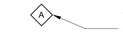

WINDOW SYMBOL

WINDOW REFERENCE



KEYNOTE SYMBOL

KEYNOTE REFERENCE, REFER TO KEYNOTE LIST ON SHEET



WORK POINT, CONTROL POINT OR DATUM POINT



WALL SYMBOL

WALL REFERENCE



SECTION

LOCATION ON SHEET REFERENCED

SHEET NUMBER WHERE SECTION IS LOCATED

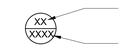

DETAIL

LOCATION ON SHEET REFERENCED

SHEET NUMBER WHERE DETAIL IS LOCATED



ROOM IDENTIFICATION

ROOM NAME

ROOM NUMBER

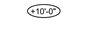

CEILING HEIGHT

IDENTIFICATION STAMP
DIV. OF THE STATE ARCHITECT
APP: 02-122821 INC: 2
REVIEWED FOR
SS ☑ FLS ☑ ACS ☑
DATE: 11/20/2025

Teter, Inc. expressly reserves its common law copyright and other property rights in these plans. This document, the ideas and designs incorporated herein, as an instrument of professional service, is not to be used in whole or part, for any other project without prior written authorization.

MARK	DATE	DESCRIPTION
A	11/13/2025	DSA BACKCHECK



TETER, INC.
FRESNO HEADQUARTERS
VISALIA | BAKERSFIELD | MODESTO | SAN LUIS OBISPO
ARCHITECTS ENGINEERS CONNECTED

TETER

VISALIA CAMPUS UNIVERSITY CENTER
COLLEGE OF THE SEQUOIAS - INCREMENT 2
915 S. MOONEY BLVD
VISALIA, CALIFORNIA

DRAWING TITLE
LEGENDS AND ABBREVIATIONS (INCREMENT 2)

PROJECT NO.
22-12498

DRAWING
A000.2

PLOT DATE: 11/10/2025 8:45:02 AM

\\tet-file1\Users\tara.chong_TETR\Documents\12498-A-UC_tara.chong.rvt

PLOT DATE: 11/10/2025 8:45:13 AM

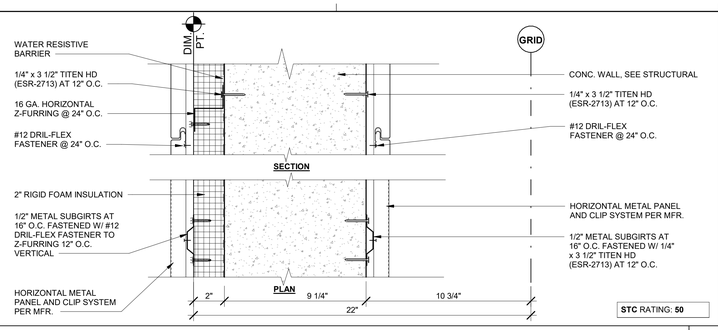

STC RATING: **50**

EXTERIOR WALL - METAL PANEL ON CONC. WALL — 3" = 1'-0" — 8A

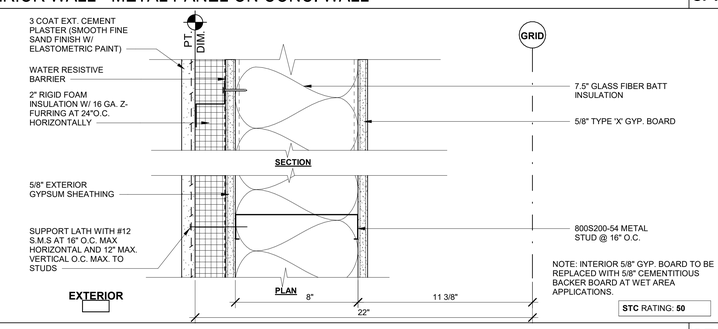

NOTE: INTERIOR 5/8" GYP. BOARD TO BE REPLACED WITH 5/8" CEMENTITIOUS BACKER BOARD AT WET AREA APPLICATIONS.

STC RATING: **50**

EXTERIOR WALL - CEMENT PLASTER — 3" = 1'-0" — 8B

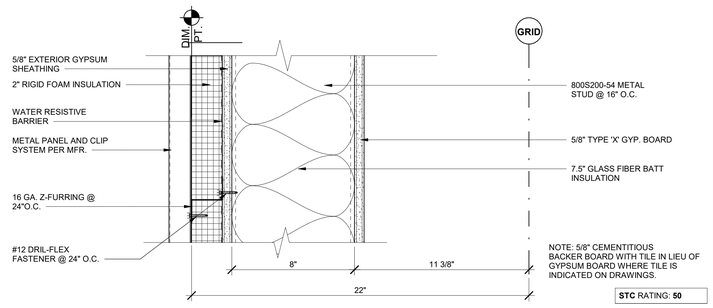

NOTE: 5/8" CEMENTITIOUS BACKER BOARD WITH TILE IN LIEU OF GYPSUM BOARD WHERE TILE IS INDICATED ON DRAWINGS.

STC RATING: **50**

EXTERIOR WALL - METAL PANEL — 3" = 1'-0" — 8C

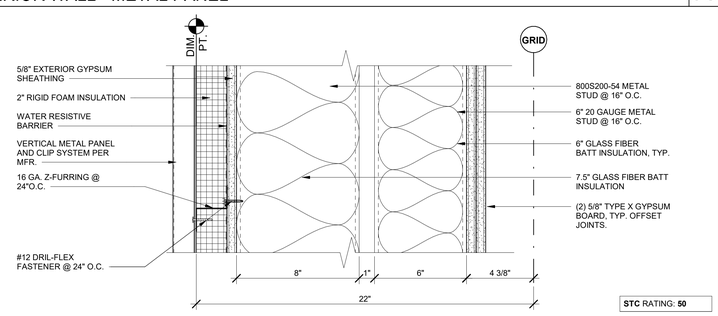

STC RATING: **50**

EXTERIOR WALL - METAL PANEL — 3" = 1'-0" — 8D

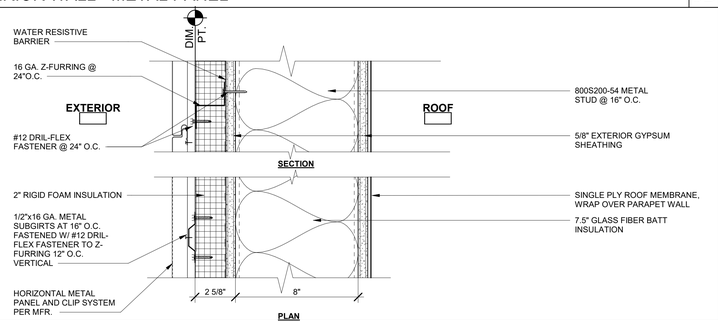

EXTERIOR WALL - METAL PANEL — 3" = 1'-0" — 8F

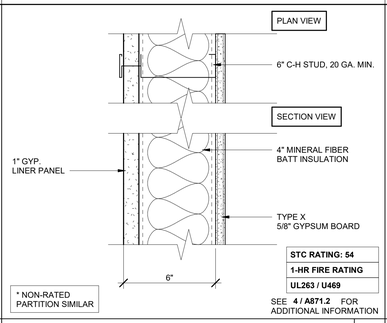

* NON-RATED PARTITION SIMILAR

STC RATING: **54**
1-HR FIRE RATING
UL263 / U469

SEE **4 / A871.2** FOR ADDITIONAL INFORMATION

INT. SHAFT WALL — 3" = 1'-0" — 6H

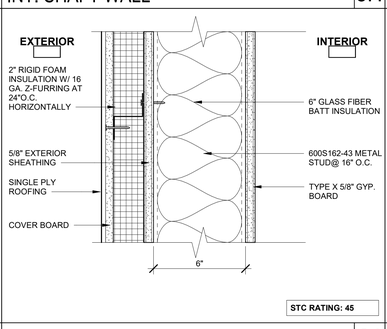

STC RATING: **45**

EXT. SKYLIGHT WALL — 3" = 1'-0" — 6J

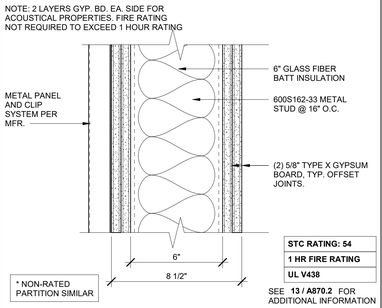

* NON-RATED PARTITION SIMILAR

STC RATING: **54**
1 HR FIRE RATING
UL W438

SEE **13 / A870.2** FOR ADDITIONAL INFORMATION

INT. WALL w/ METAL PANEL — 3" = 1'-0" — 6K

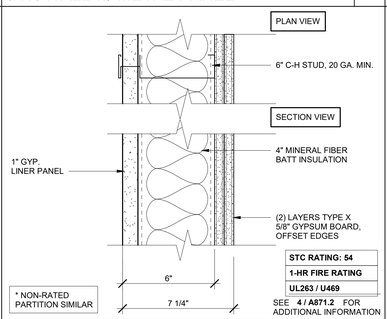

* NON-RATED PARTITION SIMILAR

STC RATING: **54**
1-HR FIRE RATING
UL263 / U469

SEE **4 / A871.2** FOR ADDITIONAL INFORMATION

INT. SHAFT WALL — 3" = 1'-0" — E1

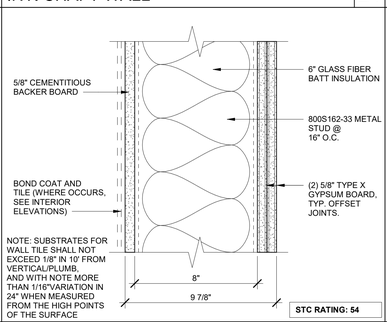

NOTE: SUBSTRATES FOR WALL TILE SHALL NOT EXCEED 1/8" IN 10' FROM VERTICAL/PLUMB, AND WITH NOTE MORE THAN 1/16"VARIATION IN 24" WHEN MEASURED FROM THE HIGH POINTS OF THE SURFACE

STC RATING: **54**

INT. WALL @ RESTROOM — 3" = 1'-0" — 8E

NOTE: 2 LAYERS GYP. BD. EA. SIDE FOR ACOUSTICAL PROPERTIES. FIRE RATING NOT REQUIRED TO EXCEED 1 HOUR RATING

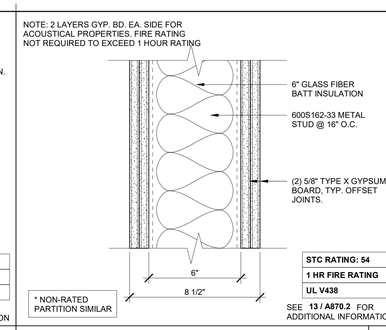

* NON-RATED PARTITION SIMILAR

STC RATING: **54**
1 HR FIRE RATING
UL V438

SEE **13 / A870.2** FOR ADDITIONAL INFORMATION

INT. WALL w/ GYP BD — 3" = 1'-0" — 6C

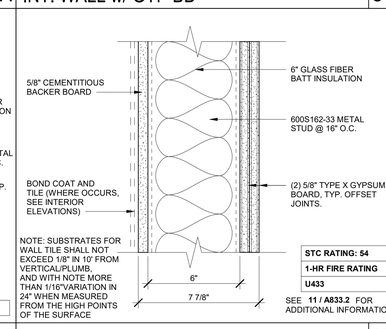

NOTE: SUBSTRATES FOR WALL TILE SHALL NOT EXCEED 1/8" IN 10' FROM VERTICAL/PLUMB, AND WITH NOTE MORE THAN 1/16"VARIATION IN 24" WHEN MEASURED FROM THE HIGH POINTS OF THE SURFACE

STC RATING: **54**
1-HR FIRE RATING
U433

SEE **11 / A833.2** FOR ADDITIONAL INFORMATION

INT. WALL @ RESTROOM — 3" = 1'-0" — 6D

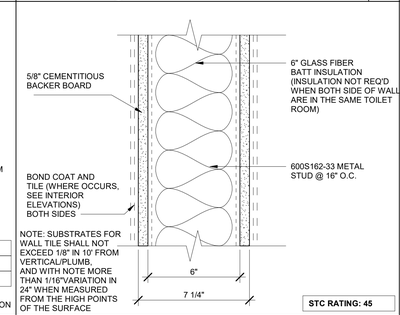

NOTE: SUBSTRATES FOR WALL TILE SHALL NOT EXCEED 1/8" IN 10' FROM VERTICAL/PLUMB, AND WITH NOTE MORE THAN 1/16"VARIATION IN 24" WHEN MEASURED FROM THE HIGH POINTS OF THE SURFACE

STC RATING: **45**

INT. WALL @ RESTROOM — 3" = 1'-0" — 6E

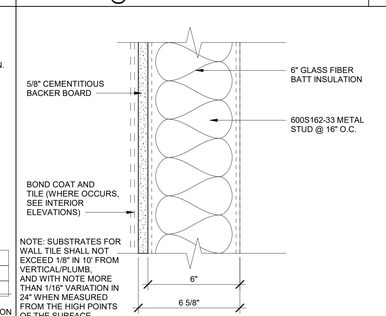

* NON-RATED PARTITION SIMILAR

STC RATING: **45**
1-HR FIRE RATING
UL 263 / U419

INT. WALL @ RESTROOM — 3" = 1'-0" — 6F

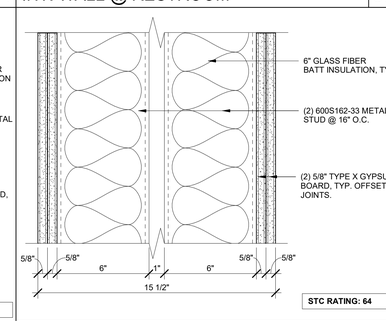

STC RATING: **64**

INT. WALL @ LECTURE — 3" = 1'-0" — 6G

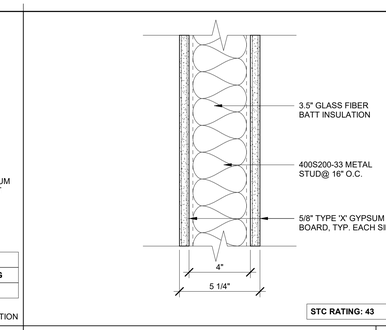

STC RATING: **43**

INT. WALL w/ GYP. BD — 3" = 1'-0" — 4A

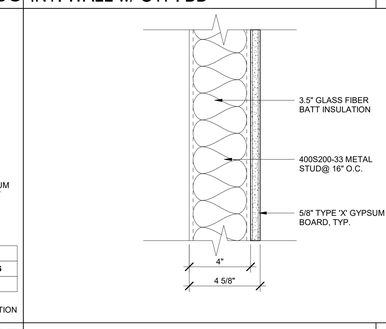

INT. WALL w/ GYP. BD — 3" = 1'-0" — 4B

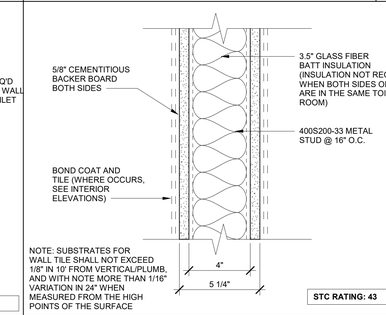

NOTE: SUBSTRATES FOR WALL TILE SHALL NOT EXCEED 1/8" IN 10' FROM VERTICAL/PLUMB, AND WITH NOTE MORE THAN 1/16" VARIATION IN 24" WHEN MEASURED FROM THE HIGH POINTS OF THE SURFACE

STC RATING: **43**

INT. WALL @ RESTROOM — 3" = 1'-0" — 4C

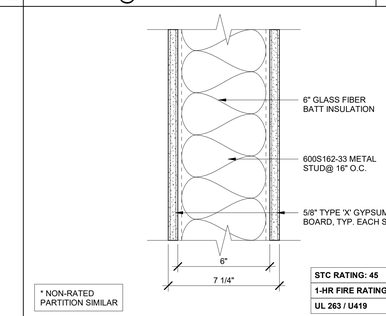

* NON-RATED PARTITION SIMILAR

STC RATING: **43**

INT. WALL GYP (1) SIDE — 3" = 1'-0" — 6B

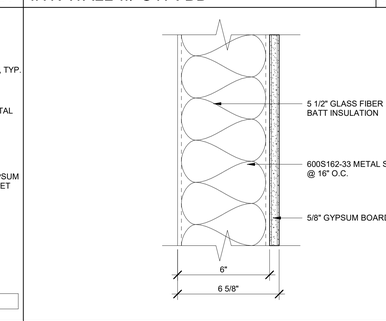

WALL HEIGHT TYPES

A. SEE DIMENSIONS AND FLOOR PLANS FOR MORE INFORMATION.

B. ALL INTERIOR WALLS ARE DIMENSIONED TO FACE OF STUD, U.N.O.

C. WALL TYPES SHOWN ARE BASIS OF DESIGN. SEE STRUCTURAL FOR ADDITIONAL INFORMATION.

D. WALL TYPES ARE DRAWN AS VERTICAL SECTION OF WALL.

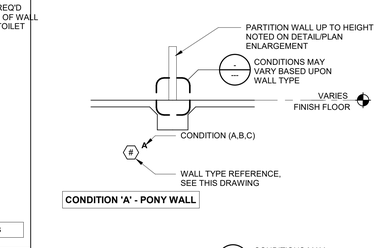

CONDITION 'A' - PONY WALL

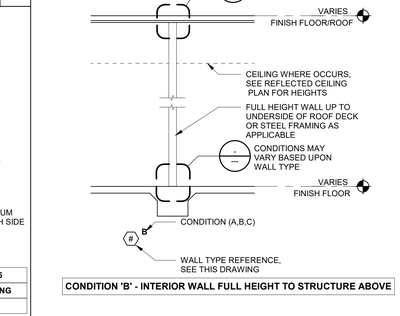

CONDITION 'B' - INTERIOR WALL FULL HEIGHT TO STRUCTURE ABOVE

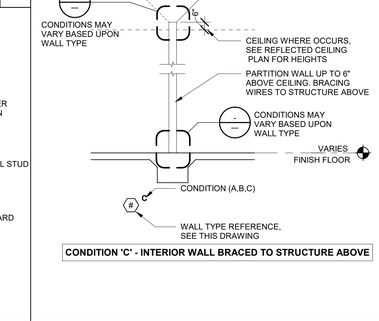

CONDITION 'C' - INTERIOR WALL BRACED TO STRUCTURE ABOVE

PARTITION TYPES — N.T.S. — 5

IDENTIFICATION STAMP
DIV. OF THE STATE ARCHITECT
APP: 02-122821 INC: 2
REVIEWED FOR
SS ☑ FLS ☑ ACS ☑
DATE: 11/20/2025

Teter, Inc. expressly reserves its common law copyright and other property rights in these plans. This document, the ideas and designs incorporated herein, as an instrument of professional service, is not to be used in whole or in part, for any other project without prior written authorization.

MARK	DATE	DESCRIPTION
A	11/13/2025	DSA BACKCHECK

TETER, INC.
FRESNO HEADQUARTERS
VISALIA | BAKERSFIELD | MODESTO | SAN LUIS OBISPO
ARCHITECTS ENGINEERS CONNECTED

VISALIA CAMPUS UNIVERSITY CENTER
COLLEGE OF THE SEQUOIAS - INCREMENT 2
915 S. MOONEY BLVD
VISALIA, CALIFORNIA

DRAWING TITLE
PARTITION TYPES

PROJECT NO.
22-12498

DRAWING
A001.2

\\teh-file1\Users\Gerardo.Juarez_TETR\Documents\12632-A-COS Promenade_gerardo.juarez7Z6UR.rvt

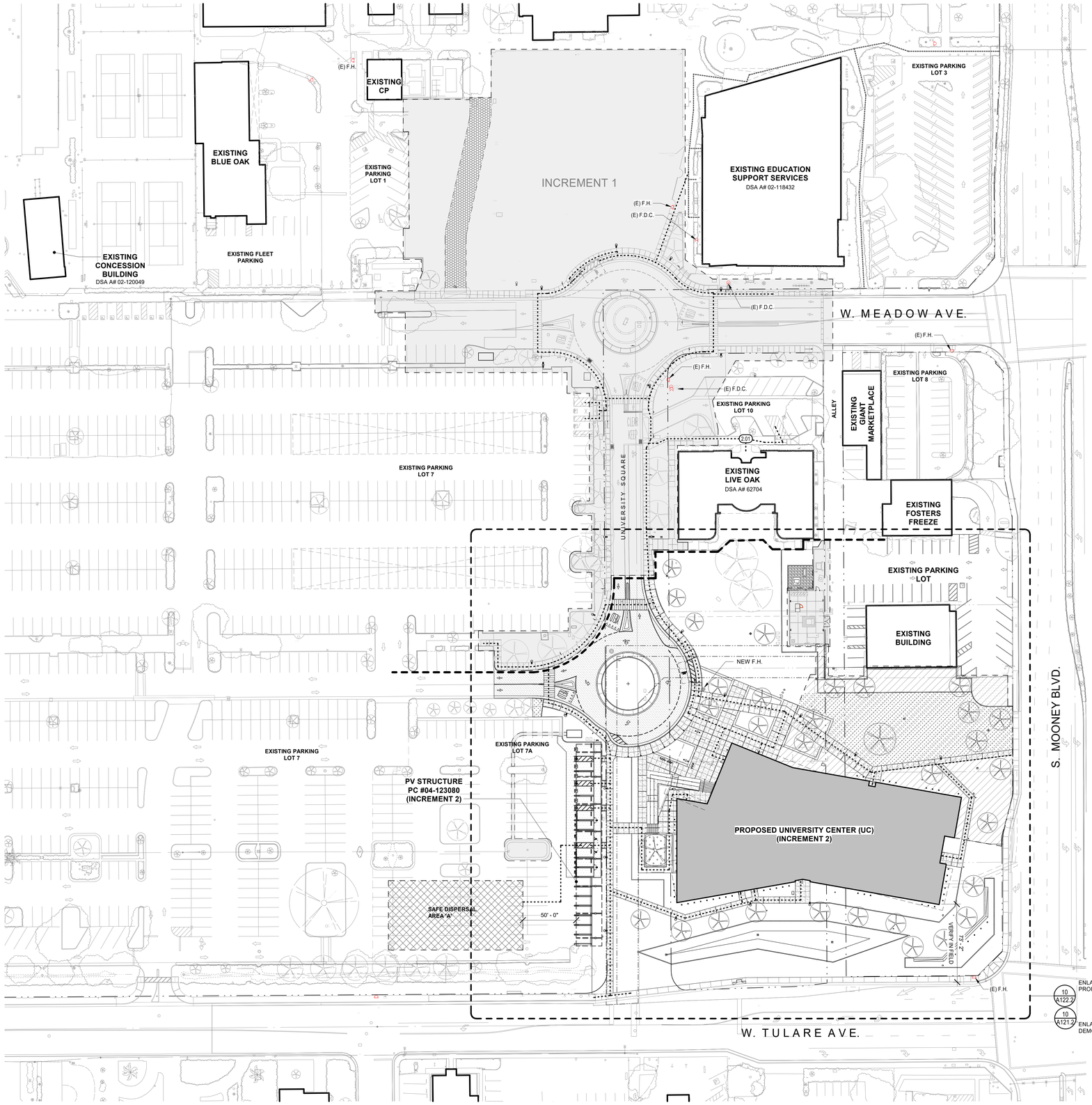

PROPOSED SITE PLAN (INCREMENT 2) — 1" = 40'-0" — 10

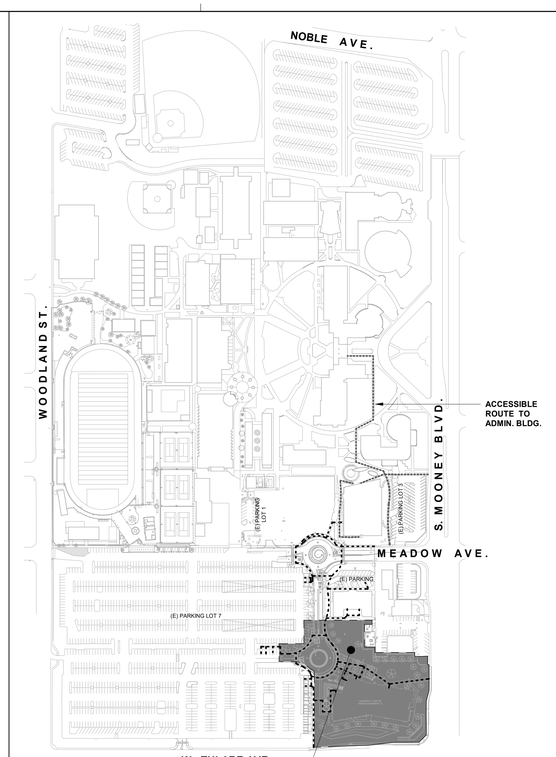

OVERALL CAMPUS/ KEYPLAN — N.T.S. — 7

LEGEND

- EXISTING BUILDING TO REMAIN NOT INCLUDED IN SCOPE OF WORK
- SITE IMPROVEMENTS (UNDER INCREMENT 1)
- PROPOSED NEW UNIVERSITY CENTER BUILDING, (UNDER INCREMENT 2)
- CONCRETE PAVING, SEE CIVIL **A/X101.2**
- HEAVY DUTY ASPHALT PAVING, SEE CIVIL **C/X101.2**
- SEQUENCE OF CONSTRUCTION (INCREMENT 2) TO START AFTER APRIL 2026, REFER TO ARCHITECT
- 20'-0" WIDE TEMPORARY FIRE ACCESS LANE, UNDER (INCREMENT 1)
- (E) F.H. — EXISTING FIRE HYDRANT
- AREA OF WORK IN SCOPE
- PROPERTY LINE
- EXISTING ACCESSIBLE ROUTE, PER **DSA A # 02-118432**
- PROPOSED ACCESSIBLE ROUTE (2022 C.B.C. SECTION 11B - 206), REFER TO SHEET G100.2 FOR ADDITONAL INFORAMTION

AREA OFSAFE DISPERSAL 'A'

- UNIVERSITY CENTER (UC): 1,549 OCCUPANTS
- PV SHADE SHADE STRUCTURE: 23 OCCUPANTS

TOTAL: 1,572

1,572 TOTAL OCCUPANTS x 5 S.F. PER PERSON = 7860 S.F. REQUIRED

8,190 S.F. SAFE DISPERSAL AREA PROVIDED

'A' — AREA OF SAFE DISPERAL

GENERAL NOTES

A. SEE CIVIL, LANDSCAPE AND STRUCTURAL SCOPE MAY AFFECT AREAS NOT NOTED IN ARCHITECTURAL DRAWINGS.

B. EXCAVATIONS SHALL BE ADEQUATELY SHORED, BRACED & SHEETED SO THAT THE EARTH WILL NOT SLIDE OR SETTLE & SO THAT ALL EXISTING IMPROVEMENTS OF ANY KIND WILL BE FULLY PROTECTED FROM DAMAGE. WHERE THE EXCAVATION FOR A CONDUIT TRENCH, AND/OR STRUCTURE IS FIVE FEET OR MORE IN DEPTH, THE CONTRACTOR SHALL PROVIDE ADEQUATE SHEETING, WHICH SHALL CONFORM TO THE APPLICABLE CONSTRUCTION SAFETY ORDERS OF THE DIVISION OF INDUSTRIAL SAFETY OF THE STATE OF CALIFORNIA. THE CONTRACTOR SHALL ALWAYS COMPLY WITH OSHA REQUIREMENTS.

C. FINISH GRADE SHALL HAVE A 1.5% SLOPE AWAY FROM THE BLDG. FOR A DISTANCE NOT LESS THAN 5'-0" FROM THE BLDG.

D. EXTERIOR CONC. LANDINGS AT DOORS SHALL NOT BE MORE THAN 1/2 INCH LOWER THAN DOORWAY THRESHOLD WITH 1/4 INCH PER FOOT SLOPE MAX.

E. REFER TO CIVIL, LANDSCAPE, PLUMBING & ELECTRICAL FOR UTILITY INFORMATION. CONTRACTOR TO COORDINATE ALL TRADES TO MAINTAIN PROPER CLEARANCES & AVOID CONFLICTS.

IDENTIFICATION STAMP
DIV. OF THE STATE ARCHITECT
APP: 02-122821 INC: 2
REVIEWED FOR
SS ☑ FLS ☑ ACS ☑
DATE: 11/20/2025

Teter, Inc. expressly reserves its common law copyright and other property rights in these plans. This document, the ideas and designs incorporated herein, as an instrument of professional service, is not to be used in whole or in part, for any other project without prior written authorization.

MARK	DATE	DESCRIPTION
A.	11/13/2025	DSA BACKCHECK

DSA APPROVED

TETER, INC.
ARCHITECTS ENGINEERS CONNECTED
FRESNO HEADQUARTERS
VISALIA | BAKERSFIELD | MODESTO | SAN LUIS OBISPO

TETER

VISALIA CAMPUS UNIVERSITY CENTER
COLLEGE OF THE SEQUOIAS
915 S. MOONEY BLVD
915 S MOONEY BLVD, VISALIA, CA 93277

DRAWING TITLE
PROPOSED SITE PLAN (INC. 2)

PROJECT NO.
22-12498

DRAWING
A120.2

PLOT DATE: 9/9/2025 10:58:38 AM

\\tet-file1\Users\Gerardo.Juarez_TETR\Documents\12632-A-COS Promenade_gerardo.juarez7Z8UR.rvt

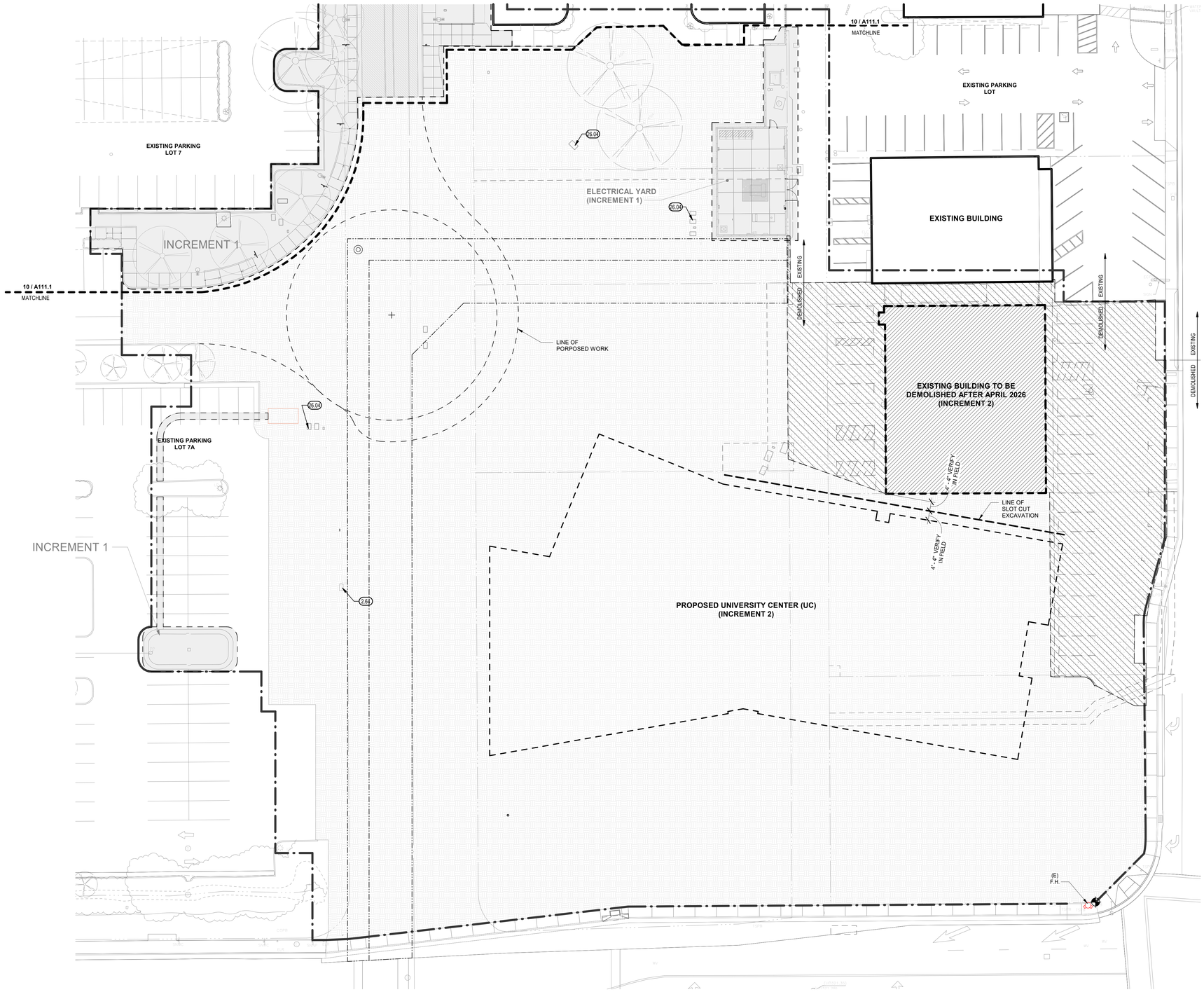

KEYNOTES

2.64 REMOVE EXISTING IRRIGATION CONTROLLER AND REPLACE, EXISTING ELECTRICAL POWER TO REMAIN INTACT.

26.04 PULL BOX, SEE ELECTRICAL

LEGEND

- EXISTING BUILDING TO REMAIN NOT INCLUDED IN SCOPE OF WORK
- PROPOSED NEW BUILDING PAD FOOTPRINT (INCREMENT 1), SEE CIVIL
- SITE IMPROVEMENTS (UNDER INCREMENT 1)
- DEMOLISH EXISTING BUILDING STRUCTURE, EQUIPMENT, AND FOUNDATIONS. REMOVE PORTION OF EXISTING UTILITIES UNDER PROPOSED SITE DEVELOPMENT. CAP EXISTING LINES BELOW GRADE AND OUTSIDE OF PROPOSED SITE DEVELOPMENT, COORDINATE WITH CIVIL
- AREA OF DEMOLITION, COORDINATE WITH CIVIL - CAP EXISTING UTILITIES BELOW GRADE
- FINISH GRADE, SEE CIVIL
- TURF, SEE LANDSCAPE
- POLE MOUNTED LIGHT FIXTURE, SEE ELECTRICAL
- (E) F.H. EXISTING FIRE HYDRANT
- AREA OF WORK IN SCOPE
- UTILITY EASEMENT, SEE CIVIL, ELECTRICAL, AND PLUMBING (UNDER INCREMENT 1)

GENERAL NOTES

A. ALL ITEMS INDICATED AS EXISTING ARE TO REMAIN - PROTECT FROM DAMAGE.

B. DEMOLITION ITEMS INDICATED ON THE PLANS DESCRIBE A SPECIFIC ITEM AND DO NOT CONSTITUTE THE COMPLETE EXTENT OF DEMOLITION REQUIRED FOR THE PROPOSED IMPROVEMENTS. CONTRACTOR SHALL PERFORM ALL DEMOLITION REQUIRED FOR THE INSTALLATION OF NEW IMPROVEMENTS. DEMOLITION TO BE COORDINATED IN FIELD WITH CIVIL DRAWINGS, MECHANICAL DRAWINGS, PLUMBING DRAWINGS, ELECTRICAL DRAWINGS, FIRE ALARM DRAWINGS, ETC. AND ASSOCIATED TRADES.

1. SEE SPECIFICATIONS FOR ADDITIONAL INFORMATION REGARDING SELECTIVE DEMOLITION REQUIREMENTS.
2. COORDINATE WITH RESPECTIVE TRADES FOR THE EXTENT OF DEMOLITION REQUIRED TO PROPERLY INSTALL PROPOSED IMPROVEMENTS.

C. ALL EXISTING UTILITY ITEMS THAT ARE NOT TO BE RE-USED ARE TO BE REMOVED (CONDUITS, RACEWAYS, DUCTWORK, PIPING, WIRING, ETC.). COORDINATE WITH PROPOSED IMPROVEMENTS.

D. THE CONTRACTOR SHALL ACCEPT THE SITE IN ITS PRESENT CONDITION & DEMOLISH AND/OR REMOVE FROM THE AREA OF THE PROJECT ALL EXISTING STRUCTURES, BOTH SURFACE & SUBSURFACE, TREES, BRUSH, ROOTS, DEBRIS, ORGANIC MATTER, & ALL OTHER MATTER DETERMINED BY THE INSPECTOR TO BE DELETERIOUS. SUCH MATERIAL SHALL BE REMOVED FROM THE SITE BY THE CONTRACTOR.

E. EXISTING UNDERGROUND UTILITIES & IMPROVEMENTS ARE SHOWN IN THEIR APPROX. LOCATIONS BASED UPON RECORD INFO. AVAILABLE TO THE ARCHITECT AT THE TIME OF PREPARATION OF THESE PLANS. LOCATIONS MAY NOT HAVE BEEN VERIFIED IN THE FIELD & NO GUARANTEE IS MADE AS TO THE ACCURACY OR COMPLETENESS OF THE INFO. SHOWN. THE CONTRACTOR SHALL NOTIFY UTILITY COMPANIES AT LEAST 2 WORKING DAYS IN ADVANCE OF CONSTRUCTION TO FIELD LOCATE UTILITIES. CALL UNDERGROUND SERVICE ALERT (U.S.A.), 1-800-642-2444.

IDENTIFICATION STAMP
DIV. OF THE STATE ARCHITECT
APP: 02-122821 INC: 2
REVIEWED FOR
SS ☑ FLS ☑ ACS ☑
DATE: 11/20/2025

Teter, Inc. expressly reserves its common law copyright and other property rights in these plans. This document, the ideas and designs incorporated herein, as an instrument of professional service, is not to be used in whole or in part, for any other project without prior written authorization.

MARK	DATE	DESCRIPTION
A.	11/13/2025	DSA BACKCHECK

TETER, INC.
FRESNO HEADQUARTERS
VISALIA | BAKERSFIELD | MODESTO | SAN LUIS OBISPO
ARCHITECTS ENGINEERS CONNECTED

VISALIA CAMPUS UNIVERSITY CENTER
COLLEGE OF THE SEQUOIAS
915 S. MOONEY BLVD
915 S MOONEY BLVD, VISALIA, CA 93277

DRAWING TITLE
DEMOLITION ENLARGED SITE PLAN - SOUTH (INC. 2)

PROJECT NO.
22-12498

DRAWING
A121.2

\\tet-file1\Users\Gerardo.Juarez_TETR\Documents\12632-A-COS Promenade_gerardo.juarez7Z6URR.rvt

EXISTING PARKING LOT 7

EXISTING PARKING LOT 7A

EXISTING PARKING LOT

EXISTING BUILDING

ELECTRICAL YARD (INCREMENT 1)

PROPOSED UNIVERSITY CENTER (UC) (INCREMENT 2)

PV STRUCTURE PC 04-123080 (INCREMENT 2)

SITE WALL 'A'

VERIFY IN FIELD

S. MOONEY BLVD.

W. TULARE AVE.

20' - 10" | 32' - 3" | 76' - 8" | 4' - 1" | 64' - 6" | 5' - 11" | 72' - 1" | 63' - 8" VERIFY IN FIELD

10 / A111.1 MATCHLINE

10 A125.2

10 A124.2 PROPOSED ENLARGED SITE PLAN

10 A126.2

4 A127.2

3 A128.2

8 A129.2

NORTH

PROPOSED ENLARGED SITE PLAN - SOUTH

1" = 20'-0" | 10

KEYNOTES

0.01	LINE OF FLOOR ABOVE
0.02	LINE OF ROOF ABOVE, (TYP.)
10.18	BESS SIGNAGE, SEE **23 / A132.2**
26.04	PULL BOX, SEE ELECTRICAL
26.31	IN-GROUND LIGHT FIXTURE (TYP.), SEE ELECTRICAL
26.34	NEW BATTERY ENERGY STORAGE SYSTEM 'BESS', SEE ELECTRICAL
32.09	CONCRETE RETAINING CURB, SEE **17 / A132.2**
32.14	6" WIDE CONCRETE CURB, TYP.
32.16	24" WIDE CONCRETE CURB, SEE **5 / A132.2**
32.22	CONCRETE SEATING WALL, SEE **4 / A132.2**
32.75	BICYCLE RACK (TYP.), SEE **10 / A132.2**
32.81	TREE; SEE LANDSCAPE (TYP.)
32.87	IRRIGATION PUMP, SEE LANDSCAPE
32.88	IRRIGATION CONTROLLER, SEE LANDSCAPE
32.89	IRRIGATION BACK FLOW PREVENTER, SEE CIVIL

LEGEND

- EXISTING BUILDING TO REMAIN NOT INCLUDED IN SCOPE OF WORK
- NEW UNIVERSITY CENTER BUILDING, (UNDER INCREMENT 2)
- SITE IMPROVEMENTS (UNDER INCREMENT 1)
- CONCRETE PAVING, SEE CIVIL **A/X101.2**
- NOTE: IF NOT INDICATED CONTRACTION JOINT AT 5'-0" O.C. MAX. AND ISOLATION JOINT AT 30'-0" O.C. MAX.
- HEAVY DUTY CONCRETE PAVING, SEE CIVIL **B/X101.2**
- STAMPED CONCRETE HEAVY DUTY CONCRETE PAVING
- HEAVY DUTY ASPHALT PAVING, SEE CIVIL **C/X101.2**
- PLANTER AREA, SEE LANDSCAPE & CIVIL
- FINISH GRADE, SEE CIVIL
- TURF, SEE LANDSCAPE
- DECOMPOSED GRANITE
- SEQUENCE OF CONSTRUCTION (INCREMENT 2) TO START AFTER APRIL 2026, COORDINATE WITH ARCHITECT
- POLE MOUNTED LIGHT FIXTURE, SEE ELECTRICAL
- (E) F.H. EXISTING FIRE HYDRANT
- AREA OF WORK IN SCOPE

GENERAL NOTES

A. SEE CIVIL, LANDSCAPE AND STRUCTURAL: SCOPE MAY AFFECT AREAS NOT NOTED IN ARCHITECTURAL DRAWINGS.

B. EXCAVATIONS SHALL BE ADEQUATELY SHORED, BRACED & SHEETED SO THAT THE EARTH WILL NOT SLIDE OR SETTLE & SO THAT ALL EXISTING IMPROVEMENTS OF ANY KIND WILL BE FULLY PROTECTED FROM DAMAGE. WHERE THE EXCAVATION FOR A CONDUIT TRENCH, AND/OR STRUCTURE IS FIVE FEET OR MORE IN DEPTH, THE CONTRACTOR SHALL PROVIDE ADEQUATE SHEETING, WHICH SHALL CONFORM TO THE APPLICABLE CONSTRUCTION SAFETY ORDERS OF THE DIVISION OF INDUSTRIAL SAFETY OF THE STATE OF CALIFORNIA. THE CONTRACTOR SHALL ALWAYS COMPLY WITH OSHA REQUIREMENTS.

C. FINISH GRADE SHALL HAVE A 1.5% SLOPE AWAY FROM THE BLDG. FOR A DISTANCE NOT LESS THAN 5'-0" FROM THE BLDG.

D. EXTERIOR CONC. LANDINGS AT DOORS SHALL NOT BE MORE THAN 1/2 INCH LOWER THAN THE TOP OF THE DOORWAY THRESHOLD WITH 1/4 INCH PER FOOT SLOPE MAX.

E. REFER TO CIVIL, LANDSCAPE, PLUMBING & ELECTRICAL FOR UTILITY INFORMATION. CONTRACTOR TO COORDINATE ALL TRADES TO MAINTAIN PROPER CLEARANCES & AVOID CONFLICTS.

IDENTIFICATION STAMP
DIV. OF THE STATE ARCHITECT
APP: 02-122821 INC: 2
REVIEWED FOR
SS ☑ FLS ☑ ACS ☑
DATE: 11/20/2025

Teter, Inc. expressly reserves its common law copyright and other property rights in these plans. This document, the ideas and designs incorporated herein, as an instrument of professional service, is not to be used in whole or in part, for any other project without prior written authorization.

MARK	DATE	DESCRIPTION
A.	11/13/2025	DSA BACKCHECK

TETER, INC.
FRESNO HEADQUARTERS
VISALIA | BAKERSFIELD | MODESTO | SAN LUIS OBISPO
ARCHITECTS ENGINEERS CONNECTED

VISALIA CAMPUS UNIVERSITY CENTER
COLLEGE OF THE SEQUOIAS
915 S. MOONEY BLVD
915 S MOONEY BLVD, VISALIA, CA 93277

DRAWING TITLE
PROPOSED SITE PLAN - SOUTH (INC. 2)

PROJECT NO.
22-12498

DRAWING
A122.2

PLOT DATE: 9/9/2025 10:59:26 AM

\\tet-file1\Users\Gerardo.Juarez_TETR\Documents\12632-A-COS Promenade_gerardo.juarez7Z6UR.rvt

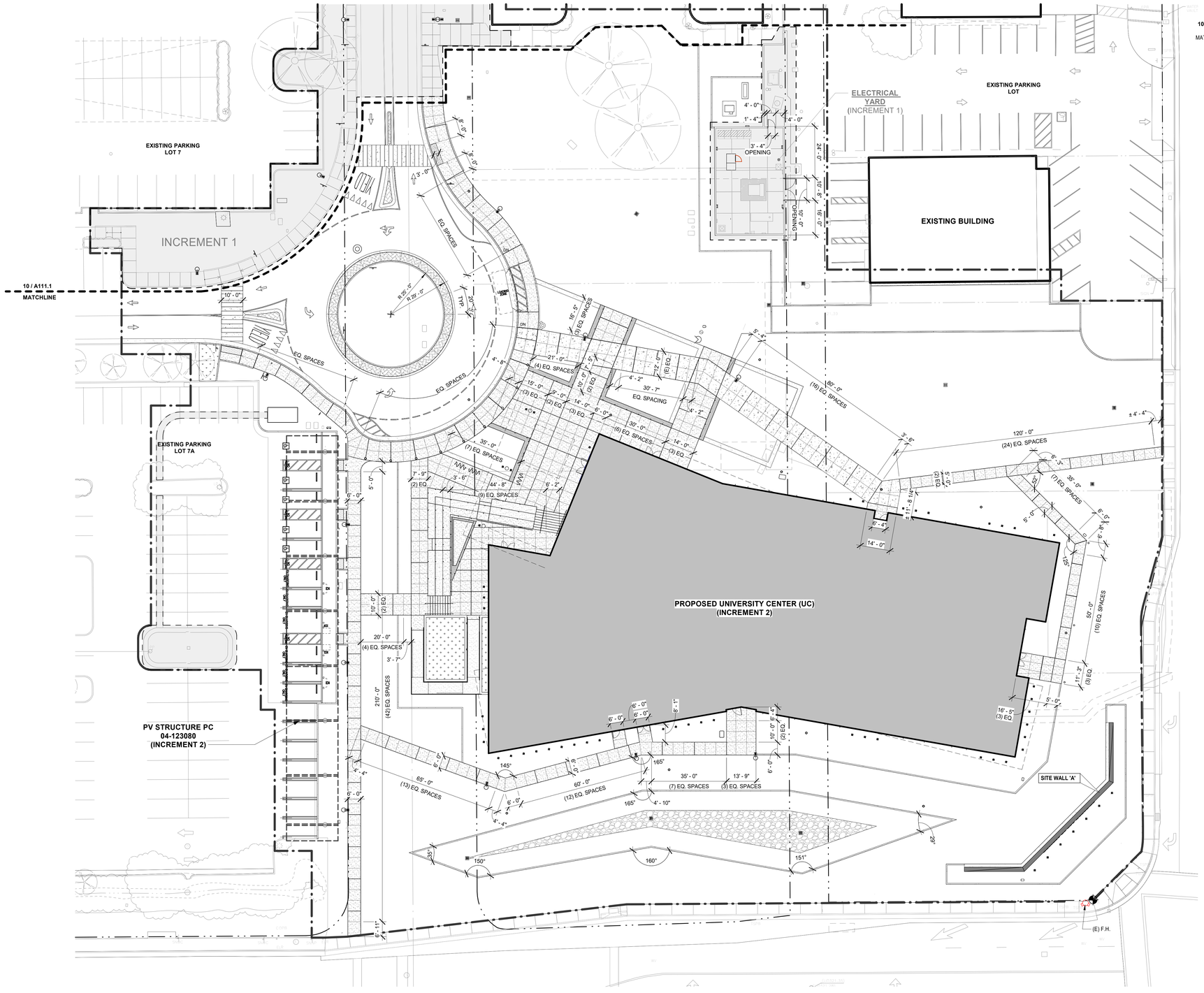

LEGEND

- EXISTING BUILDING TO REMAIN NOT INCLUDED IN SCOPE OF WORK
- NEW UNIVERSITY CENTER BUILDING, (UNDER INCREMENT 2)
- SITE IMPROVEMENTS (INCREMENT 1)
- HEAVY DUTY CONCRETE PAVING, SEE CIVIL **B/X101.2**
- STAMPED CONCRETE HEAVY DUTY CONCRETE PAVING
- EDGE OF CONCRETE
- CONCRETE PAVING, SEE CIVIL **A/X101.2**
- NOTE: IF NOT INDICATED CONTRACTION JOINT AT 5'-0" O.C. MAX. AND ISOLATION JOINT AT 30'-0" O.C. MAX.
- CONCRETE CONTROL JOINT
- CONCRETE EXPANSION JOINT
- POLE MOUNTED LIGHT FIXTURE, SEE ELECTRICAL
- (E) F.H. EXISTING FIRE HYDRANT
- AREA OF WORK IN SCOPE

GENERAL NOTES

A. SEE CIVIL, LANDSCAPE AND STRUCTURAL: SCOPE MAY AFFECT AREAS NOT NOTED IN ARCHITECTURAL DRAWINGS.

B. EXCAVATIONS SHALL BE ADEQUATELY SHORED, BRACED & SHEETED SO THAT THE EARTH WILL NOT SLIDE OR SETTLE & SO THAT ALL EXISTING IMPROVEMENTS OF ANY KIND WILL BE FULLY PROTECTED FROM DAMAGE. WHERE THE EXCAVATION FOR A CONDUIT TRENCH, AND/OR STRUCTURE IS FIVE FEET OR MORE IN DEPTH, THE CONTRACTOR SHALL PROVIDE ADEQUATE SHEETING, WHICH SHALL CONFORM TO THE APPLICABLE CONSTRUCTION SAFETY ORDERS OF THE DIVISION OF INDUSTRIAL SAFETY OF THE STATE OF CALIFORNIA. THE CONTRACTOR SHALL ALWAYS COMPLY WITH OSHA REQUIREMENTS.

C. FINISH GRADE SHALL HAVE A 1.5% SLOPE AWAY FROM THE BLDG. FOR A DISTANCE NOT LESS THAN 5'-0" FROM THE BLDG.

D. EXTERIOR CONC. LANDINGS AT DOORS SHALL NOT BE MORE THAN 1/2 INCH LOWER THAN THE TOP OF THE DOORWAY THRESHOLD WITH 1/4 INCH PER FOOT SLOPE MAX.

E. REFER TO CIVIL, LANDSCAPE, PLUMBING & ELECTRICAL FOR UTILITY INFORMATION. CONTRACTOR TO COORDINATE ALL TRADES TO MAINTAIN PROPER CLEARANCES & AVOID CONFLICTS.

NORTH

ENLARGED SITE CONCRETE JOINTS

1" = 20'-0" | 10

PLOT DATE: 9/9/2025 11:00:13 AM

IDENTIFICATION STAMP
DIV. OF THE STATE ARCHITECT
APP: 02-122821 INC: 2
REVIEWED FOR
SS ☑ FLS ☑ ACS ☑
DATE: 11/20/2025

Teter, Inc. expressly reserves its common law copyright and other property rights in these plans. This document, the ideas and designs incorporated herein, as an instrument of professional service, is not to be used in whole or in part, for any other project without prior written authorization.

MARK	DATE	DESCRIPTION
A.	11/13/2025	DSA BACKCHECK

LICENSED ARCHITECT JONATHAN POWELL TETER No. C-31277 STATE OF CALIFORNIA

TETER, INC.
FRESNO HEADQUARTERS
VISALIA | BAKERSFIELD | MODESTO | SAN LUIS OBISPO
ARCHITECTS ENGINEERS CONNECTED

VISALIA CAMPUS UNIVERSITY CENTER
COLLEGE OF THE SEQUOIAS
915 S. MOONEY BLVD
915 S MOONEY BLVD, VISALIA, CA 93277

DRAWING TITLE
ENLARGED SITE CONCRETE JOINTS - (INC. 2)

PROJECT NO.
22-12498

DRAWING
A123.2

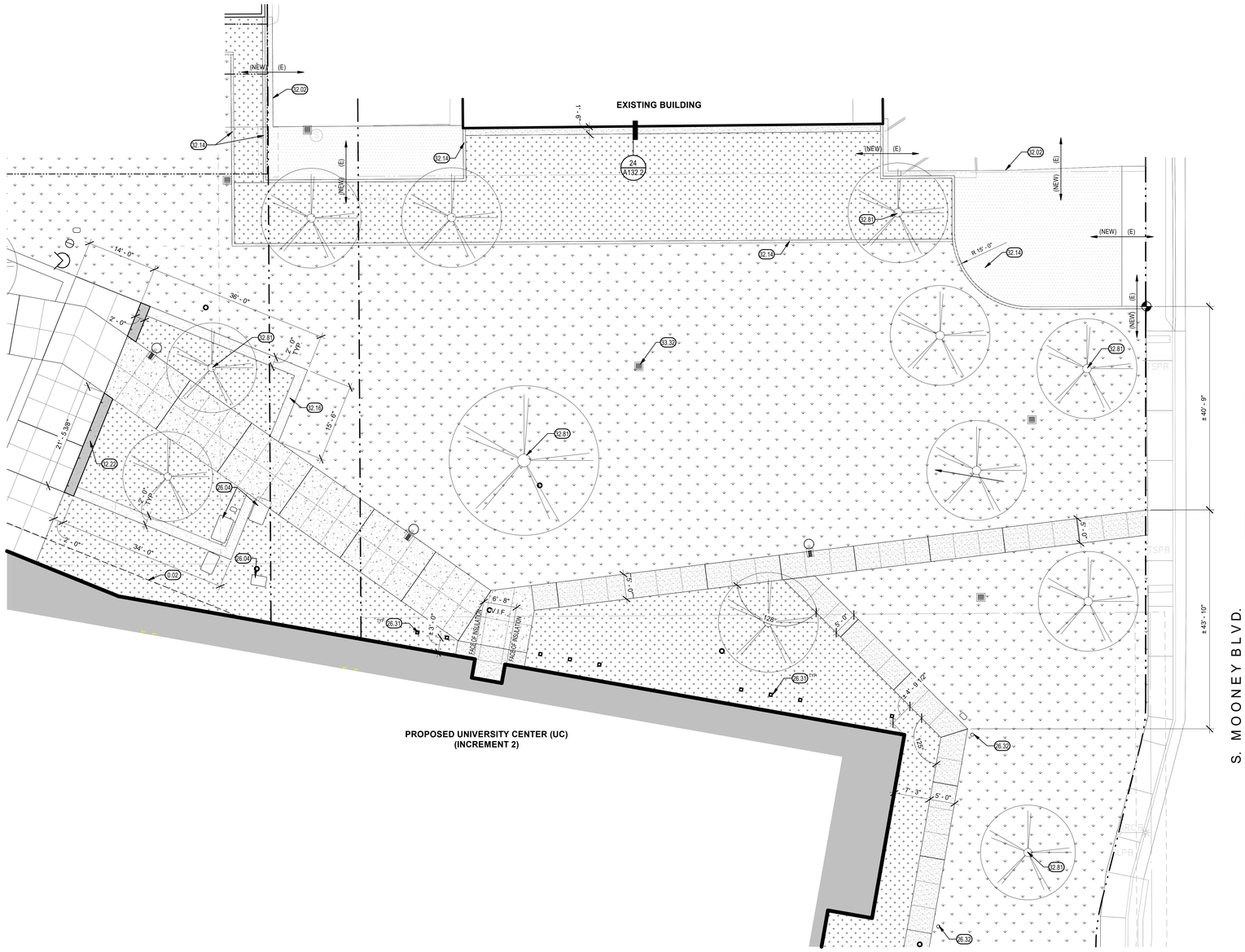

KEYNOTES

0.02	LINE OF ROOF ABOVE, (TYP.)
26.04	PULL BOX, SEE ELECTRICAL
26.31	IN-GROUND LIGHT FIXTURE (TYP.), SEE ELECTRICAL
26.32	BOLLARD LIGHT FIXTURE (TYP.), SEE ELECTRICAL
32.02	PATCH AC PAVING TO MATCH EXISTING, SEE CIVIL
32.14	6" WIDE CONCRETE CURB, TYP.
32.16	24" WIDE CONCRETE CURB, SEE **5 / A132.2**
32.22	CONCRETE SEATING WALL, SEE **4 / A132.2**
32.81	TREE, SEE LANDSCAPE (TYP.)
33.32	STORM DRAIN INLET, SEE CIVIL

LEGEND

- NEW UNIVERSITY CENTER BUILDING, (UNDER INCREMENT 2)
- CONCRETE PAVING, SEE CIVIL **A/X101.2**
- NOTE: IF NOT INDICATED CONTRACTION JOINT AT 5'-0" O.C. MAX. AND ISOLATION JOINT AT 30'-0" O.C. MAX.
- ASPHALT PAVING, SEE CIVIL **C/X101.2**
- PLANTER AREA, SEE LANDSCAPE & CIVIL
- TURF, SEE LANDSCAPE
- COBBLE DRAINAGE AREA, SEE LANDSCAPE
- POLE MOUNTED LIGHT FIXTURE, SEE ELECTRICAL
- SEQUENCE OF CONSTRUCTION (INCREMENT 2) TO START AFTER APRIL 2026, COORDINATE WITH ARCHITECT

GENERAL NOTES

A. SEE CIVIL, LANDSCAPE AND STRUCTURAL: SCOPE MAY AFFECT AREAS NOT NOTED IN ARCHITECTURAL DRAWINGS.

B. EXCAVATIONS SHALL BE ADEQUATELY SHORED, BRACED & SHEETED SO THAT THE EARTH WILL NOT SLIDE OR SETTLE & SO THAT ALL EXISTING IMPROVEMENTS OF ANY KIND WILL BE FULLY PROTECTED FROM DAMAGE. WHERE THE EXCAVATION FOR A CONDUIT TRENCH, AND/OR STRUCTURE IS FIVE FEET OR MORE IN DEPTH, THE CONTRACTOR SHALL PROVIDE ADEQUATE SHEETING, WHICH SHALL CONFORM TO THE APPLICABLE CONSTRUCTION SAFETY ORDERS OF THE DIVISION OF INDUSTRIAL SAFETY OF THE STATE OF CALIFORNIA. THE CONTRACTOR SHALL ALWAYS COMPLY WITH OSHA REQUIREMENTS.

C. FINISH GRADE SHALL HAVE A 1.5% SLOPE AWAY FROM THE BLDG. FOR A DISTANCE NOT LESS THAN 5'-0" FROM THE BLDG.

D. EXTERIOR CONC. LANDINGS AT DOORS SHALL NOT BE MORE THAN 1/2 INCH LOWER THAN THE TOP OF THE DOORWAY THRESHOLD WITH 1/4 INCH PER FOOT SLOPE MAX.

E. REFER TO CIVIL, LANDSCAPE, PLUMBING & ELECTRICAL FOR UTILITY INFORMATION. CONTRACTOR TO COORDINATE ALL TRADES TO MAINTAIN PROPER CLEARANCES & AVOID CONFLICTS.

NORTH

PROPOSED ENLARGED PLAN - SITE WALLS 'B' & 'C'

1" = 10'-0" | 10

IDENTIFICATION STAMP
DIV. OF THE STATE ARCHITECT
APP: 02-122821 INC: 2
REVIEWED FOR
SS ☑ FLS ☑ ACS ☑
DATE: 11/20/2025

Teter, Inc. expressly reserves its common law copyright and other property rights in these plans. This document, the ideas and designs incorporated herein, as an instrument of professional service, is not to be used in whole or part, for any other project without prior written authorization.

MARK	DATE	DESCRIPTION
A.	11/13/2025	DSA BACKCHECK

LICENSED ARCHITECT JOSHUA M. TETER No. C-32121 STATE OF CALIFORNIA

TETER, INC.
FRESNO HEADQUARTERS
VISALIA | BAKERSFIELD | MODESTO | SAN LUIS OBISPO
ARCHITECTS ENGINEERS CONNECTED

TETER

VISALIA CAMPUS UNIVERSITY CENTER
COLLEGE OF THE SEQUOIAS
915 S. MOONEY BLVD
915 S MOONEY BLVD, VISALIA, CA 93277

DRAWING TITLE
ENLARGED PROPOSED SITE PLAN (INC. 2)

PROJECT NO.
22-12498

DRAWING
A124.2

PLOT DATE: 9/9/2025 11:00:31 AM

\\tet-file1\Users\Gerardo.Juarez_TETR\Documents\12632-A-COS Promenade_gerardo.juarez7Z8UR.rvt

\\tet-file1\Users\Gerardo.Juarez_TETR\Documents\12632-A-COS Promenade_gerardo.juarez7Z8UR.rvt

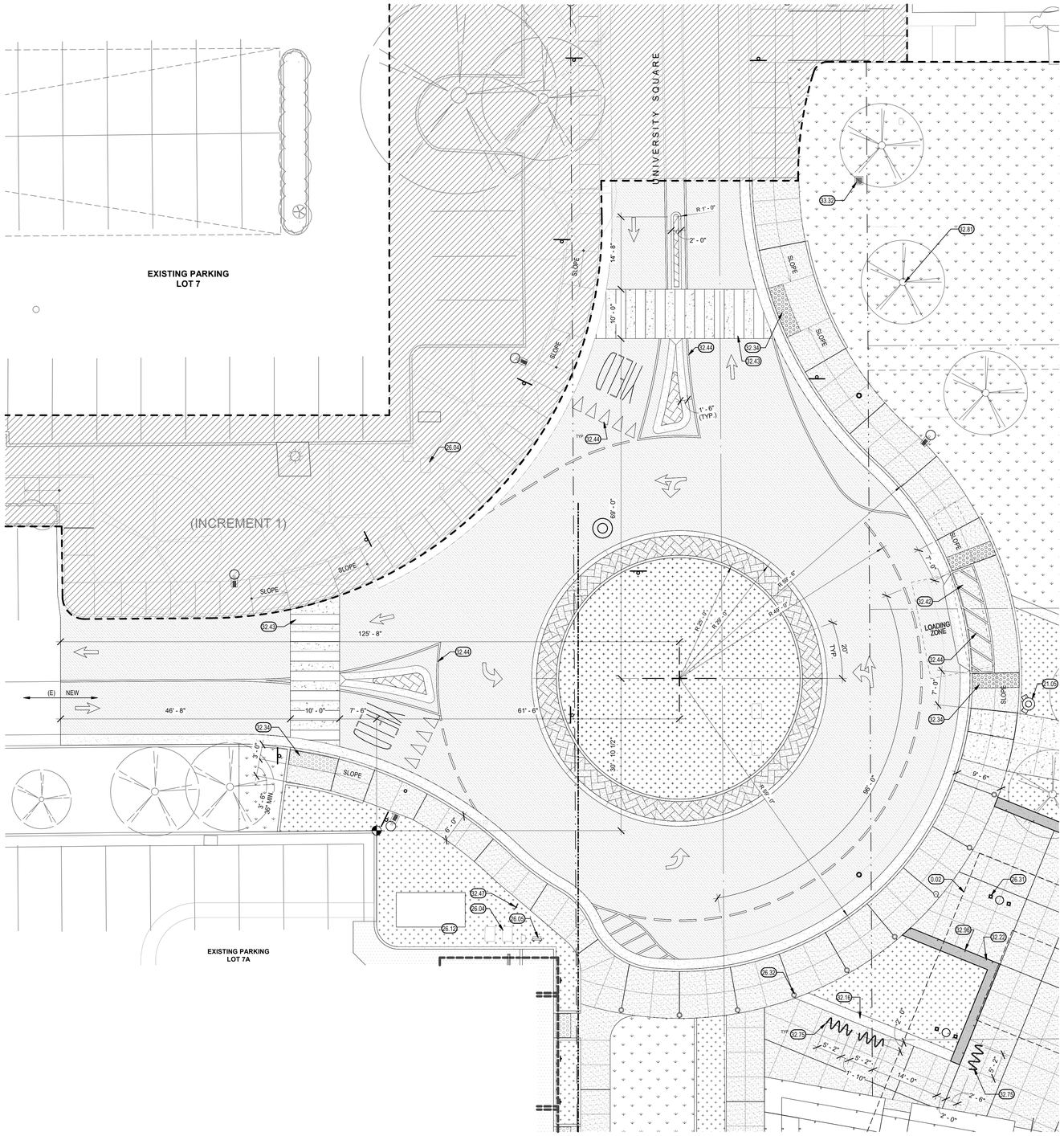

KEYNOTES

0.02	LINE OF ROOF ABOVE, (TYP.)
21.05	NEW FIRE HYDRANT, SEE CIVIL
26.04	PULL BOX, SEE ELECTRICAL
26.05	ELECTRICAL PANEL, SEE ELECTRICAL
26.12	SCE PRIMARY DISTRIBUTION PAD MOUNTED SWITCH, PER (INCREMENT 01)
26.31	IN-GROUND LIGHT FIXTURE (TYP.), SEE ELECTRICAL
26.32	BOLLARD LIGHT FIXTURE (TYP.), SEE ELECTRICAL
32.16	24" WIDE CONCRETE CURB, SEE **5 / A132.2**
32.22	CONCRETE SEATING WALL, SEE **4 / A132.2**
32.34	DETECTABLE WARNING SURFACE, SEE CIVIL **L / X101.2**
32.42	ACCESSIBLE PASSENGER LOADING AISLE, SEE **15 / A132.2**
32.43	CROSSWALK PAVEMENT MARKING, SEE CIVIL **A/X102.2**
32.44	PAVEMENT MARKING STRIPE, SEE CIVIL SHEET **C701.2**
32.47	PASSENGER LOADING ZONE SIGNAGE, SEE CIVIL SHEET **C701.2**
32.75	BICYCLE RACK (TYP.), SEE **10 / A132.2**
32.81	TREE, SEE LANDSCAPE (TYP.)
32.96	STAINLESS STEEL SKATEBOARD DETERRENTS AT 8'-0" MAX. SPACING (TYP).
33.32	STORM DRAIN INLET, SEE CIVIL

LEGEND

- SITE IMPROVEMENTS (UNDER INCREMENT 1)
- CONCRETE PAVING, SEE CIVIL **A/X101.2**
  NOTE: IF NOT INDICATED CONTRACTION JOINT AT 5'-0" O.C. MAX. AND ISOLATION JOINT AT 30'-0" O.C. MAX.
- HEAVY DUTY CONCRETE PAVING, SEE CIVIL **B/X101.2**
- STAMPED CONCRETE HEAVY DUTY CONCRETE PAVING
- HEAVY DUTY ASPHALT PAVING, SEE CIVIL **C/X101.2**
- PLANTER AREA, SEE LANDSCAPE & CIVIL
- COBBLE DRAINAGE AREA, SEE LANDSCAPE
- TURF, SEE LANDSCAPE
- POLE MOUNTED LIGHT FIXTURE, SEE ELECTRICAL
- (E) F.H. EXISTING FIRE HYDRANT

GENERAL NOTES

A. SEE CIVIL, LANDSCAPE AND STRUCTURAL: SCOPE MAY AFFECT AREAS NOT NOTED IN ARCHITECTURAL DRAWINGS.

B. EXCAVATIONS SHALL BE ADEQUATELY SHORED, BRACED & SHEETED SO THAT THE EARTH WILL NOT SLIDE OR SETTLE & SO THAT ALL EXISTING IMPROVEMENTS OF ANY KIND WILL BE FULLY PROTECTED FROM DAMAGE. WHERE THE EXCAVATION FOR A CONDUIT TRENCH, AND/OR STRUCTURE IS FIVE FEET OR MORE IN DEPTH, THE CONTRACTOR SHALL PROVIDE ADEQUATE SHEETING, WHICH SHALL CONFORM TO THE APPLICABLE CONSTRUCTION SAFETY ORDERS OF THE DIVISION OF INDUSTRIAL SAFETY OF THE STATE OF CALIFORNIA. THE CONTRACTOR SHALL ALWAYS COMPLY WITH OSHA REQUIREMENTS.

C. FINISH GRADE SHALL HAVE A 1.5% SLOPE AWAY FROM THE BLDG. FOR A DISTANCE NOT LESS THAN 5'-0" FROM THE BLDG.

D. EXTERIOR CONC. LANDINGS AT DOORS SHALL NOT BE MORE THAN 1/2 INCH LOWER THAN THE TOP OF THE DOORWAY THRESHOLD WITH 1/4 INCH PER FOOT SLOPE MAX.

E. REFER TO CIVIL, LANDSCAPE, PLUMBING & ELECTRICAL FOR UTILITY INFORMATION. CONTRACTOR TO COORDINATE ALL TRADES TO MAINTAIN PROPER CLEARANCES & AVOID CONFLICTS.

IDENTIFICATION STAMP
DIV. OF THE STATE ARCHITECT
APP: 02-122821 INC: 2
REVIEWED FOR
SS ☑ FLS ☑ ACS ☑
DATE: 11/20/2025

Teter, Inc. expressly reserves its common law copyright and other property rights in these plans. This document, the ideas and designs incorporated herein, as an instrument of professional service, is not to be used in whole or in part, for any other project without prior written authorization.

MARK	DATE	DESCRIPTION
A.	11/13/2025	DSA BACKCHECK

TETER, INC.
FRESNO HEADQUARTERS
VISALIA | BAKERSFIELD | MODESTO | SAN LUIS OBISPO
ARCHITECTS ENGINEERS CONNECTED

VISALIA CAMPUS UNIVERSITY CENTER
COLLEGE OF THE SEQUOIAS
915 S. MOONEY BLVD
915 S MOONEY BLVD, VISALIA, CA 93277

DRAWING TITLE
PROPOSED SITE PLAN - SOUTH ROUNDABOUT (INC. 2)

PROJECT NO.
22-12498

DRAWING
A125.2

PLOT DATE: 9/9/2025 11:00:49 AM

ENLARGED SITE PLAN - SOUTH ROUNDABOUT

1" = 10'-0"

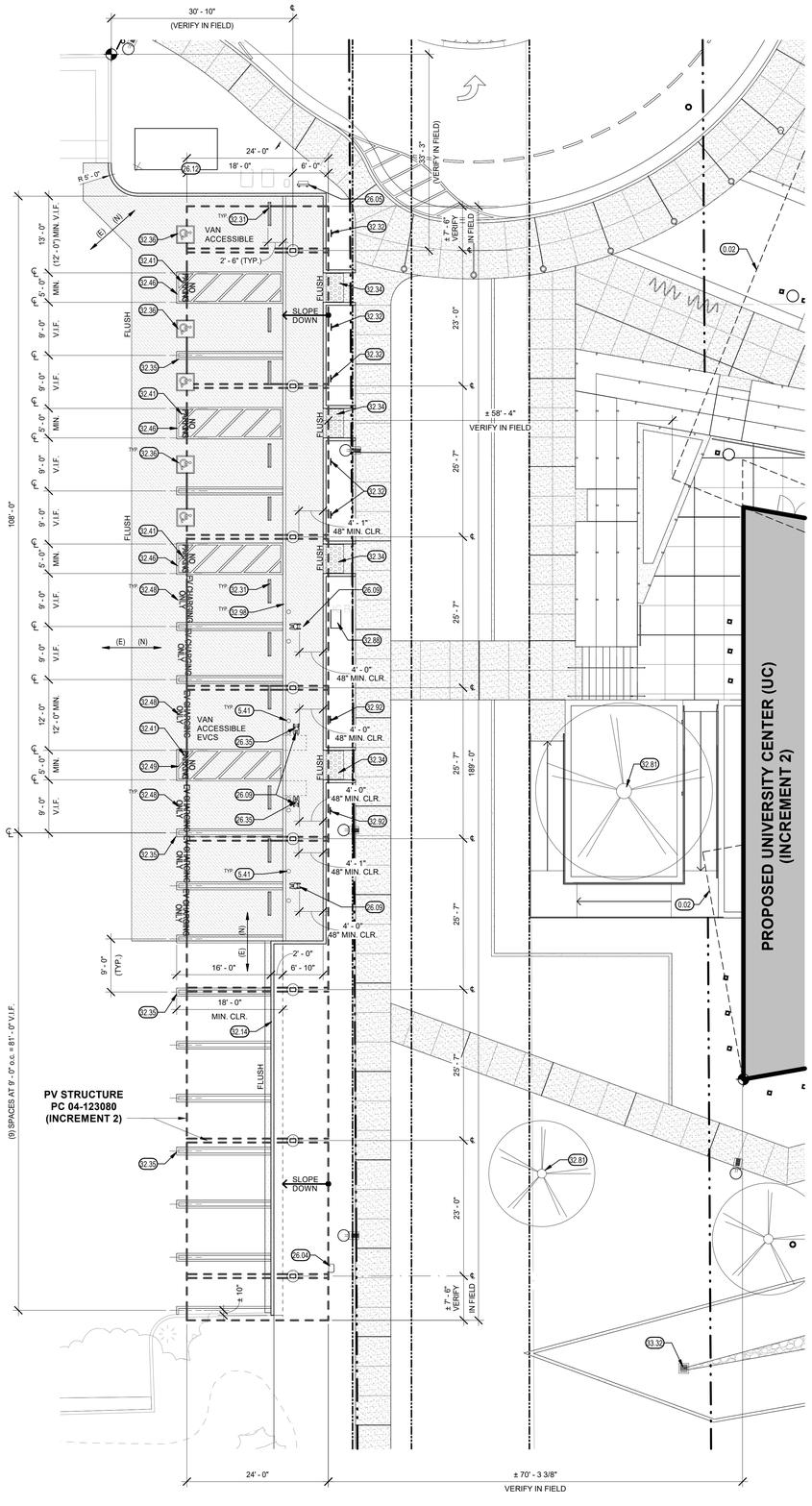

KEYNOTES

0.02	LINE OF ROOF ABOVE, (TYP.)
5.41	STEEL PIPE BOLLARD WITH CONCRETE FILL, SEE **6 / A132.2**
26.04	PULL BOX, SEE ELECTRICAL
26.05	ELECTRICAL PANEL, SEE ELECTRICAL
26.09	ELECTRIC VEHICLE SUPPLY EQUIPMENT (EVSE), SEE ELECTRICAL
26.12	SCE PRIMARY DISTRIBUTION PAD MOUNTED SWITCH, PER (INCREMENT 01)
26.35	ACCESSIBLE EV EQUIPMENT OPERABLE PARTS, SHALL FACE THE CLEAR FLOOR SPACE. SITE CONTRACTOR TO VERIFY PRIOR TO INSTALLATION.
32.14	6" WIDE CONCRETE CURB, TYP.
32.31	CONCRETE WHEEL STOP, SEE **1 / A132.2**
32.32	ACCESSIBLE PARKING STALL SIGNAGE, SEE **11 / A132.2**
32.34	DETECTABLE WARNING SURFACE, SEE CIVIL **L/X101.2**
32.35	PAVEMENT MARKING, 4" WIDE WHITE STRIPE AT PARKING STALL
32.36	ACCESSIBLE PARKING STALL MARKING, SEE **12 / A132.2**
32.41	1'-0" HIGH PAINTED SURFACE MARKING TEXT "NO PARKING" (WHITE), TYP.
32.46	4" WIDE PAINTED BORDER AND STRIPES AT 45 DEGREE ANGLE TO PARKING STALL AT 3'-0" O.C. MAX. (BLUE BORDER AND WHITE STRIPES), TYP.
32.48	12" HIGH MIN. SURFACE MARKING TEXT "EV CHARGING ONLY" (WHITE). TYP.
32.49	ACCESS AISLE STRIPING WITH DIAGONAL LINES SPACED 36"O.C. MAX., COLOR SHALL CONTRAST WITH PAVING, AND NOT BE THE COLOR BLUE USED FOR MARKING ACCESSIBLE PARKING STALL ACCESS AISLE. " NO PARKING" SHALL BE PROVIDED IN MIN. 12" HIGH LETTERS.
32.81	TREE, SEE LANDSCAPE (TYP.)
32.88	IRRIGATION CONTROLLER, SEE LANDSCAPE
32.92	ELECTRIC VEHICLE ACCESSIBLE PARKING STALL(S) SIGN, SEE **21 / A132.2**
32.98	PAVEMENT MARKING, 6" WIDE WHITE STRIPE
33.32	STORM DRAIN INLET, SEE CIVIL

LEGEND

- CONCRETE PAVING, SEE CIVIL **A/X101.2**
  - NOTE: IF NOT INDICATED CONTRACTION JOINT AT 5'-0" O.C. MAX. AND ISOLATION JOINT AT 30'-0" O.C. MAX.
- HEAVY DUTY ASPHALT PAVING, SEE CIVIL **C/X101.2**
- PLANTER AREA, SEE LANDSCAPE & CIVIL
- TURF, SEE LANDSCAPE
- POLE MOUNTED LIGHT FIXTURE, SEE ELECTRICAL
- UTILITY EASEMENT, SEE CIVIL, ELECTRICAL, AND PLUMBING UNDER (INCREMENT 1)

GENERAL NOTES

A. SEE CIVIL, LANDSCAPE AND STRUCTURAL: SCOPE MAY AFFECT AREAS NOT NOTED IN ARCHITECTURAL DRAWINGS.

B. EXCAVATIONS SHALL BE ADEQUATELY SHORED, BRACED & SHEETED SO THAT THE EARTH WILL NOT SLIDE OR SETTLE & SO THAT ALL EXISTING IMPROVEMENTS OF ANY KIND WILL BE FULLY PROTECTED FROM DAMAGE. WHERE THE EXCAVATION FOR A CONDUIT TRENCH, AND/OR STRUCTURE IS FIVE FEET OR MORE IN DEPTH, THE CONTRACTOR SHALL PROVIDE ADEQUATE SHEETING, WHICH SHALL CONFORM TO THE APPLICABLE CONSTRUCTION SAFETY ORDERS OF THE DIVISION OF INDUSTRIAL SAFETY OF THE STATE OF CALIFORNIA. THE CONTRACTOR SHALL ALWAYS COMPLY WITH OSHA REQUIREMENTS.

C. FINISH GRADE SHALL HAVE A 1.5% SLOPE AWAY FROM THE BLDG. FOR A DISTANCE NOT LESS THAN 5'-0" FROM THE BLDG.

D. EXTERIOR CONC. LANDINGS AT DOORS SHALL NOT BE MORE THAN 1/2 INCH LOWER THAN THE TOP OF THE DOORWAY THRESHOLD WITH 1/4 INCH PER FOOT SLOPE MAX.

E. REFER TO CIVIL, LANDSCAPE, PLUMBING & ELECTRICAL FOR UTILITY INFORMATION. CONTRACTOR TO COORDINATE ALL TRADES TO MAINTAIN PROPER CLEARANCES & AVOID CONFLICTS.

IDENTIFICATION STAMP
DIV. OF THE STATE ARCHITECT
APP: 02-122821 INC: 2
REVIEWED FOR
SS ☑ FLS ☑ ACS ☑
DATE: 11/20/2025

Teter, Inc. expressly reserves its common law copyright and other property rights in these plans. This document, the ideas and designs incorporated herein, as an instrument of professional service, is not to be used in whole or in part, for any other project without prior written authorization.

MARK	DATE	DESCRIPTION
A.	11/13/2025	DSA BACKCHECK



TETER, INC.
ARCHITECTS ENGINEERS CONNECTED
FRESNO HEADQUARTERS
VISALIA | BAKERSFIELD | MODESTO | SAN LUIS OBISPO

VISALIA CAMPUS UNIVERSITY CENTER
COLLEGE OF THE SEQUOIAS
915 S. MOONEY BLVD
915 S MOONEY BLVD, VISALIA, CA 93277

DRAWING TITLE
ENLARGED SITE PLAN - PARKING LAYOUT (INC. 2)

PROJECT NO.
22-12498

DRAWING
A126.2

PLOT DATE: 10/1/2025 10:47:56 AM

\\tet-file1\Users\Gerardo.Juarez_TETR\Documents\12632-A-COS Promenade_gerardo.juarez7Z6UR.rvt

ENLARGED SITE PLAN - PARKING LAYOUT

1" = 10'-0"

\\tet-file1\Users\tara.chong_TETR\Documents\12498-A-UC_tara.chong.rvt

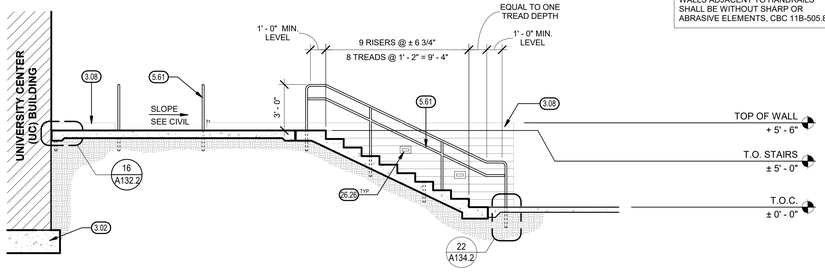

EXTERIOR STAIR SECTION 1

1/4" = 1'-0" | 16

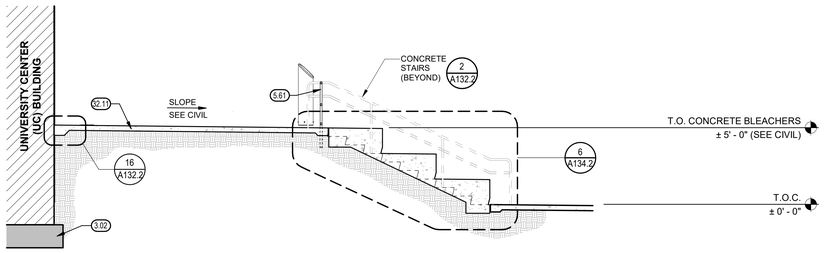

EXTERIOR STAIR SECTION 2

1/4" = 1'-0" | 17

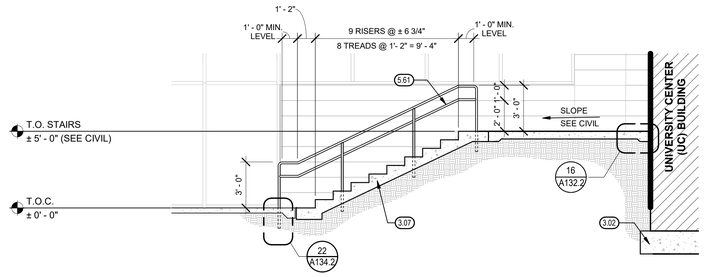

EXTERIOR STAIR SECTION 3

1/4" = 1'-0" | 18

ASSEMBLY SEATING AREA
PER TABLE 11B-221.2.1.1

TOTAL OCCUPANT COUNT: 131

- 119 SEATS PROVIDED
  - -2 DESIGNATED AISLE SEATS (5% AISLE SEATS, 0.05 x 3 = 0.15)
  - -2 SEMI-AMBULATN SEATS (1% NOT LESS THEN 2, 0.01 x 119 = 1.19)
  - -4 WHEELCHAIR SPACES REQUIRED
  - -4 COMPANION SEATS REQUIRED

CS =COMPANION SEAT
AS = DESIGNATED AISLE SEAT
SA = SEMI-AMBULANT SEAT

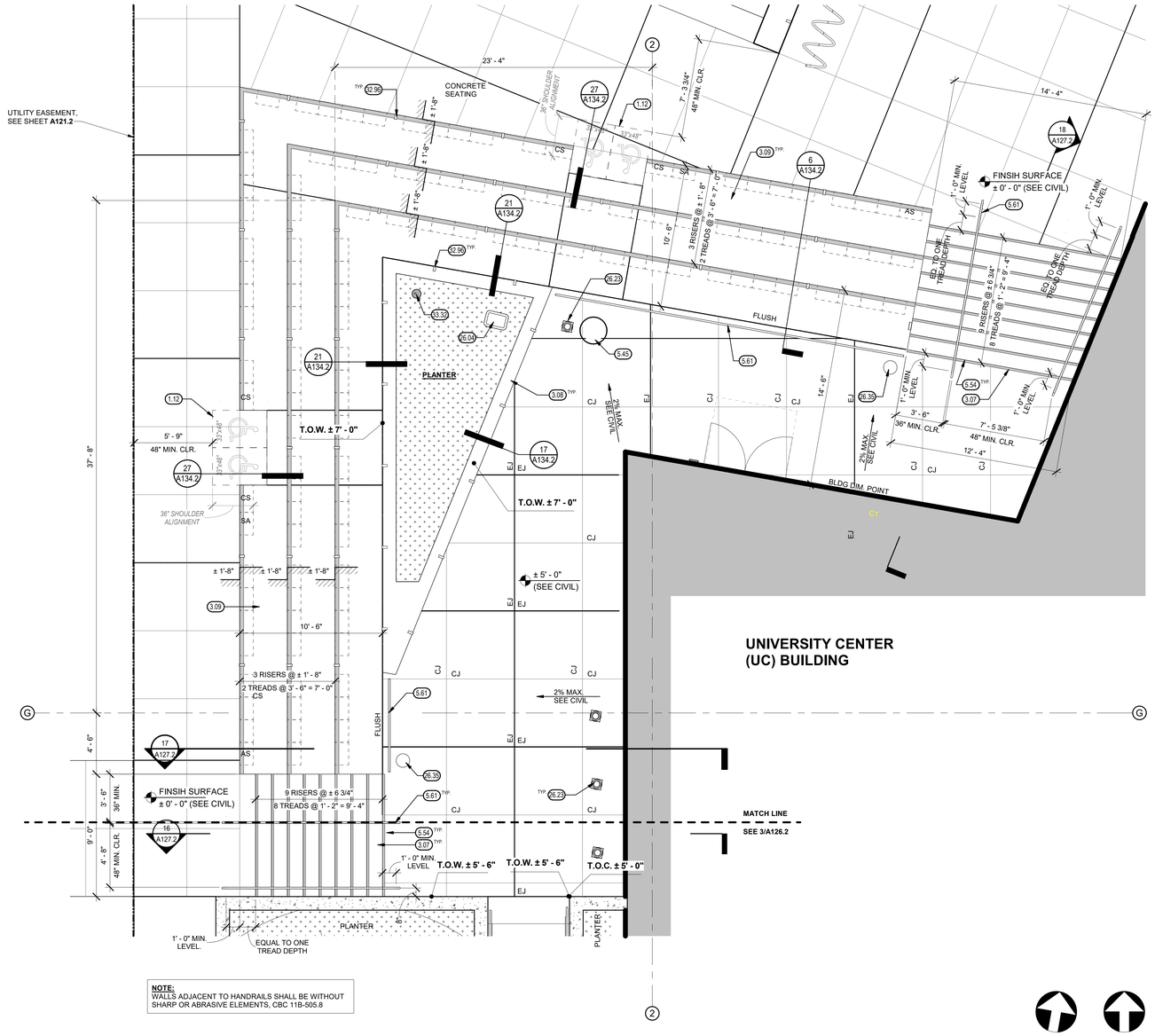

NOTE:
WALLS ADJACENT TO HANDRAILS SHALL BE WITHOUT SHARP OR ABRASIVE ELEMENTS, CBC 11B-505.8

PROJECT NORTH NORTH

ENLARGED SITE PLAN - EXTERIOR STAIRS

1/4" = 1'-0" | 4

KEYNOTES (x0.00)

1.12	MIN. 33" x 48" SIDE BY SIDE WHEELCHAIR SPACES
3.02	CONCRETE FOOTING, SEE STRUCTURAL
3.07	CONCRETE STAIRS, SEE **7 / A134.2**
3.08	BOARD FORMED CONCRETE PLANTER, SEE **17 / A134.2**
3.09	CONCRETE SEATING, SEE **6 / A134.2**
5.45	COLUMN ENCLOSURE, SEE **5 / A826.2**
5.54	NON-SLIP METAL STAIR NOSING WITH CONTRASTING COLOR STRIPE AT EACH STEP, SEE **3 / A132.2**
5.61	HANDRAIL, TYP. SEE **22 / A134.2**
26.04	PULL BOX, SEE ELECTRICAL
26.23	RECESSED FLOOR LIGHT, SEE ELECTRICAL
26.26	RECESSED LIGHT FIXTURE, SEE ELECTRICAL
26.35	WAP BOLLARD, SEE ELECTRICAL
32.11	CONCRETE PAVING/WALK, SEE CIVIL
32.96	STAINLESS STEEL SKATEBOARD DETERRENTS AT 8'-0" MAX. SPACING (TYP).
33.32	STORM DRAIN INLET, SEE CIVIL

GENERAL NOTES

A. SEE CIVIL, LANDSCAPE AND STRUCTURAL: SCOPE MAY AFFECT AREAS NOT NOTED IN ARCHITECTURAL DRAWINGS.

B. EXCAVATIONS SHALL BE ADEQUATELY SHORED, BRACED & SHEETED SO THAT THE EARTH WILL NOT SLIDE OR SETTLE & SO THAT ALL EXISTING IMPROVEMENTS OF ANY KIND WILL BE FULLY PROTECTED FROM DAMAGE. WHERE THE EXCAVATION FOR A CONDUIT TRENCH, AND/OR STRUCTURE IS FIVE FEET OR MORE IN DEPTH, THE CONTRACTOR SHALL PROVIDE ADEQUATE SHEETING, WHICH SHALL CONFORM TO THE APPLICABLE CONSTRUCTION SAFETY ORDERS OF THE DIVISION OF INDUSTRIAL SAFETY OF THE STATE OF CALIFORNIA. THE CONTRACTOR SHALL ALWAYS COMPLY WITH OSHA REQUIREMENTS.

C. FINISH GRADE SHALL HAVE A 1.5% SLOPE AWAY FROM THE BLDG. FOR A DISTANCE NOT LESS THAN 5'-0" FROM THE BLDG.

D. EXTERIOR CONC. LANDINGS AT DOORS SHALL NOT BE MORE THAN 1/2 INCH LOWER THAN THE TOP OF THE DOORWAY THRESHOLD WITH 1/4 INCH PER FOOT SLOPE MAX.

E. REFER TO CIVIL, LANDSCAPE, PLUMBING & ELECTRICAL FOR UTILITY INFORMATION. CONTRACTOR TO COORDINATE ALL TRADES TO MAINTAIN PROPER CLEARANCES & AVOID CONFLICTS.

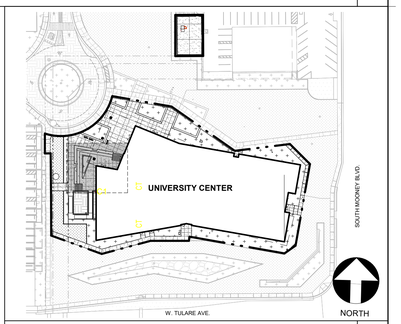

KEY PLAN

N.T.S. | 5

IDENTIFICATION STAMP
DIV. OF THE STATE ARCHITECT
APP: 02-122821 INC: 2
REVIEWED FOR
SS ☑ FLS ☑ ACS ☑
DATE: 11/20/2025

Teter, Inc. expressly reserves its common law copyright and other property rights in these plans. This document, the ideas and designs incorporated herein, as an instrument of professional service, is not to be used in whole or in part, for any other project without prior written authorization.

MARK	DATE	DESCRIPTION
A.	11/13/2025	DSA BACKCHECK

TETER, INC.
FRESNO HEADQUARTERS
VISALIA | BAKERSFIELD | MODESTO | SAN LUIS OBISPO
ARCHITECTS ENGINEERS CONNECTED

VISALIA CAMPUS UNIVERSITY CENTER
COLLEGE OF THE SEQUOIAS - INCREMENT 2
915 S. MOONEY BLVD
VISALIA, CALIFORNIA

DRAWING TITLE
ENLARGED SITE - EXTERIOR STAIRS (INCREMENT 2)

PROJECT NO.
22-12498

DRAWING
A127.2

PLOT DATE: 11/10/2025 8:45:38 AM

\\tet-file1\Users\Gerardo.Juarez_TETR\Documents\122498-A-UC_gerardo.juarez7Z6URr.rvt

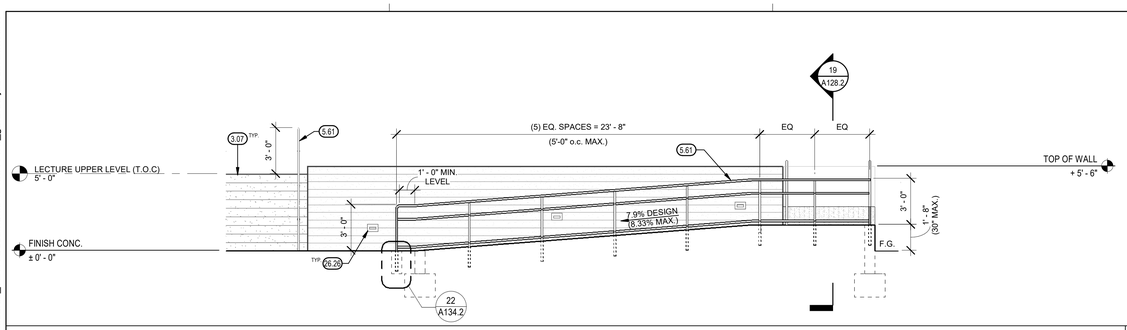

RAMP ELEVATION

1/4" = 1'-0" | 16

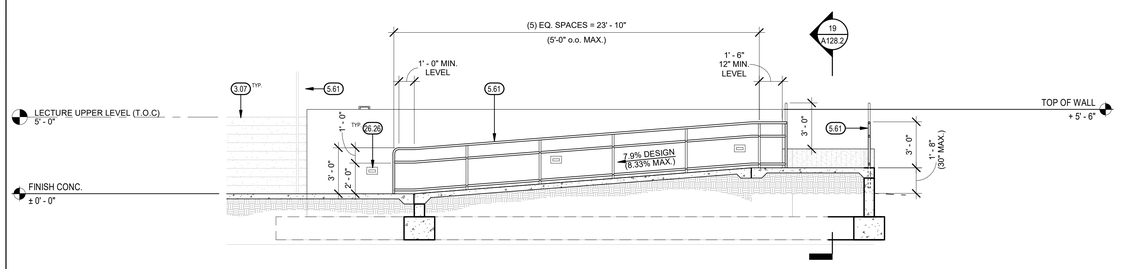

RAMP SECTION

1/4" = 1'-0" | 17

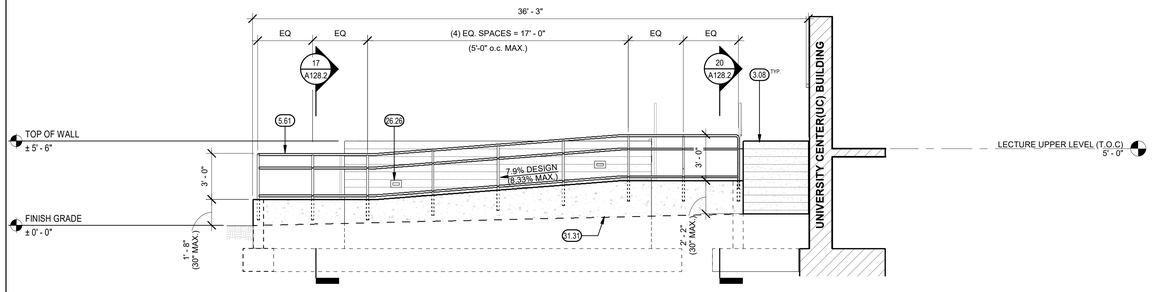

RAMP ELEVATION

1/4" = 1'-0" | 18

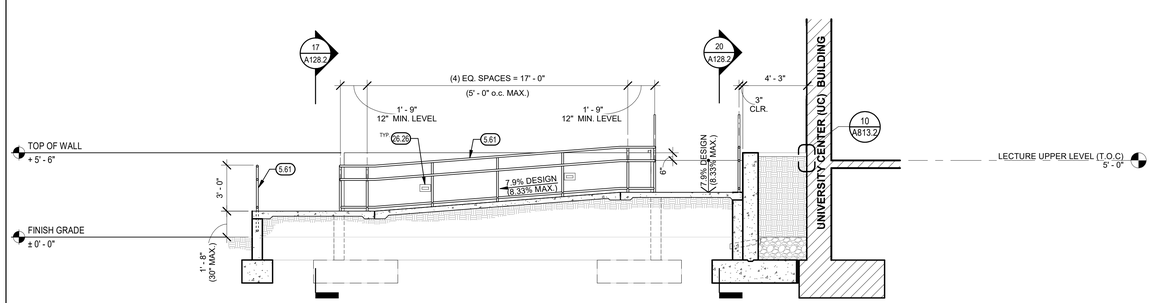

RAMP SECTION

1/4" = 1'-0" | 19

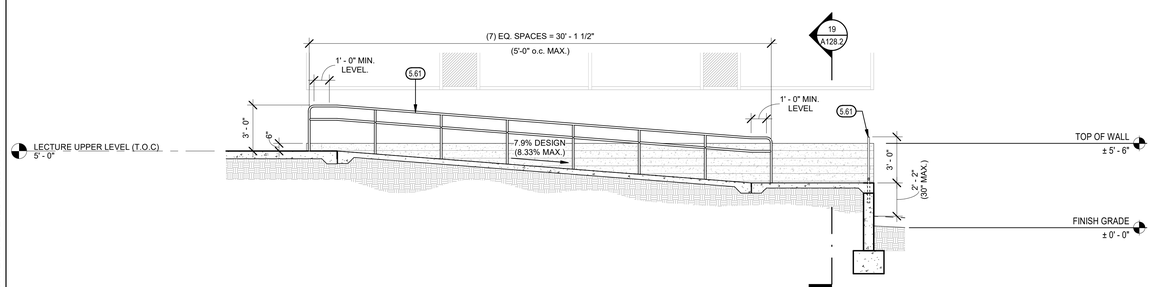

RAMP SECTION

1/4" = 1'-0" | 20

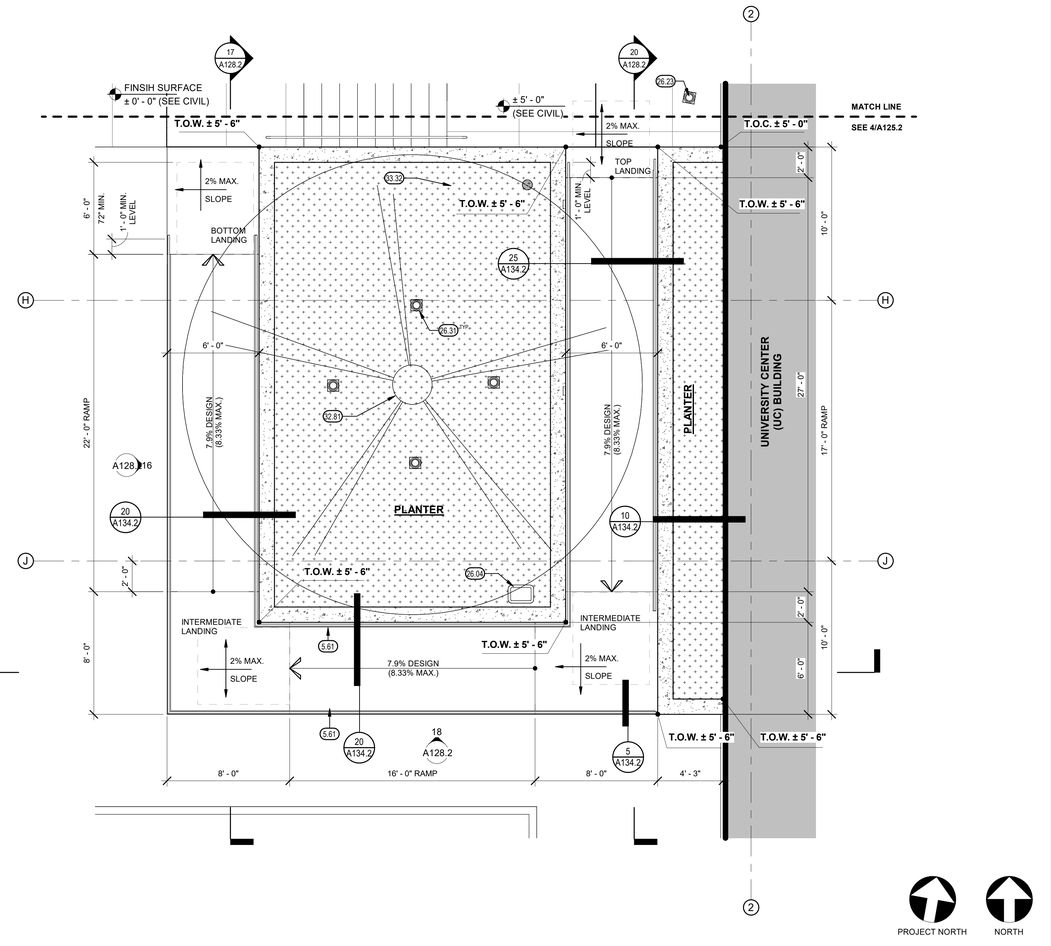

ENLARGED SITE PLAN - RAMP

1/4" = 1'-0" | 3

KEYNOTES (30.0)

3.07	CONCRETE STAIRS, SEE **7 / A134.2**
3.08	BOARD FORMED CONCRETE PLANTER, SEE **17 / A134.2**
5.61	HANDRAIL, TYP. SEE **22 / A134.2**
26.04	PULL BOX, SEE ELECTRICAL
26.23	RECESSED FLOOR LIGHT, SEE ELECTRICAL
26.26	RECESSED LIGHT FIXTURE, SEE ELECTRICAL
26.31	IN-GROUND LIGHT FIXTURE (TYP.), SEE ELECTRICAL
31.31	LINE OF FINISH GRADE, SEE CIVIL
32.81	TREE, SEE LANDSCAPE
33.32	STORM DRAIN INLET, SEE CIVIL

GENERAL NOTES

A. SEE CIVIL, LANDSCAPE AND STRUCTURAL; SCOPE MAY AFFECT AREAS NOT NOTED IN ARCHITECTURAL DRAWINGS.

B. EXCAVATIONS SHALL BE ADEQUATELY SHORED, BRACED & SHEETED SO THAT THE EARTH WILL NOT SLIDE OR SETTLE & SO THAT ALL EXISTING IMPROVEMENTS OF ANY KIND WILL BE FULLY PROTECTED FROM DAMAGE. WHERE THE EXCAVATION FOR A CONDUIT TRENCH, AND/OR STRUCTURE IS FIVE FEET OR MORE IN DEPTH, THE CONTRACTOR SHALL PROVIDE ADEQUATE SHEETING, WHICH SHALL CONFORM TO THE APPLICABLE CONSTRUCTION SAFETY ORDERS OF THE DIVISION OF INDUSTRIAL SAFETY OF THE STATE OF CALIFORNIA. THE CONTRACTOR SHALL ALWAYS COMPLY WITH OSHA REQUIREMENTS.

C. FINISH GRADE SHALL HAVE A 1.5% SLOPE AWAY FROM THE BLDG. FOR A DISTANCE NOT LESS THAN 5'-0" FROM THE BLDG.

D. EXTERIOR CONC. LANDINGS AT DOORS SHALL NOT BE MORE THAN 1/2 INCH LOWER THAN THE TOP OF THE DOORWAY THRESHOLD WITH 1/4 INCH PER FOOT SLOPE MAX.

E. REFER TO CIVIL, LANDSCAPE, PLUMBING & ELECTRICAL FOR UTILITY INFORMATION. CONTRACTOR TO COORDINATE ALL TRADES TO MAINTAIN PROPER CLEARANCES & AVOID CONFLICTS.

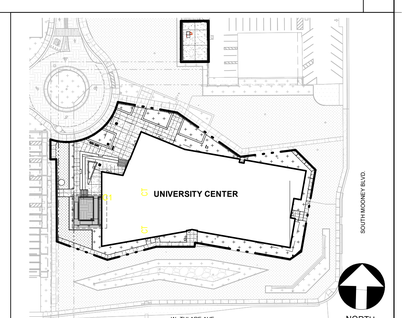

KEY PLAN

N.T.S. | 5

IDENTIFICATION STAMP
DIV. OF THE STATE ARCHITECT
APP: 02-122821 INC: 2
REVIEWED FOR
SS ☑ FLS ☑ ACS ☑
DATE: 11/20/2025

Teter, Inc. expressly reserves its common law copyright and other property rights in these plans. This document, the ideas and designs incorporated herein, as an instrument of professional service, is not to be used in whole or in part, for any other project without prior written authorization.

MARK	DATE	DESCRIPTION
A.	11/13/2025	DSA BACKCHECK

REGISTERED ARCHITECT ★ GERARDO JUAREZ ★ No. C-32... ★ STATE OF CALIFORNIA

TETER, INC.
FRESNO HEADQUARTERS
VISALIA | BAKERSFIELD | MODESTO | SAN LUIS OBISPO
ARCHITECTS ENGINEERS CONNECTED

VISALIA CAMPUS UNIVERSITY CENTER
COLLEGE OF THE SEQUOIAS - INCREMENT 2
915 S. MOONEY BLVD
VISALIA, CALIFORNIA

DRAWING TITLE
ENLARGED SITE PLAN - RAMP (INCREMENT 2)

PROJECT NO.
22-12498

DRAWING
A128.2

PLOT DATE: 10/27/2025 4:03:31 PM

\\tet-file1\Users\Gerardo.Juarez_TETR\Documents\12632-A-COS Promenade_gerardo.juarez7Z6UR.rvt

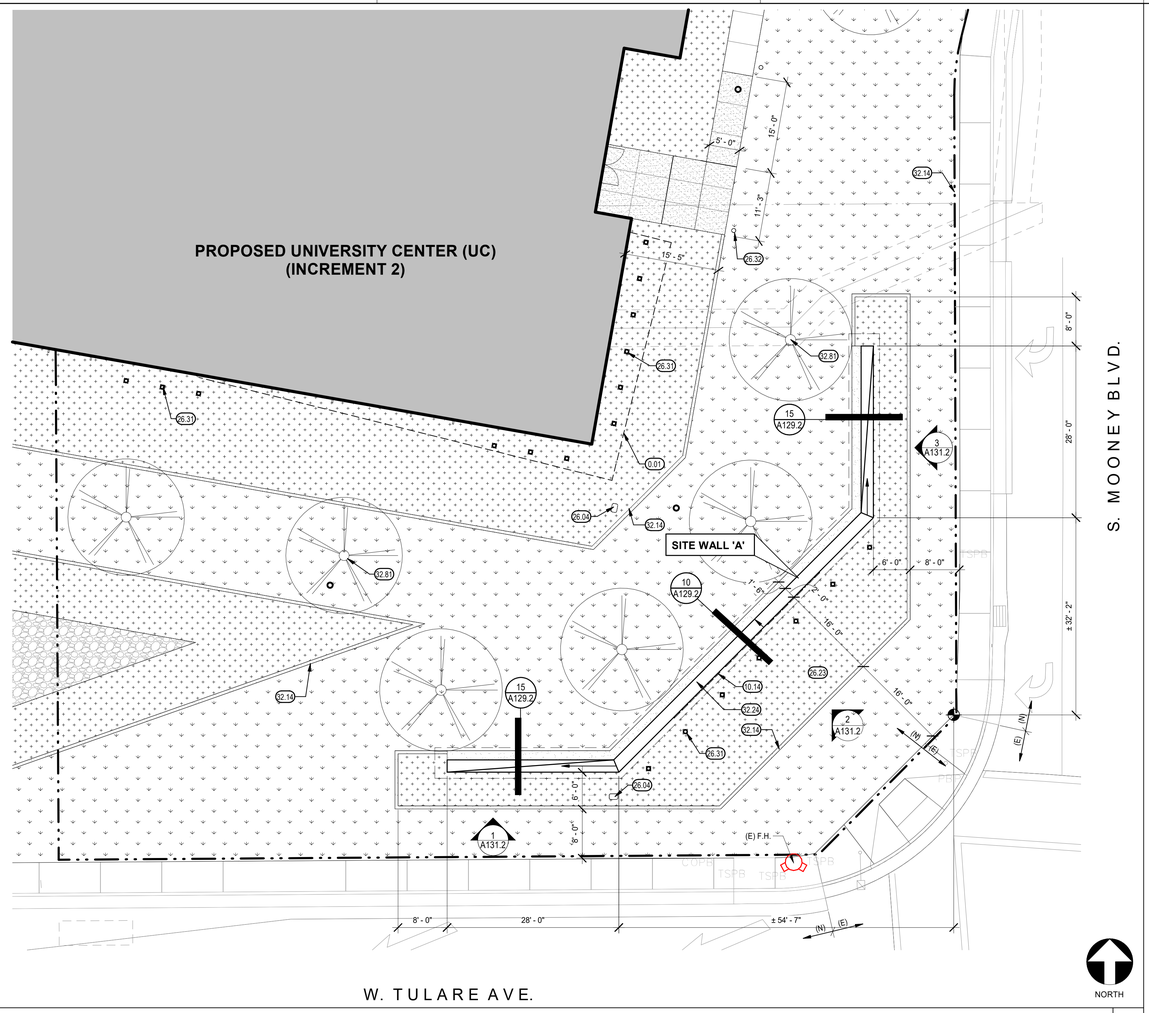

ENLARGED SITE PLAN - SITE WALL 'A'

1" = 10'-0" | 8

KEYNOTES

0.01	LINE OF FLOOR ABOVE
10.14	WALL MOUNTED ALUMINUM DIMENSIONAL LETTER CHARACTER SIGNAGE, SEE WALL ELEVATION & **24 / A129.2**
26.04	PULL BOX, SEE ELECTRICAL
26.23	LIGHT FIXTURE, SEE ELECTRICAL
26.31	IN-GROUND LIGHT FIXTURE (TYP.), SEE ELECTRICAL
26.32	BOLLARD LIGHT FIXTURE (TYP.), SEE ELECTRICAL
32.14	6" WIDE CONCRETE CURB, TYP.
32.24	24" WIDE CAST-IN-PLACE BOARD FORMED (AT EXTERIOR FACE) CONCRETE WALL, TYP.
32.81	TREE, SEE LANDSCAPE (TYP.)

LEGEND

- NEW UNIVERSITY CENTER BUILDING, (UNDER INCREMENT 2)
- CONCRETE PAVING, SEE CIVIL **A/X101.2**
  NOTE: IF NOT INDICATED CONTRACTION JOINT AT 5'-0" O.C. MAX. AND ISOLATION JOINT AT 30'-0" O.C. MAX.
- HEAVY DUTY ASPHALT PAVING, SEE CIVIL **C/X101.2**
- PLANTER AREA, SEE LANDSCAPE & CIVIL
- COBBLE DRAINAGE AREA, SEE LANDSCAPE
- TURF, SEE LANDSCAPE
- POLE MOUNTED LIGHT FIXTURE, SEE ELECTRICAL
- (E) F.H. EXISTING FIRE HYDRANT

GENERAL NOTES

A. SEE CIVIL, LANDSCAPE AND STRUCTURAL: SCOPE MAY AFFECT AREAS NOT NOTED IN ARCHITECTURAL DRAWINGS.

B. EXCAVATIONS SHALL BE ADEQUATELY SHORED, BRACED & SHEETED SO THAT THE EARTH WILL NOT SLIDE OR SETTLE & SO THAT ALL EXISTING IMPROVEMENTS OF ANY KIND WILL BE FULLY PROTECTED FROM DAMAGE. WHERE THE EXCAVATION FOR A CONDUIT TRENCH, AND/OR STRUCTURE IS FIVE FEET OR MORE IN DEPTH, THE CONTRACTOR SHALL PROVIDE ADEQUATE SHEETING, WHICH SHALL CONFORM TO THE APPLICABLE CONSTRUCTION SAFETY ORDERS OF THE DIVISION OF INDUSTRIAL SAFETY OF THE STATE OF CALIFORNIA. THE CONTRACTOR SHALL ALWAYS COMPLY WITH OSHA REQUIREMENTS.

C. FINISH GRADE SHALL HAVE A 1.5% SLOPE AWAY FROM THE BLDG. FOR A DISTANCE NOT LESS THAN 5'-0" FROM THE BLDG.

D. EXTERIOR CONC. LANDINGS AT DOORS SHALL NOT BE MORE THAN 1/2 INCH LOWER THAN THE TOP OF THE DOORWAY THRESHOLD WITH 1/4 INCH PER FOOT SLOPE MAX.

E. REFER TO CIVIL, LANDSCAPE, PLUMBING & ELECTRICAL FOR UTILITY INFORMATION. CONTRACTOR TO COORDINATE ALL TRADES TO MAINTAIN PROPER CLEARANCES & AVOID CONFLICTS.

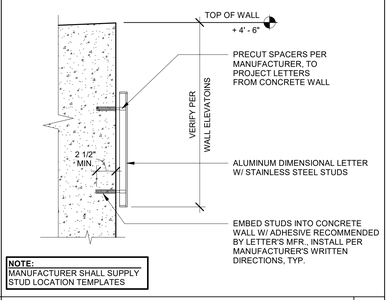

NOTE:
MANUFACTURER SHALL SUPPLY STUD LOCATION TEMPLATES

DIMENSIONAL LETTER ANCHORAGE

1 1/2" = 1'-0" | 24

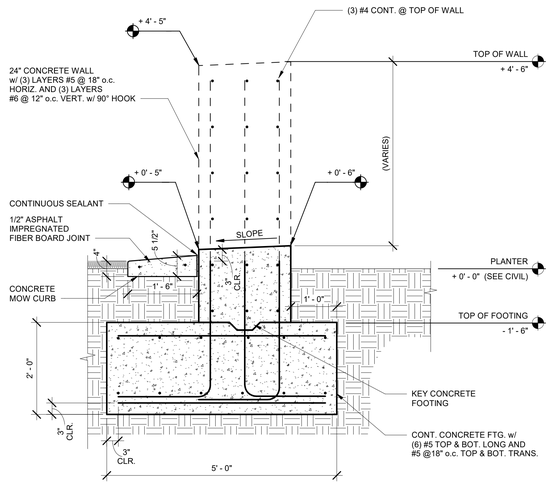

SITE WALL 'A' - SLOPED SIDE WALLS

3/4" = 1'-0" | 15

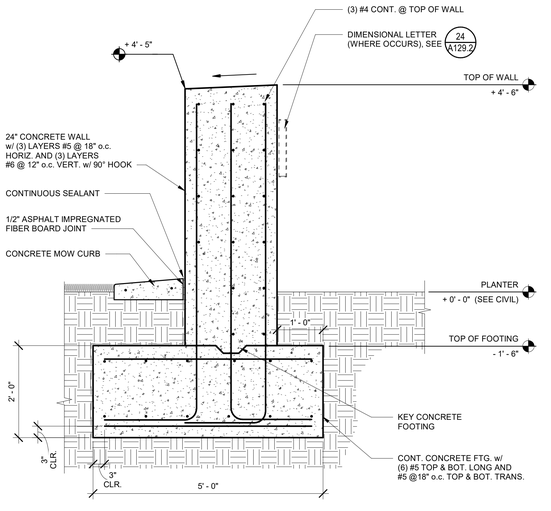

SITE WALL 'A'

3/4" = 1'-0" | 10

PLOT DATE: 9/9/2025 11:01:36 AM

IDENTIFICATION STAMP
DIV. OF THE STATE ARCHITECT
APP: 02-122821 INC: 2
REVIEWED FOR
SS ☑ FLS ☑ ACS ☑
DATE: 11/20/2025

Teter, Inc. expressly reserves its common law copyright and other property rights in these plans. This document, the ideas and designs incorporated herein, as an instrument of professional service, is not to be used in whole or part, for any other project without prior written authorization.

MARK	DATE	DESCRIPTION
A.	11/13/2025	DSA BACKCHECK

TETER, INC.
FRESNO HEADQUARTERS
VISALIA | BAKERSFIELD | MODESTO | SAN LUIS OBISPO
ARCHITECTS ENGINEERS CONNECTED

VISALIA CAMPUS UNIVERSITY CENTER
COLLEGE OF THE SEQUOIAS
915 S. MOONEY BLVD
915 S MOONEY BLVD, VISALIA, CA 93277

DRAWING TITLE
PROPOSED SITE PLAN - SITE WALL 'A' (INC. 2)

PROJECT NO.
22-12498

DRAWING
A129.2

\\teter-file1\Users\Gerardo.Juarez_TETR\Documents\12632-A-COS Promenade_gerardo.juarez7Z6URr.rvt

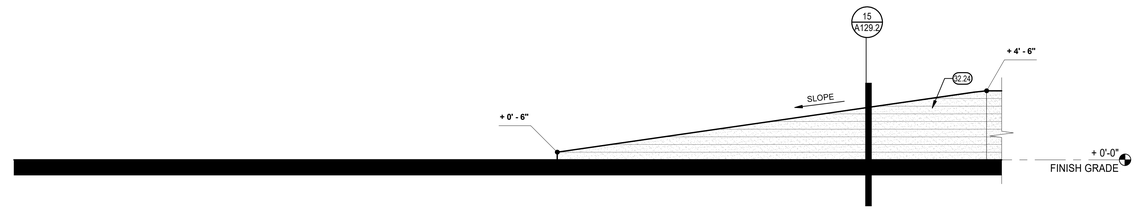

SITE WALL 'A'1 — 1/4" = 1'-0" — 1

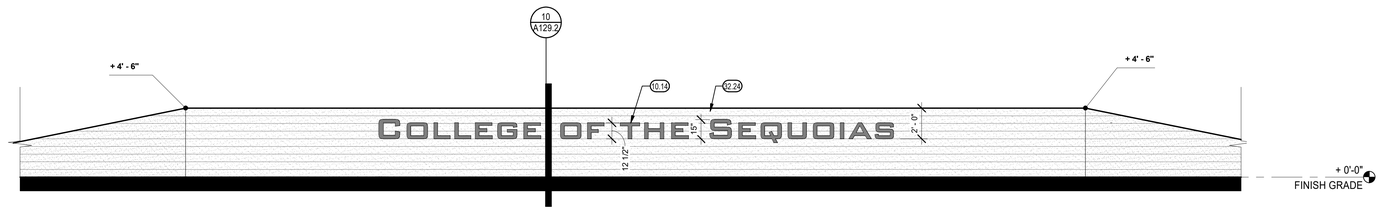

SITE WALL 'A'2 — 1/4" = 1'-0" — 2

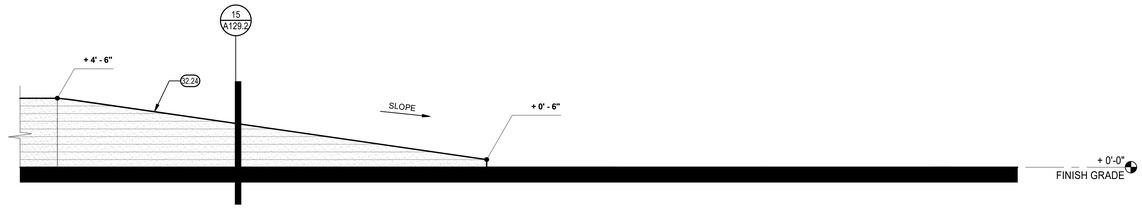

SITE WALL 'A'3 — 1/4" = 1'-0" — 3

KEYNOTES

20.00

10.14	WALL MOUNTED ALUMINUM DIMENSIONAL LETTER CHARACTER SIGNAGE, SEE WALL ELEVATION & **24 / A129.2**
32.24	24" WIDE CAST-IN-PLACE BOARD FORMED (AT EXTERIOR FACE) CONCRETE WALL, TYP.

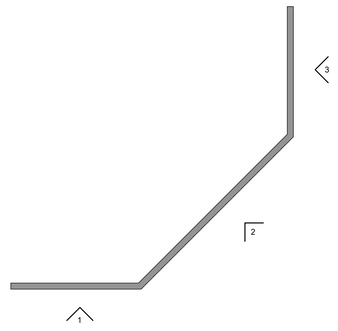

SITE WALL 'A'

KEYPLAN _____ N.T.S.

NORTH

SITE WALL - KEY PLAN — N.T.S. — 10

PLOT DATE: 9/9/2025 11:01:39 AM

IDENTIFICATION STAMP
DIV. OF THE STATE ARCHITECT
APP: 02-122821 INC: 2
REVIEWED FOR
SS ☑ FLS ☑ ACS ☑
DATE: 11/20/2025

Teter, Inc. expressly reserves its common law copyright and other property rights in these plans. This document, the ideas and designs incorporated herein, as an instrument of professional service, is not to be used in whole or part, for any other project, without prior written authorization.

MARK	DATE	DESCRIPTION
A.	11/13/2025	DSA BACKCHECK

LICENSED ARCHITECT — JONATHAN POLLARD — No. C-32277 — STATE OF CALIFORNIA

TETER, INC.
FRESNO HEADQUARTERS
VISALIA | BAKERSFIELD | MODESTO | SAN LUIS OBISPO
ARCHITECTS ENGINEERS CONNECTED

TETER

VISALIA CAMPUS UNIVERSITY CENTER
COLLEGE OF THE SEQUOIAS
915 S. MOONEY BLVD
915 S MOONEY BLVD, VISALIA, CA 93277

DRAWING TITLE
SITE ELEVATIONS (INC. 2)

PROJECT NO.
22-12498

DRAWING
A131.2

\\tet-file1\Users\Gerardo.Juarez_TETR\Documents\12632-A-COS Promenade_gerardo.juarez7Z6UR.rvt

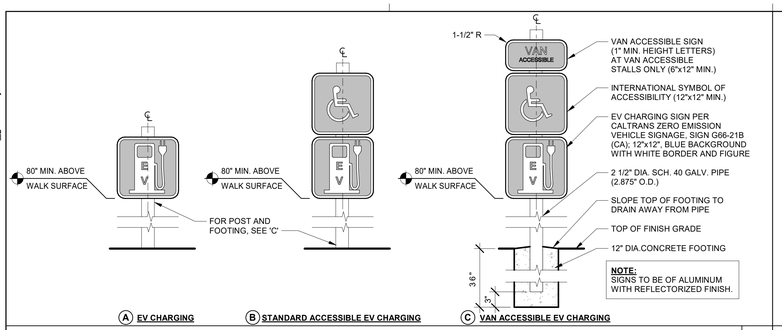

ELECTRIC VEHICLE PARKING SIGNAGE — 1" = 1'-0" — 21

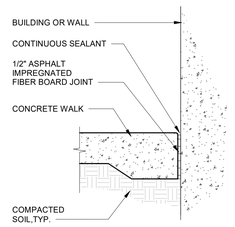

ISOLATION JOINT

TYPICAL ISOLATION JOINT — 1 1/2" = 1'-0" — 16

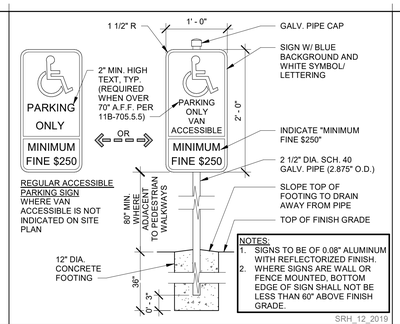

SRH_12_2019

ACCESS. PARKING STALL SIGN — 1" = 1'-0" — 11

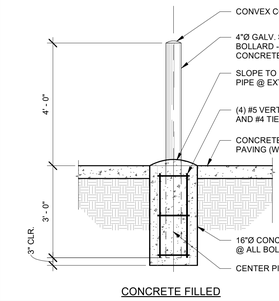

CONCRETE FILLED

PIPE BOLLARD — 1/2" = 1'-0" — 6

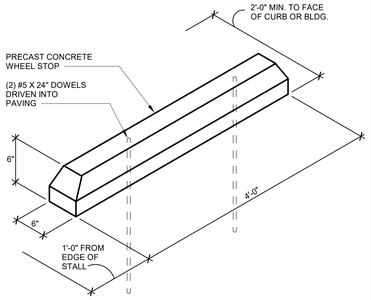

WHEEL STOP — 12" = 1'-0" — 1

BESS SIGN

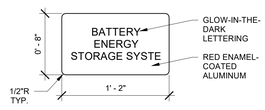

NOTE:
FOR SIGNAGE GENERAL NOTES, SEE DETAIL **18/A801.2**

TABLE 11B-703.5.5 (VISUAL CHARACTER HEIGHT)

HEIGHT TO FINISH FLOOR OR GROUND FROM BASELINE OF CHARACTER	HORIZONTAL VIEWING DISTANCE	MINIMUM CHARACTER HEIGHT
40 INCHES TO LESS THAN OR EQUAL TO 70 INCHES	LESS THAN 72 INCHES	5/8 INCHES
	72 INCHES AND GREATER	5/8 INCHES, PLUS 1/8 INCH PER FOOT OF VIEWING DISTANCE ABOVE 72 INCHES
GREATER THAN 70 INCHES TO LESS THAN OR EQUAL TO 120 INCHES	LESS THAN 180 INCHES	2 INCHES
	180 INCHES AND GREATER	2 INCHES, PLUS 1/8 INCH PER FOOT OF VIEWING DISTANCE ABOVE 180 INCHES
GREATER THAN 120 INCHES	LESS THAN 21 FEET	3 INCHES
	21 FEET AND GREATER	3 INCHES, PLUS 1/8 INCH PER FOOT OF VIEWING DISTANCE ABOVE 21 FOOT

SRH_12_2019

BESS - SIGNAGE — N.T.S. — 23

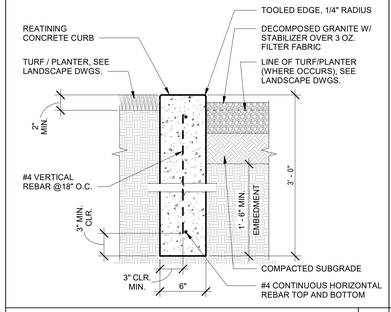

6" RETAINING CONC. CURB — 1 1/2" = 1'-0" — 17

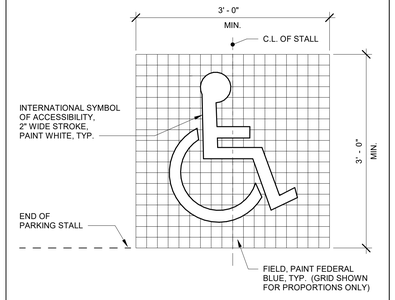

INTERNATIONAL SYMBOL OF ACCESSIBILTY — 1 1/2" = 1'-0" — 12

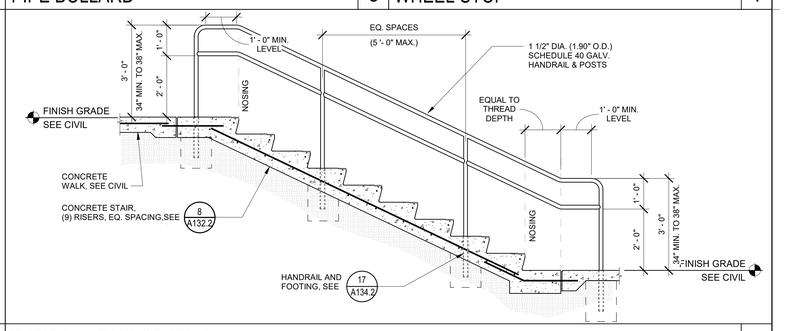

TYPICAL STAIR SECTION — 1/2" = 1'-0" — 2

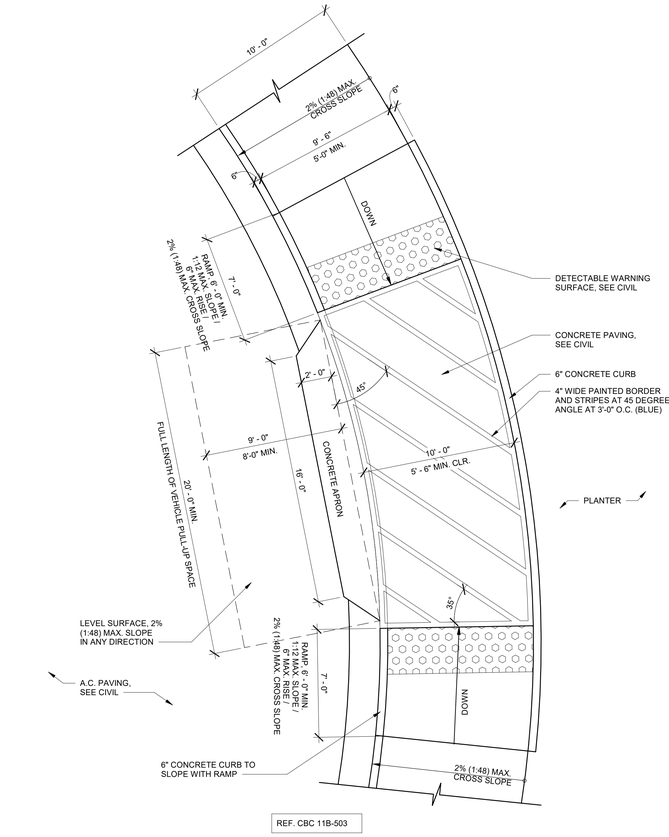

ACCESSIBLE LOADING AISLE — 1/4" = 1'-0" — 15

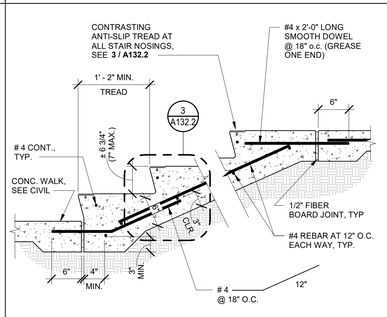

TYPICAL CONCRETE STAIR/STEPS — 1" = 1'-0" — 8

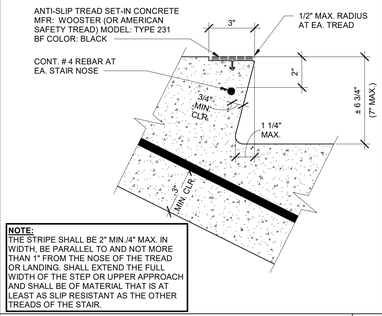

NOTE:
THE STRIPE SHALL BE 2" MIN./4" MAX. IN WIDTH, BE PARALLEL TO AND NOT MORE THAN 1" FROM THE NOSE OF THE TREAD OR LANDING. SHALL EXTEND THE FULL WIDTH OF THE STEP OR UPPER APPROACH AND SHALL BE OF MATERIAL THAT IS AT LEAST AS SLIP RESISTANT AS THE OTHER TREADS OF THE STAIR.

STAIR/STEPS THREAD & NOSING — 3" = 1'-0" — 3

CONC. MOWSTRIP AT (E) BLDG. — 1 1/2" = 1'-0" — 24

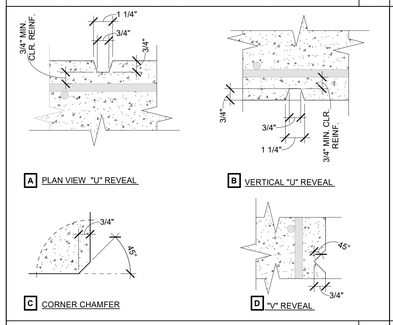

CONCRETE WALL REVEALS — 3" = 1'-0" — 9

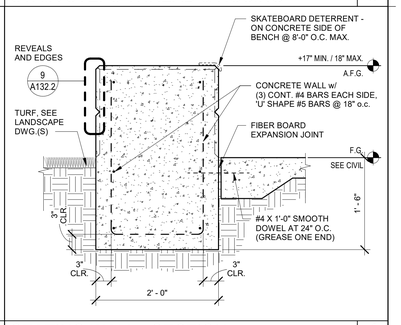

SEATING WALL - SECTION — 1" = 1'-0" — 4

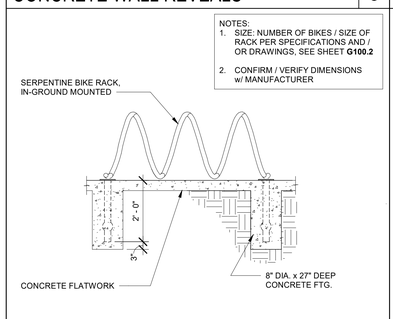

COILING BIKE RACK — 1/2" = 1'-0" — 10

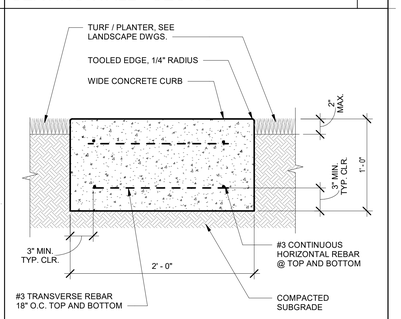

24" WIDE CONC. CURB — 1 1/2" = 1'-0" — 5

PLOT DATE: 10/30/2025 10:53:23 AM

IDENTIFICATION STAMP
DIV. OF THE STATE ARCHITECT
APP: 02-122821 INC: 2
REVIEWED FOR
SS ☑ FLS ☑ ACS ☑
DATE: 11/20/2025

Teter, Inc. expressly reserves its common law copyright and other property rights in these plans. This document, the ideas and designs incorporated herein, as an instrument of professional service, is not to be used in whole or in part, for any other project without prior written authorization.

MARK	DATE	DESCRIPTION
A.	11/13/2025	DSA BACKCHECK

TETER, INC.
ARCHITECTS ENGINEERS CONNECTED
FRESNO HEADQUARTERS
VISALIA | BAKERSFIELD | MODESTO | SAN LUIS OBISPO

VISALIA CAMPUS UNIVERSITY CENTER
COLLEGE OF THE SEQUOIAS
915 S. MOONEY BLVD
915 S MOONEY BLVD, VISALIA, CA 93277

DRAWING TITLE
SITE DETAILS (INC. 2)

PROJECT NO.
22-12498

DRAWING
A132.2

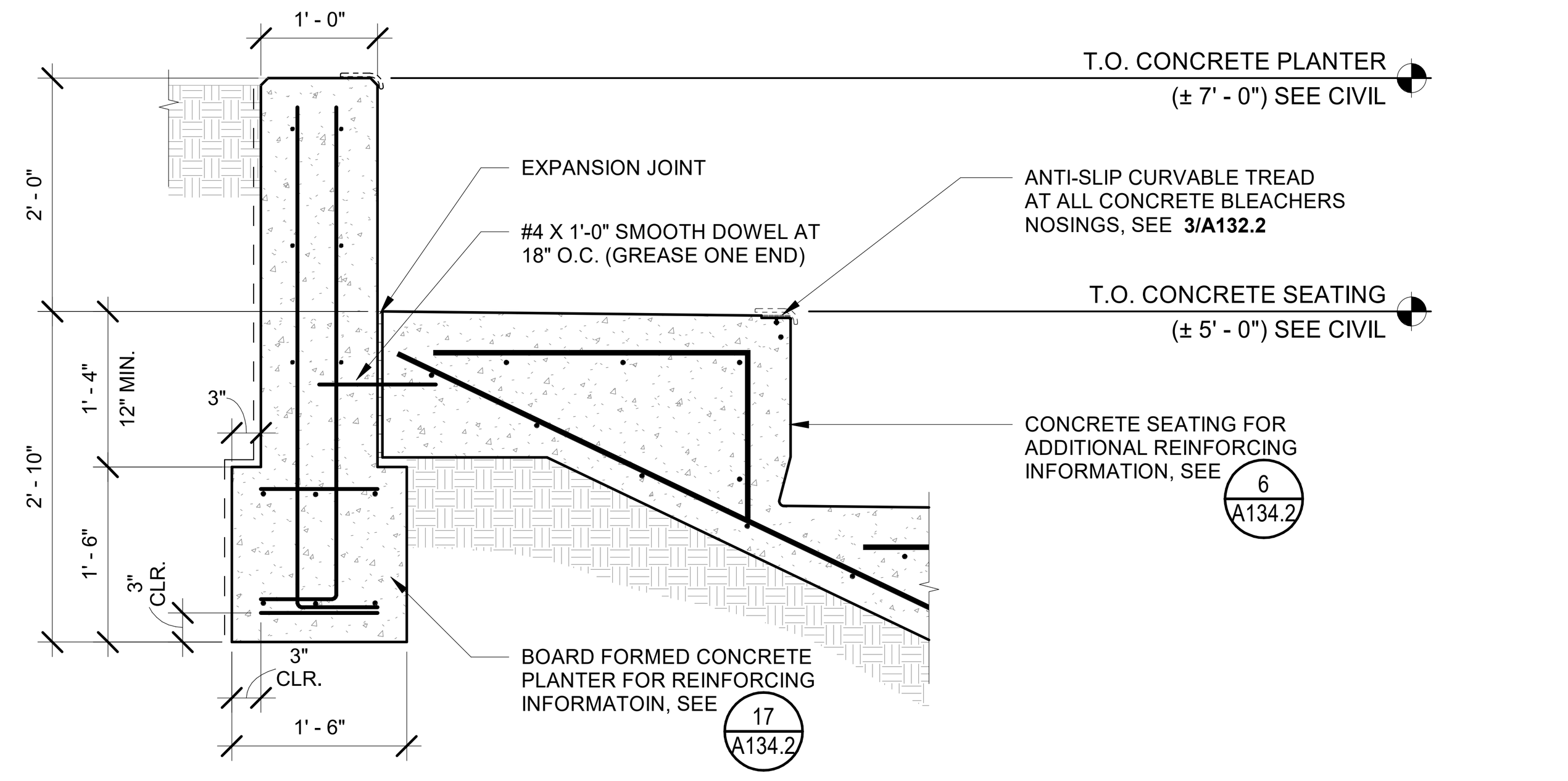

BOARD FORMED CONC. PLANTER AT CONCRETE SEATING 3/4" = 1'-0" 21

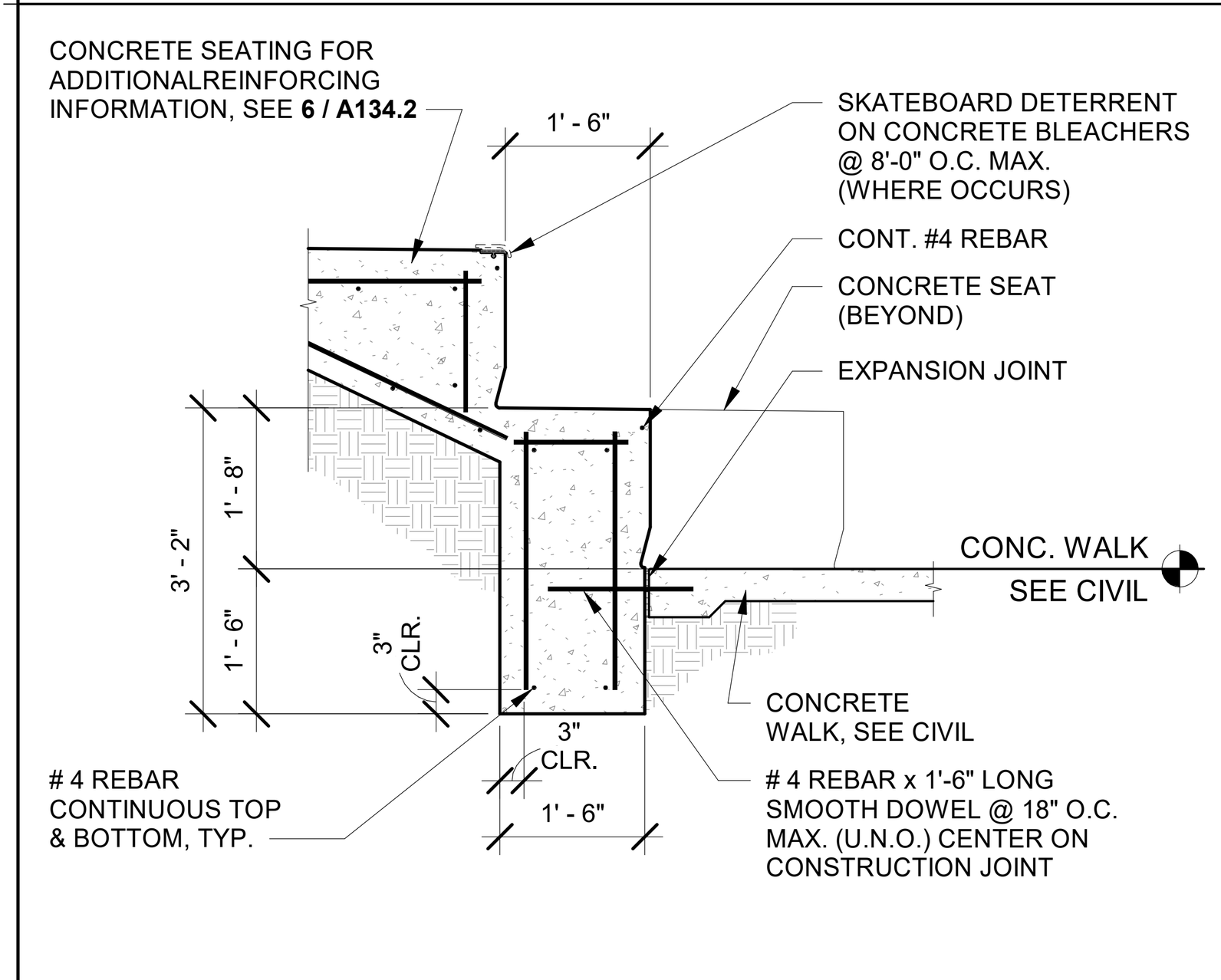

CONC. SEATING AT WHEELCHAIR SAPCE 1/2" = 1'-0" 27

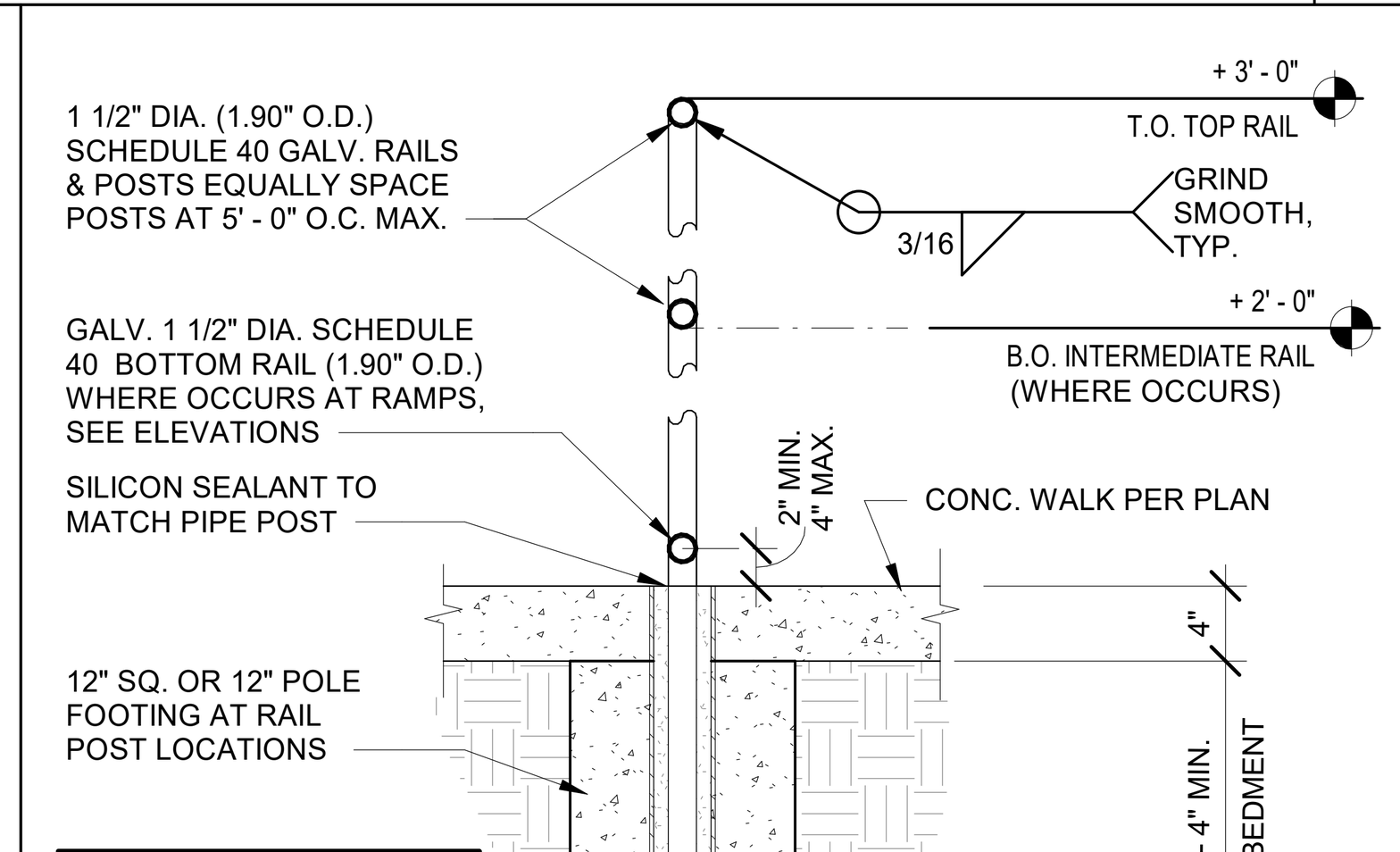

NOTE:
1. GRIND ALL WELDS AND EDGES SMOOTH
2. ENTIRE ASSEMBLY TO BE GALVANIZED AFTER WELDING IN LARGEST SECTIONS POSSIBLE

HANDRAIL AND FOOTING 1" = 1'-0" 22

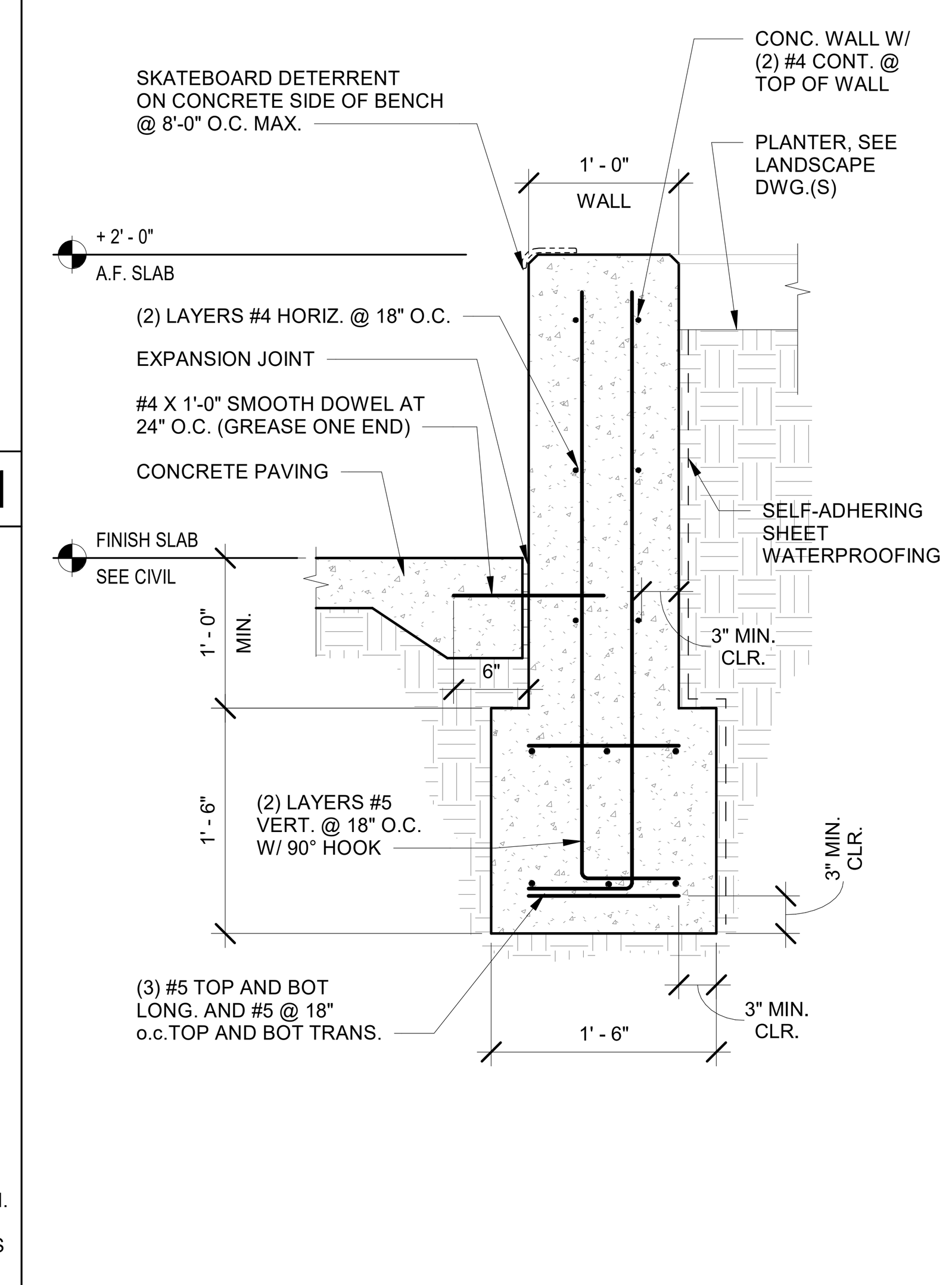

BOARD FORMED CONC. PLANTER 1" = 1'-0" 17

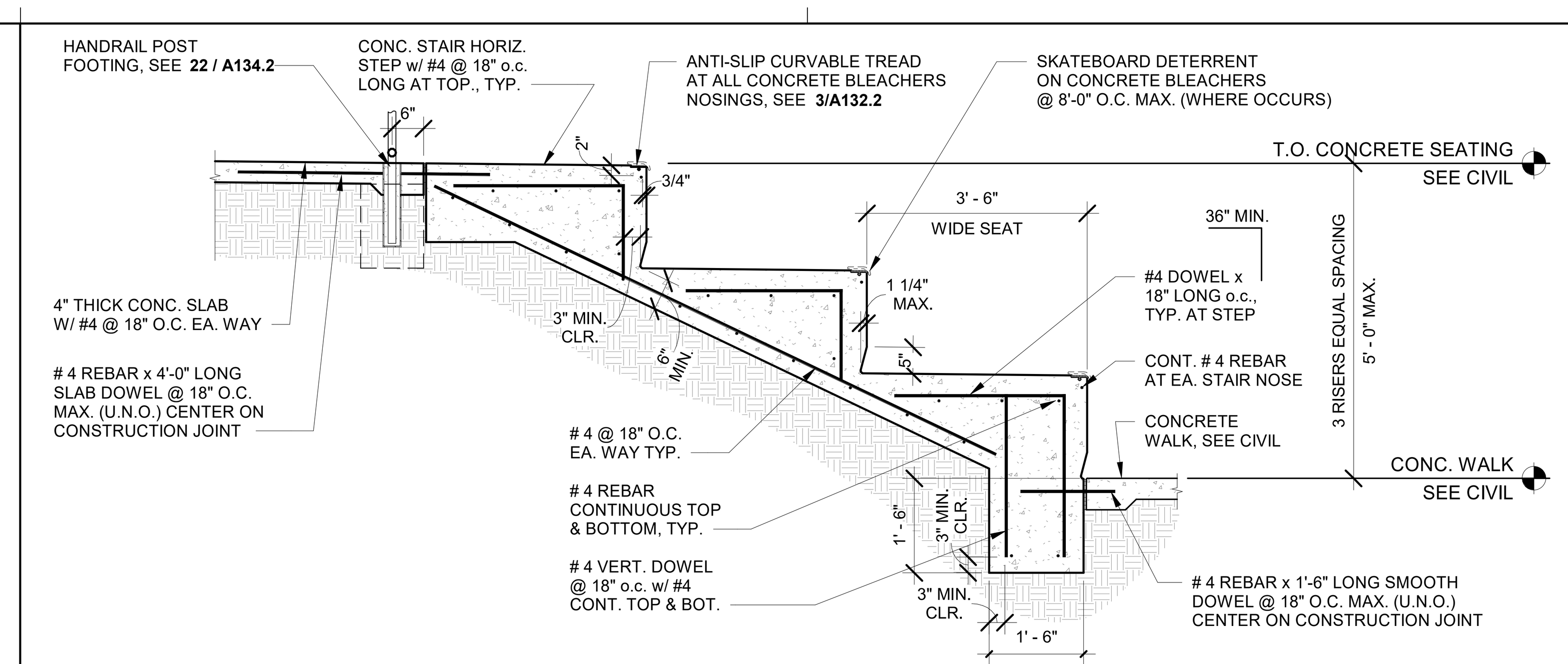

CONCRETE SEATING 1/2" = 1'-0" 6

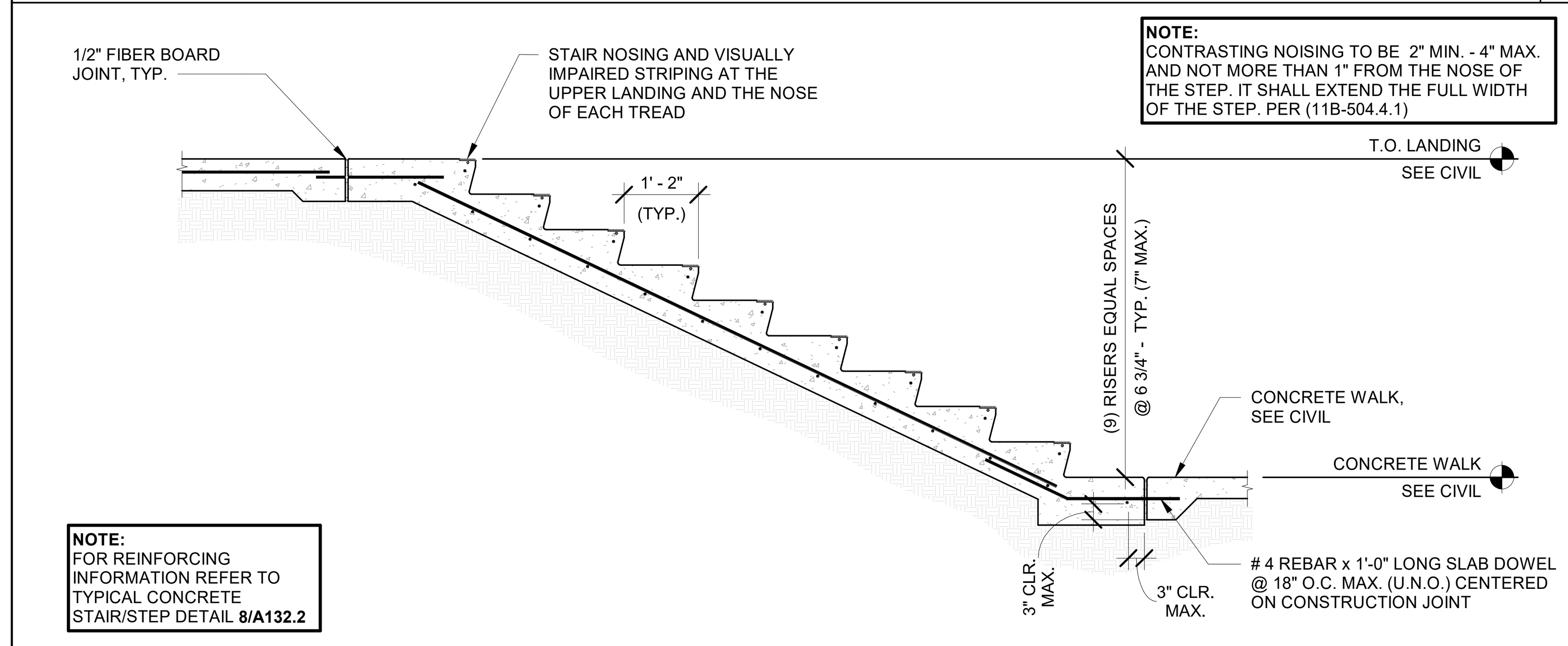

NOTE:
CONTRASTING NOISING TO BE 2" MIN. - 4" MAX. AND NOT MORE THAN 1" FROM THE NOSE OF THE STEP. IT SHALL EXTEND THE FULL WIDTH OF THE STEP. PER (11B-504.4.1)

NOTE:
FOR REINFORCING INFORMATION REFER TO TYPICAL CONCRETE STAIR/STEP DETAIL **8/A132.2**

CONCRETE STAIR SECTION 1/2" = 1'-0" 7

NOTE:
1. FOR EXPOSED WELDS PROVIDE SMOOTH AND BLENDED FINISH.

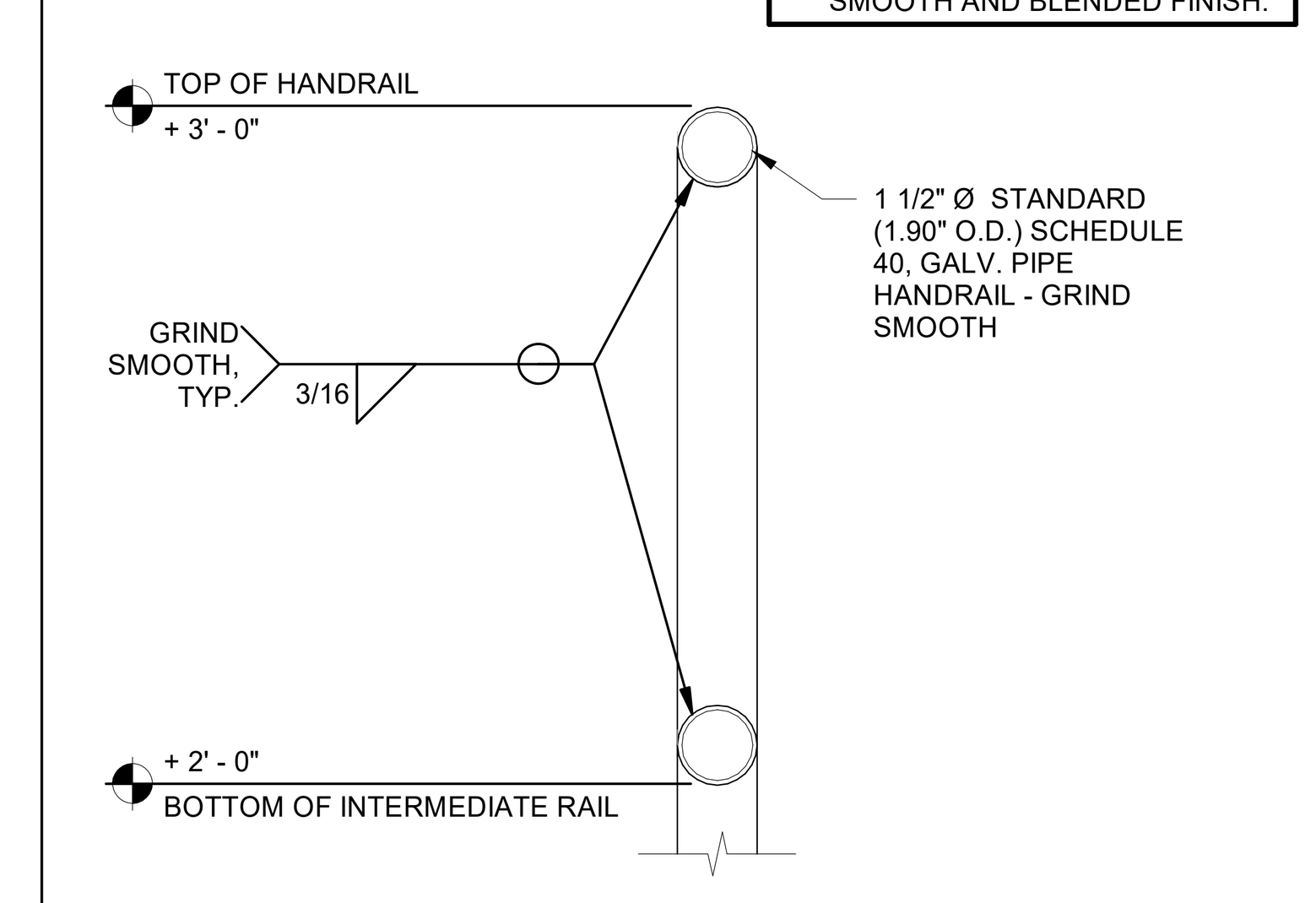

HANDRAIL TO POST 3" = 1'-0" 1

NOTE:
1. GRIND ALL WELDS SMOOTH. ENTIRE ASSEMBLY TO BE GALVANIZED AFTER WELDING.
2. FOR HANDRAIL TO POST, SEE 1 A134.2
3. CONCRETE WALL, FOOTING AND REINFORCEMENT INFORMATION, SEE 5 A134.2

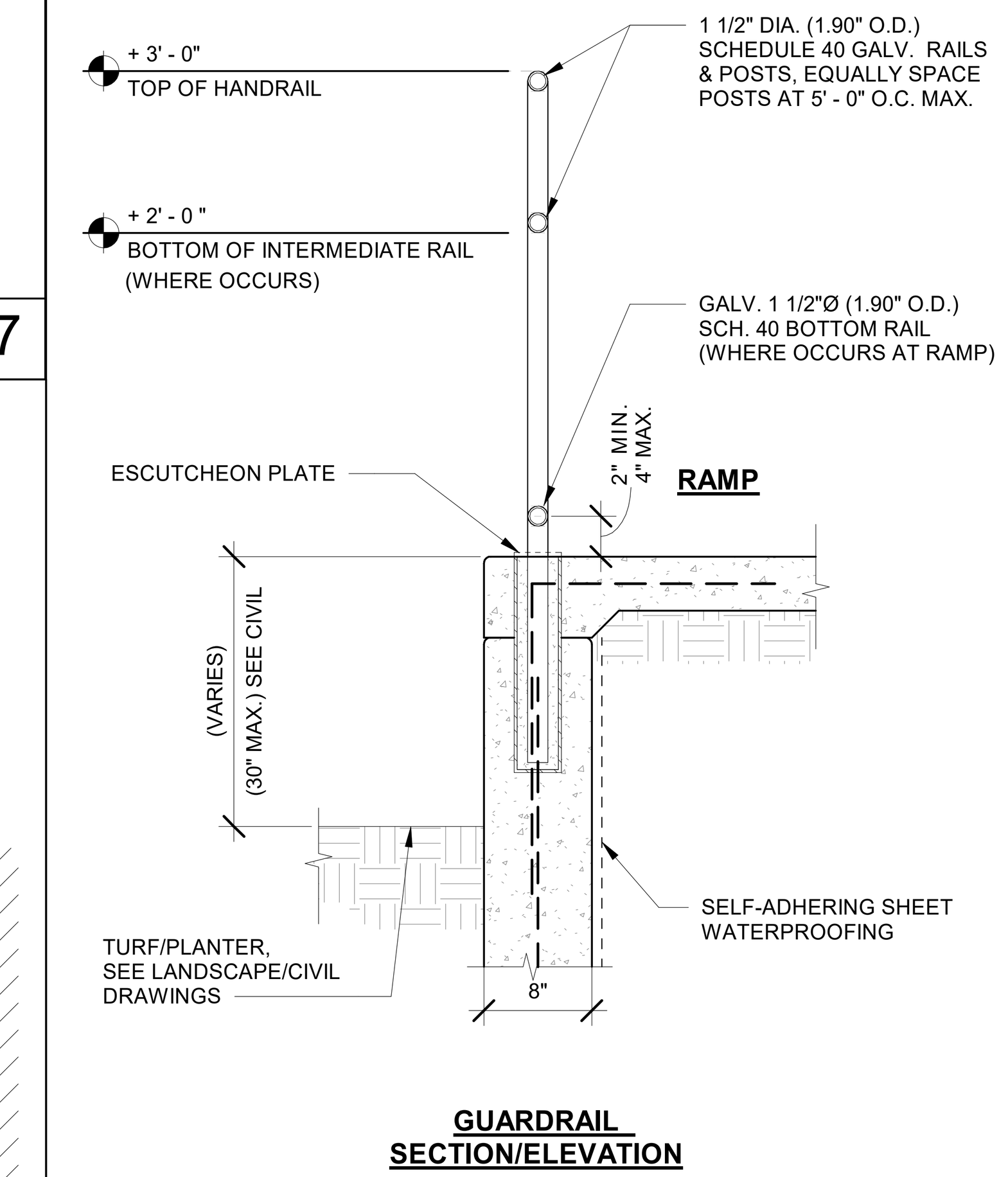

GUARDRAIL SECTION/ELEVATION

HANDRAIL AT RAMP 1" = 1'-0" 3

NOTE:
ALL TOP OF FOOTING ELEVATIONS SHALL BE (-)1'-6" UNLESS NOTED OTHERWISE AS INDICATED ON FOUNDATION NOTE #19 ON SHEET **S100.2**

NOTE:
FOR ADDITIONAL REINFORCING INFORMATION NOT SHOWN, SEE DETAIL 20 A134.2

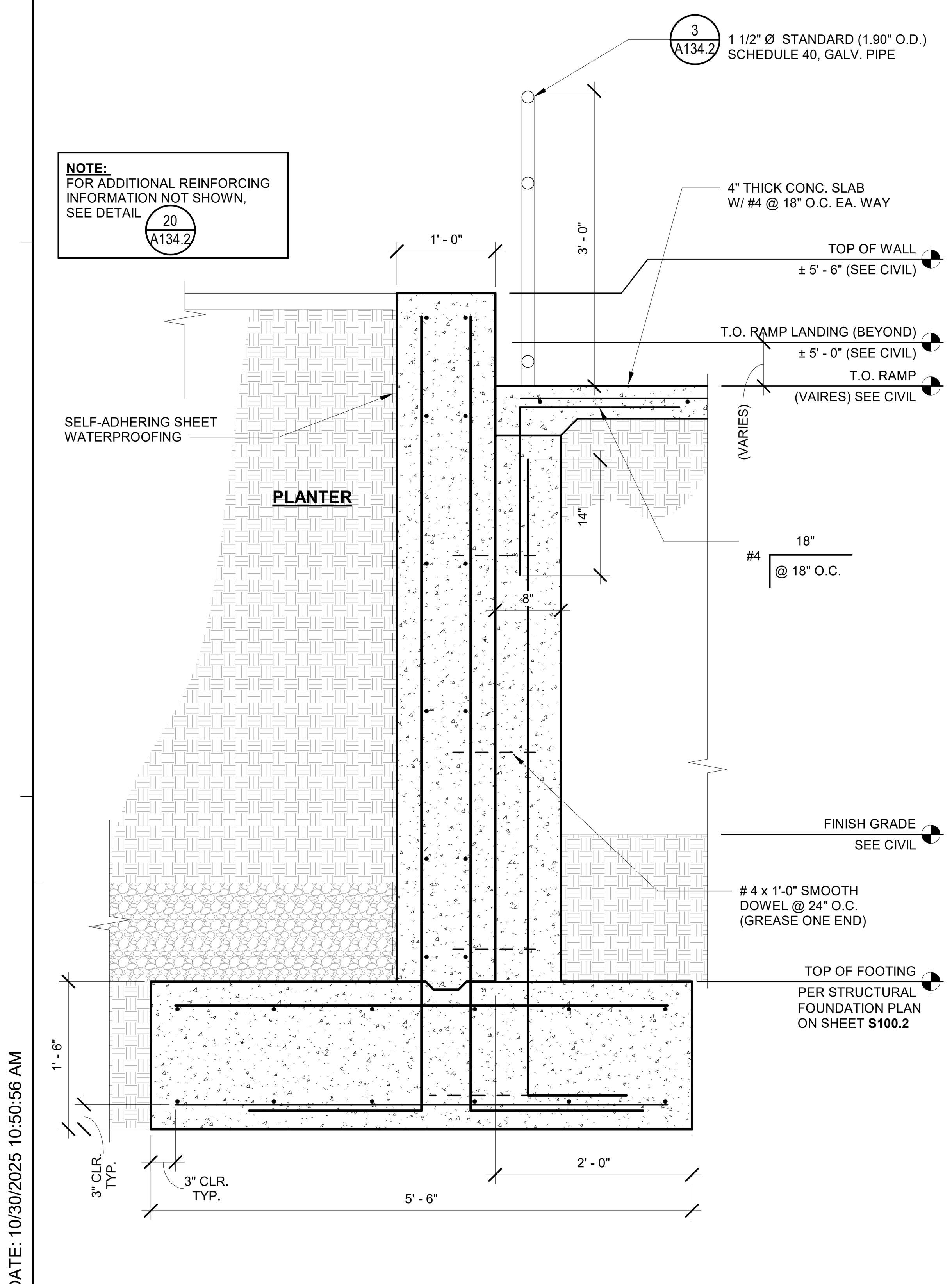

BOARD FORMED CONC. PLANTER WALL TO RAMP SECT. 1" = 1'-0" 25

NOTE:
ALL TOP OF FOOTING ELEVATIONS SHALL BE (-)1'-6" UNLESS NOTED OTHERWISE AS INDICATED ON FOUNDATION NOTE #19 ON SHEET **S100.2**

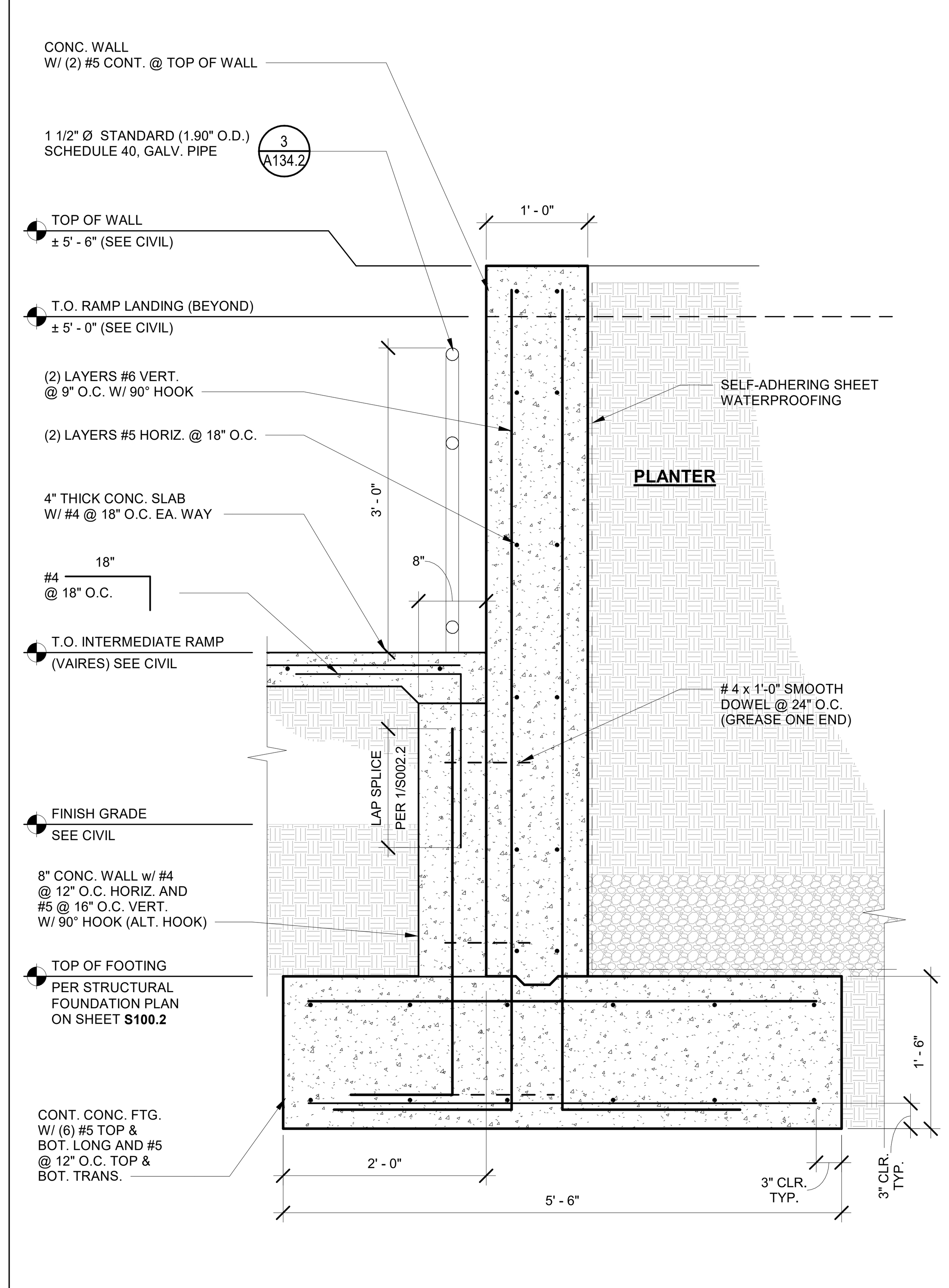

BOARD FORMED CONC. PLANTER WALL SECTION 1" = 1'-0" 20

NOTE:
ALL TOP OF FOOTING ELEVATIONS SHALL BE (-)1'-6" UNLESS NOTED OTHERWISE AS INDICATED ON FOUNDATION NOTE #19 ON SHEET **S100.2**

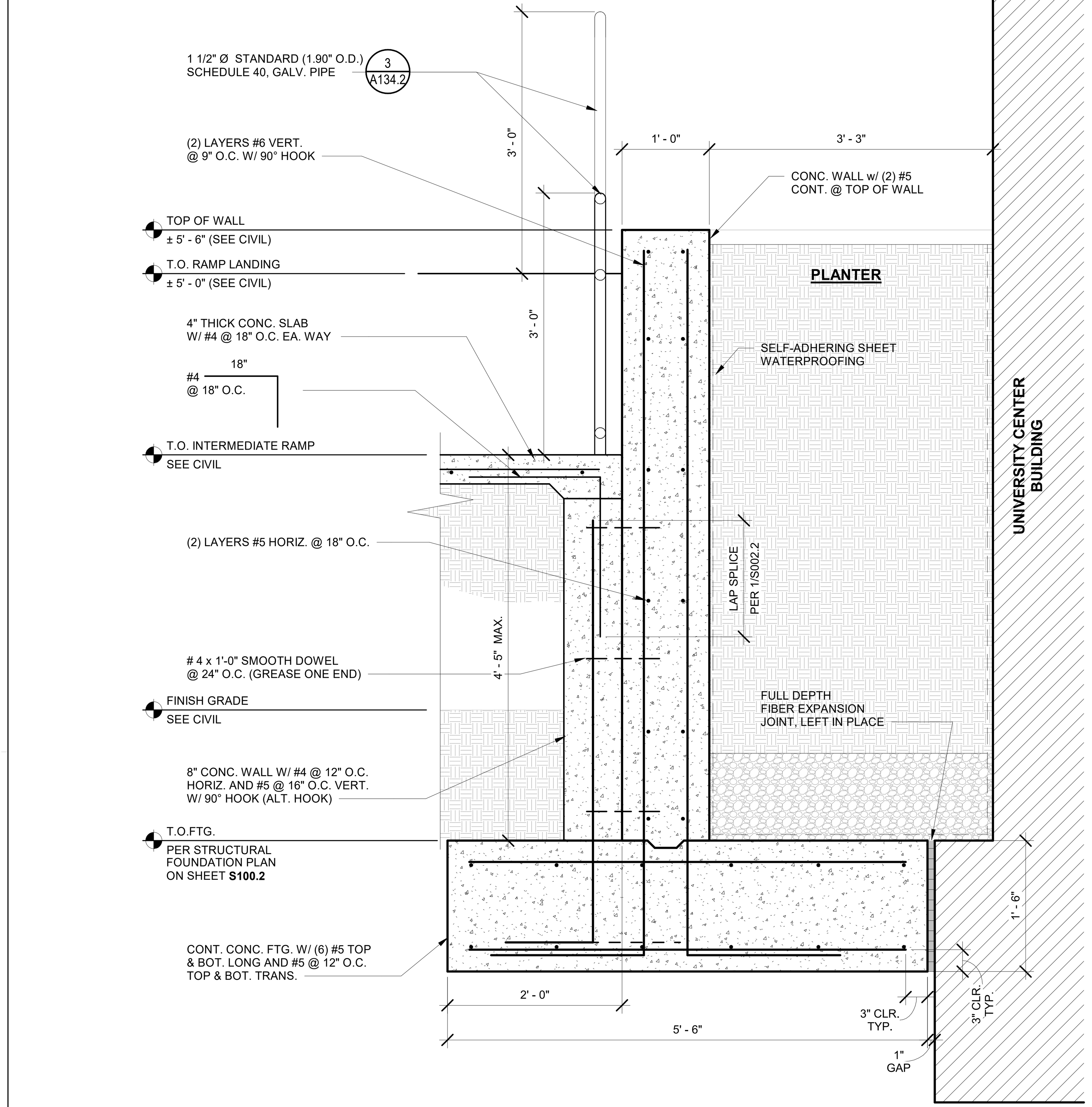

BOARD FORMED CONCRETE PLANTER 1" = 1'-0" 10

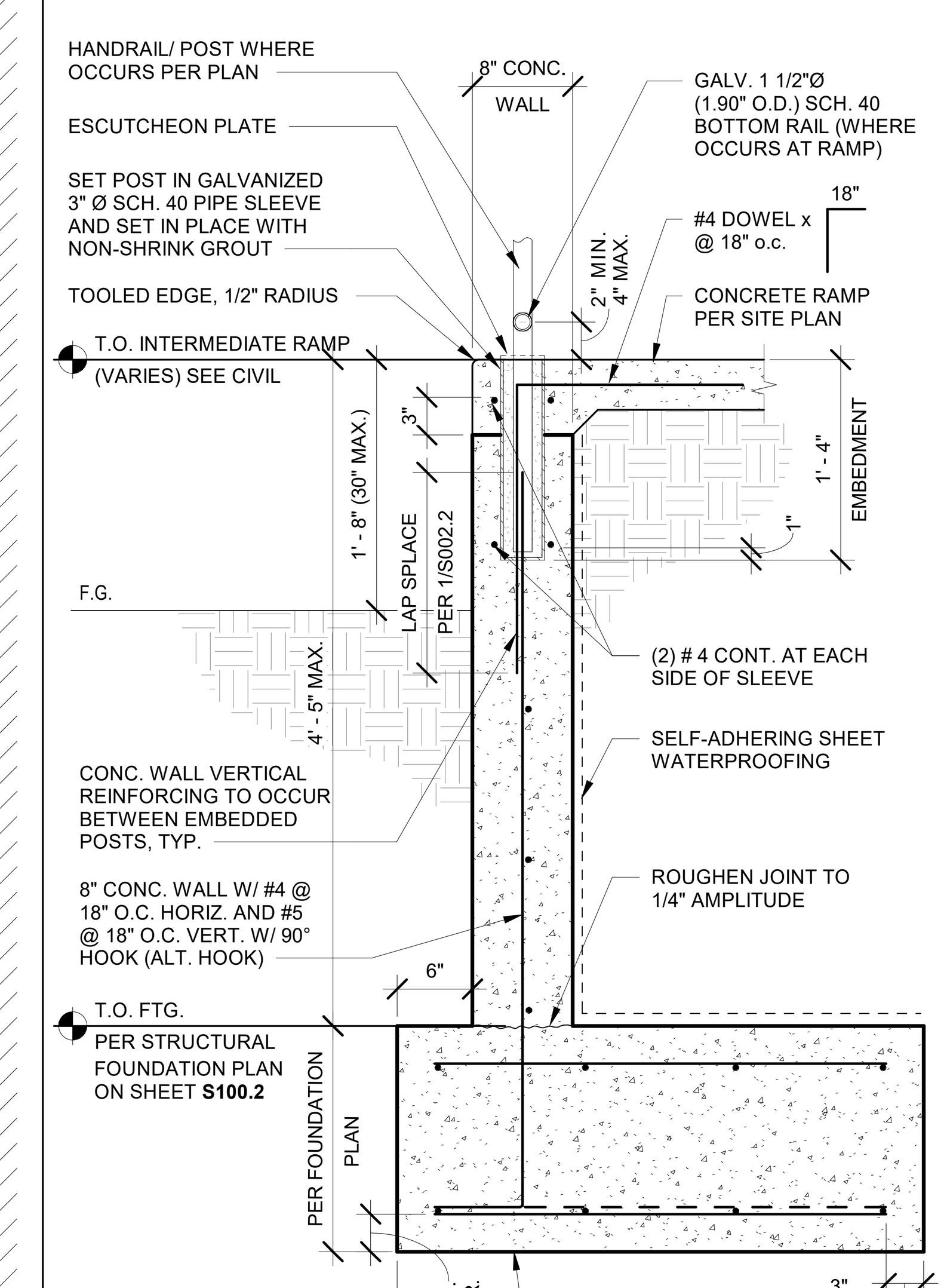

NOTE:
ALL TOP OF FOOTING ELEVATIONS SHALL BE (-)1'-6" UNLESS NOTED OTHERWISE AS INDICATED ON FOUNDATION NOTE #19 ON SHEET **S100.2**

TYP. RAILING AT CONC. RETAINING WALL 1" = 1'-0" 5

IDENTIFICATION STAMP
DIV. OF THE STATE ARCHITECT
APP: 02-122821 INC: 2
REVIEWED FOR
SS ☑ FLS ☑ ACS ☑
DATE: 11/20/2025

Teter, Inc. expressly reserves its common law copyright and other property rights in these plans. This document, the ideas and designs incorporated herein, as an instrument of professional service, is not to be used in whole or in part, for any other project without prior written authorization.

MARK	DATE	DESCRIPTION
A	11/13/2025	DSA BACKCHECK

LICENSED ARCHITECT JONATHAN COULTER C-33993 REN. 03-31-27 STATE OF CALIFORNIA

TETER, INC.
FRESNO HEADQUARTERS
VISALIA | BAKERSFIELD | MODESTO | SAN LUIS OBISPO
ARCHITECTS ENGINEERS CONNECTED

VISALIA CAMPUS UNIVERSITY CENTER
COLLEGE OF THE SEQUOIAS - INCREMENT 2
915 S. MOONEY BLVD
VISALIA, CALIFORNIA

DRAWING TITLE
SITE DETAILS (INCREMENT 2)

PROJECT NO.
22-12498

DRAWING
A134.2

\\tetr-file1\Users\Gerardo.Juarez_TETR\Documents\12498-A-UC_gerardo.juarez7Z6UR.rvt

PLOT DATE: 10/30/2025 10:50:56 AM

\\tet-file1\Users\tara.chong_TETR\Documents\12498-A-UC_tara.chong.rvt

IDENTIFICATION STAMP
DIV. OF THE STATE ARCHITECT
APP: 02-122821 INC: 2
REVIEWED FOR
SS ☑ FLS ☑ ACS ☑
DATE: 11/20/2025

Teter, Inc. expressly reserves its common law copyright and other property rights in these plans. This document, the ideas and designs incorporated herein, as an instrument of professional service, is not to be used in whole or in part, for any other project without prior written authorization.

MARK	DATE	DESCRIPTION
A.	11/13/2025	DSA BACKCHECK

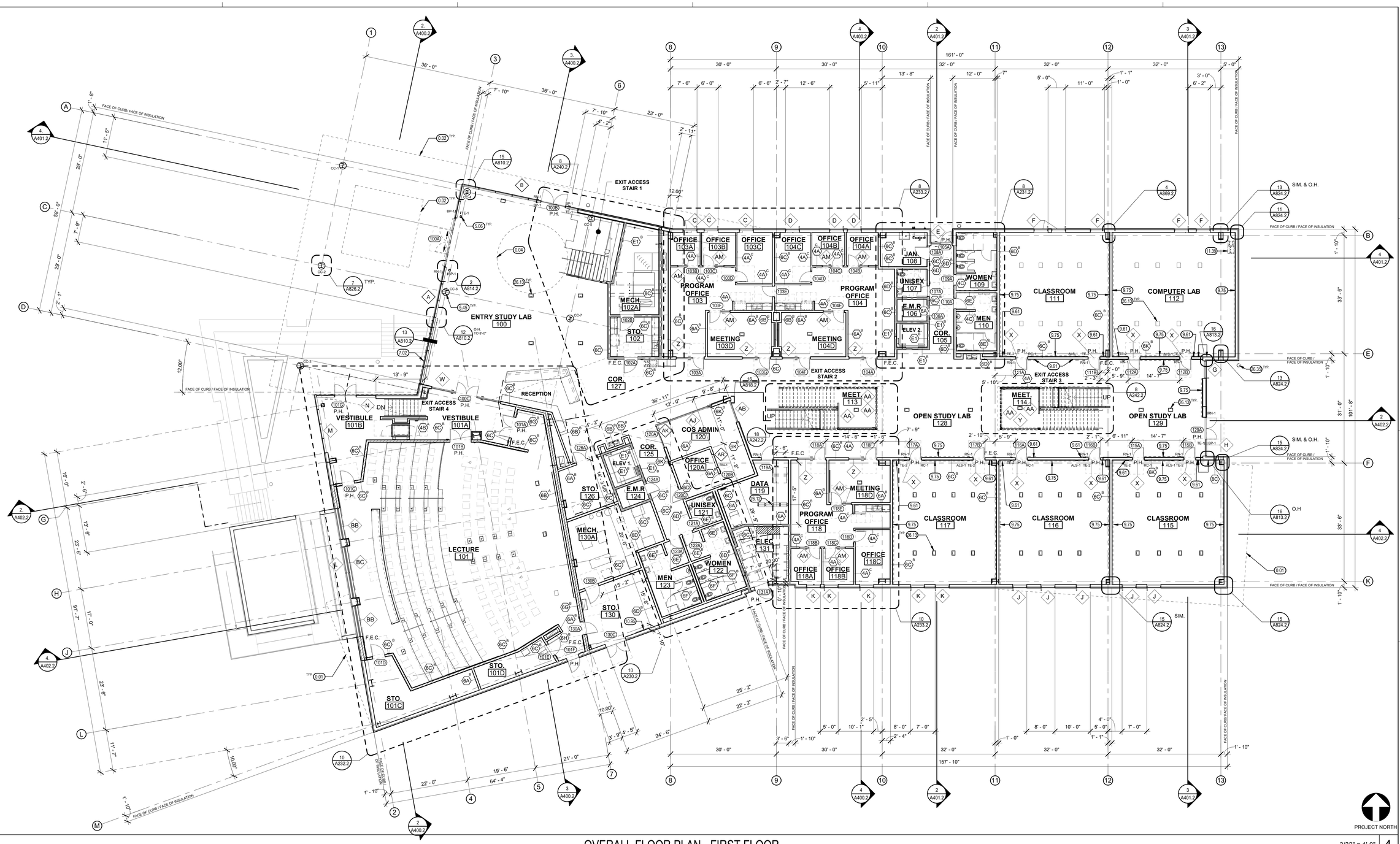

OVERALL FLOOR PLAN - FIRST FLOOR

3/32" = 1'-0" | 4

KEYNOTES (0.00)

0.01	LINE OF FLOOR ABOVE
0.02	LINE OF ROOF ABOVE
0.04	LINE OF CEILING ABOVE
5.06	HSS, SEE STRUCTURAL
5.45	COLUMN ENCLOSURE, SEE **7 / A826.2**
7.02	DRAIN BOARD SYSTEM WITH TIE IN TO STORM DRAIN, SEE CIVIL AND **14 / A821.2**
9.61	VINYL COVERED TACKABLE WALL PANELS
9.75	DRY ERASE WALL COVERING
10.95	48" LONG GRAB BAR
11.39	PRINTER, OFCI
26.12	DATA RACK, SEE ELECTRICAL
26.13	RECESSED FLOOR BOX FLUSH WITH FLOOR, SEE ELECTRICAL
26.35	WAP BOLLARD, SEE ELECTRICAL

WALL LEGEND

- #/A — PARTITION "TYPE" REFERENCE (SEE A001.2)
- PARTITION "DETAIL" REFERENCE (SEE A001.2)
- 1 HR FIRE BARRIER SEPARATION SEE A001.2 FOR PARTITION TYPES. SEE A870.2, A871.2, A872.2 AND A873.2 FOR FIRE RESISTIVE CONSTRUCTION
- SPECIALIZED ACCOUSTIC TREATMENT REQUIRED FOR THESE WALLS. ALL PENETRATIONS OF SERVICES TO BE ACOUSTICALLY ISOLATED. SEE SHEETS A866.2 AND A867.2 FOR ADDITIONAL INFORMATION

GROUND FLOOR ELECTRICAL ROOM SEPARATION:
- WALLS: 1-HR FIRE BARRIER SEPARATION BETWEEN ELECTRICAL ROOMS AND ADJACENT SPACES WITH MINIMUM 45 MINUTE OPENING PROTECTION
- FLOOR ABOVE: 1-HR HORIZONTAL ASSEMBLY BETWEEN ELECTRICAL ROOM AND ADJACENT SPACES ABOVE
- STRUCTURAL MEMBERS SUPPORTING WALLS OR HORIZONTAL ASSEMBLIES OF ELECTRICAL ROOM INCIDENTAL USE SEPARATION ARE NOT REQUIRED TO BE OF RATED CONSTRUCTION UNLESS REQUIRED BY OTHER CODE PROVISIONS (CBC 509.4.1)
- WALL PROTECTION: INDICATED ON FLOOR PLAN
- FLOOR ASSEMBLY: SEE **14 / A870.2**

LEGEND

- MINIMUM 30"X48" WHEELCHAIR CLEAR SPACE
- MINIMUM 60" DIAMETER WHEELCHAIR TURN AROUND SPACE
- TRP.1 — WALL SIGNAGE, SEE **3 / A801.2**
- 201A — DOOR REFERENCE SEE DOOR SCHEDULE ON SHEET A700.2
- XX — WINDOW REFERENCE SEE WINDOW SCHEDULE ON SHEET A701.2, A702.2, A703.2 & A704.2 & A705.2
- P.H. — PANIC HARDWARE TO BE INSTALLED AT THIS DOOR, SEE DOOR HARDWARE SCHEDULE
- CC-X / BC-X — COLUMN COVER / BEAM COVER, SEE **2 / A826.2**
- F.E.C. — FIRE EXTINGUISHER & CABINET, SEE **26 / A863.2**

GENERAL NOTES

A. FOR TYPICAL ACCESSIBLE TOILET ROOM FIXTURE AND ACCESSORY MOUNTING HEIGHTS AND CLEARANCES, SEE **2 / A800.2** & **3 / A800.2**

B. FOR TYPICAL CASEWORK ANCHORAGE , SEE **22 / A864.2**

C. FIRE EXTINGUISHER SHALL BE 2A: 10B:C MIN. PER NFPA 10, ONE FOR EVERY 3,000 S.F. OR PORTION THEREOF & TRAVEL DISTANCE NOT TO EXCEED 75'-0",

D. DIMENSIONS WITH "MIN.","CLR.", ARE MEASURED FROM FACE OF WALL FINISH.

E. TYP. INTERIOR WALL FINISH FOR STUD WALLS: 5/8" TYPE 'X' GYP. BD., WATER RESISTANT TYPE IN RESTROOMS WHERE LOCATED WITHIN 2'-0" OF THE FRONT AND/OR SIDES OF PLUMBING FIXT. GYP. BD. APPLICATION SHALL COMPLY W/ CBC SECTION 2508. GYP. BD. SHALL BE FASTENED TO SUPPORTS W/ SCREWS.

F. ACOUSTICAL INSULATION: ALL INTERIOR STUD WALLS OF THE FOLLOWING SPACES INDICATED BELOW SHALL BE INSULATED W/ ACOUSTICAL INSULATION. FOR ACOUSTICAL WALL DETAIL, SEE **11 / A866.2** , **12 / A866.2** , AND **14 / A866.2**

a. ALL WALLS OF: PRIVATE OFFICES PROGRAM OFFICES, FACULTY LOUNGES, ELECTRICAL/ MECH. ROOMS, TOILET ROOMS, CLASSROOMS, LABS, LECTURE & MEETING ROOMS

H. FOR ACCESSIBLE DOOR MANEUVERING CLEARANCES, SEE **18 / A800.2**

I. FOR ACCESSIBLE SINK KNEE/TOE SPACE, SEE **10 / A800.2**

J. FOR ACCESSIBLE WORK COUNTER KNEE/TOE SPACE, SEE **5 / A864.2**

K. FOR PENETRATIONS OF FIRE RATED ASSEMBLIES SEE **2 / A870.2** , **5 / A870.2** **7 / A870.2** · **10 / A870.2** · **12 / A870.2** · **13 / A871.2**

TETER, INC.
FRESNO HEADQUARTERS
VISALIA | BAKERSFIELD | MODESTO | SAN LUIS OBISPO
ARCHITECTS ENGINEERS CONNECTED

VISALIA CAMPUS UNIVERSITY CENTER
COLLEGE OF THE SEQUOIAS - INCREMENT 2
915 S. MOONEY BLVD
VISALIA, CALIFORNIA

DRAWING TITLE: FLOOR PLAN - FIRST FLOOR PLAN

PROJECT NO. 22-12498

DRAWING A210.2

PLOT DATE: 11/10/2025 8:46:51 AM

\\tet-file1\Users\tara.chong_TETR\Documents\12498-A-UC_tara.chong.rvt

IDENTIFICATION STAMP
DIV. OF THE STATE ARCHITECT
APP: 02-122821 INC: 2
REVIEWED FOR
SS ☑ FLS ☑ ACS ☑
DATE: 11/20/2025

Teter, Inc. expressly reserves its common law copyright and other property rights in these plans. This document, the ideas and designs incorporated herein, as an instrument of professional service, is not to be used in whole or part, for any other project without prior written authorization.

MARK	DATE	DESCRIPTION
A.	11/13/2025	DSA BACKCHECK

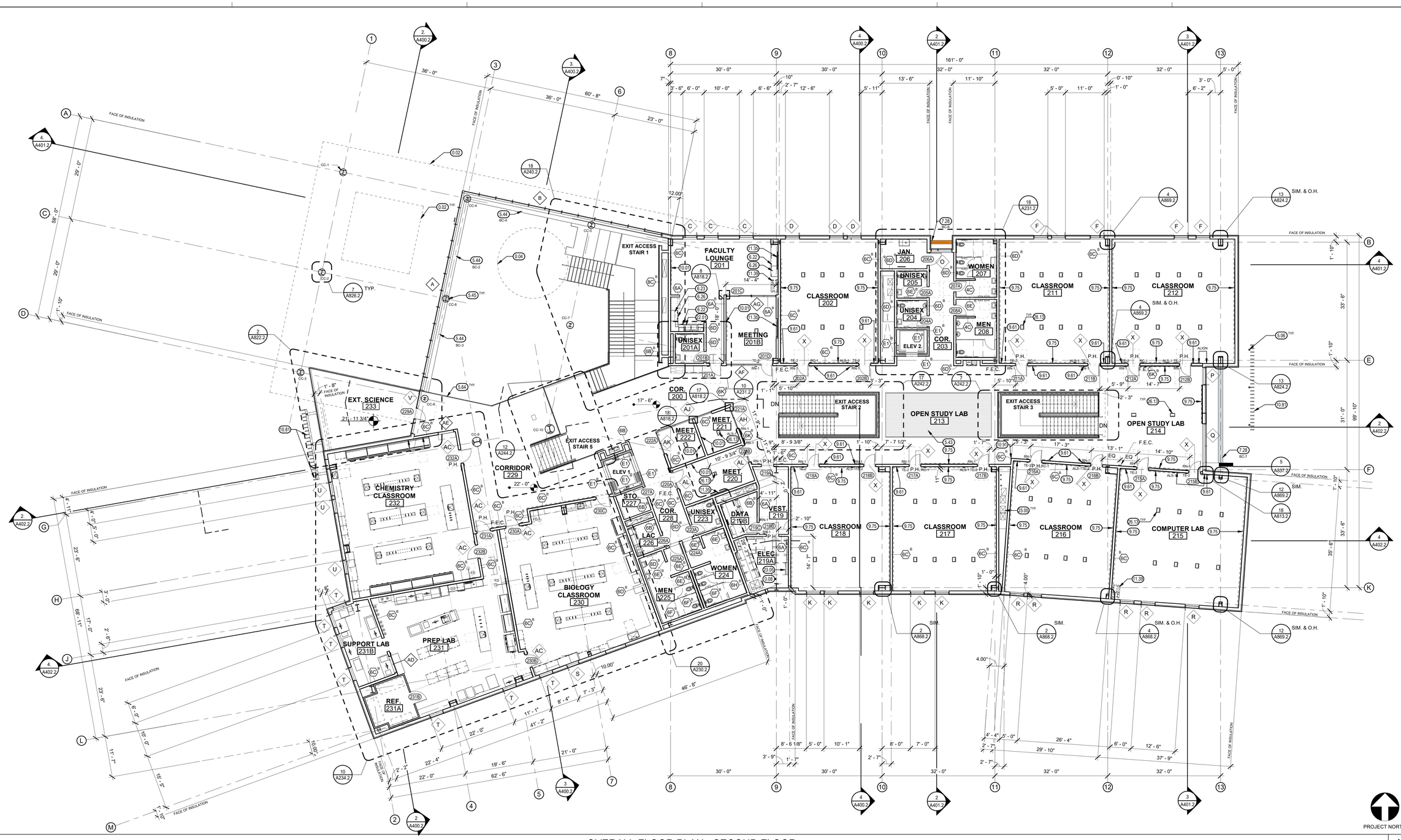

PROJECT NORTH

OVERALL FLOOR PLAN - SECOND FLOOR

3/32" = 1'-0" | 4

KEYNOTES (x.00)

0.02	LINE OF ROOF ABOVE
0.04	LINE OF CEILING ABOVE
0.08	SECOND FLOOR ELECTRICAL ROOM DOES NOT REQUIRE AN INCIDENTAL USE SEPARATION (EQUIPMENT CAPABILITIES ARE BELOW THE THRESHOLD REQUIRING SEPARATION)
5.06	HSS, SEE STRUCTURAL
5.43	METAL BAR GRATING
5.44	BEAM ENCLOSURE, SEE **18 / A826.2**
5.45	COLUMN ENCLOSURE, SEE **7 / A826.2**
5.64	GUARDRAIL, TYP. SEE **24 / A850.2**
6.22	PLASTIC LAMINATE BASE CABINET, SEE INTERIOR ELEVATIONS
6.23	PLASTIC LAMINATE UPPER CABINET, SEE INTERIOR ELEVATIONS
6.26	PLASTIC LAMINATE COUNTER TOP, SEE INTERIOR ELEVATIONS
7.28	BEAM ENCLOSURE, SEE **2 / A827.2**
9.61	VINYL COVERED TACKABLE WALL PANELS
9.75	DRY ERASE WALL COVERING
10.01	MARKER BOARD, SEE **20 / A863.2**
10.81	VERTICAL BRISE SOLEIL, SEE **5 / A828.2** & **5 / A829.2**
10.91	CORNER GUARD, SEE **10 / A863.2**
11.35	MONITOR BRACKET OFCI, WALL MOUNTED, SEE **10 / A864.2**
11.39	PRINTER, OFCI
22.01	ACCESSIBLE PLUMBING FIXTURE, SEE PLUMBING
23.05	DUCT, SEE MECHANICAL
26.13	RECESSED FLOOR BOX FLUSH WITH FLOOR, SEE ELECTRICAL

WALL LEGEND

- #/# — PARTITION "TYPE" REFERENCE (SEE A001.2) / PARTITION "DETAIL" REFERENCE (SEE A001.2)
- 1 HR FIRE BARRIER SEPARATION SEE A001.2 FOR PARTITION TYPES. SEE A870.2, A871.2, A872.2 AND A873.2 FOR FIRE RESISTIVE CONSTRUCTION
- SPECIALIZED ACCOUSTIC TREATMENT REQUIRED FOR THESE WALLS. ALL PENETRATIONS OF SERVICES TO BE ACOUSTICALLY ISOLATED. SEE SHEETS A866.2 AND A867.2 FOR ADDITIONAL INFORMATION

LEGEND

- MINIMUM 30"X48" WHEELCHAIR CLEAR SPACE
- MINIMUM 60" DIAMETER WHEELCHAIR TURN AROUND SPACE
- TBD — WALL SIGNAGE, SEE **3 / A801.2**
- 201A — DOOR REFERENCE SEE DOOR SCHEDULE ON SHEET A700.2
- XX — WINDOW REFERENCE SEE WINDOW SCHEDULE ON SHEET A701.2, A702.2, A703.2 & A704.2 & A705.2
- P.H. — PANIC HARDWARE TO BE INSTALLED AT THIS DOOR, SEE DOOR HARDWARE SCHEDULE
- CC-X / BC-X — COLUMN COVER / BEAM COVER, SEE **2 / A826.2**
- F.E.C. — FIRE EXTINGUISHER & CABINET, SEE **26 / A863.2**

GENERAL NOTES

A. FOR TYPICAL ACCESSIBLE TOILET ROOM FIXTURE AND ACCESSORY MOUNTING HEIGHTS AND CLEARANCES, SEE **2 / A800.2 & 3 / A800.2**

B. FOR TYPICAL CASEWORK ANCHORAGE , SEE **22 / A864.2**

C. FIRE EXTINGUISHER SHALL BE 2A: 10B:C MIN. PER NFPA 10, ONE FOR EVERY 3,000 S.F. OR PORTION THEREOF & TRAVEL DISTANCE NOT TO EXCEED 75'-0".

D. DIMENSIONS WITH "MIN.","CLR.", ARE MEASURED FROM FACE OF WALL FINISH.

E. TYP. INTERIOR WALL FINISH FOR STUD WALLS: 5/8" TYPE 'X' GYP. BD., WATER RESISTANT TYPE IN RESTROOMS WHERE LOCATED WITHIN 2'-0" OF THE FRONT AND/OR SIDES OF PLUMBING FIXT. GYP. BD. APPLICATION SHALL COMPLY W/ CBC SECTION 2508. GYP. BD. SHALL BE FASTENED TO SUPPORTS W/ SCREWS.

F. ACOUSTICAL INSULATION: ALL INTERIOR STUD WALLS OF THE FOLLOWING SPACES INDICATED BELOW SHALL BE INSULATED W/ ACOUSTICAL INSULATION. FOR ACOUSTICAL WALL DETAIL, SEE **11 / A866.2** , **12 / A866.2** , AND **14 / A866.2**

   a. ALL WALLS OF: PRIVATE OFFICES PROGRAM OFFICES, FACULTY LOUNGES, ELECTRICAL/ MECH. ROOMS, TOILET ROOMS, CLASSROOMS, LABS, LECTURE & MEETING ROOMS

H. FOR ACCESSIBLE DOOR MANEUVERING CLEARANCES, SEE **18 / A800.2**

I. FOR ACCESSIBLE SINK KNEE/TOE SPACE, SEE **10 / A800.2**

J. FOR ACCESSIBLE WORK COUNTER KNEE/TOE SPACE, SEE **5 / A864.2**

K. FOR PENETRATIONS OF FIRE RATED ASSEMBLIES SEE **2 / A870.2** , **5 / A870.2** **7 / A870.2** , **10 / A870.2** , **12 / A870.2** , **13 / A871.2**

TETER, INC.
FRESNO HEADQUARTERS
VISALIA | BAKERSFIELD | MODESTO | SAN LUIS OBISPO
ARCHITECTS ENGINEERS CONNECTED

VISALIA CAMPUS UNIVERSITY CENTER
COLLEGE OF THE SEQUOIAS - INCREMENT 2
915 S. MOONEY BLVD
VISALIA, CALIFORNIA

DRAWING TITLE
FLOOR PLAN - SECOND FLOOR PLAN

PROJECT NO.
22-12498

DRAWING
A220.2

PLOT DATE: 11/10/2025 8:47:09 AM

\\tet-file1\Users\tara.chong_TETR\Documents\12498-A-UC_tara.chong.rvt

MACHINE ROOM REQUIREMENTS:
- 7'-0" CLEAR HEADROOM
- VENTILATED NATURALLY OR MECHANICALLY
- SELF-CLOSING AND SELF-LOCKING DOOR
- ACCESSIBLE TO AUTHORIZED PERSONNEL ONLY
- CONTAIN EQUIPMENT REQUIRED FOR THE OPERATION OF THE ELEVATOR ONLY

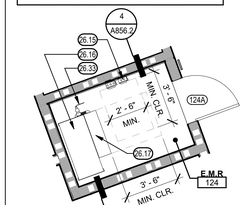

NOTES:
1. LIGHT FIXTURE AND TELEPHONE RECEPTACLE FOR EACH ELEVATOR IN MACHINE ROOM CONNECTED TO CONTROLLER.
2. ACCESS TO THE MACHINE ROOM AND MACHINERY SPACE. (ASME A17.1:2.7.3) RECOMMENDED DOORWAY SIZE FOR POWER UNIT PASSAGE: MIN. 3'-0" x 6'-8".
3. LIGHTING, VENTILATION AND HEATING OF MACHINE ROOM AND MACHINERY SPACE. (ASME A17.1:2.7.5) MACHINE ROOM TEMPERATURE TO BE MAINTAINED BETWEEN 55 & 85 F.
4. PROVIDE A FUSED DISCONNECT SWITCH OR CIRCUIT BREAKER FOR EACH ELEVATOR LOCATED PER NATIONAL ELECTRICAL CODE (NFPA 70:620-51, 620-52) & WIRED TO STARTER SWITCH AT CONTROL PANEL REFER TO EQUIPMENT ROOM LAYOUT FOR LOCATION.
5. 120 VOLT, 15 AMP CIRCUIT TO ELEVATOR MACHINE ROOM FOR LIGHTS AND OUTLETS. (NFPA 70: RULE 620-B5)
6. FOR REMOTE PUMP ROOMS PROVIDE CLEAR ACCESS ABOVE CEILING OR FURNISH TRENCH IN FLOOR FOR OIL LINE & WIRING DUCT FROM PUMP ROOM TO ELEVATOR HATCH.
7. SEPARATE 120 VOLT, 15 AMP CAR-LIGHTING CIRCUIT TO CONTROLLER, DISCONNECT LOCATED PER NATIONAL ELECTRICAL CODE (NFPA 70: RULE 620-51, 620-52, 620-85) REFER TO ELEVATOR EQUIPMENT ROOM ON THIS DRAWING.
8. PROVIDE 8" SQUARE CUTOUT THROUGH WALL FOR OIL LINE AND WIRING DUCT. FOR ACTUAL LOCATION COORDINATE WITH SUPERINTENDENT ON JOB SITE.

PROJECT NORTH

E.M.R. - ENLARGED FLOOR PLAN (ROOM 106 SIM.) 1/4" = 1'-0" 12

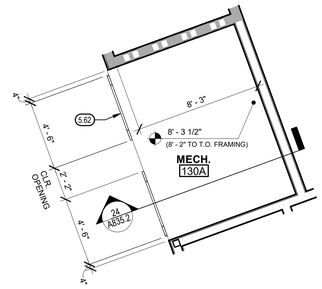

PROJECT NORTH

MECH. PLATFORM - ENLARGED FLOOR PLAN 1/4" = 1'-0" 7

KEYNOTES (0.0)

3.14	CONCRETE CURB AT RESTROOM WALL, SEE **5 / A833.2 & 18 / A833.2**
5.62	GUARDRAIL AT PLATFORM, TYP. SEE ELEVATION **25 / A835.2**
6.22	PLASTIC LAMINATE BASE CABINET, SEE INTERIOR ELEVATIONS
6.23	PLASTIC LAMINATE UPPER CABINET, SEE INTERIOR ELEVATIONS
6.26	PLASTIC LAMINATE COUNTER TOP, SEE INTERIOR ELEVATIONS
8.03	DOOR TO HAVE CLOSER AND PUSH/PULL HARDWARE (NO LATCHING)
9.34	CERAMIC TILE FLOORING. SLOPE FLOOR TO DRAIN MAXIMUM 2%
10.21	TOILET COMPARTMENT/URINAL SCREEN, SEE **4 / A800.2**
10.47	WASTE RECEPTACLE, OFOI
10.91	CORNER GUARD, SEE **10 / A863.2**
22.01	ACCESSIBLE PLUMBING FIXTURE, SEE PLUMBING
22.02	PLUMBING FIXTURE, SEE PLUMBING
22.03	HIGH-LOW DRINKING FOUNTAIN WITH BOTTLE FILLER, SEE PLUMBING, AND **15 / A800.2**
22.16	FLOOR DRAIN 1/2" MAX. OPENINGS, SEE PLUMBING AND **3 / A833.2**
23.05	DUCT, SEE MECHANICAL
26.02	TRANSFORMER, SEE ELECTRICAL
26.05	ELECTRICAL PANEL, SEE ELECTRICAL
26.15	FUSED DISCONNECTS (2) - SEE ELECTRICAL
26.16	POWER UNIT
26.17	MICROPROCESSOR CONTROLLER BOX
26.33	OIL LINE VALVE

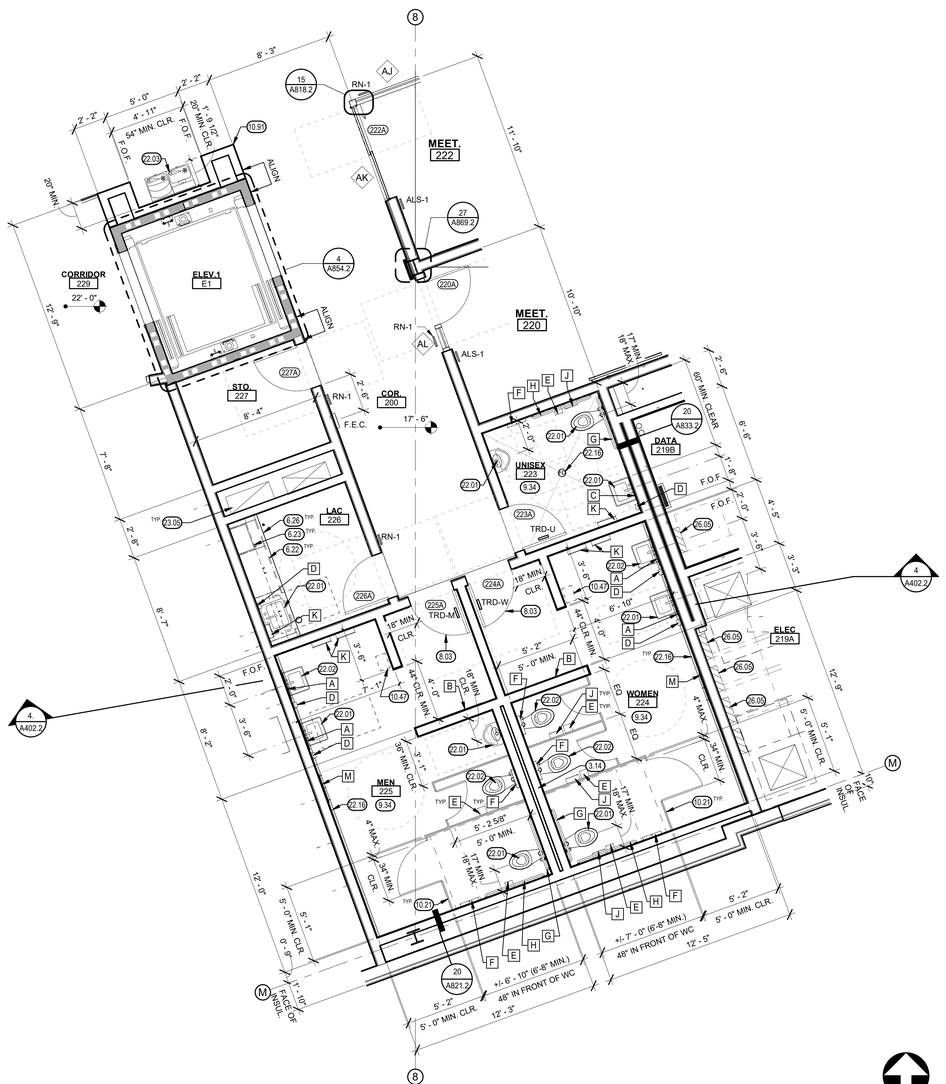

PROJECT NORTH

SECOND FLOOR RESTROOMS - ENLARGED FLOOR PLAN 1/4" = 1'-0" 20



PROJECT NORTH

FIRST FLOOR RESTROOMS - ENLARGED FLOOR PLAN 1/4" = 1'-0" 10

LEGEND

- MINIMUM 30"X48" WHEELCHAIR CLEAR SPACE
- MINIMUM 60" DIAMETER WHEELCHAIR TURN AROUND SPACE
- RN-1 — WALL SIGNAGE, SEE **3 / A801.2**
- TRD-U — DOOR SIGNAGE, SEE **5 / A801.2**
- 201A — DOOR REFERENCE SEE DOOR SCHEDULE ON SHEET A700.2
- XX — WINDOW REFERENCE SEE WINDOW SCHEDULE ON SHEET A701.2, A702.2, A703.2, & A704.2
- F.E.C. — FIRE EXTINGUISHER & CABINET, SEE **26 / A863.2**
- EXX — EQUIPMENT REFERENCE SEE EQUIPMENT SCHEDULE ON SHEET A235.2

WALL LEGEND

- #1 — PARTITION "TYPE" REFERENCE (SEE A001.2)
- PARTITION "DETAIL" REFERENCE (SEE A001.2)
- 1 HR FIRE BARRIER SEPARATION SEE A001.2 FOR PARTITION TYPES. SEE A870.2, A871.2, A872.2 AND A873.2 FOR FIRE RESISTIVE CONSTRUCTION
- SPECIALIZED ACCOUSTIC TREATMENT REQUIRED FOR THESE WALLS. ALL PENETRATIONS OF SERVICES TO BE ACOUSTICALLY ISOLATED. SEE SHEETS A866.2 AND A867.2 FOR ADDITIONAL INFORMATION

TOILET ACCESSORY SCHEDULE

MARK	DESCRIPTION	MFR.	MODEL NO.	REMARKS
A	MIRROR (24" X 36")	BOBRICK	B-165	SURFACE MTD.
B	MIRROR (3'-0" X 5'-0")	BOBRICK	B-165	SURFACE MTD.
C	MIRROR (18" X 30")	BOBRICK	B-165	SURFACE MTD.
D	SOAP DISPENSER	BOBRICK	O.F.C.I.	SURFACE MTD.
E	TOILET TISSUE DISPENSER	BOBRICK	B-2888	SURFACE / PARTITION MTD.
F	TOILET SEAT COVER DISPENSER	BOBRICK	B-4221	SURFACE MTD.
G	GRAB BAR, REAR, SEE **19 / A800.2**	BOBRICK	B-6806 SERIES	42" LONG
H	GRAB BAR, SIDE, SEE **19 / A800.2**	BOBRICK	B-6806 SERIES	48" LONG
J	SANITARY NAPKIN DISPOSAL UNIT	BOBRICK	B-270	SURFACE MTD.
K	PAPER TOWEL DISPENSER	BOBRICK	B-262	SURFACE MTD.
L	DIAPER CHANGING STATION, SEE **17 / A800.2**	KOALA KARE	KB-300	SURFACE MTD.
M	COAT HOOK STRIP	BOBRICK	B-985	SURFACE MTD.

IDENTIFICATION STAMP
DIV. OF THE STATE ARCHITECT
APP: 02-122821 INC: 2
REVIEWED FOR
SS ☑ FLS ☑ ACS ☑
DATE: 11/20/2025

Teter, Inc. expressly reserves its common law copyright and other property rights in these plans. This document, the ideas and designs incorporated herein, as an instrument of professional service, is not to be used in whole or in part, for any other project without prior written authorization.

MARK	DATE	DESCRIPTION
A	11/13/2025	DSA BACKCHECK

LICENSED ARCHITECT ★ REGISTERED PROFESSIONAL ENGINEER ★ STATE OF CALIFORNIA

TETER, INC.
FRESNO HEADQUARTERS
VISALIA | BAKERSFIELD | MODESTO | SAN LUIS OBISPO
ARCHITECTS ENGINEERS CONNECTED

TETER

VISALIA CAMPUS UNIVERSITY CENTER
COLLEGE OF THE SEQUOIAS - INCREMENT 2
915 S. MOONEY BLVD
VISALIA, CALIFORNIA

DRAWING TITLE
ENLARGED FLOOR PLANS - RESTROOMS

PROJECT NO.
22-12498

DRAWING
A230.2

PLOT DATE: 11/10/2025 8:47:27 AM

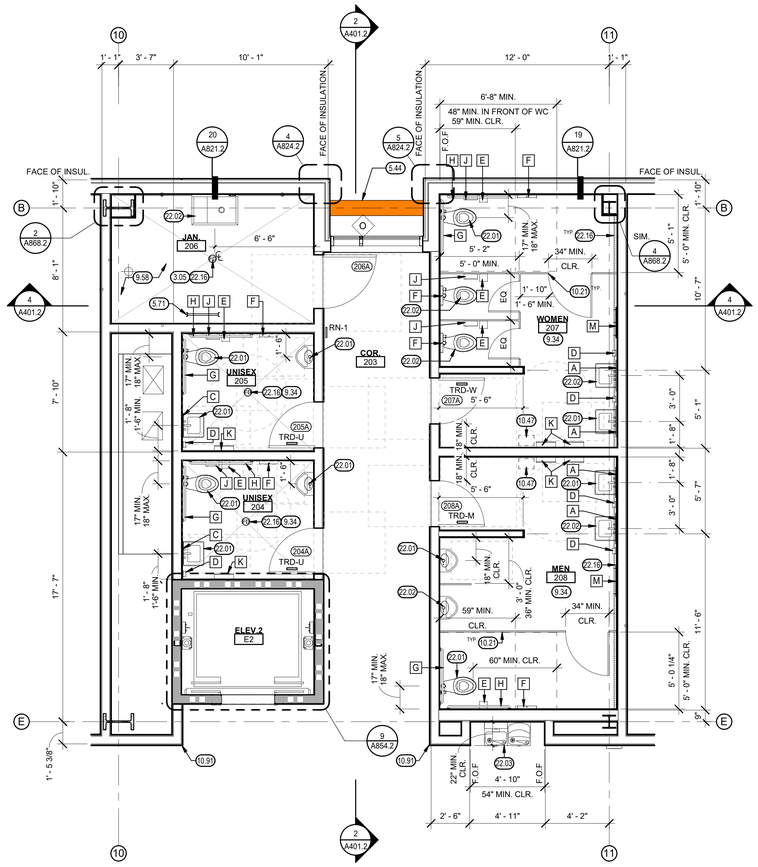

SECOND FLOOR RESTROOMS - ENLARGED FLOOR PLAN 1/4" = 1'-0" 18

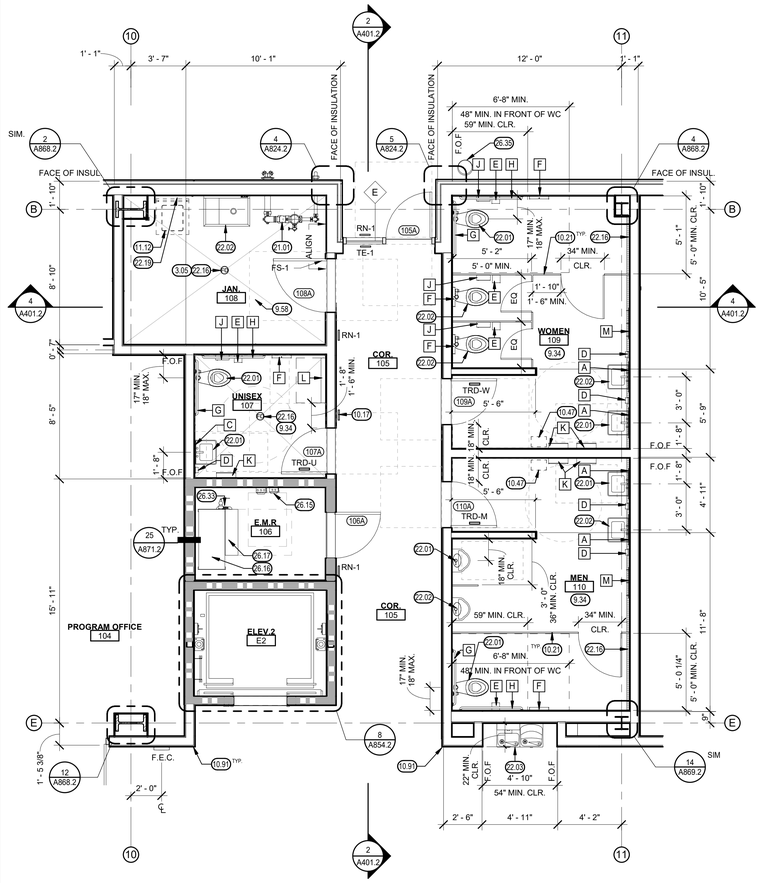

FIRST FLOOR RESTROOMS - ENLARGED FLOOR PLAN 1/4" = 1'-0" 8

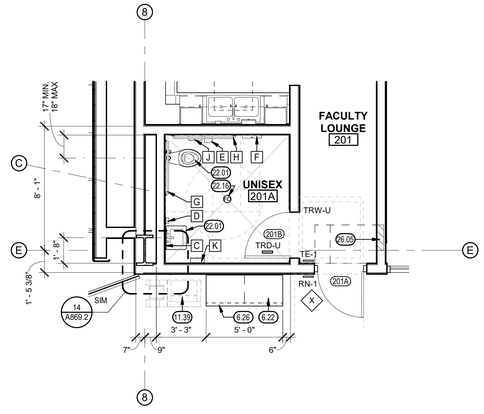

UNISEX 201A - ENLARGED FLOOR PLAN 10

KEYNOTES (00.00)

3.05	SLOPE CONCRETE SLAB TO FLOOR DRAIN, 2% MAXIMUM SLOPE
5.44	BEAM ENCLOSURE, SEE **2 / A827.2**
5.71	LADDER TO ROOF, SEE **23 / A835.2**
6.22	PLASTIC LAMINATE BASE CABINET, SEE INTERIOR ELEVATIONS
6.26	PLASTIC LAMINATE COUNTER TOP, SEE INTERIOR ELEVATIONS
9.34	CERAMIC TILE FLOORING. SLOPE FLOOR TO DRAIN MAXIMUM 2%
9.58	FLOOR TO SLOPE 1/8" PER FOOT TO DRAIN
10.17	DIAPER CHANGING STATION SIGNAGE, SEE **18 / A801.2**
10.21	TOILET COMPARTMENT/URINAL SCREEN, SEE **4 / A800.2**
10.47	WASTE RECEPTACLE, OFOI
10.91	CORNER GUARD, SEE **10 / A863.2**
11.12	WASHING MACHINE, OWNER FURNISHED AND CONTRACTOR INSTALLED
11.39	PRINTER, OFCI
21.01	FIRE SPRINKLER RISER, SEE FIRE PROTECTION
22.01	ACCESSIBLE PLUMBING FIXTURE, SEE PLUMBING
22.02	PLUMBING FIXTURE, SEE PLUMBING
22.03	HIGH-LOW DRINKING FOUNTAIN WITH BOTTLE FILLER, SEE PLUMBING, AND **15 / A800.2**
22.16	FLOOR DRAIN 1/2" MAX. OPENINGS, SEE PLUMBING AND **3 / A833.2**
22.19	WASHING MACHINE BOX, SEE PLUMBING
26.05	ELECTRICAL PANEL, SEE ELECTRICAL
26.15	FUSED DISCONNECTS (2) - SEE ELECTRICAL
26.16	POWER UNIT
26.17	MICROPROCESSOR CONTROLLER BOX
26.33	OIL LINE VALVE
26.35	WAP BOLLARD, SEE ELECTRICAL

LEGEND

- MINIMUM 30"X48" WHEELCHAIR CLEAR SPACE
- MINIMUM 60" DIAMETER WHEELCHAIR TURN AROUND SPACE
- RN-1 — WALL SIGNAGE, SEE **3 / A801.2**
- TRD-U — DOOR SIGNAGE, SEE **5 / A801.2**
- 201A — DOOR REFERENCE SEE DOOR SCHEDULE ON SHEET A700.2
- XX — WINDOW REFERENCE SEE WINDOW SCHEDULE ON SHEET A701.2, A702.2, A703.2, & A704.2
- F.E.C. — FIRE EXTINGUISHER & CABINET, SEE **26 / A863.2**
- EXX — EQUIPMENT REFERENCE SEE EQUIPMENT SCHEDULE ON SHEET A235.2

WALL LEGEND

- # — PARTITION "TYPE" REFERENCE (SEE A001.2)
- PARTITION "DETAIL" REFERENCE (SEE A001.2)
- 1 HR FIRE BARRIER SEPARATION SEE A001.2 FOR PARTITION TYPES. SEE A870.2, A871.2, A872.2 AND A873.2 FOR FIRE RESISTIVE CONSTRUCTION
- SPECIALIZED ACCOUSTIC TREATMENT REQUIRED FOR THESE WALLS. ALL PENETRATIONS OF SERVICES TO BE ACOUSTICALLY ISOLATED. SEE SHEETS A866.2 AND A867.2 FOR ADDITIONAL INFORMATION

TOILET ACCESSORY SCHEDULE

MARK	DESCRIPTION	MFR.	MODEL NO.	REMARKS
A	MIRROR (24" X 36")	BOBRICK	B-165	SURFACE MTD.
B	MIRROR (3'-0" X 5'-0")	BOBRICK	B-165	SURFACE MTD.
C	MIRROR (18" X 30")	BOBRICK	B-165	SURFACE MTD.
D	SOAP DISPENSER	BOBRICK	O.F.C.I.	SURFACE MTD.
E	TOILET TISSUE DISPENSER	BOBRICK	B-2888	SURFACE / PARTITION MTD.
F	TOILET SEAT COVER DISPENSER	BOBRICK	B-4221	SURFACE MTD.
G	GRAB BAR, REAR, SEE **19 / A800.2**	BOBRICK	B-6806 SERIES	42" LONG
H	GRAB BAR, SIDE, SEE **19 / A800.2**	BOBRICK	B-6806 SERIES	48" LONG
J	SANITARY NAPKIN DISPOSAL UNIT	BOBRICK	B-270	SURFACE MTD.
K	PAPER TOWEL DISPENSER	BOBRICK	B-262	SURFACE MTD.
L	DIAPER CHANGING STATION, SEE **17 / A800.2**	KOALA KARE	KB-300	SURFACE MTD.
M	COAT HOOK STRIP	BOBRICK	B-985	SURFACE MTD.

IDENTIFICATION STAMP
DIV. OF THE STATE ARCHITECT
APP: 02-122821 INC: 2
REVIEWED FOR
SS ☑ FLS ☑ ACS ☑
DATE: 11/20/2025

Teter, Inc. expressly reserves its common law copyright and other property rights in these plans. This document, the ideas and designs incorporated herein, as an instrument of professional service, is not to be used in whole or in part, for any other project without prior written authorization.

MARK	DATE	DESCRIPTION
A.	11/13/2025	DSA BACKCHECK

LICENSED ARCHITECT ★ STANDARDIZED ★ CERTIFIED ★ STATE OF CALIFORNIA

TETER, INC.
FRESNO HEADQUARTERS
VISALIA | BAKERSFIELD | MODESTO | SAN LUIS OBISPO
ARCHITECTS ENGINEERS CONNECTED

VISALIA CAMPUS UNIVERSITY CENTER
COLLEGE OF THE SEQUOIAS - INCREMENT 2
915 S. MOONEY BLVD
VISALIA, CALIFORNIA

DRAWING TITLE
ENLARGED FLOOR PLANS - RESTROOMS

PROJECT NO.
22-12498

DRAWING
A231.2

PLOT DATE: 11/10/2025 8:47:41 AM

\\tet-file1\Users\tara.chong_TETR\Documents\12498-A-UC_tara.chong.rvt

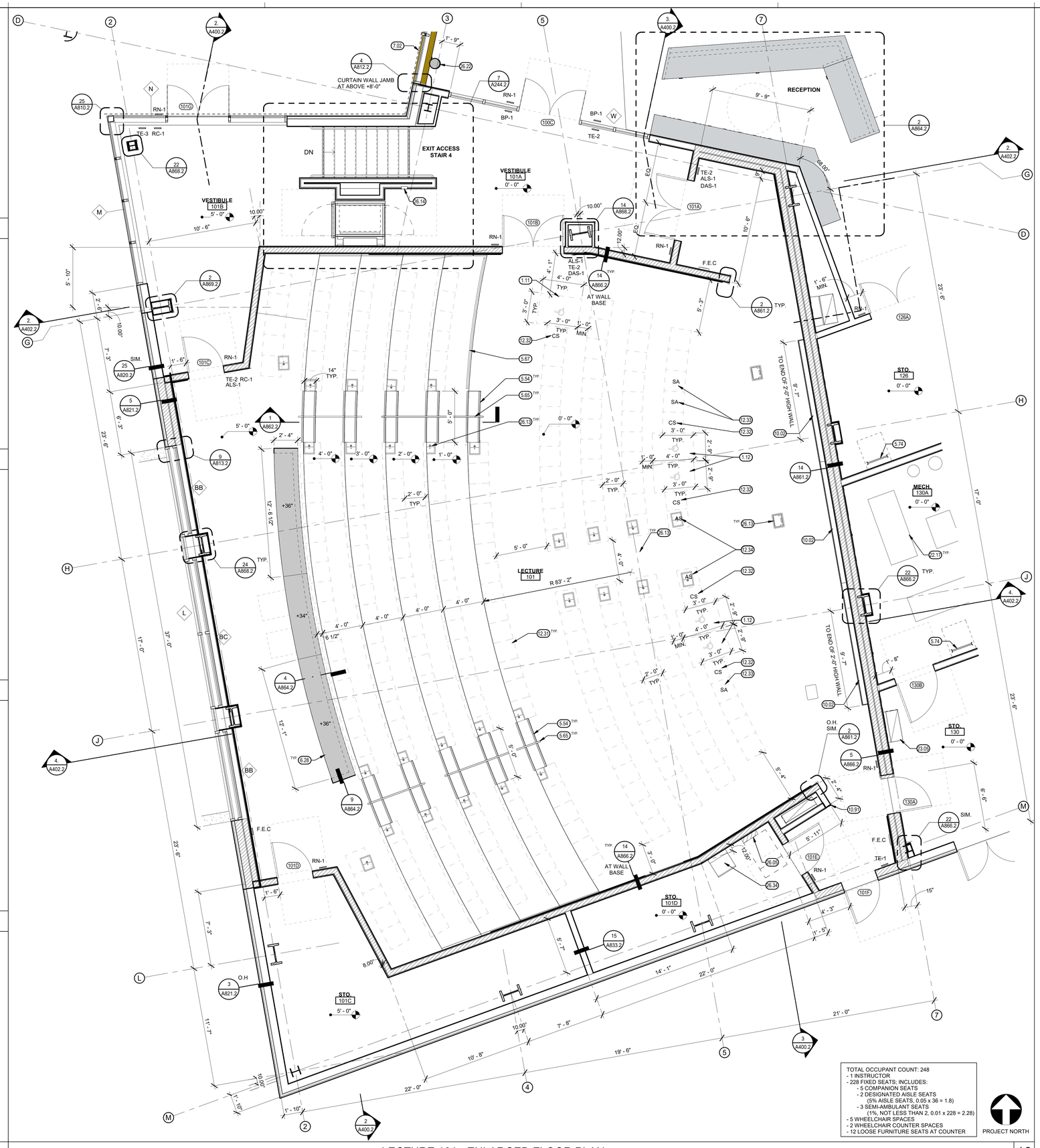

TOTAL OCCUPANT COUNT: 248
- 1 INSTRUCTOR
- 228 FIXED SEATS; INCLUDES:
  - 5 COMPANION SEATS
  - 2 DESIGNATED AISLE SEATS (5% AISLE SEATS, 0.05 x 36 = 1.8)
  - 3 SEMI-AMBULANT SEATS (1%, NOT LESS THAN 2, 0.01 x 228 = 2.28)
- 5 WHEELCHAIR SPACES
- 2 WHEELCHAIR COUNTER SPACES
- 12 LOOSE FURNITURE SEATS AT COUNTER

LECTURE 101 - ENLARGED FLOOR PLAN

1/4" = 1'-0" | 10

KEYNOTES (30.00)

1.11	MIN. 36" x 48" WHEELCHAIR SEATNG SPACE
1.12	MIN. 33" x 48" SIDE BY SIDE WHEELCHAIR SPACES
5.54	NON-SLIP METAL STAIR NOSING WITH CONTRASTING COLOR STRIPE AT EACH STEP, SEE **4 / A852.2**
5.65	DISCONTINUOUS MID-AISLE HANDRAIL, SEE **1 / A862.2**
5.67	EXTENDED LECTURE ROOM GUARDRAIL **6 / A862.2**
5.74	ACCESS LADDER, SEE **21 / A838.2**
6.28	SOLID SURFACE COUNTER TOP
7.02	DRAIN BOARD SYSTEM WITH TIE IN TO STORM DRAIN, SEE CIVIL AND **14 / A821.2**
10.02	VERTICAL SLIDING WHITEBOARD, SEE **14 / A861.2**
10.91	CORNER GUARD, SEE **10 / A863.2**
12.31	FIXED SEATING, OWNER FURNISHED CONTRACTOR INSTALLED, TYP. CHAIR ANCHORAGE SEE **4 / A861.2**
12.32	COMPANION SEAT, FIXED SEATING, OWNER FURNISHED CONTRACTOR INSTALLED, TYP. CHAIR ANCHORAGE SEE **4 / A861.2**
12.33	SEMI-AMBULATORY SEAT, FIXED SEATING, OWNER FURNISHED CONTRACTOR INSTALLED, TYP. CHAIR ANCHORAGE SEE **4 / A861.2**
12.34	DESIGNATED AISLE SEAT WITH RETRACTABLE ARM SEAT, INDICATED BY SIGN WITH THE I.S.A. SYMBOL. OWNER FURNISHED CONTRACTOR INSTALLED, TYP. SEE **18 / A801.2** CHAIR ANCHORAGE SEE **4 / A861.2**
22.17	PLUMBING EQUIPMENT, SEE PLUMBING
23.05	DUCT, SEE MECHANICAL
26.05	ELECTRICAL PANEL, SEE ELECTRICAL
26.13	RECESSED FLOOR BOX FLUSH WITH FLOOR, SEE ELECTRICAL
26.14	WHEELCHAIR LIFT DISCONNECT, SEE ELECTRICAL AND **17 / A853.2**
26.22	WALL MOUNTED LIGHT FIXTURE, SEE ELECTRICAL
26.34	IDF PANEL, SEE ELECTRICAL

LEGEND

- MINIMUM 30"X48" WHEELCHAIR CLEAR SPACE
- MINIMUM 60" DIAMETER WHEELCHAIR TURN AROUND SPACE
- RN-1 — WALL SIGNAGE, SEE **3 / A801.2**
- TRD-U — DOOR SIGNAGE, SEE **5 / A801.2**
- 201A — DOOR REFERENCE SEE DOOR SCHEDULE ON SHEET A700.2
- XX — WINDOW REFERENCE SEE WINDOW SCHEDULE ON SHEET A701.2, A702.2, A703.2, & A704.2
- F.E.C. — FIRE EXTINGUISHER & CABINET, SEE **26 / A863.2**
- EXX — EQUIPMENT REFERENCE SEE EQUIPMENT SCHEDULE ON SHEET A235.2

WALL LEGEND

- # — PARTITION "TYPE" REFERENCE (SEE A001.2)
  PARTITION "DETAIL" REFERENCE (SEE A001.2)
- 1 HR FIRE BARRIER SEPARATION SEE A001.2 FOR PARTITION TYPES. SEE A870.2, A871.2, A872.2 AND A873.2 FOR FIRE RESISTIVE CONSTRUCTION
- SPECIALIZED ACCOUSTIC TREATMENT REQUIRED FOR THESE WALLS. ALL PENETRATIONS OF SERVICES TO BE ACOUSTICALLY ISOLATED. SEE SHEETS A866.2 AND A867.2 FOR ADDITIONAL INFORMATION

GENERAL NOTES

A. FOR TYPICAL ACCESSIBLE TOILET ROOM FIXTURE AND ACCESSORY MOUNTING HEIGHTS AND CLEARANCES, SEE **2 / A800.2** & **3 / A800.2**

B. FOR TYPICAL CASEWORK ANCHORAGE , SEE **22 / A864.2**

C. FIRE EXTINGUISHERS SHALL BE 2A: 10B:C MIN. PER NFPA 10, ONE FOR EVERY 3,000 S.F. OR PORTION THEREOF & TRAVEL DISTANCE NOT TO EXCEED 75'-0".

D. ALL DIMENSIONS WITH "MIN.","CLR.", ARE MEASURED FROM FACE OF WALL FINISH.

E. TYP. INTERIOR WALL FINISH FOR STUD WALLS: 5/8" TYPE 'X' GYP. BD., WATER RESISTANT TYPE IN RESTROOMS WHERE LOCATED WITHIN 2'-0" OF THE FRONT AND/OR SIDES OF PLUMBING FIXT. GYP. BD. APPLICATION SHALL COMPLY W/ CBC SECTION 2508. GYP. BD. SHALL BE FASTENED TO SUPPORTS W/ SCREWS.

F. ACOUSTICAL INSULATION: ALL INTERIOR STUD WALLS OF THE FOLLOWING SPACES INDICATED BELOW SHALL BE INSULATED W/ ACOUSTICAL INSULATION. FOR ACOUSTICAL WALL DETAIL, SEE **11 / A866.2** , **12 / A866.2** , AND **14 / A866.2**

  a. ALL WALLS & CEILING OF: PRIVATE OFFICES PROGRAM OFFICES, FACULTY LOUNGES, ELECTRICAL/ MECH. ROOMS, TOILET ROOMS, CLASSROOMS, LABS, LECTURE & MEETING ROOMS

A. FOR ACCESSIBLE DOOR MANEUVERING CLEARANCES, SEE **18 / A800.2**

B. FOR ACCESSIBLE SINK KNEE/TOE SPACE, SEE **10 / A800.2**

C. FOR ACCESSIBLE WORK COUNTER KNEE/TOE SPACE, SEE **5 / A864.2**

IDENTIFICATION STAMP
DIV. OF THE STATE ARCHITECT
APP: 02-122821 INC: 2
REVIEWED FOR
SS ☑ FLS ☑ ACS ☑
DATE: 11/20/2025

Teter, Inc. expressly reserves its common law copyright and other property rights in these plans. This document, the ideas and designs incorporated herein, as an instrument of professional service, is not to be used in whole or in part, for any other project without prior written authorization.

MARK	DATE	DESCRIPTION
A.	11/13/2025	DSA BACKCHECK

LICENSED ARCHITECT — STATE OF CALIFORNIA — JOHN C. TETER — No. C-17865 — REGISTERED PROFESSIONAL ENGINEER — STRUCTURAL

TETER, INC.
FRESNO HEADQUARTERS
VISALIA | BAKERSFIELD | MODESTO | SAN LUIS OBISPO
ARCHITECTS ENGINEERS CONNECTED

VISALIA CAMPUS UNIVERSITY CENTER
COLLEGE OF THE SEQUOIAS - INCREMENT 2
915 S. MOONEY BLVD
VISALIA, CALIFORNIA

DRAWING TITLE: ENLARGED FLOOR PLANS - LECTURE

PROJECT NO. 22-12498

DRAWING A232.2

\\tet-file1\Users\tara.chong_TETR\Documents\12498-A-UC_tara.chong.rvt
PLOT DATE: 11/10/2025 8:47:54 AM

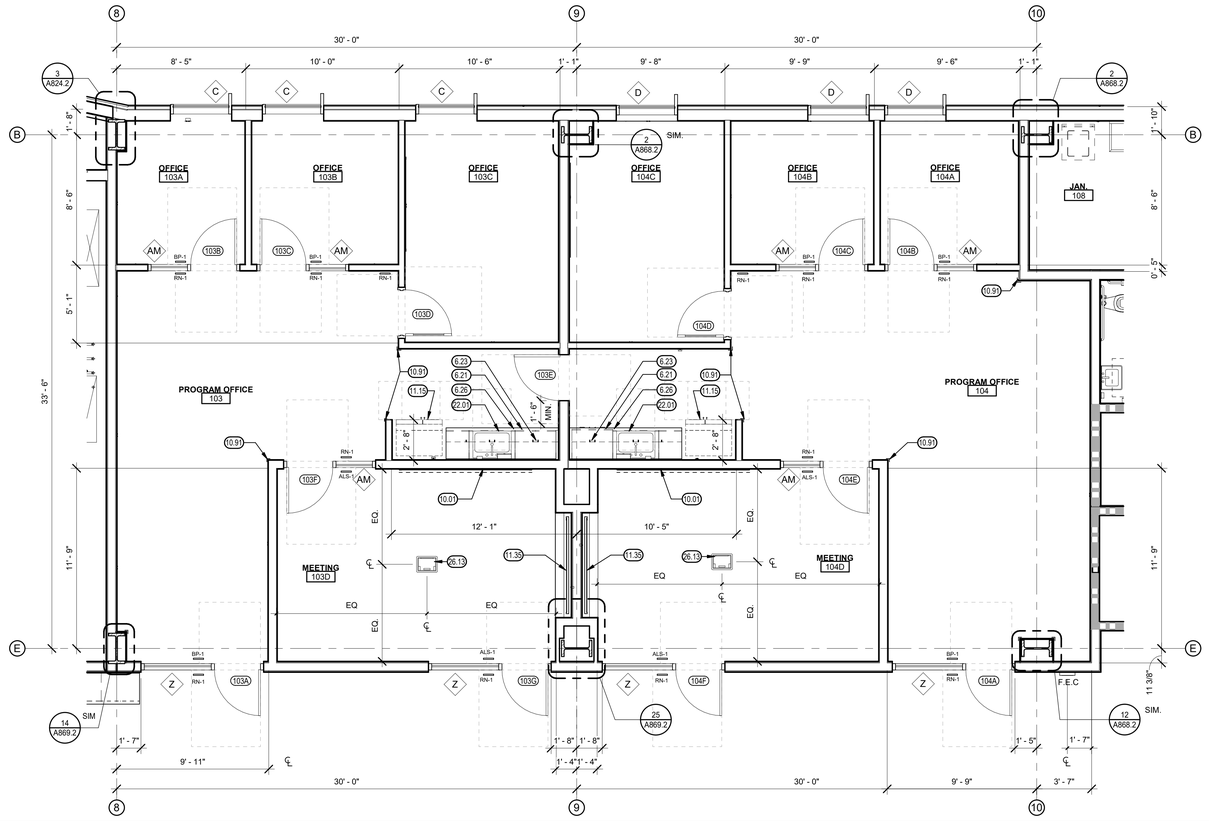

FIRST FLOOR PROGRAM OFFICES - ENLARGED FLOOR PLAN — 1/4" = 1'-0" — 8

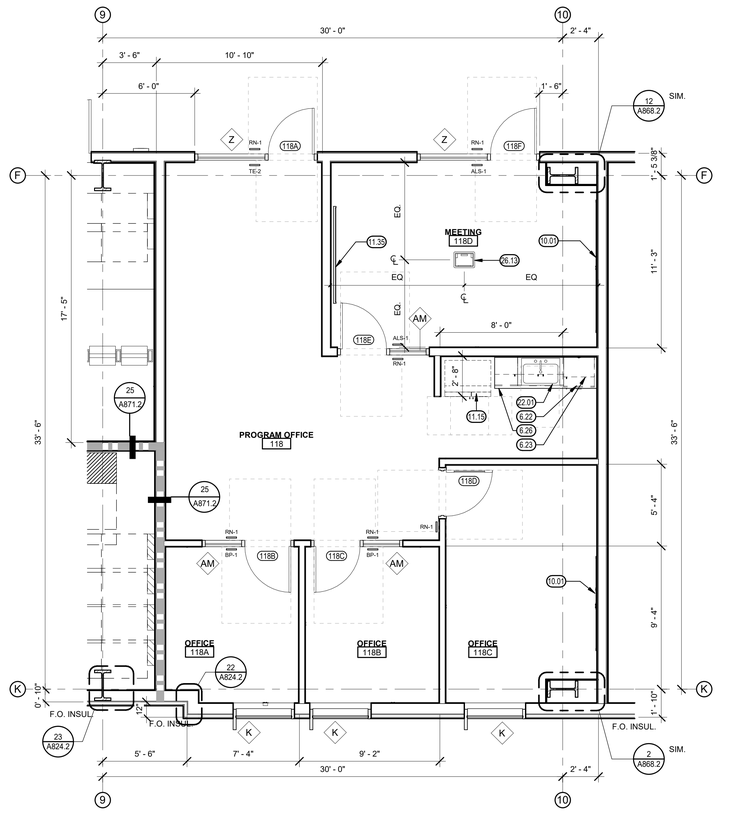

FIRST FLOOR PROGRAM OFFICE - ENLARGED FLOOR PLAN — 1/4" = 1'-0" — 10

KEYNOTES (00.00)

6.21	PLASTIC LAMINATE CASEWORK, SEE INTERIOR ELEVATIONS
6.22	PLASTIC LAMINATE BASE CABINET, SEE INTERIOR ELEVATIONS
6.23	PLASTIC LAMINATE UPPER CABINET, SEE INTERIOR ELEVATIONS
6.26	PLASTIC LAMINATE COUNTER TOP, SEE INTERIOR ELEVATIONS
10.01	MARKER BOARD, SEE **20 / A863.2**
10.91	CORNER GUARD, SEE **10 / A863.2**
11.15	REFRIGERATOR/FREEZER O.F.C.I. AT LEAST 50% OF FREEZER SPACE 54" MAX. A.F.F.
11.35	MONITOR BRACKET OFCI, WALL MOUNTED, SEE **10 / A864.2**
22.01	ACCESSIBLE PLUMBING FIXTURE, SEE PLUMBING
26.13	RECESSED FLOOR BOX FLUSH WITH FLOOR, SEE ELECTRICAL

LEGEND

- MINIMUM 30"X48" WHEELCHAIR CLEAR SPACE
- MINIMUM 60" DIAMETER WHEELCHAIR TURN AROUND SPACE
- RN-1 — WALL SIGNAGE, SEE **3 / A801.2**
- TRD-U — DOOR SIGNAGE, SEE **5 / A801.2**
- 201A — DOOR REFERENCE SEE DOOR SCHEDULE ON SHEET A700.2
- XX — WINDOW REFERENCE SEE WINDOW SCHEDULE ON SHEET A701.2, A702.2, A703.2, & A704.2
- F.E.C. — FIRE EXTINGUISHER & CABINET, SEE **26 / A863.2**
- EXX — EQUIPMENT REFERENCE SEE EQUIPMENT SCHEDULE ON SHEET A235.2

WALL LEGEND

- # — PARTITION "TYPE" REFERENCE (SEE A001.2); PARTITION "DETAIL" REFERENCE (SEE A001.2)
- 1 HR FIRE BARRIER SEPARATION SEE A001.2 FOR PARTITION TYPES. SEE A870.2, A871.2, A872.2 AND A873.2 FOR FIRE RESISTIVE CONSTRUCTION
- SPECIALIZED ACCOUSTIC TREATMENT REQUIRED FOR THESE WALLS. ALL PENETRATIONS OF SERVICES TO BE ACOUSTICALLY ISOLATED. SEE SHEETS A866.2 AND A867.2 FOR ADDITIONAL INFORMATION

GENERAL NOTES

A. FOR TYPICAL ACCESSIBLE TOILET ROOM FIXTURE AND ACCESSORY MOUNTING HEIGHTS AND CLEARANCES, SEE **2 / A800.2** & **3 / A800.2**

B. FOR TYPICAL CASEWORK ANCHORAGE , SEE **22 / A864.2**

C. FIRE EXTINGUISHERS SHALL BE 2A: 10B:C MIN. PER NFPA 10, ONE FOR EVERY 3,000 S.F. OR PORTION THEREOF & TRAVEL DISTANCE NOT TO EXCEED 75'-0".

D. ALL DIMENSIONS WITH "MIN.","CLR.", ARE MEASURED FROM FACE OF WALL FINISH.

E. TYP. INTERIOR WALL FINISH FOR STUD WALLS: 5/8" TYPE 'X' GYP. BD., WATER RESISTANT TYPE IN RESTROOMS WHERE LOCATED WITHIN 2'-0" OF THE FRONT AND/OR SIDES OF PLUMBING FIXT. GYP. BD. APPLICATION SHALL COMPLY W/ CBC SECTION 2508. GYP. BD. SHALL BE FASTENED TO SUPPORTS W/ SCREWS.

F. ACOUSTICAL INSULATION: ALL INTERIOR STUD WALLS OF THE FOLLOWING SPACES INDICATED BELOW SHALL BE INSULATED W/ ACOUSTICAL INSULATION. FOR ACOUSTICAL WALL DETAIL, SEE **11 / A866.2** , **12 / A866.2** , AND **14 / A866.2**

   a. ALL WALLS & CEILING OF: PRIVATE OFFICES PROGRAM OFFICES, FACULTY LOUNGES, ELECTRICAL/ MECH. ROOMS, TOILET ROOMS, CLASSROOMS, LABS, LECTURE & MEETING ROOMS

A. FOR ACCESSIBLE DOOR MANEUVERING CLEARANCES, SEE **18 / A800.2**

B. FOR ACCESSIBLE SINK KNEE/TOE SPACE, SEE **10 / A800.2**

C. FOR ACCESSIBLE WORK COUNTER KNEE/TOE SPACE, SEE **5 / A864.2**

IDENTIFICATION STAMP
DIV. OF THE STATE ARCHITECT
APP: 02-122821 INC: 2
REVIEWED FOR
SS ☑ FLS ☑ ACS ☑
DATE: 11/20/2025

Teter, Inc. expressly reserves its common law copyright and other property rights in these plans. This document, the ideas and designs incorporated herein, as an instrument of professional service, is not to be used in whole or in part, for any other project without prior written authorization.

MARK	DATE	DESCRIPTION
A.	11/13/2025	DSA BACKCHECK

LICENSED ARCHITECT ★ STATE OF CALIFORNIA ★ CHRISTOPHER J. CONNELL ★ C-29421 ★ REGISTERED PROFESSIONAL ENGINEER

TETER, INC.
FRESNO HEADQUARTERS
VISALIA | BAKERSFIELD | MODESTO | SAN LUIS OBISPO
ARCHITECTS ENGINEERS CONNECTED

VISALIA CAMPUS UNIVERSITY CENTER
COLLEGE OF THE SEQUOIAS - INCREMENT 2
915 S. MOONEY BLVD
VISALIA, CALIFORNIA

DRAWING TITLE
ENLARGED FLOOR PLANS - PROGRAM OFFICES

PROJECT NO.
22-12498

DRAWING
A233.2

\\tet-file1\Users\tara.chong_TETR\Documents\12498-A-UC_tara.chong.rvt

PLOT DATE: 11/10/2025 8:48:06 AM

\\tet-file1\Users\tara.chong_TETR\Documents\12498-A-UC_tara.chong.rvt

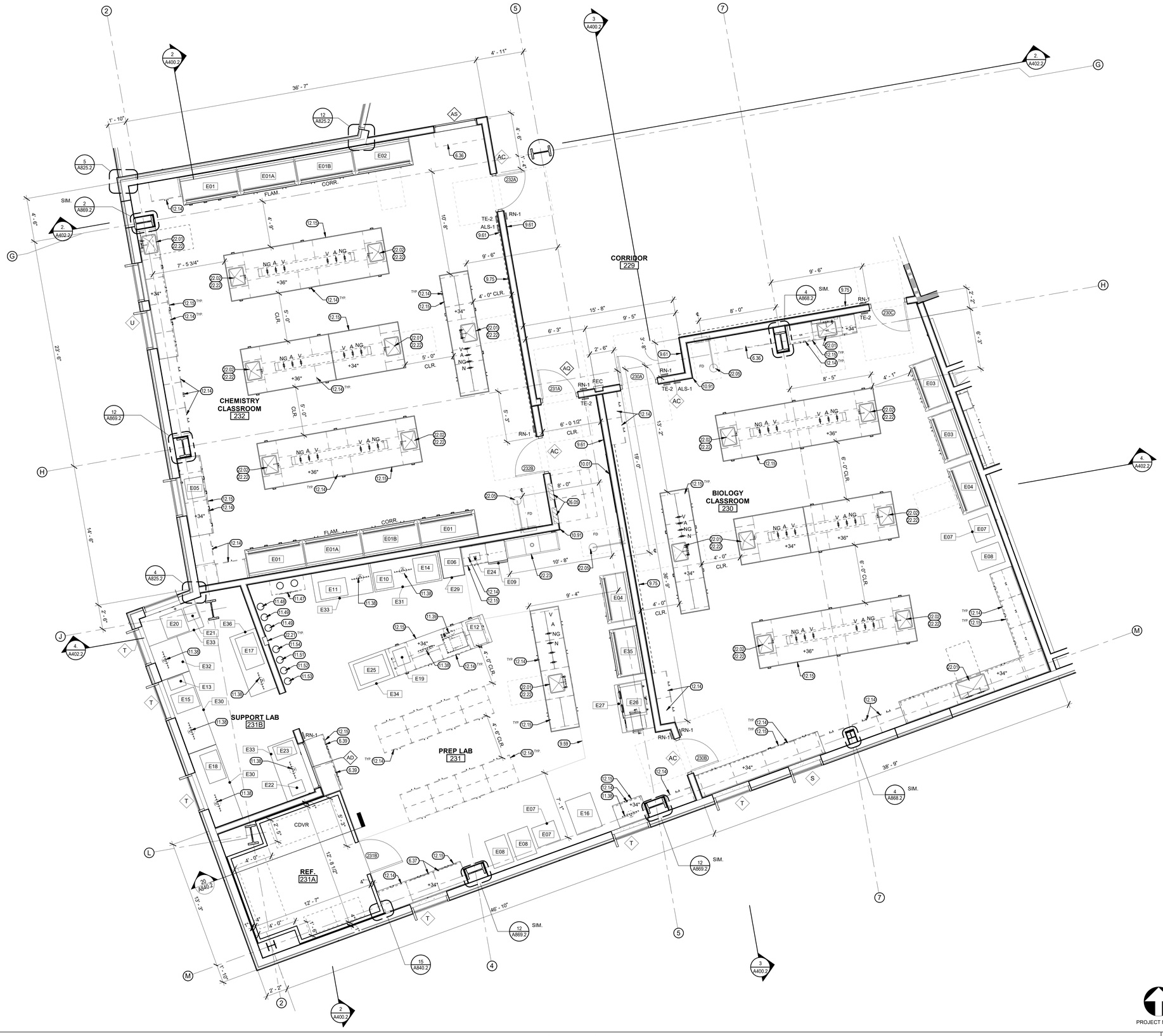

KEYNOTES

6.36	PLASTIC LAMINATE STORAGE CABINET, SEE INTERIOR ELEVATIONS
6.37	UNDERCOUNTER FLAMMABLE STORAGE, SEE **21 / A953.2**
6.39	UNDERCOUNTER CORROSIVE STORAGE WITH VENTILATION, SEE **14 / A953.2**
9.59	STRIPING PAINT, SEE FLOOR FINISH PLAN
9.61	VINYL COVERED TACKABLE WALL PANELS
9.75	DRY ERASE WALL COVERING
10.01	MARKER BOARD, SEE **20 / A863.2**
10.91	CORNER GUARD, SEE **10 / A863.2**
11.38	COMPUTER, OFCI
11.39	PRINTER, OFCI
11.47	ACETYLENE AND HYDROGEN GAS CYLINDER FLAMMABLE STORAGE CABINET WITH VENTILATION
11.48	P5 GAS CYLINDER STORAGE, PROVIDE RESTRAINT PER **14 / A954.2**
11.49	NITROGEN GAS CYLINDER STORAGE, PROVIDE RESTRAINT PER **14 / A954.2**
11.51	ARGON GAS CYLINDER STORAGE, PROVIDE RESTRAINT PER **14 / A954.2**
11.52	NITROUS OXIDE GAS CYLINDER STORAGE, PROVIDE RESTRAINT PER **14 / A954.2**
11.53	H2 INERT GAS MIXTURE GAS CYLINDER STORAGE, PROVIDE RESTRAIN PER **14 / A954.2**
11.54	HELIUM GAS CYLINDER STORAGE, PROVIDE RESTRAINT PER **14 / A954.2**
12.14	LABORATORY CASEWORK, SEE A952.2
12.15	EPOXY RESIN COUNTER TOP
22.01	ACCESSIBLE PLUMBING FIXTURE, SEE PLUMBING
22.02	PLUMBING FIXTURE, SEE PLUMBING
22.05	EMERGENCY EYE WASH/SHOWER, SEE PLUMBING AND **5 / A951.2**
22.21	GAS MANIFOLD, SEE PLUMBING
22.22	EPOXY DROP IN SINK, SEE **5 / A954.2**
22.23	SCULLERY SINK, SEE PLUMBING AND **2 / A954.2**
26.05	ELECTRICAL PANEL, SEE ELECTRICAL

LEGEND

- MINIMUM 30"X48" WHEELCHAIR CLEAR SPACE
- MINIMUM 60" DIAMETER WHEELCHAIR TURN AROUND SPACE
- RN-1 WALL SIGNAGE, SEE **3 / A801.2**
- TRD-U DOOR SIGNAGE, SEE **5 / A801.2**
- 201A DOOR REFERENCE SEE DOOR SCHEDULE ON SHEET A700.2
- XX WINDOW REFERENCE SEE WINDOW SCHEDULE ON SHEET A701.2, A702.2, A703.2, & A704.2
- F.E.C. FIRE EXTINGUISHER & CABINET, SEE **26 / A863.2**
- EXX EQUIPMENT REFERENCE SEE EQUIPMENT SCHEDULE ON SHEET A235.2

WALL LEGEND

- # PARTITION "TYPE" REFERENCE (SEE A001.2)
- # PARTITION "DETAIL" REFERENCE (SEE A001.2)
- 1 HR FIRE BARRIER SEPARATION SEE A001.2 FOR PARTITION TYPES. SEE A870.2, A871.2, A872.2 AND A873.2 FOR FIRE RESISTIVE CONSTRUCTION
- SPECIALIZED ACCOUSTIC TREATMENT REQUIRED FOR THESE WALLS. ALL PENETRATIONS OF SERVICES TO BE ACOUSTICALLY ISOLATED. SEE SHEETS A866.2 AND A867.2 FOR ADDITIONAL INFORMATION

GENERAL NOTES

A. FOR TYPICAL ACCESSIBLE TOILET ROOM FIXTURE AND ACCESSORY MOUNTING HEIGHTS AND CLEARANCES, SEE **2 / A800.2** & **3 / A800.2**

B. FOR TYPICAL CASEWORK ANCHORAGE , SEE **22 / A864.2**

C. FIRE EXTINGUISHERS SHALL BE 2A: 10B:C MIN. PER NFPA 10, ONE FOR EVERY 3,000 S.F. OR PORTION THEREOF & TRAVEL DISTANCE NOT TO EXCEED 75'-0".

D. ALL DIMENSIONS WITH "MIN.","CLR.", ARE MEASURED FROM FACE OF WALL FINISH.

E. TYP. INTERIOR WALL FINISH FOR STUD WALLS: 5/8" TYPE 'X' GYP. BD., WATER RESISTANT TYPE IN RESTROOMS WHERE LOCATED WITHIN 2'-0" OF THE FRONT AND/OR SIDES OF PLUMBING FIXT. GYP. BD. APPLICATION SHALL COMPLY W/ CBC SECTION 2508. GYP. BD. SHALL BE FASTENED TO SUPPORTS W/ SCREWS.

F. ACOUSTICAL INSULATION: ALL INTERIOR STUD WALLS OF THE FOLLOWING SPACES INDICATED BELOW SHALL BE INSULATED W/ ACOUSTICAL INSULATION. FOR ACOUSTICAL WALL DETAIL, SEE **11 / A866.2** , **12 / A866.2** , AND **14 / A866.2**

   a. ALL WALLS & CEILING OF: PRIVATE OFFICES PROGRAM OFFICES, FACULTY LOUNGES, ELECTRICAL/ MECH. ROOMS, TOILET ROOMS, CLASSROOMS, LABS, LECTURE & MEETING ROOMS

A. FOR ACCESSIBLE DOOR MANEUVERING CLEARANCES, SEE **18 / A800.2**

B. FOR ACCESSIBLE SINK KNEE/TOE SPACE, SEE **10 / A800.2**

C. FOR ACCESSIBLE WORK COUNTER KNEE/TOE SPACE, SEE **5 / A864.2**

IDENTIFICATION STAMP
DIV. OF THE STATE ARCHITECT
APP: 02-122821 INC: 2
REVIEWED FOR
SS ☑ FLS ☑ ACS ☑
DATE: 11/20/2025

Teter, Inc. expressly reserves its common law copyright and other property rights in these plans. This document, the ideas and designs incorporated herein, as an instrument of professional service, is not to be used in whole or in part, for any other project without prior written authorization.

MARK	DATE	DESCRIPTION
A.	11/13/2025	DSA BACKCHECK

LICENSED ARCHITECT REGISTERED PROFESSIONAL ENGINEER STATE OF CALIFORNIA

TETER, INC.
ARCHITECTS ENGINEERS CONNECTED
FRESNO HEADQUARTERS
VISALIA | BAKERSFIELD | MODESTO | SAN LUIS OBISPO

VISALIA CAMPUS UNIVERSITY CENTER
COLLEGE OF THE SEQUOIAS - INCREMENT 2
915 S. MOONEY BLVD
VISALIA, CALIFORNIA

DRAWING TITLE
ENLARGED FLOOR PLAN - LABORATORIES

PROJECT NO.
22-12498

DRAWING
A234.2

\\tet-file1\Users\tara.chong_TETR\Documents\12498-A-UC_tara.chong.rvt

CHEMISTRY LAB 232

TYPE MARK	QUANTITY	ITEM	MANUFACTURER	MODEL	ACCESSORIES	REMARKS	WEIGHT (LBS)	HEIGHT (FT-IN)	BY	ANCHORAGE	MECHANICAL/PLUMBING					ELECTRICAL				
											WATER	GAS	WASTE	EXHAUST	REMARKS	VOLTS	KW	AMPS	PHASE	REMARKS E
E01	3	FUME HOOD	KEWAUNEE	H05G5472B00 FHLVW	019243-72R, 020452-72,0656-1V-I, 0695-1S-1, F-4803-00, G08W362230-5004		660	9' - 2"	CFCI	22 / A953.2	W-0864-3WV-I (WATER VALVE)	W-0860-3A-1 (AIR), W-0860-3G-I (GAS), W-0860-3N-I (NITROGEN), W-0860-3V-I (VACUUM)	--	2B-2818-6G-M (CANOPY HOOD)	PRE-PIPED	120	--	5	1	HARDWIRED 20A, 120V
E01A	2	FUME HOOD	KEWAUNEE	H05G5472B00 FHLVW	019243-72R, 020452-72,0656-1V-I, 0695-1S-1, F-4803-00, G68W362236-5004		660	9' - 2"	CFCI	22 / A953.2	W-0864-3WV-I (WATER VALVE)	W-0860-3A-1 (AIR), W-0860-3G-I (GAS), W-0860-3N-I (NITROGEN), W-0860-3V-I (VACUUM)	--	2B-2818-6G-M (CANOPY HOOD)	PRE-PIPED	120	--	5	1	HARDWIRED 20A, 120V
E01B	2	FUME HOOD	KEWAUNEE	H05G5472B00 FHLVW	019243-72R, 020452-72,0656-1V-I, 0695-1S-1, F-4803-00, G80W362236-5004		660	9' - 2"	CFCI	22 / A953.2	W-0864-3WV-I (WATER VALVE)	W-0860-3A-1 (AIR), W-0860-3G-I (GAS), W-0860-3N-I (NITROGEN), W-0860-3V-I (VACUUM)	--	2B-2818-6G-M (CANOPY HOOD)	PRE-PIPED	120	--	5	1	HARDWIRED 20A, 120V
E02	1	FUME HOOD, ACCESSIBLE	KEWAUNEE	H08G5472B00 FHLVW	019243-72R, 020452-72,0656-1V-I, 0695-1S-1, F-4803-00, G08W342218L5004, G08W342218-5004,	ACCESSIBLE BENCH FUME HOOD	660	8' - 9"	CFCI	22 / A953.2	W-0864-3WV-I (WATER VALVE)	W-0860-3A-1 (AIR), W-0860-3G-I (GAS), W-0860-3N-I (NITROGEN), W-0860-3V-I (VACUUM)	--	2B-2818-6G-M (CANOPY HOOD)	PRE-PIPED	120	--	5	1	HARDWIRED 20A, 120V
E05	1	COUNTERTOP OVEN	THERMO SCIENTIFIC	OGH100			121	2' - 9 3/4"	OFCI		--	--	--	--	--	208	3.36	14	1	NEMA 6-20P

BIOLOGY LAB 230

TYPE MARK	QUANTITY	ITEM	MANUFACTURER	MODEL	ACCESSORIES	REMARKS	WEIGHT (LBS)	HEIGHT (FT-IN)	BY	ANCHORAGE	MECHANICAL/PLUMBING					ELECTRICAL				
											WATER	GAS	WASTE	EXHAUST	REMARKS	VOLTS	KW	AMPS	PHASE	REMARKS E
E03	2	LAMINAR FLOW HOOD	PURAIR FLOR	VLF-60	TRAY-VLF-60-SDW, SF-WALL, IV-VLF-60, ION-60, UV-60, FCOVER-VLF-60		401	3' - 11 1/4"	CFCI	23 / A953.2	FITTING REQUIRED	NITROGEN, AIR, VACUUM	--	--		120	--	10	1	NEMA 5-15P
E04	1	LAMINAR FLOW HOOD, ACCESSIBLE	PURAIR FLOR	VLF-60	TRAY-VLF-60-SDW, SF-WALL, IV-VLF-60, ION-60, UV-60, FCOVER-VLF-60	ACCESSIBLE BENCH LAMINAR HOOD	401	3' - 11 1/4"	CFCI	23 / A953.2	FITTING REQUIRED	NITROGEN, AIR, VACUUM	--	--		120	--	10	1	NEMA 5-15P
E07	2	INCUBATOR	THERMO FISHER SCIENTIFIC	IMP400			143	3' - 0 1/4"	OFCI		--	--	--	--	--	120	--	6	1	NEMA 5-15P
E08	1	SCIENTIFIC REFRIGERATOR/FREEZER	THERMO FISHER SCIENTIFIC	MC20SS-SAEE-TS			420	6' - 10"	OFCI	5 / A953.2	--	--	--	--	--	115	--	12.3	--	NEMA 5-15P (x2)

PREP LAB 231

TYPE MARK	QUANTITY	ITEM	MANUFACTURER	MODEL	ACCESSORIES	REMARKS	WEIGHT (LBS)	HEIGHT (FT-IN)	BY	ANCHORAGE	MECHANICAL/PLUMBING					ELECTRICAL				
											WATER	GAS	WASTE	EXHAUST	REMARKS	VOLTS	KW	AMPS	PHASE	REMARKS E
E04	1	LAMINAR FLOW HOOD	PURAIR FLOR	VLF-60	TRAY-VLF-60-SDW, SF-WALL, IV-VLF-60, ION-60, UV-60, FCOVER-VLF-60	ACCESSIBLE BENCH LAMINAR HOOD	401	3' - 11 1/4"	CFCI	23 / A953.2	FITTING REQUIRED	NITROGEN, AIR, VACUUM	--	--	--	120	--	10	1	NEMA 5-15P
E06	1	AUTOCLAVE	HEIDOLPH TUTTNAUER	3870M			225	1' - 0 1/8"	OFCI		--	--	--	--	--	230	2.7	--	1	NEMA 6-15 THROUGH 208V:230V BOOST TRANSFORMER
E07	2	INCUBATOR	FISHER SCIENTIFIC	150152645			143	3' - 0 1/4"	OFCI		--	--	--	--	--	120	0.72	6	1	NEMA 5-15P
E08	2	SCIENTIFIC REFRIGERATOR/FREEZER	THERMO FISHER SCIENTIFIC	MC20SS-SAEE-TS			420	6' - 10 1/4"	OFCI	5 / A953.2	--	--	--	--	--	115	--	12.3	1	NEMA 5-15P (x2)
E09	1	UNDERCOUNTER DISHWASHER	LABCONCO	411001000			202	2' - 8 1/8"	CFCI		RO	--	--	--	--	115	--	16	1	NEMA 5-20P
E10	1	NICOLET APEX FTIR SPECTROMETER	THERMO FISHER SCIENTIFIC	912A1249		ANTI-VIBRATION TABLE REQUIRED	77	1' - 0 1/2"	OFCI		--	NITROGEN	--	--	--	120	--	2.5	1	NEMA 5-15P
E11	1	GAS CHROMATOGRAPHY/MASS SPECTROMETRY	AGILENT	5977C GC/MSD		ANTI-VIBRATION TABLE REQUIRED	275	2' - 10"	OFCI		--	HELIUM	--	FORELINE PUMP EXHAUST VENT	FOR GAS PURITY REQUIREMENTS REFER TO MFR.	120	--	9.1	1	NEMA 5-15P
E12	1	BENCHTOP NMR	NANALYSIS	100e			243	1' - 3 1/4"	OFOI		--	--	--	--	--	120	--	--	1	NEMA 5-15P
E14	1	ICP-MS MASS SPECTROMETER	THERMO FISHER SCIENTIFIC	iCAPRQ ICP-MS BRE731416		ANTI-VIBRATION TABLE REQUIRED	0	3' - 7 3/8"	OFCI		COOLING WATER SUPPLY WITH MIXING VALVE	ARGON, CELL GAS (HYDROGEN)	--	PLASMA & HEAT EXHAUST	FOR GAS PURITY REQUIREMENTS REFER TO MFR.	208	2.2	--	1	NEMA 6-20P
E16	1	ZETIUM XRF SPECTROMETER	MALVERN PANALYTICAL	943005400241		PROVIDE PRE-INSTALLATION KIT	1322.77	4' - 11 1/2"	OFCI	5 / A953.2	COOLING WATER SUPPLY WITH MIXING VALVE	HELIUM, NITROGEN, COMPRESSED AIR, P5	REQUIRED	GAS EXHAUST KIT	FOR GAS PURITY REQUIREMENTS REFER TO MFR.	220	--	24	1	HARDWIRED THROUGH LOCKABLE DISCONNECT AND 208V:220V BOOST TRANSFORMER
E19	1	FLUORESCENCE AND ABSORBANCE SPECTROMETER	HORIBA SCIENTIFIC	5700007000			45	1' - 3 1/2"	OFCI		--	--	--	--	--	120	--	2	1	NEMA 5-15P
E24	1	ULTRASONIC BATH	HEIDOLPH TUTTNAUER	CSU1H			0	0' - 9 7/8"	OFCI		--	--	--	--	--	115		1.1	1	NEMA 5-15P
E25	1	CT SCANNER	RIGAKU	HX130			617	1' - 10 7/8"	OFCI	15 / A953.2	--	--	--	--	--	120	--	15	1	NEMA 5-15P
E26	1	ANAEROBIC CHAMBER	LABCONCO	5060010	ATMOSPURE RE-GEN GAS PURIFIER		500	3' - 9 3/4"	OFCI	10 / A953.2	--	NITROGEN, H2 INERT GAS MIXTURE	--	--	--	115	--	10	1	NEMA 5-15P
E27	1	ADJUSTABLE MOBILE BASE STAND	LABCONCO	5235500			225		OFCI		--	--	--	--	--	--	--	--	--	--
E29	1	AUTOCLAVE STAND	TUTTNAUER	STAND-3				2' - 10"			--	--	--	--	--	--	--	--	--	--
E31	1	ADJUSTABLE ANTI-VIBRATION TABLE (36"x84")	ONEPOINTE SOLUTIONS	CUSTOM					OFCI		--	--	--	--	--	--	--	--	--	--
E33	1	ADJUSTABLE ANTI-VIBRATION TABLE (36"x72")	ONEPOINTE SOLUTIONS	CUSTOM					OFCI		--	--	--	--	--	--	--	--	--	--
E34	1	ADJUSTABLE STAINLESS STEEL TABLE (36"x48")	ONEPOINTE SOLUTIONS	CUSTOM		ANCHOR FEET KIT			OFCI	25 / A953.2	--	--	--	--	--	--	--	--	--	--
E35	1	FUME HOOD	KEWAUNEE	H08G5460B00 FHLVW	020126-60R, 020452-60, 0656-1V-I, 0695-1S-I, F-4803-00, G08W342212L5004, G08W342212-5004,	ACCESSIBLE BENCH FUME HOOD	660	8' - 9"	CFCI	22 / A953.2	W-0864-3WV-I (WATER VALVE)	W-0860-3A-1 (AIR), W-0860-3G-I (GAS), W-0860-3N-I (NITROGEN), W-0860-3V-I (VACUUM)		2B-2818-6G-M (CANOPY HOOD)	PRE-PIPED	120	--	5	1	HARDWIRED 20A, 120V

SUPPORT LAB 231B

TYPE MARK	QUANTITY	ITEM	MANUFACTURER	MODEL	ACCESSORIES	REMARKS	WEIGHT (LBS)	HEIGHT (FT-IN)	BY	ANCHORAGE	MECHANICAL/PLUMBING					ELECTRICAL				
											WATER	GAS	WASTE	EXHAUST	REMARKS	VOLTS	KW	AMPS	PHASE	REMARKS E
E13	1	CAPILLARY ELECTROPHORESIS	AGILENT	G7100A		ANTI-VIBRATION TABLE REQUIRED	77.2	1' - 11 1/4"	OFCI		--	NITROGEN	--	--	FOR GAS PURITY REQUIREMENTS REFER TO MFR.	120	0.3	--	1	NEMA 5-15P
E15	1	ICP-OES SPECTROMETER	AGILENT	5800		ANTI-VIBRATION TABLE REQUIRED	198.4	2' - 11"	OFCI		AGILENT CHILLER (G3291-80012)	ARGON, NITROGEN	--	ICP-OES EXHAUST & SPS4 COVER KIT EXHAUST	FOR GAS PURITY REQUIREMENTS REFER TO MFR.	208	--	15	1	NEMA 6-15P
E17	1	GRAPHITE FURNACE ATOMIC ABSORPTION INSTRUMENT	AGILENT	240Z AA		ANTI-VIBRATION TABLE REQUIRED	238	1' - 11"	OFCI		AGILENT CHILLER (G8481A)	AIR, NITROUS OXIDE, ACETYLENE, ARGON, NITROGEN	WASTE VESSEL	HIGH TEMPERATURE EXHAUST FAN & HOOD	FOR GAS PURITY REQUIREMENTS REFER TO MFR.	208	--	--	1	NEMA 6-15P
E18	1	RAMAN SPECTROMETER	THERMO FISHER SCIENTIFIC	DXR3		ANTI-VIBRATION TABLE REQUIRED	116.4	1' - 5"	OFCI		--	--	--	--	--	120		1.6	1	NEMA 5-15P
E20	1	ACCURATE MASS TOF LC/MS	AGILENT	G6230B		ANTI-VIBRATION TABLE REQUIRED	252	4' - 5 1/4"	OFCI		--	NITROGEN	--	FORELINE PUMP EXHAUST & SPRAY CHAMBER EXHAUST	FOR GAS PURITY REQUIREMENTS REFER TO MFR. NITROGEN SUPPLIED BY N2 GAS GENERATOR	208	2.2	--	1	NEMA 6-15P
E21	1	ANALYTICAL HPLC SYSTEM	AGILENT	1290		ANTI-VIBRATION TABLE REQUIRED. PROVIDE MODULES G7104A, G7116B, G7117B, G7167B	136.9	2' - 11 1/8"	OFCI		--	--	--	--	--	120	1.2	--	1	NEMA 5-15 (x6)
E22	1	ELECTRON MICROSCOPE	THERMO FISHER SCIENTIFIC	AXIA CHEMISEM		ANTI-VIBRATION TABLE REQUIRED	0	1' - 3"	OFOI		--	--	--	--	--	120	--	16	1	NEMA 5-20P
E23	1	CENTRIFUGE	THERMO FISHER SCIENTIFIC	75009240			134	1' - 2 1/4"	OFCI		--	--	--	--	--	120	--	8.5	1	NEMA 5-15P
E30	2	ADJUSTABLE ANTI-VIBRATION TABLE (36"x96")	ONEPOINTE SOLUTIONS	CUSTOM					OFCI		--	--	--	--	--	--	--	--	--	--
E32	1	ADJUSTABLE ANTI-VIBRATION TABLE (36"x45")	ONEPOINTE SOLUTIONS	CUSTOM					OFCI		--	--	--	--	--	--	--	--	--	--
E33	2	ADJUSTABLE ANTI-VIBRATION TABLE (36"x72")	ONEPOINTE SOLUTIONS	CUSTOM					OFCI		--	--	--	--	--	--	--	--	--	--
E36	1	ADJUSTABLE ANTI-VIBRATION TABLE (36"x78")							OFCI		--	--	--	--	--	--	--	--	--	--

PLOT DATE: 11/10/2025 8:48:39 AM

IDENTIFICATION STAMP
DIV. OF THE STATE ARCHITECT
APP: 02-122821 INC: 2
REVIEWED FOR
SS ☑ FLS ☑ ACS ☑
DATE: 11/20/2025

Teter, Inc. expressly reserves its common law copyright and other property rights in these plans. This document, the ideas and designs incorporated herein, as an instrument of professional service, is not to be used in whole or in part, for any other project without prior written authorization.

MARK	DATE	DESCRIPTION
A	11/13/2025	DSA BACKCHECK

LICENSED ARCHITECT STATE OF CALIFORNIA

TETER, INC.
ARCHITECTS ENGINEERS CONNECTED
FRESNO HEADQUARTERS
VISALIA | BAKERSFIELD | MODESTO | SAN LUIS OBISPO

VISALIA CAMPUS UNIVERSITY CENTER
COLLEGE OF THE SEQUOIAS - INCREMENT 2
915 S. MOONEY BLVD
VISALIA, CALIFORNIA

DRAWING TITLE
EQUIPMENT SCHEDULE

PROJECT NO.
22-12498

DRAWING
A235.2

PLOT DATE: 11/10/2025 8:49:17 AM

\\tetr-file1\Users\tara.chong_TETR\Documents\12498-A-UC_tara.chong.rvt

0" 1" 2" 3" 4" 5" 6"

| | | |

\\tetr-file1\Users\tara.chong_TETR\Documents\12498-A-UC_tara.chong.rvt

PLOT DATE: 11/10/2025 8:50:05 AM

DSA A#02-122821

CHEMICAL	HAZARD DESCRIPTION	CLASS	PROJECT TOTALS TOTAL	PROJECT TOTALS UNITS	PREP LAB QTY	PREP LAB UNITS	CHEMISTRY LAB QTY	CHEMISTRY LAB UNITS
1-Propanol	FLAMMABLE LIQUIDS	2	1.06	gal	2	L	2	L
	SERIOUS EYE DAMAGE / EYE IRRITATION	2						
	STOT - SINGLE EXPOSURE	3						
2-Methyl-2-Butanol (t-Amyl alcohol, t-pentyl alcohol)	FLAMMABLE LIQUIDS	2	0.26	gal	0.5	L	0.5	L
	ACUTE TOXICITY DERMAL	4						
	ACUTE TOXICITY INHALATION	4						
	SKIN CORROSION / IRRITATION	2						
	SERIOUS EYE DAMAGE / EYE IRRITATION	1						
	STOT - SINGLE EXPOSURE	3						
Sodium oxalate	ACUTE TOXICITY ORAL	4	1.10	lbs	250	g	250	g
	ACUTE TOXICITY DERMAL	4						
	SERIOUS EYE DAMAGE / EYE IRRITATION	2						
Acetone	FLAMMABLE LIQUIDS	2	5.28	gal	10	L	10	L
	EYE IRRITANT	2A						
	STOT - SINGLE EXPOSURE	3						
Acetophenone	ACUTE TOXICITY ORAL	4	0.26	gal	0.5	L	0.5	L
	SERIOUS EYE DAMAGE / EYE IRRITATION	2						
Benzaldehyde	ACUTE TOXICITY ORAL	4	0.05	gal	100	mL	100	mL
	ACUTE TOXICITY INHALATION	4						
	SKIN CORROSION / IRRITATION	2						
	SERIOUS EYE DAMAGE / EYE IRRITATION	2						
	REPRODUCTIVE TOXICITY	1B						
	STOT - SINGLE EXPOSURE	3						
Benzoin	N/A		1.10	lbs	250	g	250	g
Benzophenone	CARCINOGENICITY	2	1.10	lbs	250	g	250	g
Cyclohexanone	ACUTE TOXICITY	4	0.40	gal	0.75	L	0.75	L
	SKIN CORROSION / IRRITATION	2						
	SERIOUS EYE DAMAGE / EYE IRRITATION	1						
Cyclopentanone	FLAMMABLE LIQUIDS	2	0.14	gal	263	mL	263	mL
	SKIN CORROSION / IRRITATION	2						
	SERIOUS EYE DAMAGE / EYE IRRITATION	2						
2-Butanone	FLAMMABLE LIQUIDS	2	1.06	gal	2	L	2	L
	SERIOUS EYE DAMAGE / EYE IRRITATION	2						
	STOT - SINGLE EXPOSURE	3						
	STOT - REPEATED EXPOSURE	2						
1,3-Diphenylacetone	N/A		0.11	lbs	25	g	25	g
1,4-Naphthoquinone	ACUTE TOXICITY ORAL	3	0.22	lbs	50	g	50	g
	ACUTE TOXICITY DERMAL	4						
	ACUTE TOXICITY INHALATION	4						
	SKIN CORROSION / IRRITATION	1C						
	SERIOUS EYE DAMAGE / EYE IRRITATION	1						
	SKIN SENSITIZATION	1						
	STOT - SINGLE EXPOSURE	3						
2-Hexanone	FLAMMABLE LIQUIDS	2	0.01	gal	12.5	mL	12.5	mL
	REPRODUCTIVE TOXICITY	2						
	STOT - SINGLE EXPOSURE	3						
	STOT - REPEATED EXPOSURE	1						
2-Octanone	FLAMMABLE LIQUIDS	2	0.13	gal	250	mL	250	mL
	SERIOUS EYE DAMAGE	2						
2-Pentanone	FLAMMABLE LIQUIDS	2	0.03	gal	62	mL	62	mL
	ACUTE TOXICITY ORAL	4						
	SERIOUS EYE DAMAGE / EYE IRRITATION	2						
4-Methyl-2-Pentanone	FLAMMABLE LIQUIDS	2	0.13	gal	250	mL	250	mL
	ACUTE TOXICITY INHALATION	4						
	SERIOUS EYE DAMAGE / EYE IRRITATION	2						
	CARCINOGENICITY	2						
	STOT - SINGLE EXPOSURE	3						
9-Fluorenone	SERIOUS EYE DAMAGE / EYE IRRITATION	2	0.22	lbs	50	g	50	g
Ethyl Acetoacetate	FLAMMABLE LIQUIDS	4	0.06	gal	122	mL	122	mL
Ethyl Butyrate	FLAMMABLE LIQUIDS	2	0.07	gal	125	mL	125	mL
	SERIOUS EYE DAMAGE / EYE IRRITATION	2						
Ethyl-4-Aminobenzoate	SKIN CORROSION / IRRITATION	2	0.22	lbs	50	g	50	g
	SERIOUS EYE DAMAGE / EYE IRRITATION	2						
	SKIN SENSITIZATION	1						
Formaldehyde	FLAMMABLE LIQUIDS	2	0.13	gal	250	mL	250	mL
	ACUTE TOXICITY ORAL	4						
	ACUTE TOXICITY DERMAL	4						
	ACUTE TOXICITY INHALATION	3						
	SKIN CORROSION / IRRITATION	1B						
	SERIOUS EYE DAMAGE / EYE IRRITATION	1						
	SKIN SENSITIZATION	1						
	GERM CELL MUTAGENICITY	2						
	CARCINOGENICITY	1A						
	STOT - SINGLE EXPOSURE	1						
	STOT - REPEATED EXPOSURE	1						
Hydroquinone	ACUTE TOXICITY ORAL	4	0.55	lbs	125	g	125	g
	SERIOUS EYE DAMAGE / EYE IRRITATION	1						
	SKIN SENSITIZATION	1						
	GERM CELL MUTAGENICITY	2						
	CARCINOGENICITY	2						
	STOT - SINGLE EXPOSURE	3						
	COMBUSTIBLE DUST							
Lecithin	N/A		0.55	lbs	125	g	125	g
Methyl 3-Nitrobenzoate	N/A		0.11	lbs	25	g	25	g
Methyl Acetone	FLAMMABLE LIQUIDS	2	0.03	gal	50	mL	50	mL
	SERIOUS EYE DAMAGE / EYE IRRITATION	2						
	STOT - SINGLE EXPOSURE	3						
	STOT - REPEATED EXPOSURE	2						
Methyl Benzoate	FLAMMABLE LIQUIDS	4	0.13	gal	250	mL	250	mL
	ACUTE TOXICITY ORAL	4						
Methyl Oleate	N/A		0.26	gal	0.5	L	0.5	L
Salol	SKIN CORROSION / IRRITATION	2	0.22	lbs	50	g	50	g
	SERIOUS EYE DAMAGE / EYE IRRITATION	2						
	STOT - SINGLE EXPOSURE	3						
Sodium formate	SKIN CORROSION / IRRITATION	2	1.10	lbs	250	g	250	g
	SERIOUS EYE DAMAGE / EYE IRRITATION	2						
	STOT - SINGLE EXPOSURE	3						
	COMBUSTIBLE DUST							
trans Jrans -Dibenzylideneacetone	N/A		0.06	lbs	12.5	g	12.5	g
Ethyl Acetate	FLAMMABLE LIQUIDS	2	2.11	gal	4	L	4	L
	SERIOUS EYE DAMAGE / EYE IRRITATION	2						
	STOT - SINGLE EXPOSURE	3						
Methyl Salicylate	ACUTE TOXICITY ORAL	4	0.79	gal	1.5	L	1.5	L
	SERIOUS EYE DAMAGE / EYE IRRITATION	1						
	SKIN SENSITIZATION	1B						
	REPRODUCTIVE TOXICITY	2						
Propionaldehyde	FLAMMABLE LIQUIDS	2	0.26	gal	0.5	L	0.5	L
	ACUTE TOXICITY ORAL	4						
	ACUTE TOXICITY INHALATION	4						
	SKIN CORROSION / IRRITATION	2						
	SERIOUS EYE DAMAGE / EYE IRRITATION	1						
	STOT - SINGLE EXPOSURE	3						
2,2-Bipyridine	ACUTE TOXICITY ORAL	3	0.02	lbs	5	g	5	g
	ACUTE TOXICITY DERMAL	3						
2-Deoxy-D-Ribose	N/A		0.01	lbs	2.5	g	2.5	g
3-Bromothiophene	FLAMMABLE LIQUIDS	2	0.01	gal	15	mL	15	mL
	ACUTE TOXICITY ORAL	4						
	ACUTE TOXICITY DERMAL	4						
	ACUTE TOXICITY INHALATION	1						
	SERIOUS EYE DAMAGE / EYE IRRITATION	1						
	SKIN SENSITIZATION	1						
	STOT - SINGLE EXPOSURE	3						
4-Chloroaniline	ACUTE TOXICITY ORAL	3	0.22	lbs	50	g	50	g
	ACUTE TOXICITY DERMAL	3						
	ACUTE TOXICITY INHALATION	3						
	SKIN SENSITIZATION	1						
	CARCINOGENICITY	1B						
Acetamide	CARCINOGENICITY	2	1.10	lbs	250	g	250	g
Acetanilide	ACUTE TOXICITY ORAL	4	1.10	lbs	250	g	250	g
	SKIN IRRITANT	2						
	EYE IRRITANT	2A						
	STOT - ORIGIN	3						
Aniline	ACUTE TOXICITY	3	0.05	gal	100	mL	100	mL
	SERIOUS EYE DAMAGE	1						
	GERM CELL MUTAGENICITY	2						
	CARCINOGENICITY	2						
	STOT - REPEATED EXPOSURE	2						
	SKIN SENSITIZATION	1						
Aspartame	N/A		0.33	lbs	75	g	75	g
Benzamide	ACUTE TOXICITY ORAL	4	0.22	lbs	50	g	50	g
	GERM CELL MUTAGENICITY	2						
Bis(dibenzylideneacetone) Palladium(0)	SKIN SENSITIZATION	1B	0.01	lbs	0.5	g	0.5	g
Caffeine	ACUTE TOXICITY	4	1.10	lbs	250	g	250	g
Cholesterol	N/A		0.44	lbs	100	g	100	g
Cocinione	ACUTE TOXICITY ORAL	2	0.01	lbs	0.5	g	0.5	g
	GERM CELL MUTAGENICITY	1B						
D-Arabinose	N/A		0.06	lbs	12.5	g	12.5	g
Dextrose	N/A		3.31	lbs	0.75	kg	0.75	kg
Dibenzoyl peroxide, 75% remainder water	SERIOUS EYE DAMAGE / EYE IRRITATION	2	0.44	lbs	100	g	100	g
	SKIN SENSITIZATION	1						
	STOT - SINGLE EXPOSURE	3						
Dimethylglyoxime	FLAMMABLE SOLIDS	2	0.06	lbs	12.5	g	12.5	g
	ACUTE TOXICITY ORAL	3						
	COMBUSTIBLE DUST							
N,N-Dimethylaniline	FLAMMABLE LIQUIDS	4	0.53	gal	1	L	1	L
	ACUTE TOXICITY ORAL	3						
	ACUTE TOXICITY DERMAL	3						
	ACUTE TOXICITY INHALATION	3						
	CARCINOGENICITY	2						
N,N-Dimethylformamide	FLAMMABLE LIQUIDS	2	0.40	gal	0.75	L	0.75	L
	ACUTE TOXICITY DERMAL	4						
	ACUTE TOXICITY INHALATION	4						
	SERIOUS EYE DAMAGE / EYE IRRITATION	2						
	CARCINOGENICITY	1B						
	REPRODUCTIVE TOXICITY	1B						
	STOT - SINGLE EXPOSURE	3						
N,N-Dimethylnaphthylamine	ACUTE TOXICITY ORAL	4	0.01	gal	12.5	mL	12.5	mL
	SKIN CORROSION / IRRITATION	2						
	SERIOUS EYE DAMAGE / EYE IRRITATION	2						
	STOT B - SINGLE EXPOSURE	3						
R-(-)-Carvone	FLAMMABLE LIQUIDS	4	0.03	gal	50	mL	50	mL
	SKIN SENSITIZATION	1						
S-(-)-Carvone	SKIN SENSITIZATION	1	0.06	lbs	12.5	g	12.5	g
N-Bromosuccinimide	OXIDIZING SOLIDS	3	0.22	lbs	50	g	50	g
	CORROSIVE TO METALS	1						
	SKIN CORROSION / IRRITATION	2						
	SERIOUS EYE DAMAGE / EYE IRRITATION	2						
	SKIN SENSITIZATION	1						
1,6-Hexanediamine (Hexamethylenediamine)	ACUTE TOXICITY ORAL	4	0.26	gal	0.5	L	0.5	L
	ACUTE TOXICITY DERMAL	4						
	SKIN CORROSION / IRRITATION	1B						
	SERIOUS EYE DAMAGE / EYE IRRITATION	1						
	STOT - SINGLE EXPOSURE	3						
1-Formylpiperidine	FLAMMABLE LIQUIDS	4	0.01	gal	25	mL	25	mL
	ACUTE TOXICITY ORAL	4						
	ACUTE TOXICITY DERMAL	4						
	SKIN CORROSION / IRRITATION	2						
	SERIOUS EYE DAMAGE / EYE IRRITATION	2						
	STOT - SINGLE EXPOSURE	3						
3-Nitroaniline	ACUTE TOXICITY ORAL	3	0.22	lbs	50	g	50	g
	ACUTE TOXICITY DERMAL	3						
	ACUTE TOXICITY INHALATION	3						
	STOT - REPEATED EXPOSURE	2						

DSA A#02-122821

CHEMICAL	HAZARD DESCRIPTION	CLASS	PROJECT TOTALS TOTAL	PROJECT TOTALS UNITS	PREP LAB QTY	PREP LAB UNITS	CHEMISTRY LAB QTY	CHEMISTRY LAB UNITS
4-Nitroaniline	ACUTE TOXICITY ORAL	3	1.32	lbs	300	g	300	g
	ACUTE TOXICITY DERMAL	3						
	ACUTE TOXICITY INHALATION	3						
	STOT - REPEATED EXPOSURE	2						
Ethyl thioglycolate	FLAMMABLE LIQUIDS	3	0.01	gal	12	mL	12	mL
	ACUTE TOXICITY ORAL	3						
Ethylamine, 2M in THF	FLAMMABLE LIQUIDS	2	0.03	gal	50	mL	50	mL
	ACUTE TOXICITY ORAL	4						
	SERIOUS EYE DAMAGE / EYE IRRITATION	2						
	CARCINOGENICITY	2						
	STOT - SINGLE EXPOSURE	3						
Ethylenediamine	FLAMMABLE LIQUIDS	3	0.26	gal	0.5	L	0.5	L
	ACUTE TOXICITY ORAL	4						
	ACUTE TOXICITY DERMAL	4						
	SKIN CORROSION / IRRITATION	1B						
	SERIOUS EYE DAMAGE / EYE IRRITATION	1						
	RESPIRATORY SENSITIZATION	1						
	SKIN SENSITIZATION	1						
	STOT - SINGLE EXPOSURE	3						
Ferron solution	EYE IRRITANT	2A	0.01	gal	15	mL	15	mL
	SKIN IRRITANT	2						
Fructose	N/A		2.20	lbs	0.5	kg	0.5	kg
Galactose	N/A		0.66	lbs	150	g	150	g
Glucose	N/A		2.20	lbs	0.5	kg	0.5	kg
Glycine	N/A		0.77	lbs	175	g	175	g
Glycine HC	SKIN CORROSION / IRRITATION	1B	0.22	lbs	50	g	50	g
	SERIOUS EYE DAMAGE / EYE IRRITATION	1						
	STOT - SINGLE EXPOSURE	3						
Lactose	N/A		5.00	lbs	2.5	lbs	2.5	lbs
Lysine	N/A		0.44	lbs	100	g	100	g
N-Methylaniline	FLAMMABLE LIQUIDS	4	0.11	lbs	25	g	25	g
	ACUTE TOXICITY ORAL	3						
	ACUTE TOXICITY DERMAL	3						
	ACUTE TOXICITY INHALATION	3						
	STOT - REPEATED EXPOSURE	2						
Orcinol monohydrate	ACUTE TOXICITY ORAL	4	0.06	lbs	12.5	g	12.5	g
	SKIN CORROSION / IRRITATION	2						
	SERIOUS EYE DAMAGE / EYE IRRITATION	2						
	STOT - SINGLE EXPOSURE	3						
Pepsin	SKIN CORROSION / IRRITATION	2	0.11	lbs	25	g	25	g
	SERIOUS EYE DAMAGE / EYE IRRITATION	2						
	RESPIRATORY SENSITIZATION	1						
	SKIN SENSITIZATION	1						
	STOT - SINGLE EXPOSURE	3						
1,10-Phenanthroline	ACUTE TOXICITY ORAL	3	0.02	lbs	5	g	5	g
	STOT - REPEATED EXPOSURE	2						
D-Xylose	N/A		0.22	lbs	50	g	50	g
p-Phenylenediamine	ACUTE TOXICITY ORAL	3	0.55	lbs	125	g	125	g
	ACUTE TOXICITY DERMAL	4						
	ACUTE TOXICITY INHALATION	4						
	SERIOUS EYE DAMAGE / EYE IRRITATION	2						
	SKIN SENSITIZATION	1						
	GERM CELL MUTAGENICITY	2						
	CARCINOGENICITY	1						
	COMBUSTIBLE DUST							
Pyridine	FLAMMABLE LIQUIDS	2	0.25	gal	1	pt	1	pt
	ACUTE TOXICITY ORAL	4						
	ACUTE TOXICITY DERMAL	4						
	ACUTE TOXICITY INHALATION	4						
	SKIN CORROSION / IRRITATION	2						
	SERIOUS EYE DAMAGE / EYE IRRITATION	2						
Quinoline	ACUTE TOXICITY ORAL	3	0.26	gal	0.5	L	0.5	L
	ACUTE TOXICITY DERMAL	4						
	SKIN CORROSION / IRRITATION	2						
	SERIOUS EYE DAMAGE / EYE IRRITATION	2						
	GERM CELL MUTAGENICITY	2						
	CARCINOGENICITY	1B						
Salicylamide	ACUTE TOXICITY ORAL	4	2.20	lbs	0.5	kg	0.5	kg
	SKIN CORROSION / IRRITATION	2						
	SERIOUS EYE DAMAGE / EYE IRRITATION	2						
	STOT - SINGLE EXPOSURE	3						
Starch soluble (powder)	N/A		2.00	lbs	1	lbs	1	lbs
Sulfanilamide	SKIN CORROSION / IRRITATION	2	0.22	lbs	50	g	50	g
	SERIOUS EYE DAMAGE / EYE IRRITATION	2						
	STOT - SINGLE EXPOSURE	3						
Thermit	FLAMMABLE SOLIDS	2	1.10	lbs	250	g	250	g
Thermit igniting sticks	FLAMMABLE SOLIDS	2	0.44	lbs	5	sticks	5	sticks
Thiene(3,2-d)thiophene	SKIN CORROSION / IRRITATION	2	0.11	lbs	25	g	25	g
	SERIOUS EYE DAMAGE / EYE IRRITATION	2						
	STOT - SINGLE EXPOSURE	3						
Thioacetamide	ACUTE TOXICITY ORAL	4	1.10	lbs	250	g	250	g
	SKIN CORROSION / IRRITATION	2						
	CARCINOGENICITY	2						
	STOT - SINGLE EXPOSURE	3						
	STOT - REPEATED EXPOSURE	2						
Triethanolamine	CARCINOGENICITY	2	4.41	lbs	1	kg	1	kg
Triethylamine (TEA)	FLAMMABLE LIQUIDS	2	0.11	lbs	25	g	25	g
	ACUTE TOXICITY ORAL	4						
	ACUTE TOXICITY DERMAL	3						
	ACUTE TOXICITY INHALATION	3						
	SKIN CORROSION / IRRITATION	1A						
	SERIOUS EYE DAMAGE / EYE IRRITATION	1						
	STOT - SINGLE EXPOSURE	3						
Triphenylphosphine	ACUTE TOXICITY ORAL	4	0.11	lbs	25	g	25	g
	SKIN SENSITIZATION	1						
	STOT - REPEATED EXPOSURE	2						
Tris(1,10-phenanthroline)(iron(II) sulfate, 0.025M aq)	N/A		0.03	gal	50	mL	50	mL
Tris(hydroxymethylaminomethane	N/A		0.22	lbs	50	g	50	g
Urea	N/A		2.00	lbs	1	lbs	1	lbs
Propane	FLAMMABLE GASES	1	0.11	gal	7	oz	7	oz
	GASES UNDER PRESSURE							
Tetrahydrofuran	FLAMMABLE LIQUIDS	2	1.06	gal	2	L	2	L
	ACUTE TOXICITY ORAL	4						
	SERIOUS EYE DAMAGE / EYE IRRITATION	2						
	CARCINOGENICITY	2						
	STOT - SINGLE EXPOSURE	3						
Bromine	ACUTE TOXICITY INHALATION	1	0.07	gal	125	mL	125	mL
	SKIN CORROSION / IRRITATION	1A						
	SERIOUS EYE DAMAGE / EYE IRRITATION	1						
Chlorosulfonic acid	SKIN CORROSION / IRRITATION	1A	0.13	gal	250	mL	250	mL
	SERIOUS EYE DAMAGE / EYE IRRITATION	1						
	STOT - SINGLE EXPOSURE	3						
Iodic Acid	OXIDIZING SOLIDS	2	0.22	lbs	50	g	50	g
	SKIN CORROSION / IRRITATION	1A						
	SERIOUS EYE DAMAGE / EYE IRRITATION	1						
	STOT - SINGLE EXPOSURE	3						
Nithylrin	SKIN IRRITATION	2	0.02	lbs	5	g	5	g
	EYE IRRITATION	2A						
	STOT - SINGLE EXPOSURE	3						
	ACUTE TOXICITY	4						
Palladium on activated carbon	FLAMMABLE SOLIDS	2	0.02	lbs	5	g	5	g
	COMBUSTIBLE DUST							
2,4-Dinitrophenol	FLAMMABLE SOLIDS	1	0.33	lbs	75	g	75	g
	ACUTE TOXICITY ORAL	3						
	ACUTE TOXICITY INHALATION	3						
	ACUTE TOXICITY DERMAL	3						
	STOT - REPEATED EXPOSURE	2						
2,6-Di-t-butyl-4-methylphenol	N/A		1.10	lbs	250	g	250	g
4-D-Octylphenol	SKIN IRRITATION	2	1.10	lbs	250	g	250	g
	SERIOUS EYE DAMAGE	1						
4-Acetamidophenol	ACUTE TOXICITY ORAL	4	1.32	lbs	300	g	300	g
4-Aminophenol	ACUTE TOXICITY ORAL	4	2.20	lbs	0.5	kg	0.5	kg
	ACUTE TOXICITY INHALATION	4						
	GERM CELL MUTAGENICITY	2						
4-Bromophenol	ACUTE TOXICITY ORAL	4	0.01	lbs	2.5	g	2.5	g
	SKIN CORROSION / IRRITATION	2						
	SERIOUS EYE DAMAGE / EYE IRRITATION	2						
	STOT - SINGLE EXPOSURE	3						
4-Isobutyl-α-methylphenylacetic acid (Ibuprofen)	ACUTE TOXICITY ORAL	4	0.01	lbs	2.5	g	2.5	g
	SERIOUS EYE DAMAGE / EYE IRRITATION	2						
	STOT - SINGLE EXPOSURE	3						
4-tertbutylphenol	SKIN CORROSION / IRRITATION	2	2.20	lbs	0.5	kg	0.5	kg
	SERIOUS EYE DAMAGE / EYE IRRITATION	2						
	REPRODUCTIVE TOXICITY	2						
p-Cresol	FLAMMABLE LIQUIDS	4	0.22	lbs	50	g	50	g
	ACUTE TOXICITY ORAL	3						
	ACUTE TOXICITY DERMAL	3						
	SKIN CORROSION / IRRITATION	1B						
	SERIOUS EYE DAMAGE / EYE IRRITATION	1						
	STOT - SINGLE EXPOSURE	3						
Phenol	ACUTE TOXICITY	3	1.10	lbs	250	g	250	g
	SKIN CORROSION	1B						
	GERM CELL MUTAGENICITY	2						
	STOT - REPEATED EXPOSURE	2						
Phenyl isocyanate	FLAMMABLE LIQUIDS	3	0.02	gal	46	mL	46	mL
	ACUTE TOXICITY ORAL	4						
	ACUTE TOXICITY INHALATION	4						
	SKIN CORROSION / IRRITATION	1C						
	SERIOUS EYE DAMAGE / EYE IRRITATION	1						
	RESPIRATORY SENSITIZATION	1						
	SKIN SENSITIZATION	1						
	STOT - SINGLE EXPOSURE	3						
p-Terphenyl	ACUTE TOXICITY ORAL	4	0.06	lbs	12.5	g	12.5	g
	SKIN CORROSION / IRRITATION	2						
	SERIOUS EYE DAMAGE / EYE IRRITATION	2						
	STOT - SINGLE EXPOSURE	3						
p-Toluidine	ACUTE TOXICITY ORAL	3	2.20	lbs	0.5	kg	0.5	kg
	SKIN CORROSION / IRRITATION	1A						
	SERIOUS EYE DAMAGE / EYE IRRITATION	1						
	STOT - SINGLE EXPOSURE	3						
Sodium tetraphenylborate	ACUTE TOXICITY ORAL	3	0.22	lbs	50	g	50	g
2,4-Dinitrophenylhydrazine	SERIOUS EYE DAMAGE / IRRITATION	1	0.55	lbs	125	g	125	g
	GERM CELL MUTAGENICITY	1B						
	REPRODUCTIVE TOXICITY	1A						
	STOT - SINGLE EXPOSURE	3						
	STOT - REPEATED EXPOSURE	2						
	FLAMMABLE LIQUIDS	2						
	SKIN CORROSION / IRRITATION	1B						
Diethylamine	FLAMMABLE LIQUIDS	2	0.26	gal	0.5	L	0.5	L
	ACUTE TOXICITY ORAL	4						
	ACUTE TOXICITY DERMAL	4						
	ACUTE TOXICITY INHALATION	4						
	SKIN CORROSION / IRRITATION	1A						
	SERIOUS EYE DAMAGE / EYE IRRITATION	1						
	STOT - SINGLE EXPOSURE	3						
Pancreatin, Type II	SKIN IRRITATION	2	0.22	lbs	50	g	50	g
	EYE IRRITATION	2						
	RESPIRATORY SENSITIZATION	1						
	STOT - SINGLE EXPOSURE	3						
Retinoic Acid	ACUTE TOXICITY ORAL	4	0.01	lbs	0.25	g	0.25	g
	ACUTE TOXICITY DERMAL	4						
	SKIN CORROSION / IRRITATION	2						
	SERIOUS EYE DAMAGE / EYE IRRITATION	2						
	REPRODUCTIVE TOXICITY	2						
	STOT - SINGLE EXPOSURE	3						
trans-β-carotene	N/A		0.01	lbs	2.5	g	2.5	g

DSA A#02-122821

CHEMICAL	HAZARD DESCRIPTION	CLASS	PROJECT TOTALS TOTAL	PROJECT TOTALS UNITS	PREP LAB QTY	PREP LAB UNITS	CHEMISTRY LAB QTY	CHEMISTRY LAB UNITS
4-Amino-1-naphthalenesulfonic Acid sodium salt, hydrate	ACUTE TOXICITY ORAL	4	0.01	lbs	2.5	g	2.5	g
	SKIN CORROSION / IRRITATION	2						
	SERIOUS EYE DAMAGE / EYE IRRITATION	2A						
	STOT - SINGLE EXPOSURE	3						
4-Aminobenzoic Acid	COMBUSTIBLE DUST		1.10	lbs	250	g	250	g
Acetic Anhydride	FLAMMABLE LIQUIDS	3	0.26	gal	0.5	L	0.5	L
	ACUTE TOXICITY	4						
	SKIN CORROSION	1						
	SERIOUS EYE DAMAGE	1						
Acetylsalicylic Acid	ACUTE ORAL TOXICITY	4	2.20	lbs	0.5	kg	0.5	kg
	COMBUSTIBLE DUST							
Alanine	N/A		0.29	lbs	65	g	65	g
Aspartic Acid	N/A		0.22	lbs	50	g	50	g
Benzoic Acid	SKIN CORROSION / IRRITATION	2	1.10	lbs	250	g	250	g
	SERIOUS EYE DAMAGE / EYE IRRITATION	2						
	STOT - REPEATED EXPOSURE	2						
	COMBUSTIBLE DUST							
Cinnamic Acid	N/A		0.22	lbs	50	g	50	g
Citric Acid	EYE IRRITATION	2A	1.10	lbs	250	g	250	g
Crotonic Acid	ACUTE TOXICITY ORAL	4	1.10	lbs	250	g	250	g
	ACUTE TOXICITY DERMAL	3						
	SKIN CORROSION / IRRITATION	1						
	SERIOUS EYE DAMAGE / EYE IRRITATION	1						
	CORROSIVE TO METALS	1						
DL-DL-Alanine	N/A		0.22	lbs	50	g	50	g
Diphenylacetic Acid	SKIN CORROSION / IRRITATION	2	0.22	lbs	50	g	50	g
	SERIOUS EYE DAMAGE / EYE IRRITATION	2						
DL-L-Cysteine	SKIN CORROSION / IRRITATION	2	0.08	lbs	17.5	g	17.5	g
	SERIOUS EYE DAMAGE / EYE IRRITATION	2						
Formic Acid, 88%	FLAMMABLE LIQUIDS	3	0.03	gal	50	mL	50	mL
	ACUTE TOXICITY ORAL	4						
	ACUTE TOXICITY INHALATION	3						
	SKIN CORROSION / IRRITATION	1A						
	SERIOUS EYE DAMAGE / EYE IRRITATION	1						
Ketoprofen	ACUTE TOXICITY ORAL	3	0.06	lbs	12.5	g	12.5	g
	SKIN CORROSION / IRRITATION	2						
	EYE DAMAGE / IRRITATION	2A						
L-Ascorbic Acid	N/A		1.10	lbs	250	g	250	g
L-Aspartic Acid	N/A		0.22	lbs	50	g	50	g
Lauric Acid	SERIOUS EYE DAMAGE	1	1.10	lbs	250	g	250	g
Leucine	N/A		0.22	lbs	50	g	50	g
L-Glutamic Acid HCl	COMBUSTIBLE DUST		0.22	lbs	50	g	50	g
L-Histidine, monohydrochloride monohydrate	N/A		0.22	lbs	50	g	50	g
3-Nitrophthalic Acid	SKIN CORROSION / IRRITATION	2	0.22	lbs	50	g	50	g
	SERIOUS EYE DAMAGE / EYE IRRITATION	2						
	STOT - SINGLE EXPOSURE	3						
	COMBUSTIBLE DUST							
DL-DL-Tartaric Acid	SERIOUS EYE DAMAGE / EYE IRRITATION	1	3.31	lbs	0.75	kg	0.75	kg
	COMBUSTIBLE DUST							
DL-Malic Acid	SKIN CORROSION / IRRITATION	2	1.10	lbs	250	g	250	g
	SERIOUS EYE DAMAGE / EYE IRRITATION	2A						
	STOT - SINGLE EXPOSURE	3						
O-Phenylalanine	N/A		0.06	lbs	12.5	g	12.5	g
O-Ribose	N/A		0.02	lbs	5	g	5	g
L-Serine	N/A		0.22	lbs	50	g	50	g
L-Tyrosine	SKIN CORROSION / IRRITATION	2	0.44	lbs	100	g	100	g
	SERIOUS EYE DAMAGE / EYE IRRITATION	2						
	STOT - SINGLE EXPOSURE	3						
Maleic Anhydride	ACUTE TOXICITY ORAL	4	2.20	lbs	0.5	kg	0.5	kg
	SKIN CORROSION / IRRITATION	1B						
	SERIOUS EYE DAMAGE / EYE IRRITATION	1						
	RESPIRATORY SENSITIZATION	1						
	SKIN SENSITIZATION	1						
	STOT - REPEATED EXPOSURE	2						
Malonic Acid	SERIOUS EYE DAMAGE / EYE IRRITATION	1	0.28	lbs	75	g	75	g
m-Toluic Acid	SERIOUS EYE DAMAGE / EYE IRRITATION	1	0.77	lbs	175	g	175	g
Naproxen	ACUTE TOXICITY ORAL	3	0.01	lbs	2.5	g	2.5	g
	SKIN CORROSION / IRRITATION	2						
	SERIOUS EYE DAMAGE / EYE IRRITATION	2						
	STOT - SINGLE EXPOSURE	3						
Oleic Acid	N/A		0.13	gal	250	mL	250	mL
Oxalic Acid	ACUTE TOXICITY ORAL	4	1.10	lbs	250	g	250	g
	ACUTE TOXICITY DERMAL	4						
	SERIOUS EYE DAMAGE / EYE IRRITATION	1						
	STOT - REPEATED EXPOSURE	2						
Phthalic Acid	SERIOUS EYE DAMAGE / EYE IRRITATION	1	1.10	lbs	250	g	250	g
Potassium sodium tartrate tetrahydrate	N/A		1.10	lbs	250	g	250	g
p-Toluenesulfonic Acid monohydrate	SKIN CORROSION / IRRITATION	1C	1.10	lbs	250	g	250	g
	SERIOUS EYE DAMAGE / EYE IRRITATION	1						
	STOT - SINGLE EXPOSURE	3						
	STOT - REPEATED EXPOSURE	2						
Salicylic Acid	ACUTE TOXICITY ORAL	4	1.10	lbs	250	g	250	g
	SERIOUS EYE DAMAGE / EYE IRRITATION	1						
	REPRODUCTIVE TOXICITY	2						
Sebacic Acid	N/A		0.22	lbs	50	g	50	g
Sodium choleate	ACUTE TOXICITY ORAL	4	0.06	lbs	12.5	g	12.5	g
	SKIN CORROSION / IRRITATION	2						
	SERIOUS EYE DAMAGE / EYE IRRITATION	2A						
	STOT - SINGLE EXPOSURE	3						
Sorbic Acid	SKIN CORROSION / IRRITATION	2	0.22	lbs	50	g	50	g
	SERIOUS EYE DAMAGE / EYE IRRITATION	2						
	STOT - SINGLE EXPOSURE	3						
Stearic Acid	COMBUSTIBLE DUST		2.20	lbs	0.5	kg	0.5	kg
Succinic Acid	SERIOUS EYE DAMAGE	1	5.00	lbs	2.5	lbs	2.5	lbs
Sulfamic Acid	SKIN CORROSION / IRRITATION	2	1.10	lbs	250	g	250	g
	SERIOUS EYE DAMAGE / EYE IRRITATION	2						
Sulfanilic Acid	SKIN CORROSION / IRRITATION	2	0.22	lbs	50	g	50	g
	SERIOUS EYE DAMAGE / EYE IRRITATION	2						
	SKIN SENSITIZATION	1						
Thiamine HCl	SERIOUS EYE DAMAGE / EYE IRRITATION	1	0.22	lbs	50	g	50	g
	COMBUSTIBLE DUST							
Trichloroacetic Acid	SKIN CORROSION / IRRITATION	1A	0.22	lbs	50	g	50	g
	SERIOUS EYE DAMAGE / EYE IRRITATION	1						
	CARCINOGENICITY	1						
	STOT - SINGLE EXPOSURE	3						
Borane Tetrahydrofuran complex 1M solution in THF	FLAMMABLE LIQUIDS	2	0.05	gal	100	mL	100	mL
	WATER REACTIVE	1						
	ACUTE TOXICITY ORAL	4						
	SKIN CORROSION / IRRITATION	1						
	SERIOUS EYE DAMAGE / EYE IRRITATION	1						
	CARCINOGENICITY	2						
	STOT - SINGLE EXPOSURE	3						
Butyric Acid	FLAMMABLE LIQUIDS	4	0.07	gal	130	mL	130	mL
	SKIN CORROSION	1B						
	EYE CORROSION	1						
Cumene	FLAMMABLE LIQUIDS	3	0.26	gal	0.5	L	0.5	L
	CARCINOGENICITY	1B						
	STOT - SINGLE EXPOSURE	3						
	ASPIRATION TOXICITY	1						
N-Butylamine	FLAMMABLE LIQUIDS	2	0.13	gal	250	mL	250	mL
	ACUTE TOXICITY ORAL	4						
	ACUTE TOXICITY DERMAL	3						
	ACUTE TOXICITY INHALATION	3						
	SKIN CORROSION / IRRITATION	1A						
	SERIOUS EYE DAMAGE / EYE IRRITATION	1						
	STOT - SINGLE EXPOSURE	3						
trans-Cinnamaldehyde	FLAMMABLE LIQUIDS	4	0.14	gal	262	mL	262	mL
	ACUTE DERMAL TOXICITY	4						
	SKIN CORROSION / IRRITATION	2						
	SERIOUS EYE DAMAGE / EYE IRRITATION	2						
	SKIN SENSITIZATION	1						
	STOT - SINGLE EXPOSURE	3						
2,3-Butanedione (Diacetyl)	FLAMMABLE LIQUIDS	2	0.08	gal	150	mL	150	mL
	ACUTE TOXICITY ORAL	4						
	ACUTE TOXICITY INHALATION	3						
	SKIN CORROSION / IRRITATION	2						
	SERIOUS EYE DAMAGE / EYE IRRITATION	1						
	SKIN SENSITIZATION	1						
	STOT - REPEATED EXPOSURE	2						
1,4-Dioxane	FLAMMABLE LIQUIDS	2	0.07	gal	125	mL	125	mL
	SERIOUS EYE DAMAGE / EYE IRRITATION	2						
	CARCINOGENICITY	2						
	STOT - SINGLE EXPOSURE	3						
3-Pentanone	FLAMMABLE LIQUIDS	2	0.13	gal	250	mL	250	mL
	SERIOUS EYE DAMAGE / EYE IRRITATION	2						
	STOT - SINGLE EXPOSURE	3						
Diastase	RESPIRATORY SENSITIZATION	1	0.66	lbs	150	g	150	g
	SKIN SENSITIZATION	1						
Hydrazine hydrate	ACUTE TOXICITY ORAL	3	0.13	gal	250	mL	250	mL
	ACUTE TOXICITY INHALATION	2						
	ACUTE TOXICITY DERMAL	2						
	SKIN CORROSION	1						
	SKIN SENSITIZATION	1						
	CARCINOGENICITY	1B						
Oxalyl chloride	WATER REACTIVE	1	0.22	lbs	50	g	50	g
	ACUTE TOXICITY ORAL	3						
	ACUTE TOXICITY INHALATION	3						
	SKIN CORROSION / IRRITATION	1						
	SERIOUS EYE DAMAGE / EYE IRRITATION	1						
Propylamine	FLAMMABLE LIQUIDS	2	0.07	gal	125	mL	125	mL
	CORROSIVE TO METALS	1						
	ACUTE TOXICITY ORAL	4						
	ACUTE TOXICITY DERMAL	3						
	ACUTE TOXICITY INHALATION	1						
	SKIN CORROSION / IRRITATION	1						
	SERIOUS EYE DAMAGE / EYE IRRITATION	1						
	STOT - SINGLE EXPOSURE	3						
Styrene	FLAMMABLE LIQUIDS	3	0.53	gal	1	L	1	L
	ACUTE TOXICITY INHALATION	4						
	SKIN CORROSION / IRRITATION	2						
	SERIOUS EYE DAMAGE / EYE IRRITATION	2						
	CARCINOGENICITY	2						
	REPRODUCTIVE TOXICITY	2						
	STOT - SINGLE EXPOSURE	3						
	STOT - REPEATED EXPOSURE	1						
	ASPIRATION TOXICITY	1						
2,6-Dichlorindophenol	N/A		0.01	lbs	1	g	1	g
3-Indoleibutyric acid	ACUTE TOXICITY ORAL	3	0.01	lbs	2.5	g	2.5	g
	SKIN CORROSION / IRRITATION	2						
	SERIOUS EYE DAMAGE / EYE IRRITATION	2						
	STOT - SINGLE EXPOSURE	3						
Acetylferrocene	ACUTE TOXICITY ORAL	3	0.01	lbs	2.5	g	2.5	g
	ACUTE TOXICITY DERMAL	3						
Chloroacetone	FLAMMABLE LIQUIDS	3	0.05	gal	86	mL	86	mL
	ACUTE TOXICITY ORAL	3						
	ACUTE TOXICITY DERMAL	3						
	ACUTE TOXICITY INHALATION	3						
	SKIN CORROSION / IRRITATION	1						
	SERIOUS EYE DAMAGE / EYE IRRITATION	1						
	STOT - SINGLE EXPOSURE	3						

DSA A#02-122821

CHEMICAL	HAZARD DESCRIPTION	CLASS	PROJECT TOTALS TOTAL	PROJECT TOTALS UNITS	PREP LAB QTY	PREP LAB UNITS	CHEMISTRY LAB QTY	CHEMISTRY LAB UNITS
Isovaleraldehyde	FLAMMABLE LIQUIDS	2	0.03	gal	50	mL	50	mL
	SERIOUS EYE DAMAGE / EYE IRRITATION	2						
	SKIN SENSITIZATION	1						
	STOT - SINGLE EXPOSURE	3						
Phosphomolybdic acid hydrate	OXIDIZING SOLID	3	0.06	lbs	12.5	g	12.5	g
	SKIN CORROSION	1B						
	SERIOUS EYE DAMAGE	1						
Isobutyl alcohol (2-Methyl-1-Propanol)	FLAMMABLE LIQUIDS	3	0.13	gal	250	mL	250	mL
	SKIN CORROSION / IRRITATION	2						
	SERIOUS EYE DAMAGE / EYE IRRITATION	1						
	STOT - SINGLE EXPOSURE	3						
Sodium ethoxide	FLAMMABLE SOLIDS	1	0.11	lbs	25	g	25	g
	SELF-HEATING SUBSTANCE AND MIXTURE	1						
	SKIN CORROSION / IRRITATION	1B						
	SERIOUS EYE DAMAGE / EYE IRRITATION	1						
	STOT - SINGLE EXPOSURE	3						
	COMBUSTIBLE DUST							
Hydrogen peroxide, 30%	OXIDIZING LIQUID	2	0.53	gal	1	L	1	L
	ACUTE TOXICITY ORAL	4						
	ACUTE TOXICITY INHALATION	4						
	SKIN CORROSION / IRRITATION	1A						
	SERIOUS EYE DAMAGE / EYE IRRITATION	1						
Acetylene Gas	FLAMMABLE GAS	1	244.00	cf	244	cf		
	HAZARDOUS GAS UNDER PRESSURE							
Hydrogen Gas	FLAMMABLE GAS	1	244.00	cf	244	cf		
	HAZARDOUS GAS UNDER PRESSURE							
PS Gas	NON FLAMMABLE COMPRESSED		244.00	cf	244	cf		
Nitrogen Gas	NON FLAMMABLE COMPRESSED		488.00	cf	488	cf		
	SIMPLE ASPHYXIANTS							
Helium Gas	HAZARDOUS GAS UNDER PRESSURE		244.00	cf	244	cf		
Argon Gas	SIMPLE ASPHYXIANTS		244.00	cf	244	cf		
	HAZARDOUS GAS UNDER PRESSURE							
Nitrous Oxide Gas	OXIDIZING GASES	1	244.00	cf	244	cf		
	HAZARDOUS GAS UNDER PRESSURE - LIQUIFIED GAS	1						
	STOT - SINGLE EXPOSURE	3						
H2 Inert Gas Mixture	FLAMMABLE GAS	1	244.00	cf	244	cf		
	HAZARDOUS GAS UNDER PRESSURE							

	CLASS	QUANTITIES FROM CBC TABLE 307.1.2 (WITH INCREASE FOR AUTOMATIC SPRINKLER SYSTEM AND APPROVED STORAGE CABINETS)		PROPOSED QTY'S FOR THIS PROJECT	
CORROSIVES		20,000	lbs	128.35	lbs
HIGHLY TOXIC		2,000	gal	19.95	gal
TOXIC		40	lbs	27.06	lbs
		40	gal	0.28	gal
		1,000	lbs	139.29	lbs
		2,000	gal	22.90	gal

	CLASS	QUANTITIES FROM CBC TABLE 307.1.1 (WITH INCREASE FOR AUTOMATIC SPRINKLER SYSTEM AND APPROVED STORAGE CABINETS)		PROPOSED QTY'S FOR THIS PROJECT	
COMBUSTIBLE DUST	N/A	N/A	lbs	87.64	lbs
FLAMMABLE GAS	GASEOUS 1A/1B	4,000	cf	732	cf
FLAMMABLE GAS	LIQUIFIED 1A/1B	300	gal	0.11	gal
FLAMMABLE LIQUID	1A	120	gal	37.97	gal
FLAMMABLE LIQUID	1B/1C	480	gal		
FLAMMABLE SOLID	N/A	500	lbs	35.23	lbs
OXIDIZER	3	40	lbs	9.09	lbs
OXIDIZER	2	1000	lbs	31.47	lbs
OXIDIZER	1	8,000	lbs	4.41	lbs
OXIDIZING GAS	GASEOUS	3,000	cf	244	cf
OXIDIZING GAS	LIQUIFIED	N/A	cf		
WATER REACTIVE	2	200	lbs	3.1967	lbs
WATER REACTIVE	1	NL	lbs	7.39	lbs

IDENTIFICATION STAMP
DIV. OF THE STATE ARCHITECT
APP: 02-122821 INC: 2
REVIEWED FOR
SS ☑ FLS ☑ ACS ☑
DATE: 11/20/2025

Teter, Inc. expressly reserves its common law copyright and other property rights in these plans. This document, the ideas and designs incorporated herein, as an instrument of professional service, is not to be used in whole or in part, for any other project without prior written authorization.

MARK	DATE	DESCRIPTION
A	11/13/2025	DSA BACKCHECK

LICENSED ARCHITECT JONATHAN COULTER STATE OF CALIFORNIA

TETER, INC.
FRESNO HEADQUARTERS
VISALIA | BAKERSFIELD | MODESTO | SAN LUIS OBISPO
ARCHITECTS ENGINEERS CONNECTED

VISALIA CAMPUS UNIVERSITY CENTER
COLLEGE OF THE SEQUOIAS - INCREMENT 2
915 S. MOONEY BLVD
VISALIA, CALIFORNIA

DRAWING TITLE
HAZARDOUS MATERIALS REPORT

PROJECT NO.
22-12498

DRAWING
A237.2

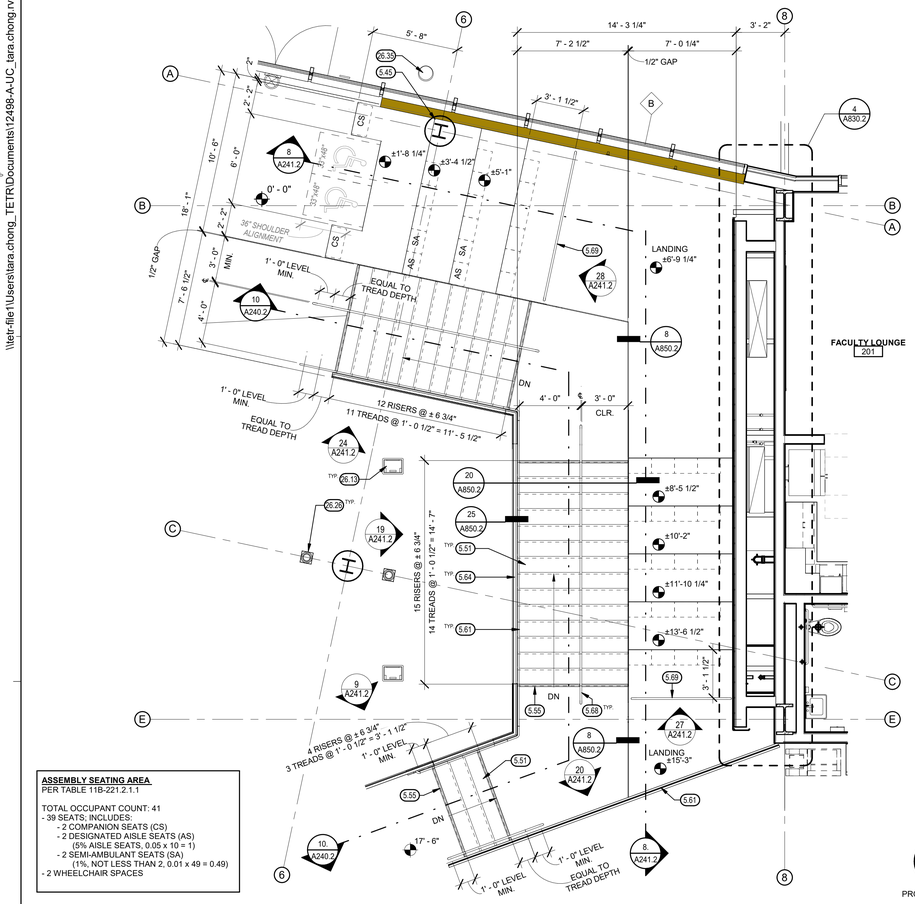

EXIT ACCESS STAIR 1 - ENLARGED SECOND FLOOR PLAN — 1/4" = 1'-0" | 18

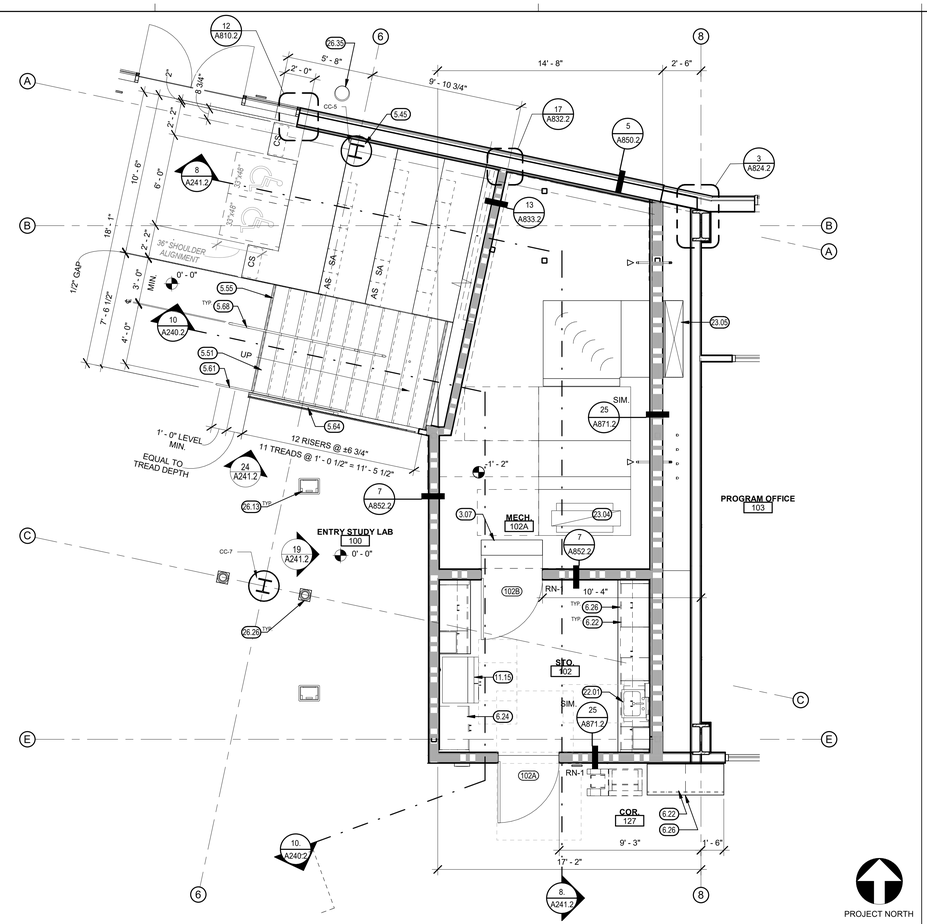

EXIT ACCESS STAIR 1 - ENLARGED FIRST FLOOR PLAN — 1/4" = 1'-0" | 8

KEYNOTES (00.00)

3.06	CONCRETE SLAB ON METAL DECK, SEE STRUCTURAL
3.07	CONCRETE STAIRS, SEE **8 / A852.2**
5.45	COLUMN ENCLOSURE, SEE **5 / A853.2**
5.51	METAL PAN STAIRS WITH CONCRETE FILLED TREADS/LANDING
5.55	NON-SLIP METAL STAIR NOSING WITH CONTRASTING COLOR STRIPE AT NOSE, TOP OF LANDING AND ALL TREADS, SEE **16 / A851.2**
5.61	HANDRAIL, TYP. SEE **2 / A852.2**
5.64	GUARDRAIL, TYP. SEE **24 / A850.2**
5.68	STAIR HANDRAIL, SEE **20 / A850.2**
5.69	GUARD AT BLEACHER STAIR, SEE **4 / A853.2**
6.22	PLASTIC LAMINATE BASE CABINET, SEE INTERIOR ELEVATIONS
6.24	PLASTIC LAMINATE TALL STORAGE CABINET, SEE INTERIOR ELEVATIONS
6.26	PLASTIC LAMINATE COUNTER TOP, SEE INTERIOR ELEVATIONS
7.31	ROOF ASSEMBLY, TYP., SEE ROOF PLAN
9.24	1-HR FIRE-RATED SHAFT WALL ASSEMBLY, UL U469 TO UNDERSIDE OF STAIR STRUCTURE AT ENCLOSED USABLE SPACE UNDER STAIRS
9.45	PERFORATED LINEAR METAL CEILING, SEE **2 / A842.2**
11.15	REFRIGERATOR/FREEZER O.F.C.I. AT LEAST 50% OF FREEZER SPACE 54" MAX. A.F.F.
22.01	ACCESSIBLE PLUMBING FIXTURE, SEE PLUMBING
23.04	MECHANICAL EQUIPMENT, SEE MECHANICAL, TYP.
23.05	DUCT, SEE MECHANICAL
23.06	WALL REGISTER, SEE MECHANICAL
26.13	RECESSED FLOOR BOX FLUSH WITH FLOOR, SEE ELECTRICAL
26.26	RECESSED LIGHT FIXTURE, SEE ELECTRICAL
26.27	RECESSED CEILING LIGHT, SEE ELECTRICAL
26.35	WAP BOLLARD, SEE ELECTRICAL

LEGEND

- MINIMUM 30"X48" WHEELCHAIR CLEAR SPACE
- MINIMUM 60" DIAMETER WHEELCHAIR TURN AROUND SPACE
- TRD-U — WALL SIGNAGE, SEE **3 / A801.2**
- 201A — DOOR REFERENCE SEE DOOR SCHEDULE ON SHEET A700.2
- XX — WINDOW REFERENCE SEE WINDOW SCHEDULE ON SHEET A701.2, A702.2, A703.2, A704.2, & 705.2
- F.E.C. — FIRE EXTINGUISHER & CABINET, SEE **26 / A863.2**
- 1 HR FIRE RATED ASSEMBLY SEE A001.2 FOR PARTITION TYPES. SEE A870.2, A871.2 AND A872.2 FOR FIRE RESISTIVE CONSTRUCTION

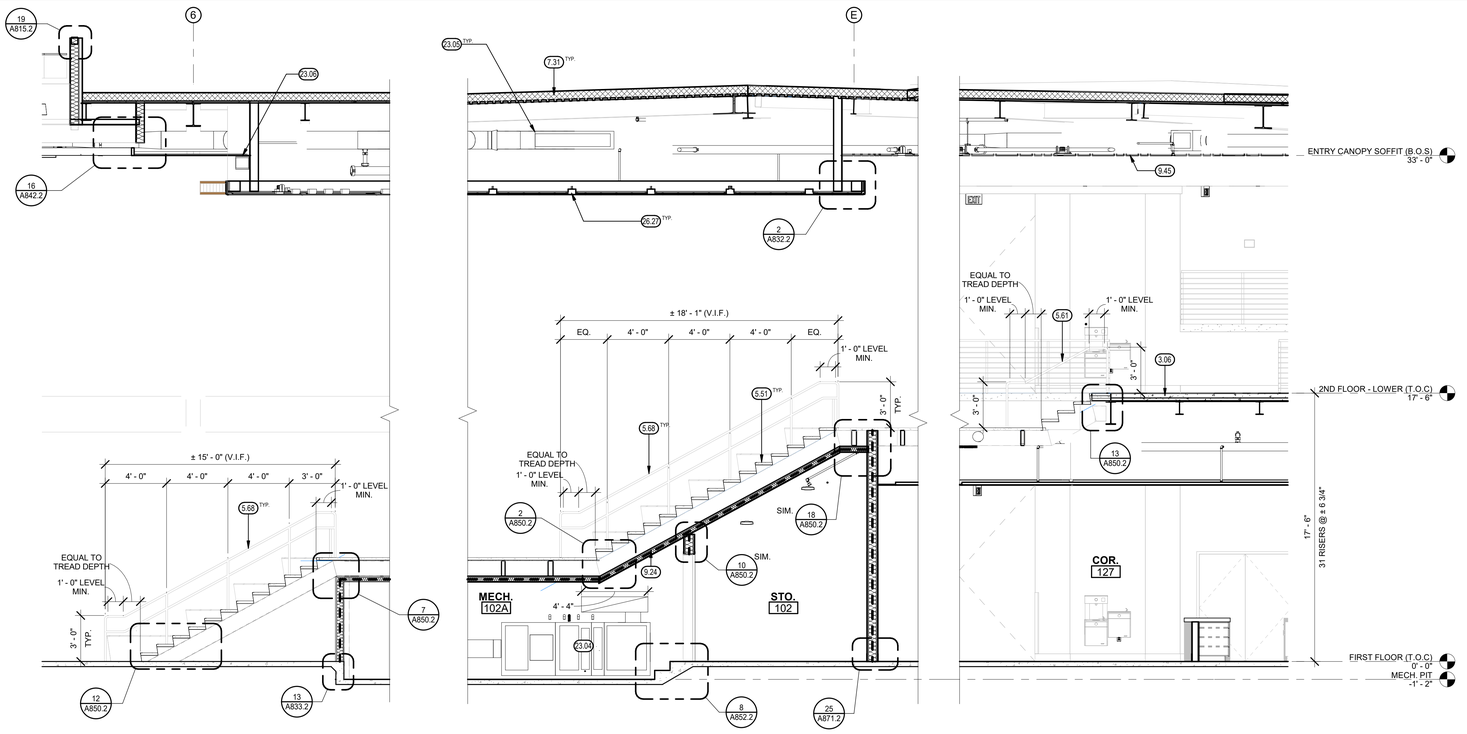

EXIT ACCESS STAIR 1 - SECTION — 1/4" = 1'-0" | 10

GENERAL NOTES

A. ALL DIMENSIONS WITH "MIN.","CLR.", ARE MEASURED FROM FACE OF WALL FINISH.

B. ACOUSTICAL INSULATION: ALL INTERIOR STUD WALLS OF THE FOLLOWING SPACES INDICATED BELOW SHALL BE INSULATED W/ ACOUSTICAL INSULATION. FOR ACOUSTICAL WALL DETAIL, SEE **11 / A866.2** , **12 / A866.2** , AND **14 / A866.2**

a. ALL WALLS & CEILING OF: PRIVATE OFFICES PROGRAM OFFICES, FACULTY LOUNGES, ELECTRICAL/ MECH. ROOMS, TOILET ROOMS, CLASSROOMS, LABS, LECTURE & MEETING ROOMS

C. FOR ACCESSIBLE DOOR MANEUVERING CLEARANCES, SEE **18 / A800.2**

IDENTIFICATION STAMP
DIV. OF THE STATE ARCHITECT
APP: 02-122821 INC: 2
REVIEWED FOR
SS ☑ FLS ☑ ACS ☑
DATE: 11/20/2025

Teter, Inc. expressly reserves its common law copyright and other property rights in these plans. This document, the ideas and designs incorporated herein, as an instrument of professional service, is not to be used in whole or in part, for any other project without prior written authorization.

MARK	DATE	DESCRIPTION
A.	11/13/2025	DSA BACKCHECK

LICENSED ARCHITECT ★ ANDREW C. TETER ★ No. C-23078 ★ STATE OF CALIFORNIA

TETER, INC.
FRESNO HEADQUARTERS
VISALIA | BAKERSFIELD | MODESTO | SAN LUIS OBISPO
ARCHITECTS ENGINEERS CONNECTED

VISALIA CAMPUS UNIVERSITY CENTER
COLLEGE OF THE SEQUOIAS - INCREMENT 2
915 S. MOONEY BLVD
VISALIA, CALIFORNIA

DRAWING TITLE
ENLARGED FLOOR PLANS - STAIRS

PROJECT NO.
22-12498

DRAWING
A240.2

\\tet-file1\Users\tara.chong_TETR\Documents\12498-A-UC_tara.chong.rvt
PLOT DATE: 11/10/2025 8:50:27 AM

\\tet-file1\Users\tara.chong_TETR\Documents\12498-A-UC_tara.chong.rvt

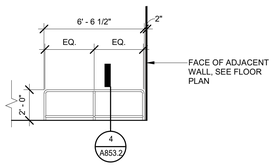

GUARD AT BLEACHER SEATING 1/4" = 1'-0" 27

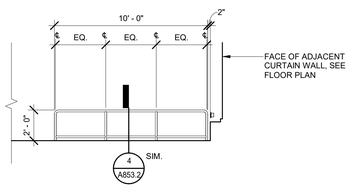

GUARD AT BLEACHER SEATING 1/4" = 1'-0" 28

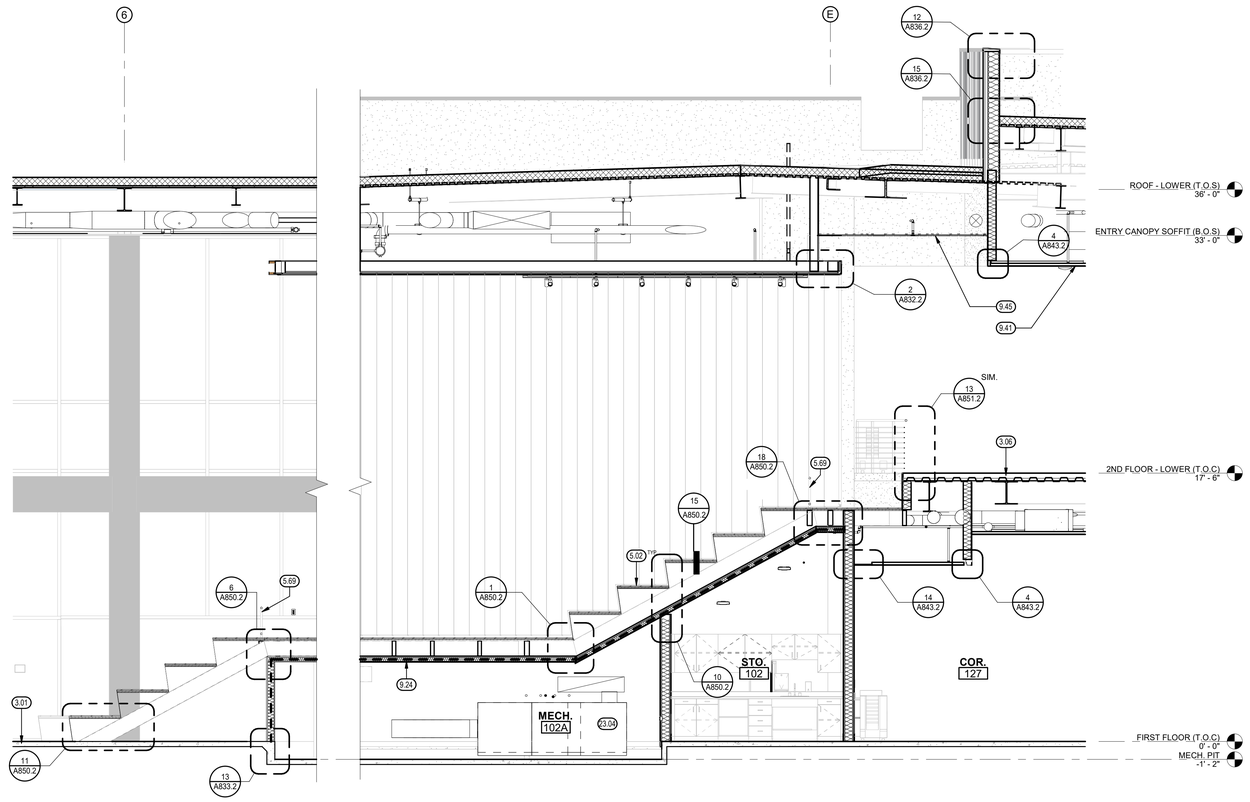

SEATING - SECTION 1/4" = 1'-0" 8

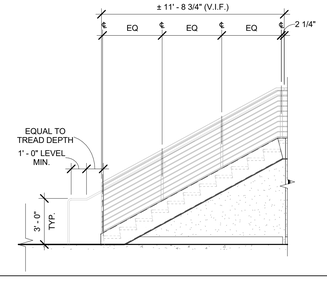

EXIT ACCESS STAIR 1 - ELEVATION 1/4" = 1'-0" 24

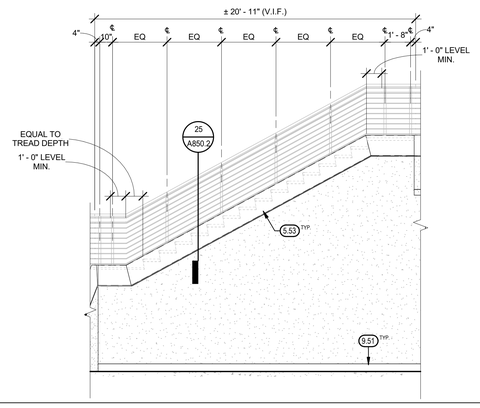

EXIT ACCESS STAIR 1 - ELEVATION 1/4" = 1'-0" 19

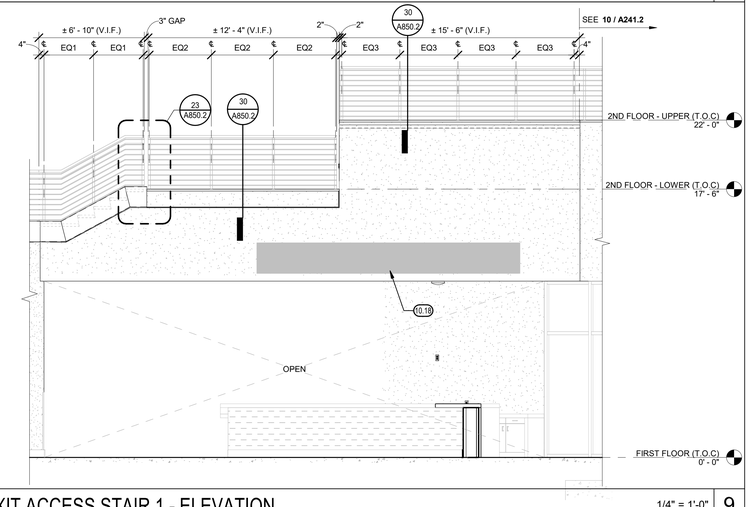

EXIT ACCESS STAIR 1 - ELEVATION 1/4" = 1'-0" 9

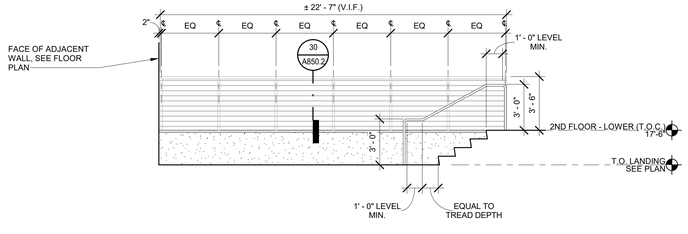

GUARDRAIL ELEVATION AT STAIR 1 LANDING 1/4" = 1'-0" 20

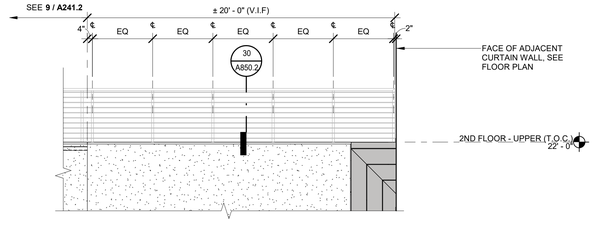

GUARDRAIL ELEVATION AT STEM LOFT & ENTRY LOBBY 1/4" = 1'-0" 10

KEYNOTES (00.00)

3.01	CONCRETE SLAB, SEE STRUCTURAL
3.06	CONCRETE SLAB ON METAL DECK, SEE STRUCTURAL
5.02	METAL FRAMED SEATING AND LANDING
5.53	EXPOSED STAIR STRINGER
5.69	GUARD AT BLEACHER STAIR, SEE **4 / A853.2**
9.24	1-HR FIRE-RATED SHAFT WALL ASSEMBLY, UL U469 TO UNDERSIDE OF STAIR STRUCTURE AT ENCLOSED USABLE SPACE UNDER STAIRS
9.41	SUSPENDED ACOUSTIC PANEL CEILING
9.45	PERFORATED LINEAR METAL CEILING, SEE **2 / A842.2**
9.51	TOPSET BASE AS SCHEDULED
10.18	LOBBY SIGNAGE, SEE **1 / A865.2**
23.04	MECHANICAL EQUIPMENT, SEE MECHANICAL, TYP.

IDENTIFICATION STAMP
DIV. OF THE STATE ARCHITECT
APP: 02-122821 INC: 2
REVIEWED FOR
SS ☑ FLS ☑ ACS ☑
DATE: 11/20/2025

Teter, Inc. expressly reserves its common law copyright and other property rights in these plans. This document, the ideas and designs incorporated herein, as an instrument of professional service, is not to be used in whole or part, for any other project without prior written authorization.

MARK	DATE	DESCRIPTION
A	11/13/2025	DSA BACKCHECK

LICENSED ARCHITECT ★ STATE OF CALIFORNIA ★ CHRISTOPHER DOUGLAS TEETER ★ Expires 08-31-2026

TETER, INC.
FRESNO HEADQUARTERS
VISALIA I BAKERSFIELD I MODESTO I SAN LUIS OBISPO
ARCHITECTS ENGINEERS CONNECTED
TETER

VISALIA CAMPUS UNIVERSITY CENTER
COLLEGE OF THE SEQUOIAS - INCREMENT 2
915 S. MOONEY BLVD
VISALIA, CALIFORNIA

DRAWING TITLE
ENLARGED FLOOR PLANS - STAIRS

PROJECT NO.
22-12498

DRAWING
A241.2

PLOT DATE: 11/10/2025 8:50:59 AM

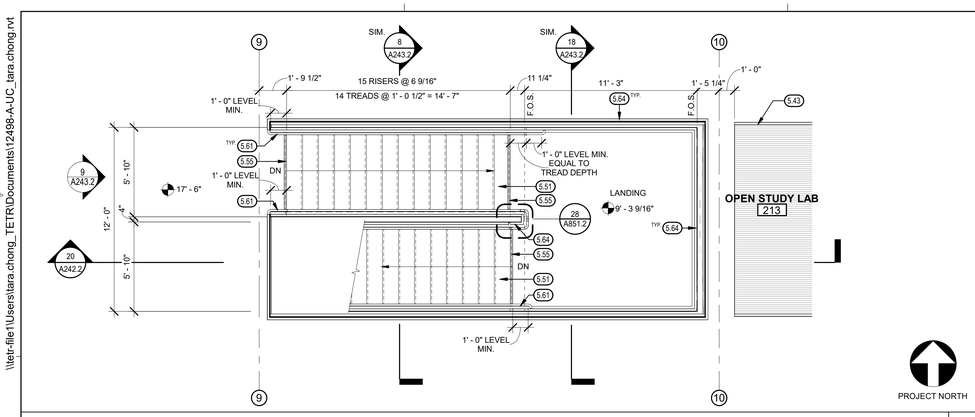

EXIT ACCESS STAIR 2 - ENLARGED FLOOR PLAN - SECOND FLOOR | 1/4" = 1'-0" | 17

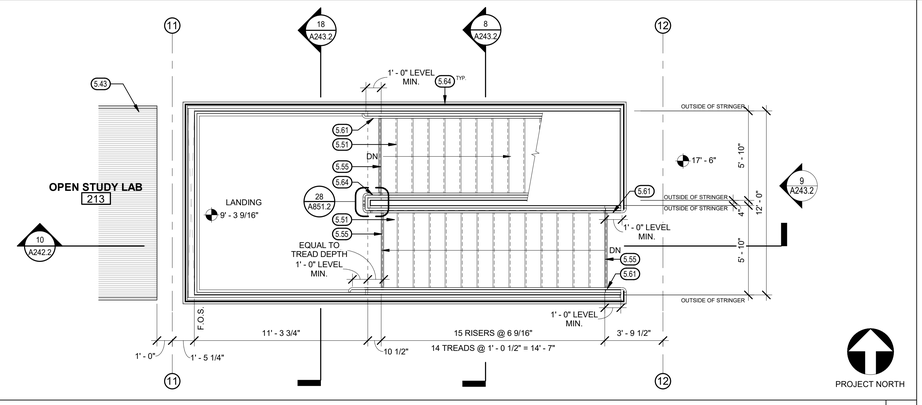

STAIR 3 ENLARGED PLAN - SECOND FLOOR | 1/4" = 1'-0" | 7

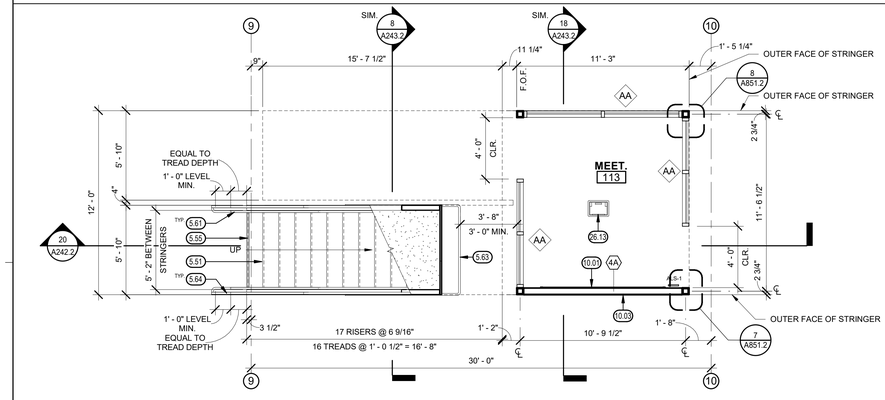

EXIT ACCESS STAIR 2 - ENLARGED FLOOR PLAN - FIRST FLOOR | 1/4" = 1'-0" | 18

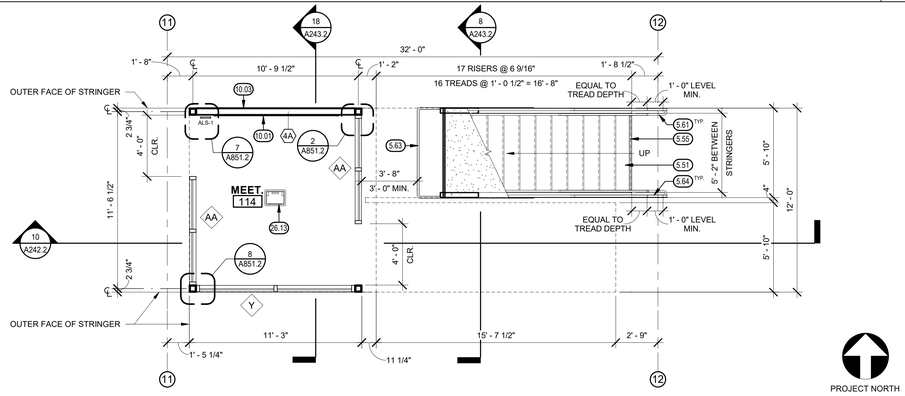

STAIR 3 ENLARGED PLAN - FIRST FLOOR | 1/4" = 1'-0" | 8

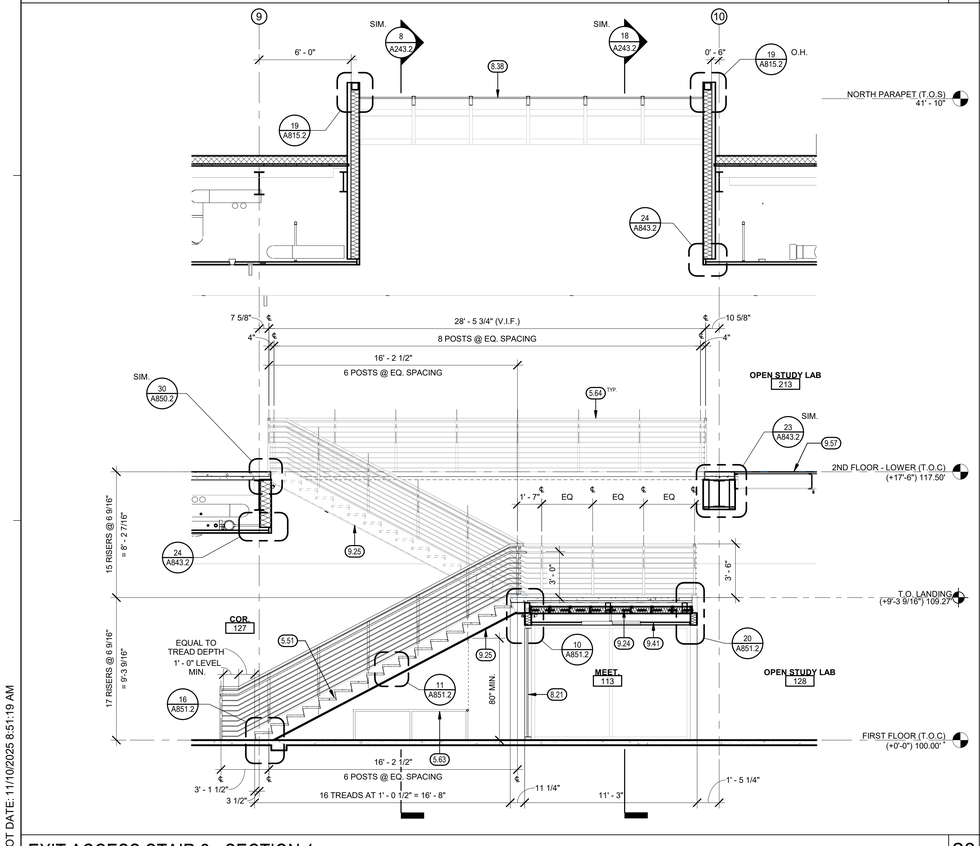

EXIT ACCESS STAIR 2 - SECTION 1 | 1/4" = 1'-0" | 20

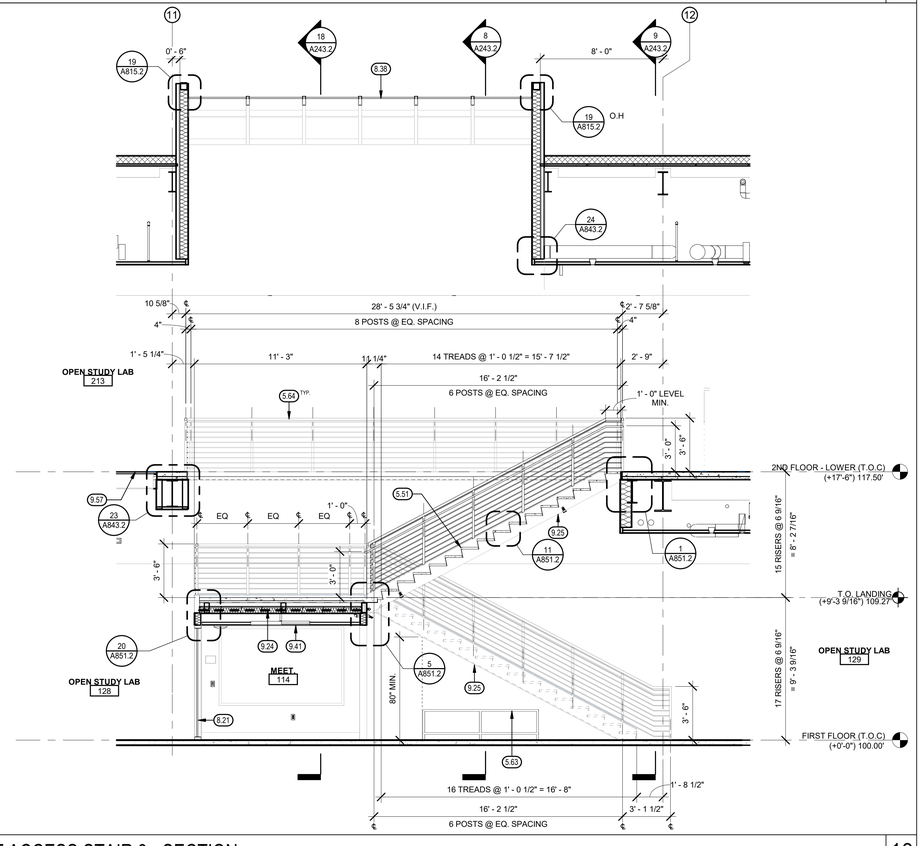

EXIT ACCESS STAIR 3 - SECTION | 1/4" = 1'-0" | 10

KEYNOTES (00.00)

5.43	METAL BAR GRATING
5.51	METAL PAN STAIRS WITH CONCRETE FILLED TREADS/LANDING
5.55	NON-SLIP METAL STAIR NOSING WITH CONTRASTING COLOR STRIPE AT NOSE, TOP OF LANDING AND ALL TREADS, SEE **16 / A851.2**
5.61	HANDRAIL, TYP. SEE **2 / A852.2**
5.63	CANE DETECTION RAILING, SEE **14 / A852.2**
5.64	GUARDRAIL, TYP. SEE **24 / A850.2**
8.21	ALUMINUM STOREFRONT, SEE WINDOW SCHEDULE
8.38	SLOPED GLAZING, SEE **4 / A815.2** & **5 / A815.2** FOR STAIR LOCATION AND **3 / A816.2** & **5 / A816.2** FOR LOBBY LOCATION
9.24	1-HR FIRE-RATED SHAFT WALL ASSEMBLY, UL U469 TO UNDERSIDE OF STAIR STRUCTURE AT ENCLOSED USABLE SPACE UNDER STAIRS
9.25	GYPSUM BOARD TO UNDERSIDE OF STAIR STRINGER, SEE **5 / A851.2**
9.41	SUSPENDED ACOUSTIC PANEL CEILING
9.57	METAL ADA BAR GRATING
10.01	MARKER BOARD, SEE **20 / A863.2**
10.03	TACKBOARD, FRAMED
26.13	RECESSED FLOOR BOX FLUSH WITH FLOOR, SEE ELECTRICAL

LEGEND

- MINIMUM 30"X48" WHEELCHAIR CLEAR SPACE
- MINIMUM 60" DIAMETER WHEELCHAIR TURN AROUND SPACE
- TBD-H — WALL SIGNAGE, SEE **3 / A801.2**
- 201A — DOOR REFERENCE SEE DOOR SCHEDULE ON SHEET A700.2
- XX — WINDOW REFERENCE SEE WINDOW SCHEDULE ON SHEET A701.2, A702.2, A703.2, A704.2, & 705.2
- F.E.C. — FIRE EXTINGUISHER & CABINET, SEE **26 / A863.2**
- 1 HR FIRE RATED ASSEMBLY SEE A001.2 FOR PARTITION TYPES. SEE A870.2, A871.2 AND A872.2 FOR FIRE RESISTIVE CONSTRUCTION

GENERAL NOTES

A. ALL DIMENSIONS WITH "MIN.","CLR.", ARE MEASURED FROM FACE OF WALL FINISH.

B. ACOUSTICAL INSULATION: ALL INTERIOR STUD WALLS OF THE FOLLOWING SPACES INDICATED BELOW SHALL BE INSULATED W/ ACOUSTICAL INSULATION. FOR ACOUSTICAL WALL DETAIL, SEE **11 / A866.2** , **12 / A866.2** , AND **14 / A866.2**

   a. ALL WALLS & CEILING OF: PRIVATE OFFICES PROGRAM OFFICES, FACULTY LOUNGES, ELECTRICAL/ MECH. ROOMS, TOILET ROOMS, CLASSROOMS, LABS, LECTURE & MEETING ROOMS

C. FOR ACCESSIBLE DOOR MANEUVERING CLEARANCES, SEE **18 / A800.2**

IDENTIFICATION STAMP
DIV. OF THE STATE ARCHITECT
APP: 02-122821 INC: 2
REVIEWED FOR
SS ☑ FLS ☑ ACS ☑
DATE: 11/20/2025

Teter, Inc. expressly reserves its common law copyright and other property rights in these plans. This document, the ideas and designs incorporated herein, as an instrument of professional service, is not to be used in whole or in part, for any other project without prior written authorization.

MARK	DATE	DESCRIPTION
A.	11/13/2025	DSA BACKCHECK

LICENSED ARCHITECT — REGISTERED PROFESSIONAL ENGINEER — STATE OF CALIFORNIA

TETER, INC.
ARCHITECTS ENGINEERS CONNECTED
FRESNO HEADQUARTERS
VISALIA | BAKERSFIELD | MODESTO | SAN LUIS OBISPO

VISALIA CAMPUS UNIVERSITY CENTER
COLLEGE OF THE SEQUOIAS - INCREMENT 2
915 S. MOONEY BLVD
VISALIA, CALIFORNIA

DRAWING TITLE
ENLARGED FLOOR PLANS - STAIRS

PROJECT NO.
22-12498

DRAWING
A242.2

PLOT DATE: 11/10/2025 8:51:19 AM

\\tet-file1\Users\tara.chong_TETR\Documents\12498-A-UC_tara.chong.rvt

\\tet-file1\Users\tara.chong_TETR\Documents\12498-A-UC_tara.chong.rvt

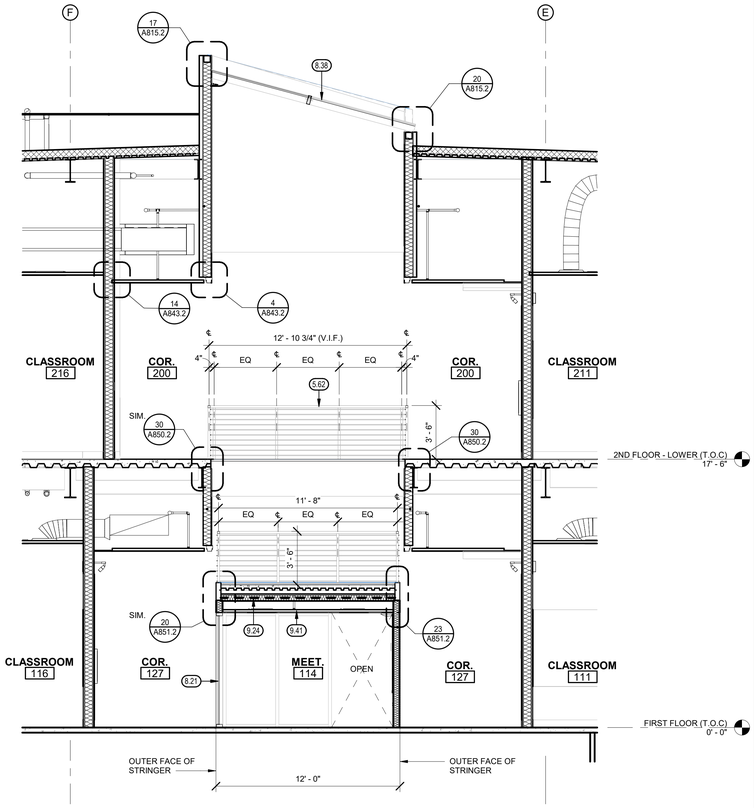

EXIT ACCESS STAIR 3 - SECTION 1/4" = 1'-0" | 18

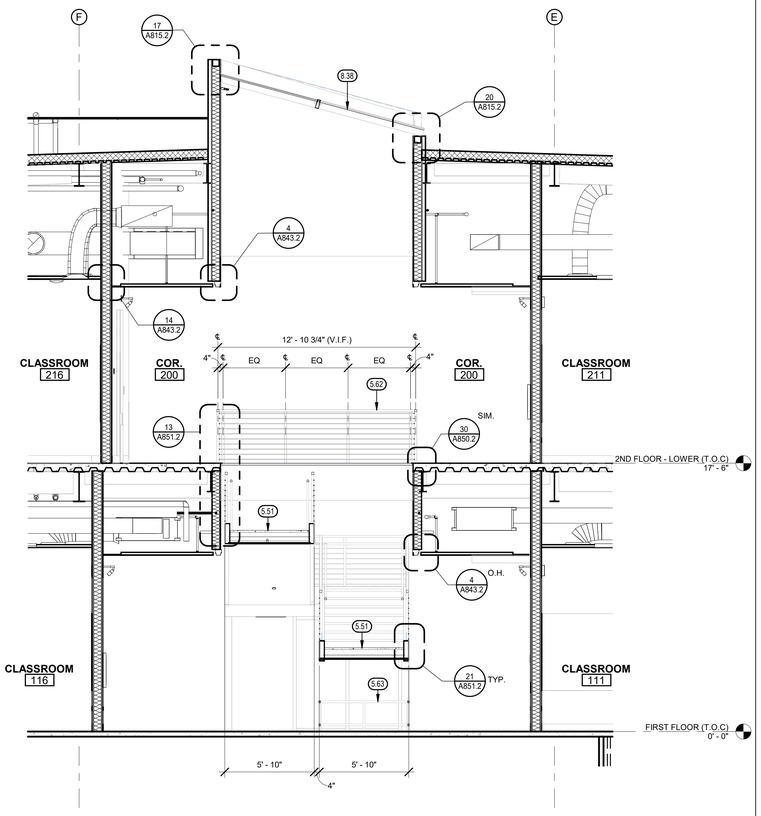

EXIT ACESS STAIR 3 - SECTION 1/4" = 1'-0" | 8

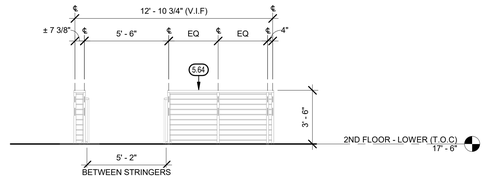

EXIT ACCESS STAIR 2 & 3 GUARDRAIL ELEVATION 1/4" = 1'-0" | 9

KEYNOTES (00.00)

5.51	METAL PAN STAIRS WITH CONCRETE FILLED TREADS/LANDING
5.62	GUARDRAIL AT PLATFORM, TYP. SEE ELEVATION
5.63	CANE DETECTION RAILING, SEE **14 / A852.2**
5.64	GUARDRAIL, TYP. SEE **24 / A850.2**
8.21	ALUMINUM STOREFRONT, SEE WINDOW SCHEDULE
8.38	SLOPED GLAZING, SEE **4 / A815.2** & **5 / A815.2** FOR STAIR LOCATION AND **3 / A816.2** & **5 / A816.2** FOR LOBBY LOCATION
9.24	1-HR FIRE-RATED SHAFT WALL ASSEMBLY, UL U469 TO UNDERSIDE OF STAIR STRUCTURE AT ENCLOSED USABLE SPACE UNDER STAIRS
9.41	SUSPENDED ACOUSTIC PANEL CEILING

IDENTIFICATION STAMP
DIV. OF THE STATE ARCHITECT
APP: 02-122821 INC: 2
REVIEWED FOR
SS ☑ FLS ☑ ACS ☑
DATE: 11/20/2025

Teter, Inc. expressly reserves its common law copyright and other property rights in these plans. This document, the ideas and designs incorporated herein, as an instrument of professional service, is not to be used in whole or in part, for any other project without prior written authorization.

MARK	DATE	DESCRIPTION
A	11/13/2025	DSA BACKCHECK

LICENSED ARCHITECT STATE OF CALIFORNIA

TETER, INC.
FRESNO HEADQUARTERS
VISALIA | BAKERSFIELD | MODESTO | SAN LUIS OBISPO
ARCHITECTS ENGINEERS CONNECTED

VISALIA CAMPUS UNIVERSITY CENTER
COLLEGE OF THE SEQUOIAS - INCREMENT 2
915 S. MOONEY BLVD
VISALIA, CALIFORNIA

DRAWING TITLE
STAIRS - SECTIONS

PROJECT NO.
22-12498

DRAWING
A243.2

PLOT DATE: 11/10/2025 8:51:33 AM

\\tet-file1\Users\tara.chong_TETR\Documents\12498-A-UC_tara.chong.rvt

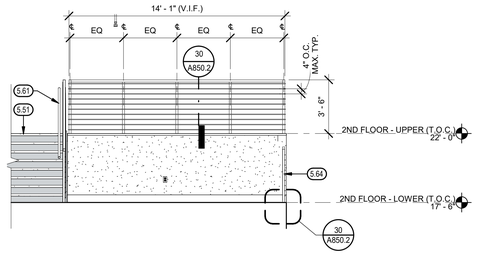

STEM LOFT GUARDRAIL ELEVATION 1/4" = 1'-0" 21

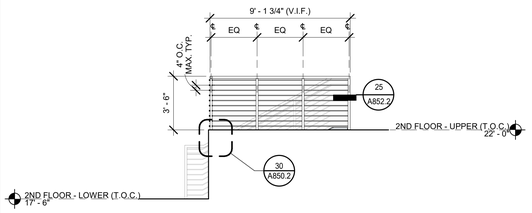

STEM LOFT GUARDRAIL ELEVATION 1/4" = 1'-0" 22

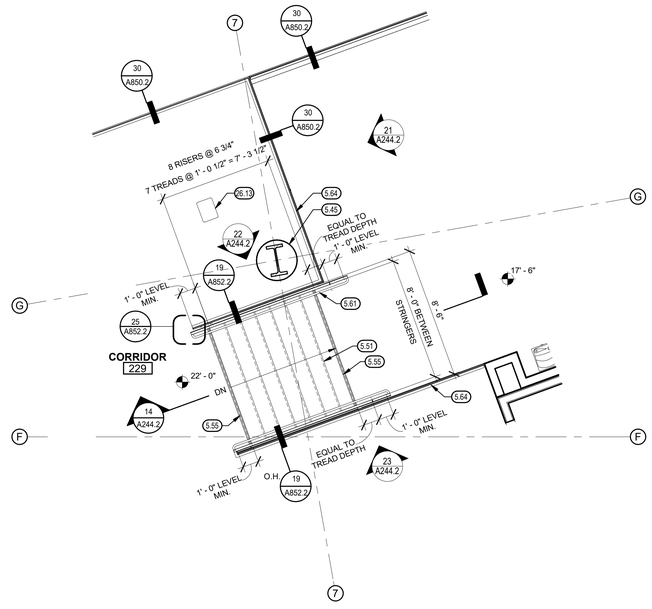

EXIT ACCESS STAIR 5 - ENLARGED FLOOR PLAN 1/4" = 1'-0" 12

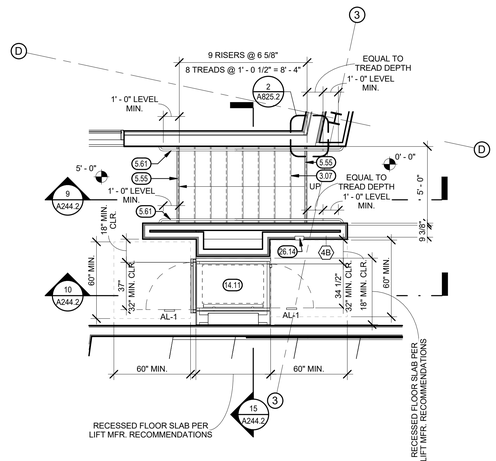

NOTE:
1. PLATFORM LIFT DESIGN AND CONSTRUCTION SHALL COMPLY WITH CBC CHAPTER 11B-410 & ASME A18.1

EXIT ACCESS STAIR 4 - ENLARGED FLOOR PLAN 1/4" = 1'-0" 7



STEM LOFT GUARDRAIL ELEVATION 1/4" = 1'-0" 23

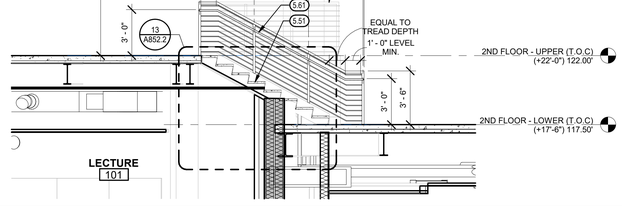

EXIT ACCESS STAIR 5 - SECTION 1/4" = 1'-0" 14

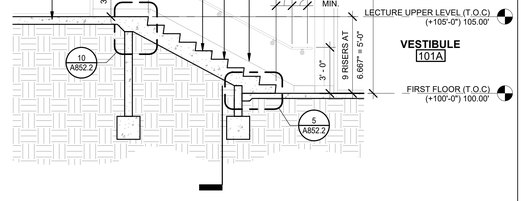

EXIT ACCESS STAIR 4 - SECTION 1/4" = 1'-0" 9

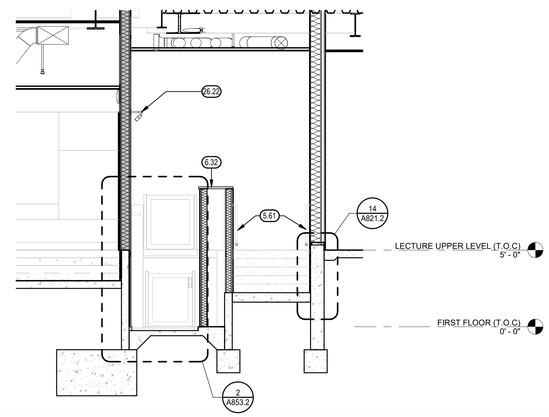

PLATFORM LIFT AND STAIRS SECTION 1/4" = 1'-0" 15

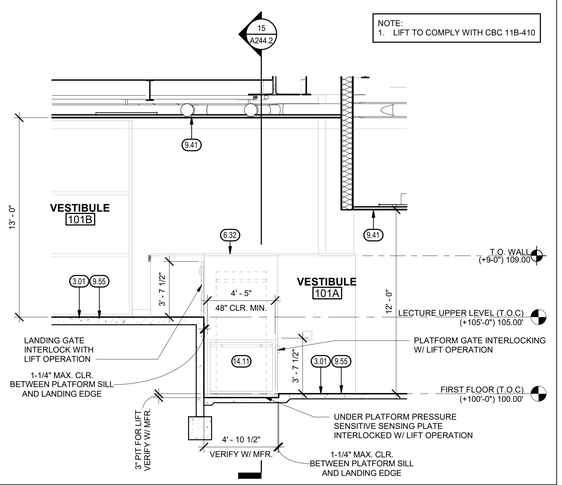

ACCESSIBLE LIFT - SECTION 1 1/4" = 1'-0" 10

KEYNOTES (00.00)

3.01	CONCRETE SLAB, SEE STRUCTURAL
3.07	CONCRETE STAIRS, SEE **9 / A244.2**
5.45	COLUMN ENCLOSURE, SEE **7 / A826.2**
5.51	METAL PAN STAIRS WITH CONCRETE FILLED TREADS/LANDING
5.55	NON-SLIP METAL STAIR NOSING WITH CONTRASTING COLOR STRIPE AT NOSE, TOP OF LANDING AND ALL TREADS, SEE **4 / A852.2**
5.61	HANDRAIL, TYP. SEE **9 / A852.2** & **2 / A852.2**
5.64	GUARDRAIL, TYP. SEE **24 / A850.2**
6.32	SOLID SURFACE SILL, SEE **14 / A864.2**
9.41	SUSPENDED ACOUSTIC PANEL CEILING
9.51	TOPSET BASE AS SCHEDULED
9.55	CARPETING AS SCHEDULED
14.11	WHEELCHAIR LIFT, SEE **2 / A853.2**
26.13	RECESSED FLOOR BOX FLUSH WITH FLOOR, SEE ELECTRICAL
26.14	WHEELCHAIR LIFT DISCONNECT, SEE ELECTRICAL AND **17 / A853.2**
26.22	WALL MOUNTED LIGHT FIXTURE, SEE ELECTRICAL

LEGEND

- MINIMUM 30"X48" WHEELCHAIR CLEAR SPACE
- MINIMUM 60" DIAMETER WHEELCHAIR TURN AROUND SPACE
- TRD-U — WALL SIGNAGE, SEE **3 / A801.2**
- 201A — DOOR REFERENCE SEE DOOR SCHEDULE ON SHEET A700.2
- XX — WINDOW REFERENCE SEE WINDOW SCHEDULE ON SHEET A701.2, A702.2, A703.2, A704.2, & 705.2
- F.E.C. — FIRE EXTINGUISHER & CABINET, SEE **26 / A863.2**
- 1 HR FIRE RATED ASSEMBLY SEE A001.2 FOR PARTITION TYPES. SEE A870.2, A871.2 AND A872.2 FOR FIRE RESISTIVE CONSTRUCTION

IDENTIFICATION STAMP
DIV. OF THE STATE ARCHITECT
APP: 02-122821 INC: 2
REVIEWED FOR
SS ☑ FLS ☑ ACS ☑
DATE: 11/20/2025

Teter, Inc. expressly reserves its common law copyright and other property rights in these plans. This document, the ideas and designs incorporated herein, as an instrument of professional service, is not to be used in whole or in part, for any other project without prior written authorization.

MARK	DATE	DESCRIPTION
A	11/13/2025	DSA BACKCHECK

LICENSED ARCHITECT REGISTERED PROFESSIONAL ENGINEER CONSTRUCTION INSPECTOR STATE OF CALIFORNIA

TETER, INC.
FRESNO HEADQUARTERS
VISALIA | BAKERSFIELD | MODESTO | SAN LUIS OBISPO
ARCHITECTS ENGINEERS CONNECTED

VISALIA CAMPUS UNIVERSITY CENTER
COLLEGE OF THE SEQUOIAS - INCREMENT 2
915 S. MOONEY BLVD
VISALIA, CALIFORNIA

DRAWING TITLE
ENLARGED FLOOR PLANS - STAIRS

PROJECT NO.
22-12498

DRAWING
A244.2

PLOT DATE: 11/10/2025 8:51:55 AM

\\tet-file1\Users\tara.chong_TETR\Documents\12498-A-UC_tara.chong.rvt

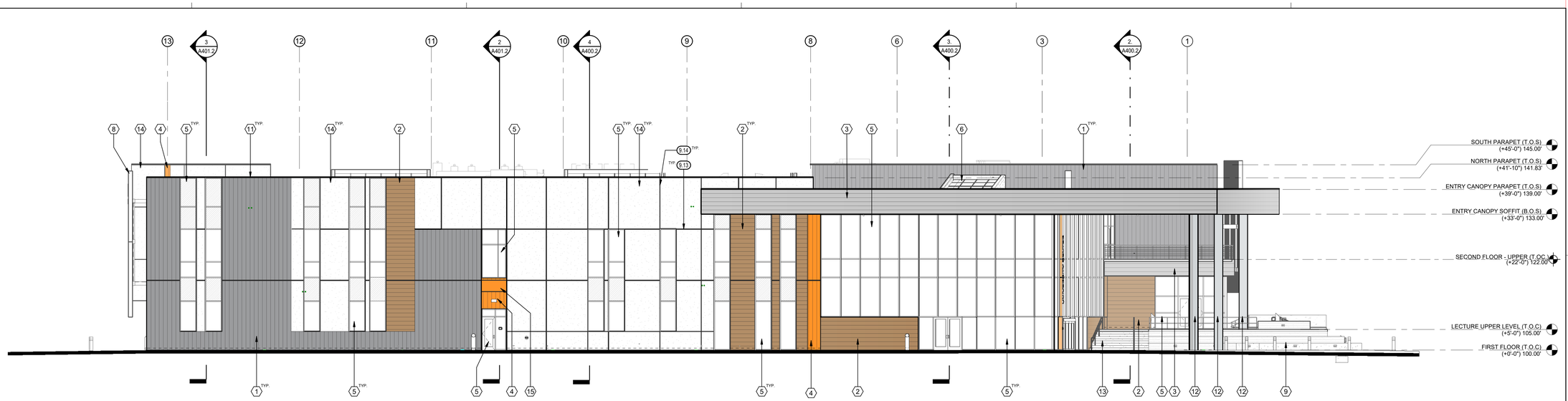

NORTH ELEVATION

3/32" = 1'-0" | 2

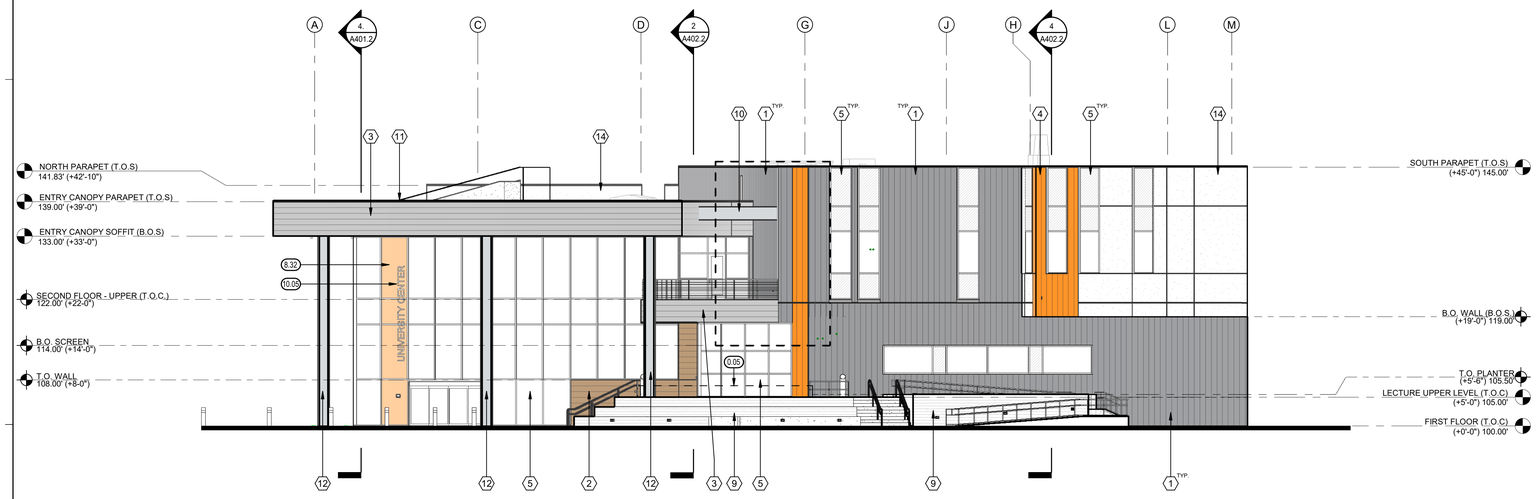

WEST ELEVATION WITHOUT SCREEN

3/32" = 1'-0" | 14

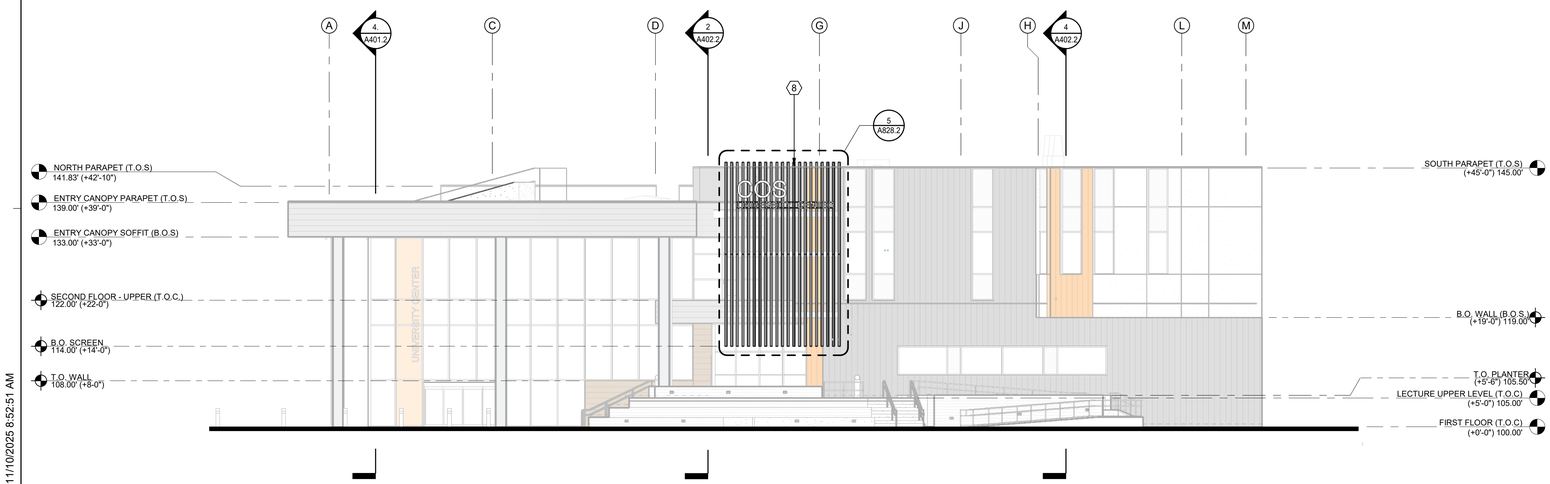

WEST ELEVATION WITH SCREEN

3/32" = 1'-0" | 15

KEYNOTES

0.05	RAISED PLANTER PROFILE
8.32	TINTED GLAZING, SEE WINDOW SCHEDULE
9.13	CEMENT PLASTER HORIZONTAL CONTROL JOINT, SEE **12 / A820.2**
9.14	CEMENT PLASTER VERTICAL CONTROL JOINT, SEE **13 / A820.2**
10.05	VINYL LETTERING

EXTERIOR FINISH SCHEDULE

MARK	ITEM	MFR/PRODUCT (BASIS OF DESIGN)	DESCRIPTION / FINISH	COLOR
1	METAL PANEL 1	PAC-CLAD, REPEAT SERIES OF 5 BOX RIB PANELS (BR2, BR2, BR4, BR2,BR3, SEE **1 / A820.2**), VERTICAL	CONCEALED PANEL CLIP, FACTORY FINISH	SLATE GRAY
2	METAL PANEL 2	PAC-CLAD, FLUSH PANEL 12", HORIZONTAL (BROWN)	CONCEALED FASTENERS, FACTORY FINISH	BROWN TIMBER
3	METAL PANEL 3	PAC-CLAD, FLUSH PANEL 12", HORIZONTAL (SILVER)	CONCEALED FASTENERS, FACTORY FINISH	SILVERSMITH
4	METAL PANEL 4	PAC-CLAD, BOX RIB 4, VERTICAL (CUSTOM ORANGE)	CONCEALED PANEL CLIP, FACTORY FINISH	CUSTOM ORANGE
5	CURTAIN WALL SYSTEM	KAWNEER 1600 UT SYSTEM 2	FACTORY FINISH, KYNAR	GRAY
6	SLOPED GLAZING	KAWNEER 1600	CLEAR ANODIZED, FACTORY FINISH	
7	HOLLOW METAL DOORS AND FRAMES	--	PAINT	ORANGE
8	VERTICAL BRISE SOLEIL	AGS INC. VERTICAL FINS	ALUMINUM, PAINT	GRAY
9	BOARD FORMED CONCRETE	--	--	
10	BEAM COVER	PITTCON INDUSTRIES	ALUMINUM, FACTORY FINISH, CLEAR ANODIZED	
11	COPING	--	--	
12	COLUMN COVER	PITTCON INDUSTRIES	ALUMINUM, FACTORY FINISH, CLEAR ANODIZED	
13	CAST IN PLACE CONCRETE STAIRS	--	--	
14	CEMENT PLASTER	--	PAINT	WHITE
15	BEAM COVER	PITTCON INDUSTRIES	ALUMINUM, FACTORY FINISH, CLEAR ANODIZED	ORANGE

NOTE: FINAL COLOR SELECTION TO BE MADE BY ARCHITECT.

IDENTIFICATION STAMP
DIV. OF THE STATE ARCHITECT
APP: 02-122821 INC: 2
REVIEWED FOR
SS ☑ FLS ☑ ACS ☑
DATE: 11/20/2025

Teter, Inc. expressly reserves its common law copyright and other property rights in these plans. This document, the ideas and designs incorporated herein, as an instrument of professional service, is not to be used in whole or in part, for any other project without prior written authorization.

MARK	DATE	DESCRIPTION
A.	11/13/2025	DSA BACKCHECK

LICENSED ARCHITECT ★ STANDARD OF CARE ★ STATE OF CALIFORNIA

TETER, INC.
FRESNO HEADQUARTERS
VISALIA | BAKERSFIELD | MODESTO | SAN LUIS OBISPO
ARCHITECTS ENGINEERS CONNECTED

VISALIA CAMPUS UNIVERSITY CENTER
COLLEGE OF THE SEQUOIAS - INCREMENT 2
915 S. MOONEY BLVD
VISALIA, CALIFORNIA

DRAWING TITLE
EXTERIOR ELEVATIONS

PROJECT NO.
22-12498

DRAWING
A300.2

PLOT DATE: 11/10/2025 8:52:51 AM

\\tet-file1\Users\tara.chong_TETR\Documents\12498-A-UC_tara.chong.rvt

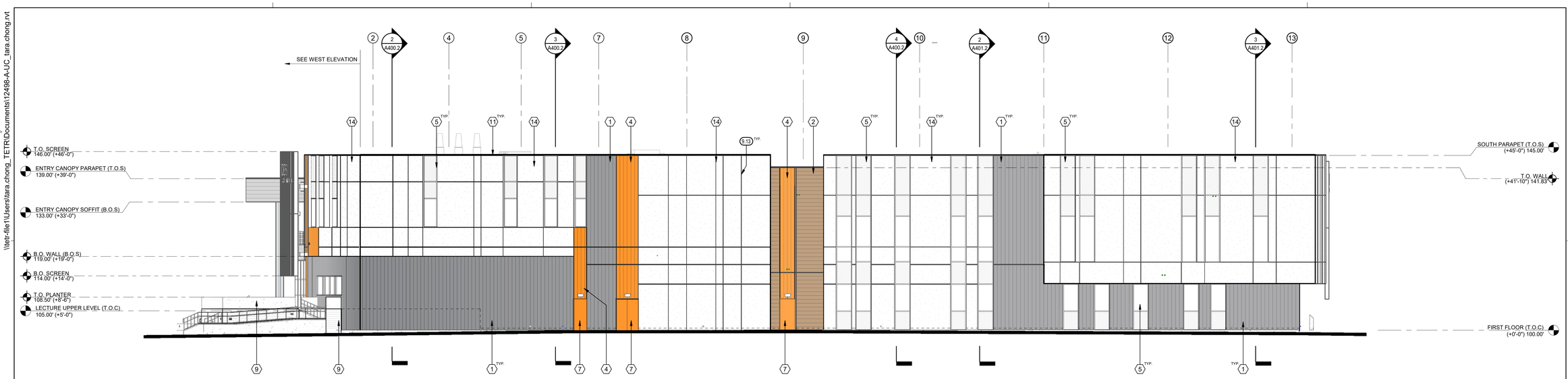

SOUTH ELEVATION — 3/32" = 1'-0" — 2

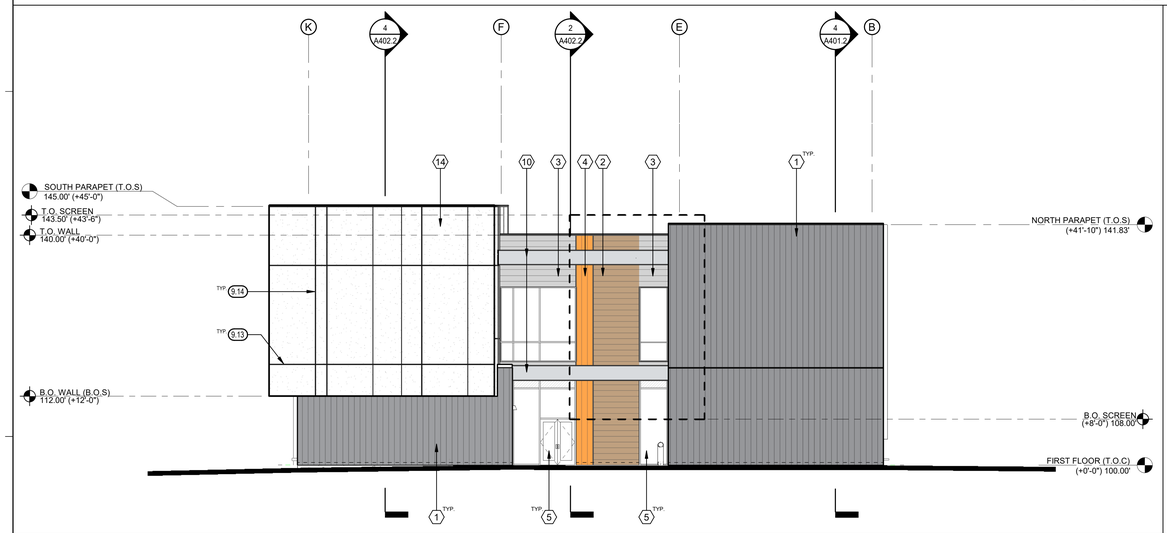

EAST ELEVATION WITHOUT SCREEN — 3/32" = 1'-0" — 19

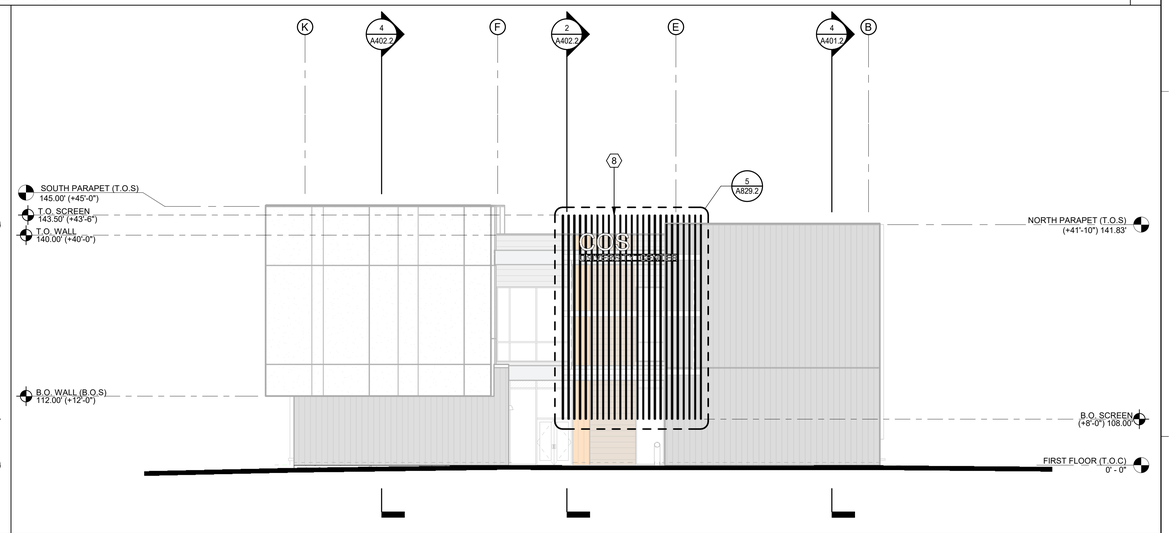

EAST ELEVATION WITH SCREEN — 3/32" = 1'-0" — 4

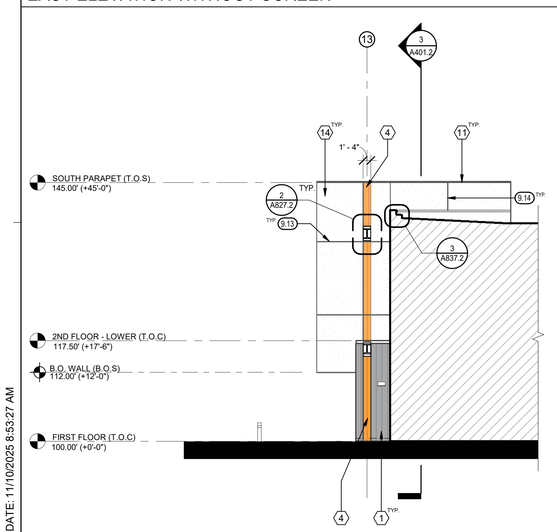

PARTIAL NORTH ELEVATION — 3/32" = 1'-0" — 25

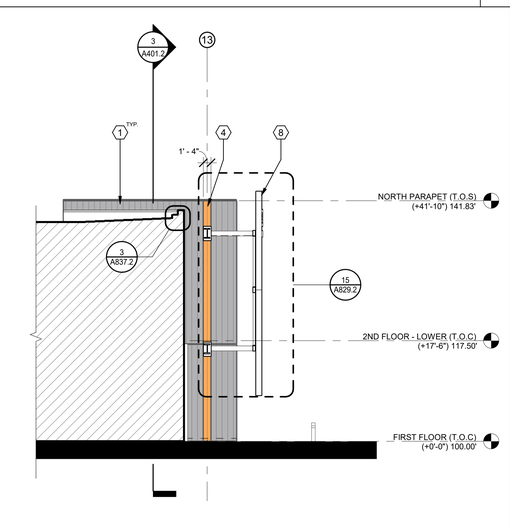

PARTIAL SOUTH ELEVATION — 3/32" = 1'-0" — 20

KEYNOTES

9.13	CEMENT PLASTER HORIZONTAL CONTROL JOINT, SEE **12 / A820.2**
9.14	CEMENT PLASTER VERTICAL CONTROL JOINT, SEE **13 / A820.2**

EXTERIOR FINISH SCHEDULE

MARK	ITEM	MFR/PRODUCT (BASIS OF DESIGN)	DESCRIPTION / FINISH	COLOR
1	METAL PANEL 1	PAC-CLAD, REPEAT SERIES OF 5 BOX RIB PANELS (BR2, BR2, BR4, BR2,BR3, SEE **1 / A820.2**), VERTICAL	CONCEALED PANEL CLIP, FACTORY FINISH	SLATE GRAY
2	METAL PANEL 2	PAC-CLAD, FLUSH PANEL 12", HORIZONTAL (BROWN)	CONCEALED FASTENERS, FACTORY FINISH	BROWN TIMBER
3	METAL PANEL 3	PAC-CLAD, FLUSH PANEL 12", HORIZONTAL (SILVER)	CONCEALED FASTENERS, FACTORY FINISH	SILVERSMITH
4	METAL PANEL 4	PAC-CLAD, BOX RIB 4, VERTICAL (CUSTOM ORANGE)	CONCEALED PANEL CLIP, FACTORY FINISH	CUSTOM ORANGE
5	CURTAIN WALL SYSTEM	KAWNEER 1600 UT SYSTEM 2	FACTORY FINISH, KYNAR	GRAY
6	SLOPED GLAZING	KAWNEER 1600	CLEAR ANODIZED, FACTORY FINISH	
7	HOLLOW METAL DOORS AND FRAMES	--	PAINT	ORANGE
8	VERTICAL BRISE SOLEIL	AGS INC. VERTICAL FINS	ALUMINUM, PAINT	GRAY
9	BOARD FORMED CONCRETE	--	--	
10	BEAM COVER	PITTCON INDUSTRIES	ALUMINUM, FACTORY FINISH, CLEAR ANODIZED	
11	COPING	--	--	
12	COLUMN COVER	PITTCON INDUSTRIES	ALUMINUM, FACTORY FINISH, CLEAR ANODIZED	
13	CAST IN PLACE CONCRETE STAIRS	--	--	
14	CEMENT PLASTER	--	PAINT	WHITE
15	BEAM COVER	PITTCON INDUSTRIES	ALUMINUM, FACTORY FINISH, CLEAR ANODIZED	ORANGE

NOTE: FINAL COLOR SELECTION TO BE MADE BY ARCHITECT.

IDENTIFICATION STAMP
DIV. OF THE STATE ARCHITECT
APP: 02-122821 INC: 2
REVIEWED FOR
SS ☑ FLS ☑ ACS ☑
DATE: 11/20/2025

Teter, Inc. expressly reserves its statutory law copyright and other property rights in these plans. This document, the ideas and designs incorporated herein, as an instrument of professional service, is not to be used in whole or in part, for any other project without prior written authorization.

MARK	DATE	DESCRIPTION
A.	11/13/2025	DSA BACKCHECK

TETER, INC.
ARCHITECTS ENGINEERS CONNECTED
FRESNO HEADQUARTERS
VISALIA | BAKERSFIELD | MODESTO | SAN LUIS OBISPO
TETER

VISALIA CAMPUS UNIVERSITY CENTER
COLLEGE OF THE SEQUOIAS - INCREMENT 2
915 S. MOONEY BLVD
VISALIA, CALIFORNIA

DRAWING TITLE
EXTERIOR ELEVATIONS

PROJECT NO.
22-12498

DRAWING
A301.2

PLOT DATE: 11/10/2025 8:53:27 AM

\\tet-file1\Users\tara.chong_TETR\Documents\12498-A-UC_tara.chong.rvt

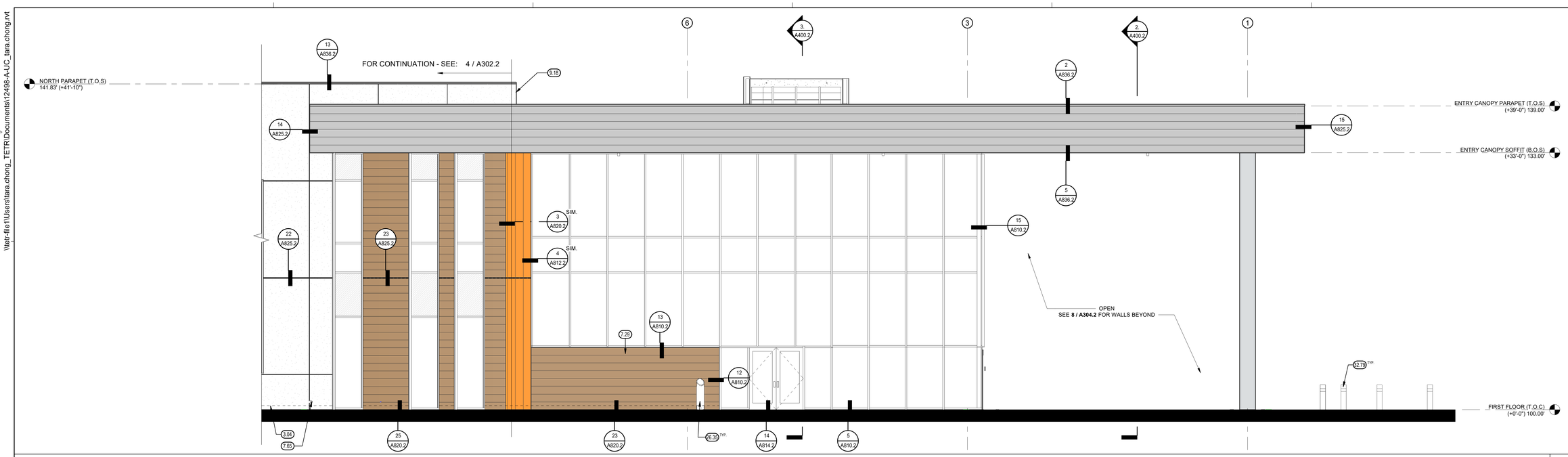

ENLARGED PARTIAL ELEVATION -NORTH

3/16" = 1'-0" | 2

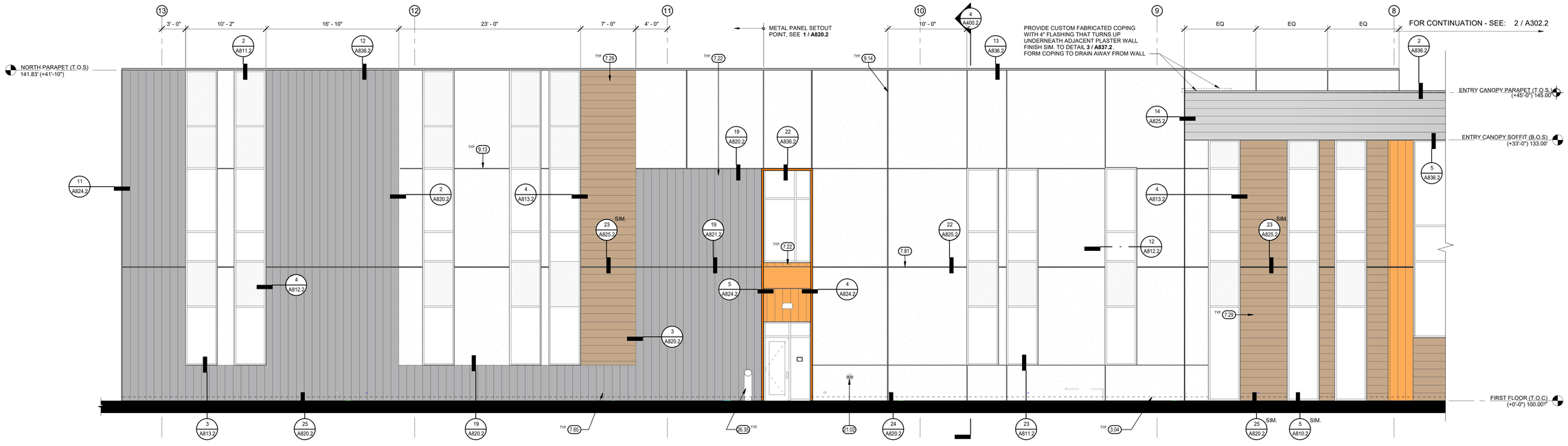

ENLARGED PARTIAL ELEVATION - NORTH

3/16" = 1'-0" | 4

KEYNOTES (30.00)

3.04	CONCRETE CURB AT WALL
7.22	METAL WALL PANEL, VERTICAL SEE **1 / A820.2**
7.29	METAL WALL PANEL, HORIZONTAL
7.65	OVERFLOW, SEE PLUMBING AND **13 / A835.2** AND **14 / A835.2**
7.81	HORIZONTAL EXPANSION JOINT, SEE **19 / A821.2** AND **22 / A825.2**
9.13	CEMENT PLASTER HORIZONTAL CONTROL JOINT, SEE **12 / A820.2**
9.14	CEMENT PLASTER VERTICAL CONTROL JOINT, SEE **13 / A820.2**
9.18	CONTINUE PLASTER FINISH AROUND CORNER DOWN TO +39'-3" +/- W/ SHEET METAL FLASHING BELOW OVER SINGLE PLY ROOF WALL FLASHING, SEE PARAPET DETAIL
21.02	FIRE DEPARTMENT CONNECTION, SEE FIRE PROTECTION
26.35	WAP BOLLARD, SEE ELECTRICAL
32.79	MANUFACTURED BOLLARD, SEE 6/132.2

PLOT DATE: 11/10/2025 8:53:43 AM

IDENTIFICATION STAMP
DIV. OF THE STATE ARCHITECT
APP: 02-122821 INC: 2
REVIEWED FOR
SS ☑ FLS ☑ ACS ☑
DATE: 11/20/2025

Teter, Inc. expressly reserves its common law copyright and other property rights in these plans. This document, the ideas and designs incorporated herein, as an instrument of professional service, is not to be used in whole or part, for any other project without prior written authorization.

MARK	DATE	DESCRIPTION
A	11/13/2025	DSA BACKCHECK

LICENSED ARCHITECT ★ STANDARD OF CONFORMANCE ★ CONFORMED COPY ★ SIGNATURE ★ STATE OF CALIFORNIA

TETER, INC.
ARCHITECTS ENGINEERS CONNECTED
FRESNO HEADQUARTERS
VISALIA | BAKERSFIELD | MODESTO | SAN LUIS OBISPO

TETER

VISALIA CAMPUS UNIVERSITY CENTER
COLLEGE OF THE SEQUOIAS - INCREMENT 2
915 S. MOONEY BLVD
VISALIA, CALIFORNIA

DRAWING TITLE
ENLARGED EXTERIOR ELEVATIONS

PROJECT NO.
22-12498

DRAWING
A302.2

\\tet-file1\Users\tara.chong_TETR\Documents\12498-A-UC_tara.chong.rvt

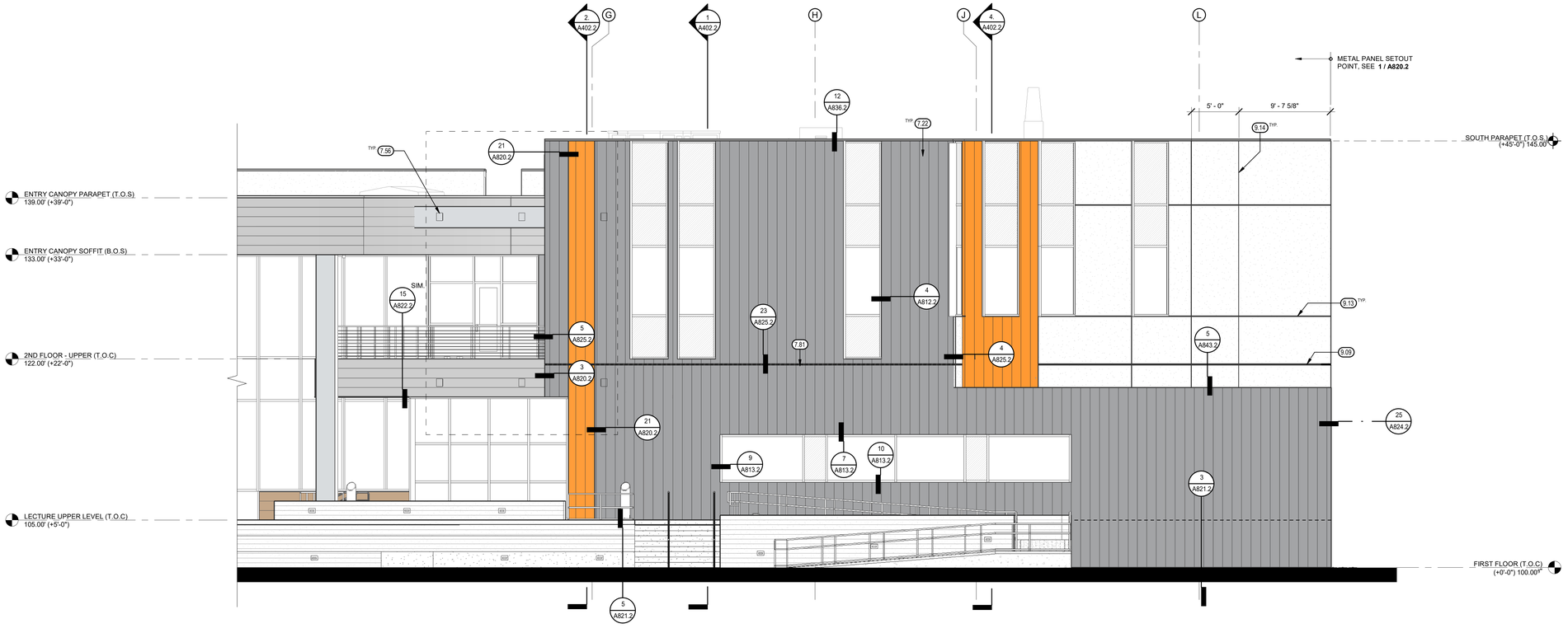

ENLARGED WEST ELEVATION A — 3/16" = 1'-0" | 8

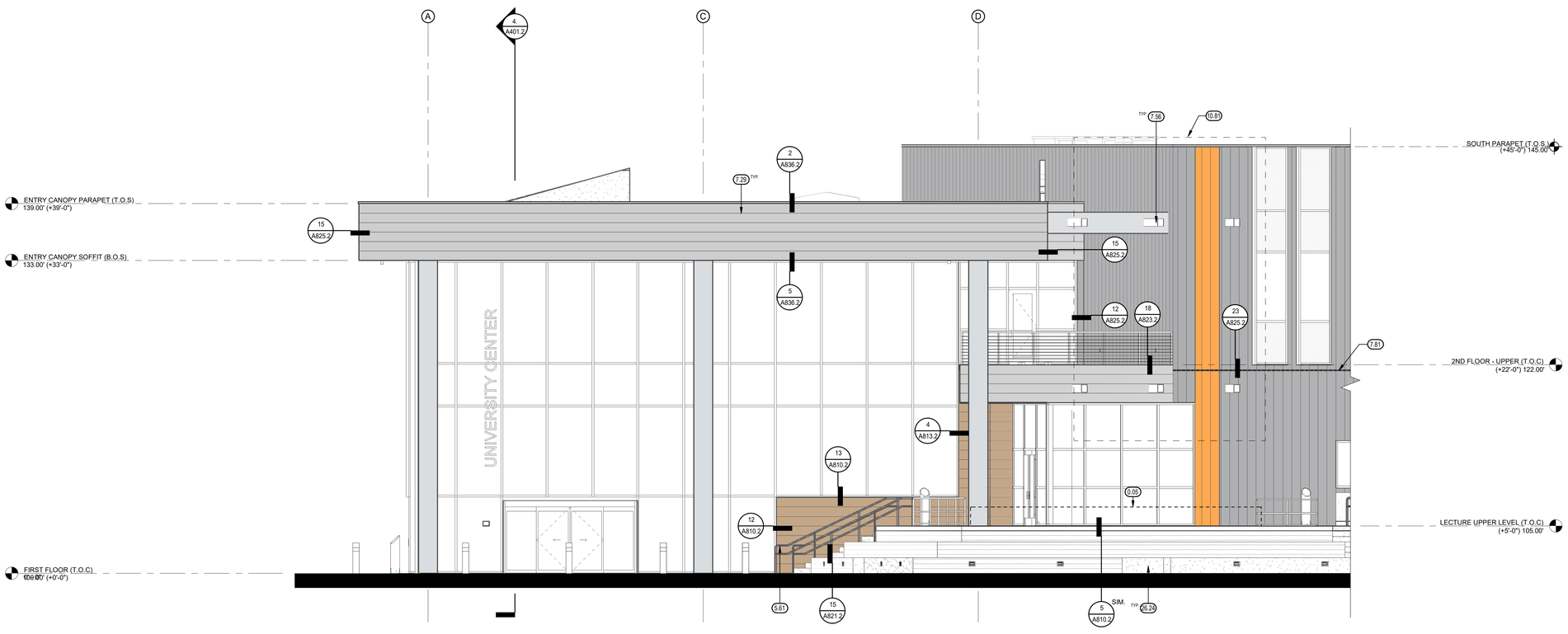

ENLARGED ELEVATION WEST ENTRY CANOPY — 3/16" = 1'-0" | 10

KEYNOTES (0.00)

0.05	RAISED PLANTER PROFILE
5.61	HANDRAIL, TYP. SEE **22 / A134.2**
7.22	METAL WALL PANEL, VERTICAL SEE **1 / A820.2**
7.29	METAL WALL PANEL, HORIZONTAL
7.56	SEE **5 / A826.2** & **3 / A837.2** FOR WALL FLASHING AT PENETRATIONS
7.81	HORIZONTAL EXPANSION JOINT, SEE **23 / A825.2**
9.09	1" CEMENT PLASTER HORIZONTAL CONTROL JOINT
9.13	CEMENT PLASTER HORIZONTAL CONTROL JOINT, SEE **12 / A820.2**
9.14	CEMENT PLASTER VERTICAL CONTROL JOINT, SEE **13 / A820.2**
10.81	VERTICAL BRISE SOLEIL, SEE **5 / A828.2**
26.24	STEP LIGHTING, SEE ELECTRICAL

IDENTIFICATION STAMP
DIV. OF THE STATE ARCHITECT
APP: 02-122821 INC: 2
REVIEWED FOR
SS ☑ FLS ☑ ACS ☑
DATE: 11/20/2025

Teter, Inc. expressly reserves its common law copyright and other property rights in these plans. This document, the ideas and designs incorporated herein, as an instrument of professional service, is not to be used in whole or in part, for any other project without prior written authorization.

MARK	DATE	DESCRIPTION
A.	11/13/2025	DSA BACKCHECK

LICENSED ARCHITECT ★ STATE OF CALIFORNIA ★ CONSTRUCTION CONTRACTOR

TETER, INC.
FRESNO HEADQUARTERS
VISALIA | BAKERSFIELD | MODESTO | SAN LUIS OBISPO
ARCHITECTS ENGINEERS CONNECTED
TETER

VISALIA CAMPUS UNIVERSITY CENTER
COLLEGE OF THE SEQUOIAS - INCREMENT 2
915 S. MOONEY BLVD
VISALIA, CALIFORNIA

DRAWING TITLE
ENLARGED EXTERIOR ELEVATIONS

PROJECT NO.
22-12498

DRAWING
A303.2

PLOT DATE: 11/10/2025 8:54:10 AM

\\tet-file1\Users\tara.chong_TETR\Documents\12498-A-UC_tara.chong.rvt

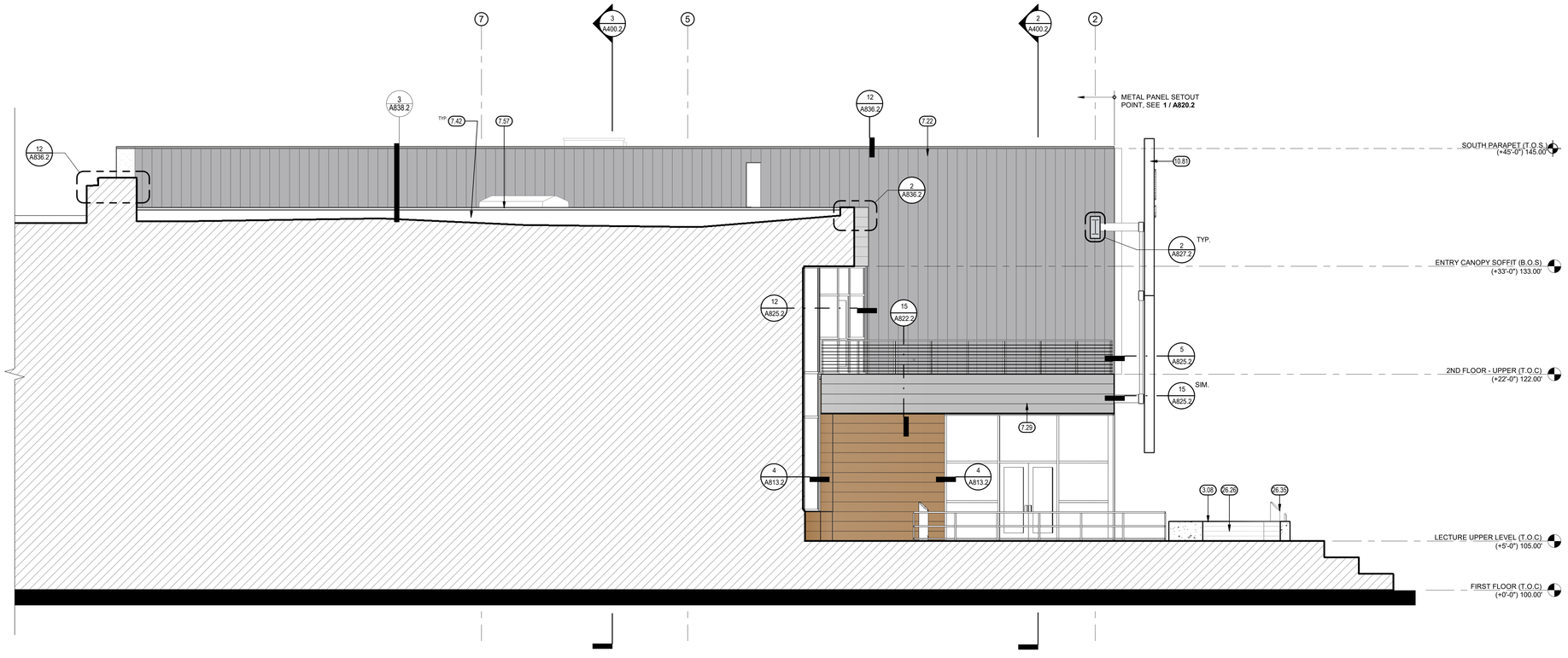

ENLARGED PARTIAL NORTH ELEVATION - ALONG GRID LINE G

3/16" = 1'-0" | 8

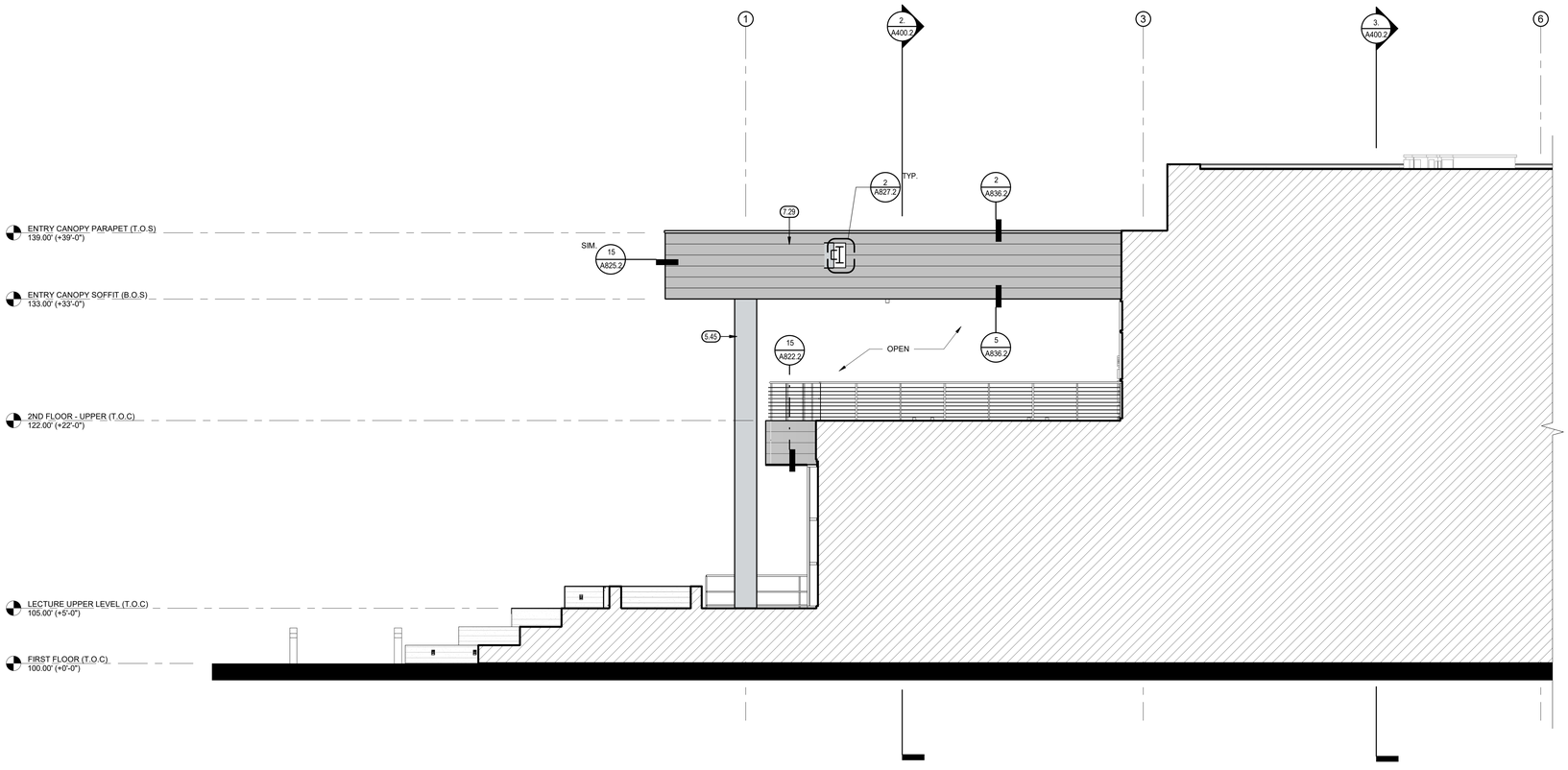

ENLARGED PARTIAL SOUTH ELEVATION - 8 FEET FROM GRID LINE D

3/16" = 1'-0" | 10

KEYNOTES (00.00)

3.08	BOARD FORMED CONCRETE PLANTER, SEE **17 / A134.2**
5.45	COLUMN ENCLOSURE, SEE **7 / A826.2**
7.22	METAL WALL PANEL, VERTICAL SEE **1 / A820.2**
7.29	METAL WALL PANEL, HORIZONTAL
7.42	SINGLE-PLY ROOF WALL FLASHING
7.57	SHT. MTL. WALL FLASHING (+/-39' - 3" AT TOP)
10.81	VERTICAL BRISE SOLEIL, SEE **15 / A828.2**
26.26	RECESSED LIGHT FIXTURE, SEE ELECTRICAL
26.35	WAP BOLLARD, SEE ELECTRICAL

IDENTIFICATION STAMP
DIV. OF THE STATE ARCHITECT
APP: 02-122821 INC: 2
REVIEWED FOR
SS ☑ FLS ☑ ACS ☑
DATE: 11/20/2025

Teter, Inc. expressly reserves its common law copyright and other property rights in these plans. This document, the ideas and designs incorporated herein, as an instrument of professional service, is not to be used in whole or in part, for any other project without prior written authorization.

MARK	DATE	DESCRIPTION
A	11/13/2025	DSA BACKCHECK

LICENSED ARCHITECT ★ STATE OF CALIFORNIA ★ CONSULTANT ★ CHRISTOPHER J. CARLSON ★ EXPIRES 08-31-2026

TETER, INC.
FRESNO HEADQUARTERS
VISALIA | BAKERSFIELD | MODESTO | SAN LUIS OBISPO
ARCHITECTS ENGINEERS CONNECTED

VISALIA CAMPUS UNIVERSITY CENTER
COLLEGE OF THE SEQUOIAS - INCREMENT 2
915 S. MOONEY BLVD
VISALIA, CALIFORNIA

DRAWING TITLE
ENLARGED EXTERIOR ELEVATIONS

PROJECT NO.
22-12498

DRAWING
A304.2

PLOT DATE: 11/10/2025 8:54:26 AM

\\tet-file1\Users\tara.chong_TETR\Documents\12498-A-UC_tara.chong.rvt

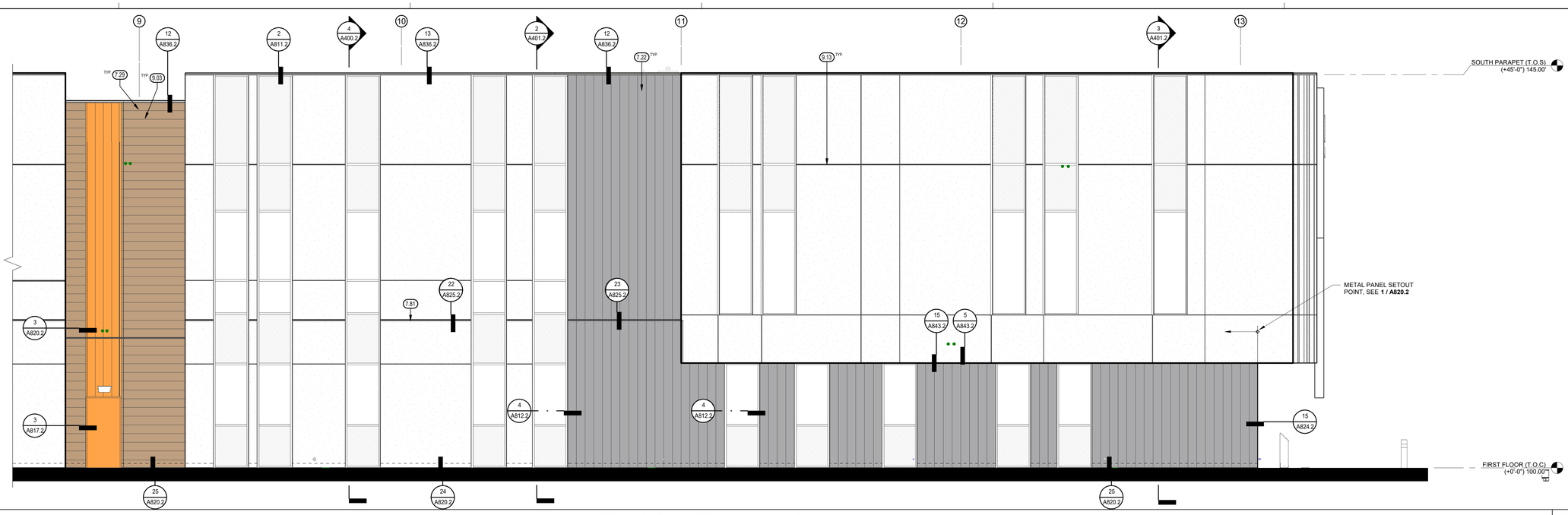

ENLARGED PARTIAL SOUTH ELEVATION

3/16" = 1'-0" | 2

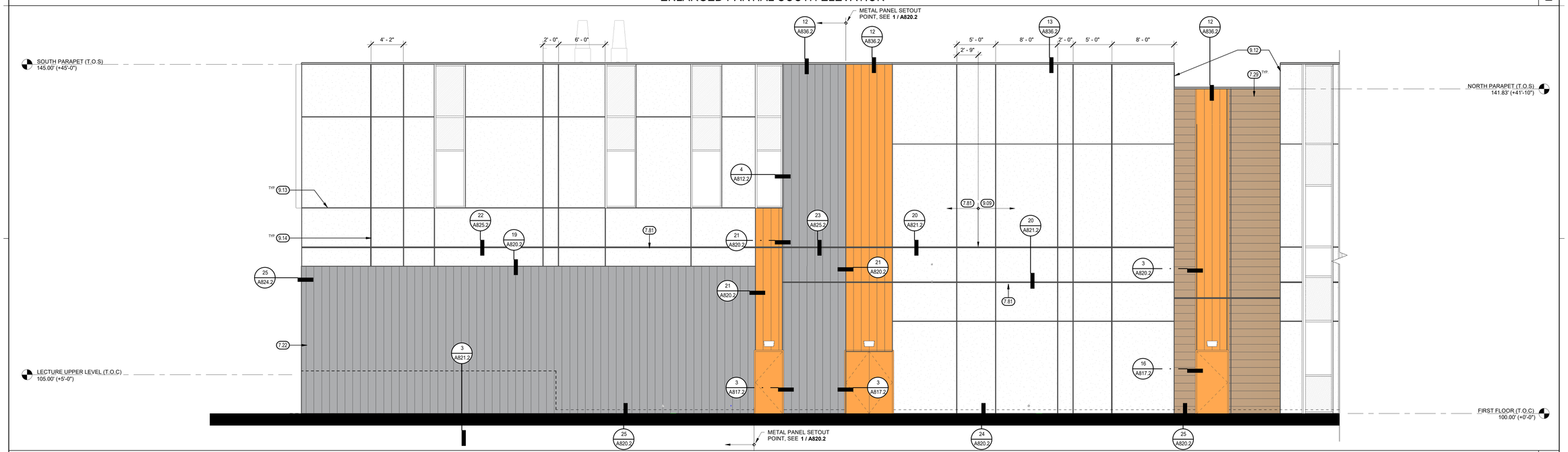

ENLARGED PARTIAL SOUTH ELEVATION

3/16" = 1'-0" | 4

KEYNOTES (30.00)

7.22	METAL WALL PANEL, VERTICAL SEE **1 / A820.2**
7.29	METAL WALL PANEL, HORIZONTAL
7.81	HORIZONTAL EXPANSION JOINT, SEE **20 / A821.2**, **22 / A825.2** & **23 / A825.2**
9.03	PHENOLIC WALL J CHANNEL BY MFR., PAINT BLACK PRIOR TO INSTALLTION
9.09	1" CEMENT PLASTER HORIZONTAL CONTROL JOINT
9.12	CONTINUE PLASTER FINISH AROUND CORNER TO END OR OPENING IN PARAPET. PROVIDE SHT. MTL. FLASHING WITH TOP AT +42'-1" +/- WITH SINGLE PLY WALL FLASHING BELOW. SEE ROOF PLAN & PARAPET DETAILS.
9.13	CEMENT PLASTER HORIZONTAL CONTROL JOINT, SEE **12 / A820.2**
9.14	CEMENT PLASTER VERTICAL CONTROL JOINT, SEE **13 / A820.2**

PLOT DATE: 11/10/2025 8:54:50 AM

IDENTIFICATION STAMP
DIV. OF THE STATE ARCHITECT
APP: 02-122821 INC: 2
REVIEWED FOR
SS ☑ FLS ☑ ACS ☑
DATE: 11/20/2025

Teter, Inc. expressly reserves its statutory law copyright and other property rights in these plans. This document, the ideas and designs incorporated herein, as an instrument of professional service, is not to be used in whole or in part, for any other project without prior written authorization.

MARK	DATE	DESCRIPTION
A	11/13/2025	DSA BACKCHECK

LICENSED ARCHITECT ★ STATE OF CALIFORNIA ★ CHRISTOPHER CONRAD LAMPERT ★ No. C-32620

TETER, INC.
FRESNO HEADQUARTERS
VISALIA | BAKERSFIELD | MODESTO | SAN LUIS OBISPO
ARCHITECTS ENGINEERS CONNECTED

TETER

VISALIA CAMPUS UNIVERSITY CENTER
COLLEGE OF THE SEQUOIAS - INCREMENT 2
915 S. MOONEY BLVD
VISALIA, CALIFORNIA

DRAWING TITLE
ENLARGED EXTERIOR ELEVATIONS

PROJECT NO.
22-12498

DRAWING
A305.2

\\tet-file1\Users\tara.chong_TETR\Documents\12498-A-UC_tara.chong.rvt

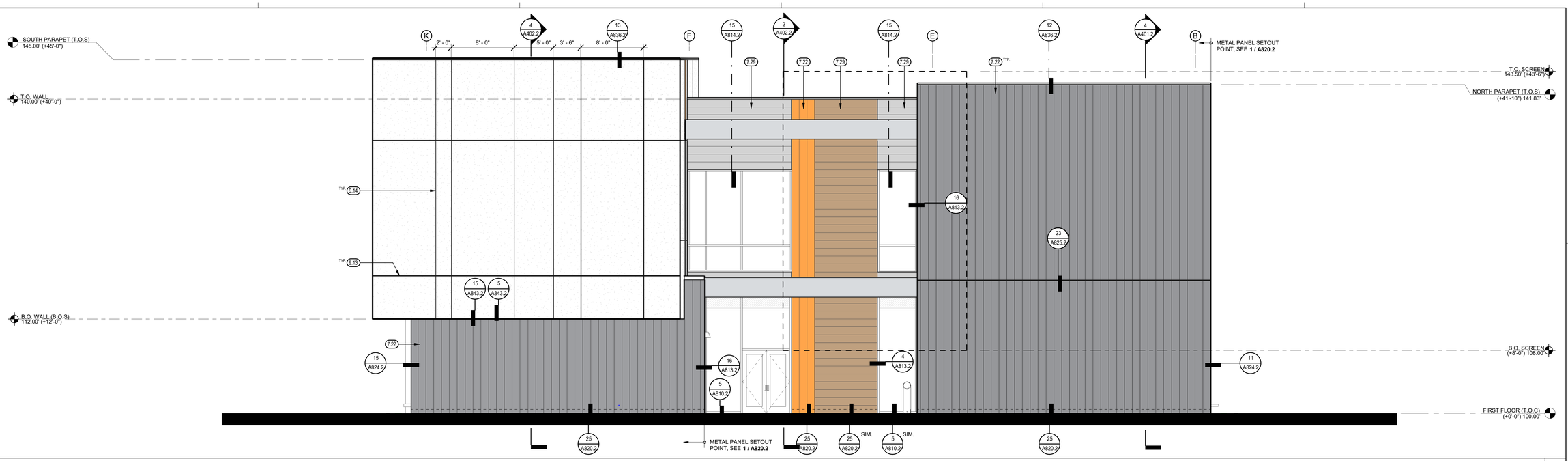

ENLARGED EAST ELEVATION — 3/16" = 1'-0" | 2

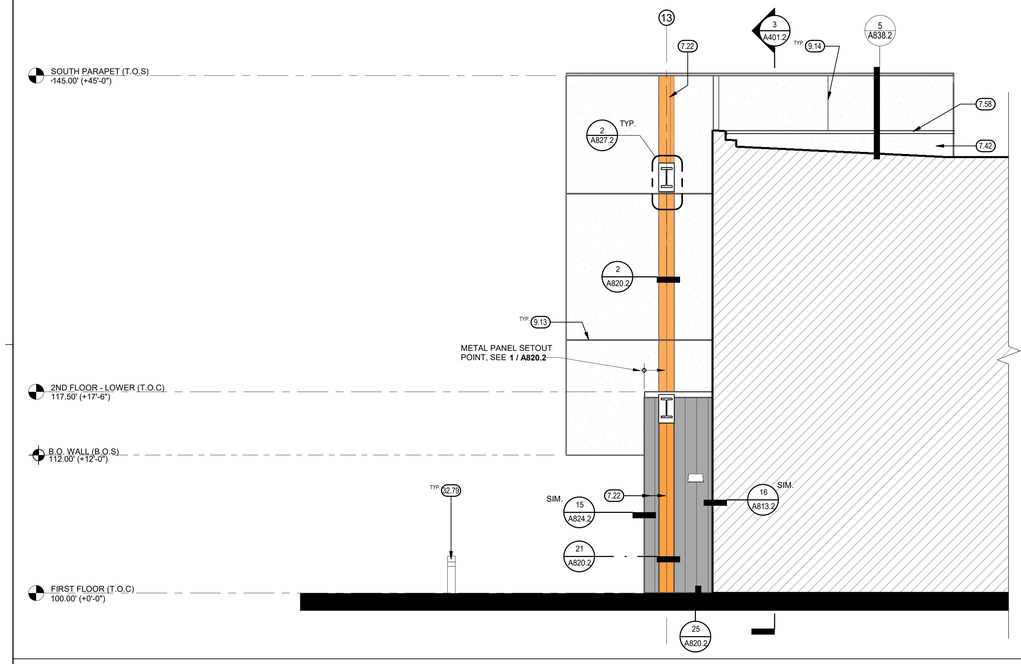

ENLARGED PARTIAL NORTH ELEVATION — 3/16" = 1'-0" | 19

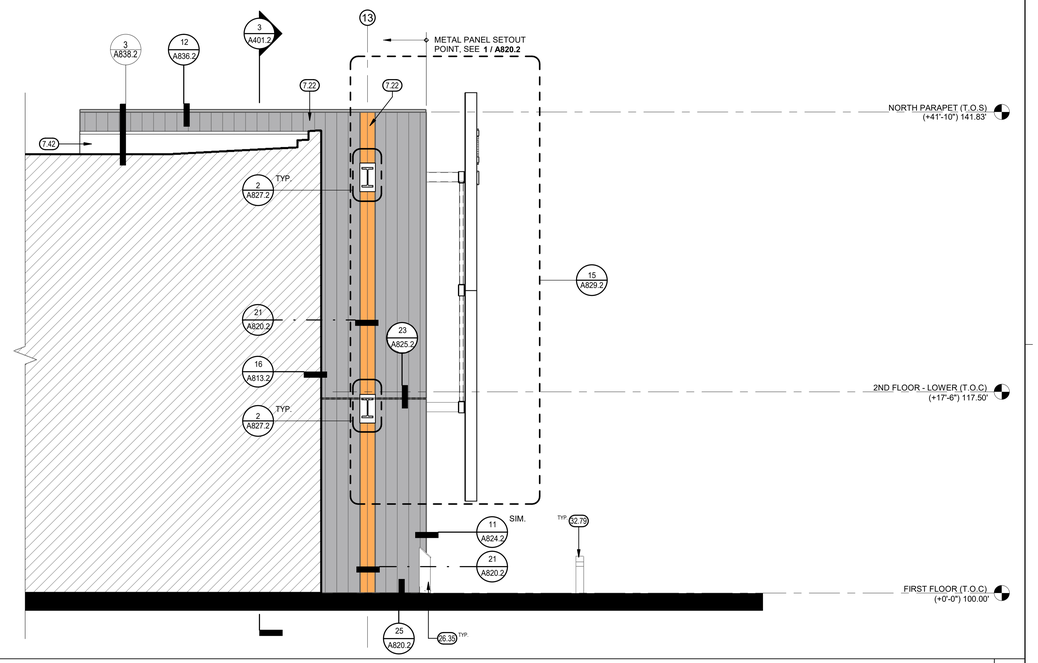

ENLARGED PARTIAL SOUTH ELEVATION — 3/16" = 1'-0" | 4

KEYNOTES 30.00

7.22	METAL WALL PANEL, VERTICAL SEE **1 / A820.2**
7.29	METAL WALL PANEL, HORIZONTAL
7.42	SINGLE-PLY ROOF WALL FLASHING
7.58	SHT. MTL. FLASHING AT +40'-3" +/- TO TOP
9.13	CEMENT PLASTER HORIZONTAL CONTROL JOINT, SEE **12 / A820.2**
9.14	CEMENT PLASTER VERTICAL CONTROL JOINT, SEE **13 / A820.2**
26.35	WAP BOLLARD, SEE ELECTRICAL
32.79	MANUFACTURED BOLLARD, SEE 6/132.2

PLOT DATE: 11/10/2025 8:55:07 AM

IDENTIFICATION STAMP
DIV. OF THE STATE ARCHITECT
APP: 02-122821 INC: 2
REVIEWED FOR
SS ☑ FLS ☑ ACS ☑
DATE: 11/20/2025

Teter, Inc. expressly reserves its common law copyright and other property rights in these plans. This document, the ideas and designs incorporated herein, as an instrument of professional service, is not to be used in whole or part, for any other project without prior written authorization.

MARK	DATE	DESCRIPTION
A.	11/13/2025	DSA BACKCHECK

LICENSED ARCHITECT ★ STANDARDIZED CONSTRUCTION SPECIALIST ★ STATE OF CALIFORNIA

TETER, INC.
FRESNO HEADQUARTERS
VISALIA | BAKERSFIELD | MODESTO | SAN LUIS OBISPO
ARCHITECTS ENGINEERS CONNECTED

TETER

VISALIA CAMPUS UNIVERSITY CENTER
COLLEGE OF THE SEQUOIAS - INCREMENT 2
915 S. MOONEY BLVD
VISALIA, CALIFORNIA

DRAWING TITLE
ENLARGED EXTERIOR ELEVATIONS

PROJECT NO.
22-12498

DRAWING
A306.2

\\tet-file1\Users\tara.chong_TETR\Documents\12498-A-UC_tara.chong.rvt

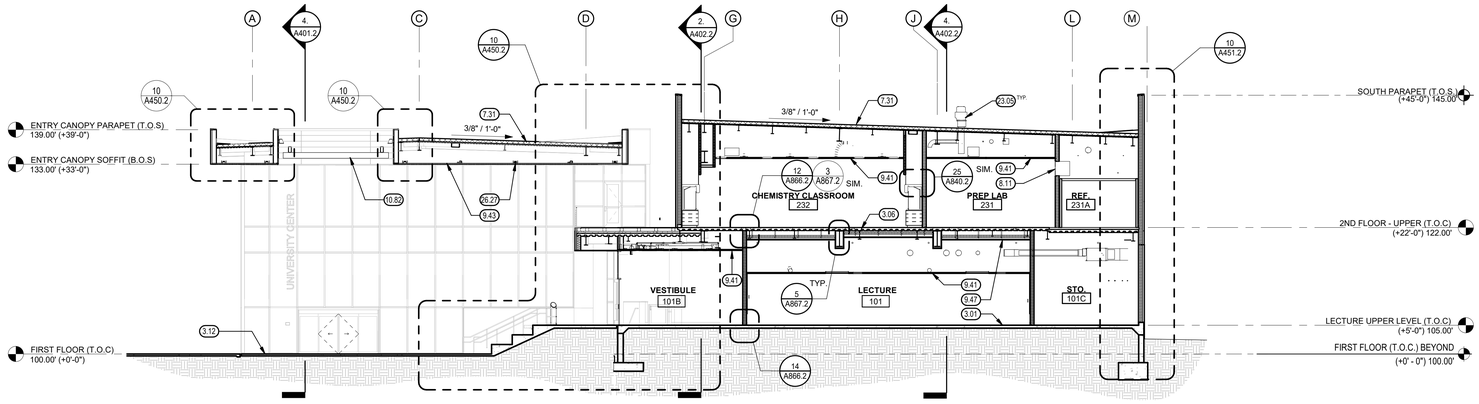

BUILDING SECTION 3/32" = 1'-0" 2

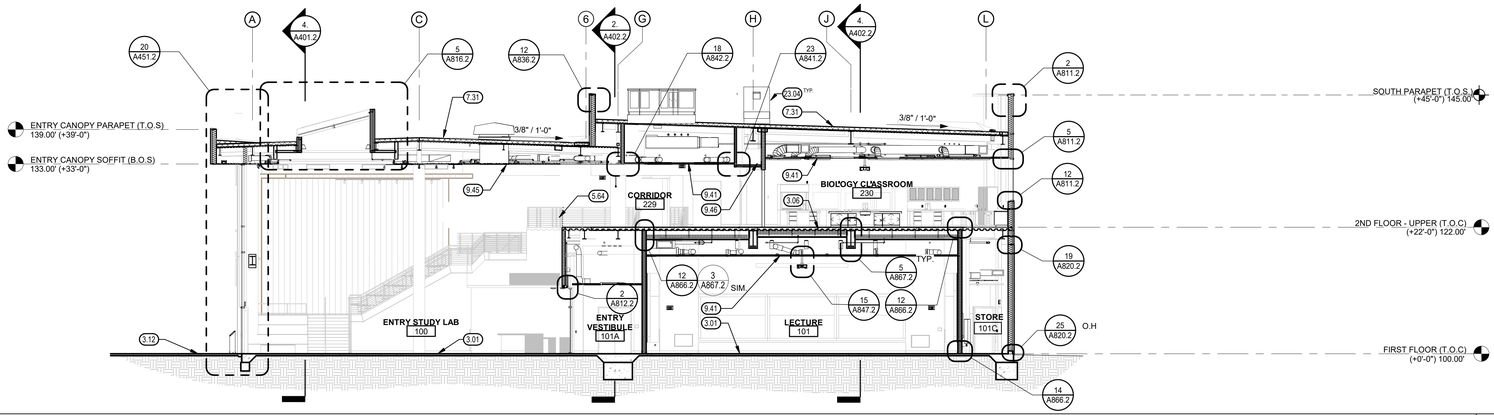

BUILDING SECTION 3/32" = 1'-0" 3

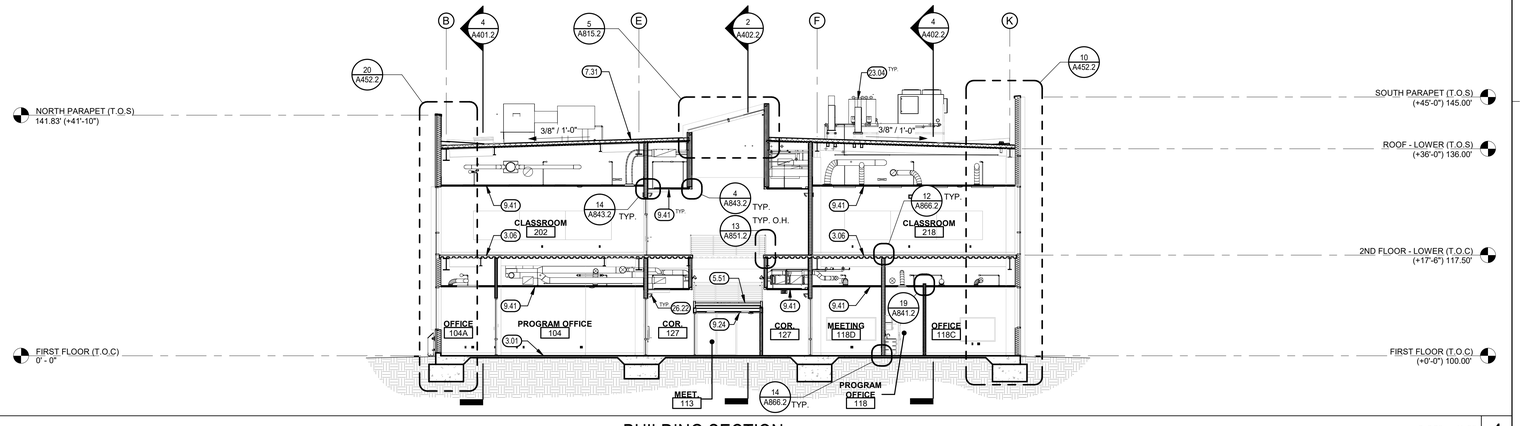

BUILDING SECTION 3/32" = 1'-0" 4

KEYNOTES (00.00)

3.01	CONCRETE SLAB, SEE STRUCTURAL
3.06	CONCRETE SLAB ON METAL DECK, SEE STRUCTURAL
3.12	CONCRETE WALK, SEE CIVIL
5.51	METAL PAN STAIRS WITH CONCRETE FILLED TREADS/LANDING
5.64	GUARDRAIL, TYP., SEE **24 / A850.2**
7.31	ROOF ASSEMBLY, TYP., SEE ROOF PLAN
8.11	20"W X 30"H WALL ACCESS DOOR AT MIN 3" ABOVE TOP OF COOLER BOX, SEE **3 / A840.2** (VERIFY LOCATION IN FIELD)
9.24	1-HR FIRE-RATED SHAFT WALL ASSEMBLY, UL U469 TO UNDERSIDE OF STAIR STRUCTURE AT ENCLOSED USABLE SPACE UNDER STAIRS
9.41	SUSPENDED ACOUSTIC PANEL CEILING
9.43	SUSPENDED METAL PANEL CEILING / SOFFIT
9.45	PERFORATED LINEAR METAL CEILING, SEE **2 / A842.2**
9.46	GYPSUM BOARD CEILING, SEE **23 / A841.2**
9.47	GYPSUM BOARD ACOUSTIC WRAP TO STRUCTURE, SEE **5 / A867.2**
10.82	HORIZONTAL BRISE SOLEIL, SEE STRUCTURAL & **12 / A827.2**
23.04	MECHANICAL EQUIPMENT, SEE MECHANICAL, TYP.
23.05	DUCT, SEE MECHANICAL
26.22	WALL MOUNTED LIGHT FIXTURE, SEE ELECTRICAL
26.27	RECESSED CEILING LIGHT, SEE ELECTRICAL

GENERAL NOTES

A. SEE STRUCTURAL FOR TOP OF STEEL ELEVATION (T.O.S.).

B. SEE STRUCTURAL FOR FOOTING INFORMATION

C. FOR PENETRATIONS OF FIRE RATED ASSEMBLIES SEE **2 / A870.2** , **5 / A870.2** **7 / A870.2** , **10 / A870.2** , **12 / A870.2** , **13 / A871.2**

PLOT DATE: 11/10/2025 8:55:30 AM

IDENTIFICATION STAMP
DIV. OF THE STATE ARCHITECT
APP: 02-122821 INC: 2
REVIEWED FOR
SS ☑ FLS ☑ ACS ☑
DATE: 11/20/2025

Teter, Inc. expressly reserves its common law copyright and other property rights in these plans. This document, the ideas and designs incorporated herein, as an instrument of professional service, is not to be used in whole or in part, for any other project without prior written authorization.

MARK	DATE	DESCRIPTION
A.	11/13/2025	DSA BACKCHECK

LICENSED ARCHITECT ★ REGISTERED PROFESSIONAL ENGINEER ★ STATE OF CALIFORNIA

TETER, INC.
FRESNO HEADQUARTERS
VISALIA | BAKERSFIELD | MODESTO | SAN LUIS OBISPO
ARCHITECTS ENGINEERS CONNECTED

VISALIA CAMPUS UNIVERSITY CENTER
COLLEGE OF THE SEQUOIAS - INCREMENT 2
915 S. MOONEY BLVD
VISALIA, CALIFORNIA

DRAWING TITLE
BUILDING SECTIONS

PROJECT NO.
22-12498

DRAWING
A400.2

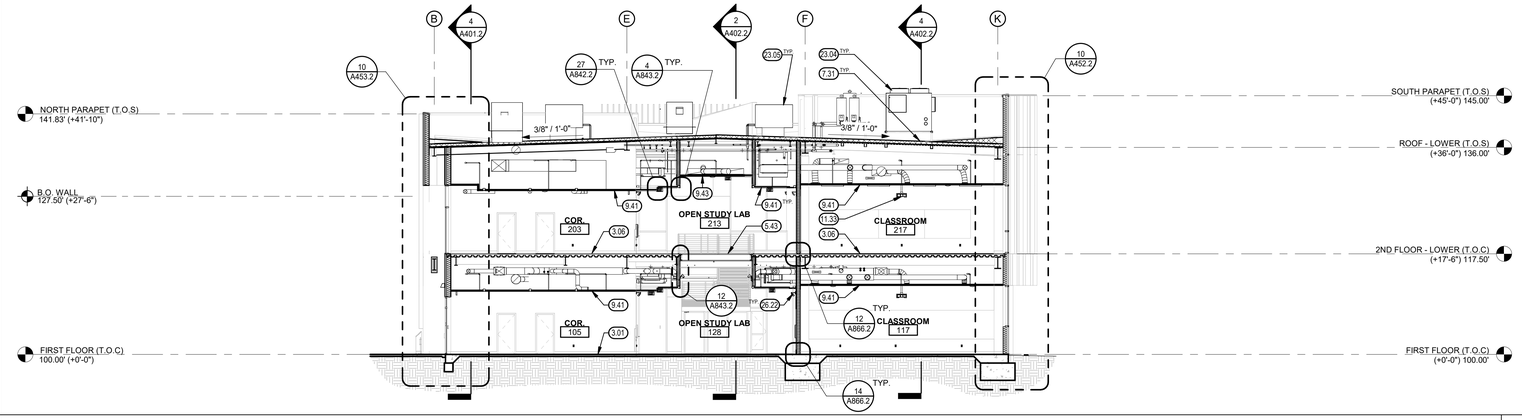

BUILDING SECTION 3/32" = 1'-0" 2

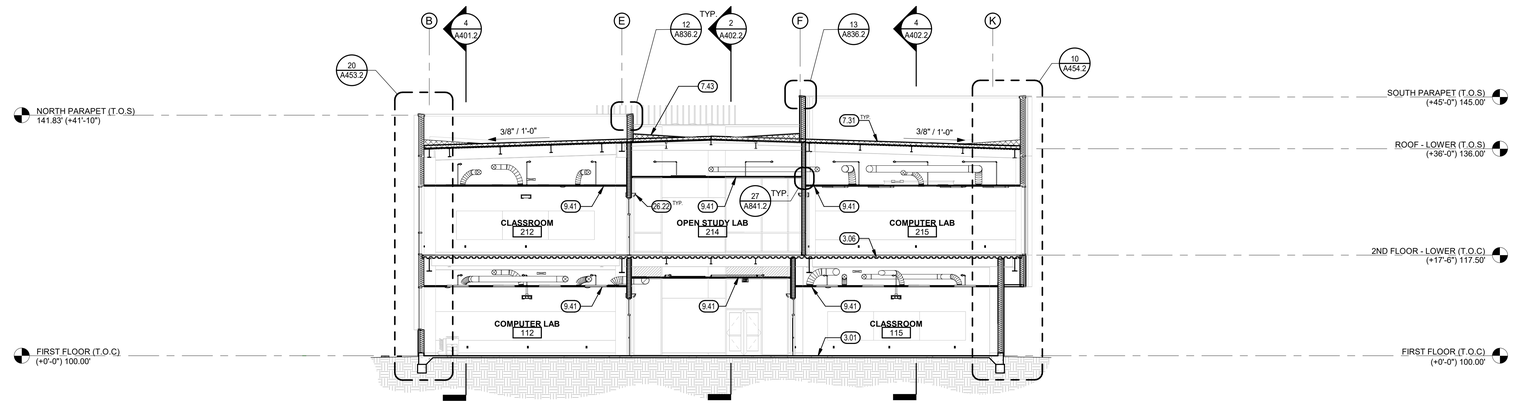

BUILDING SECTION 3/32" = 1'-0" 3

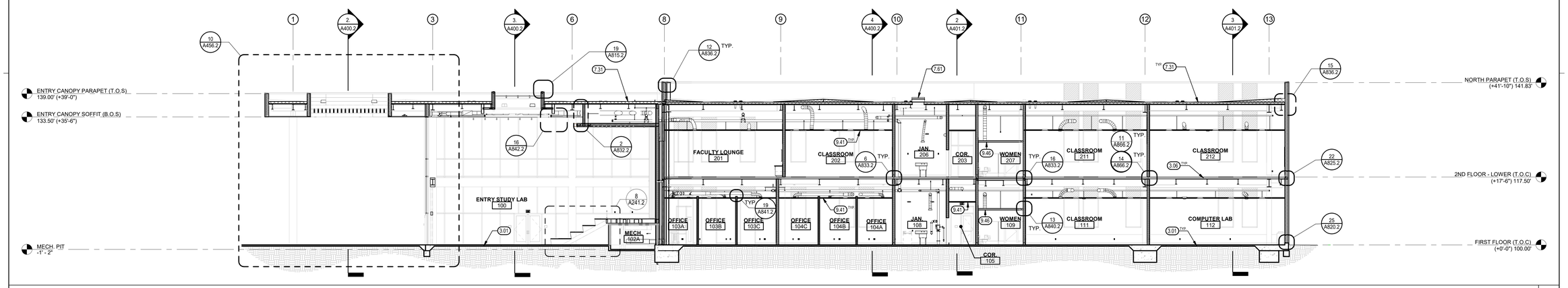

SECTION 3/32" = 1'-0" 4

KEYNOTES

3.01	CONCRETE SLAB, SEE STRUCTURAL
3.06	CONCRETE SLAB ON METAL DECK, SEE STRUCTURAL
5.43	METAL BAR GRATING
7.31	ROOF ASSEMBLY, TYP., SEE ROOF PLAN
7.43	ROOF CRICKET, SEE ROOF PLAN
7.61	ROOF ACCESS HATCH, SEE **22 / A835.2**
9.41	SUSPENDED ACOUSTIC PANEL CEILING
9.43	SUSPENDED METAL PANEL CEILING / SOFFIT
9.46	GYPSUM BOARD CEILING, SEE **23 / A841.2**
11.33	PROJECTOR MOUNT, CEILING SUPPORTED, SEE **15 / A847.2**
23.04	MECHANICAL EQUIPMENT, SEE MECHANICAL, TYP.
23.05	DUCT, SEE MECHANICAL
26.22	WALL MOUNTED LIGHT FIXTURE, SEE ELECTRICAL

GENERAL NOTES

A. SEE STRUCTURAL FOR TOP OF STEEL ELEVATION (T.O.S.).

B. SEE STRUCTURAL FOR FOOTING INFORMATION

C. FOR PENETRATIONS OF FIRE RATED ASSEMBLIES SEE **2 / A870.2** , **5 / A870.2** **7 / A870.2** , **10 / A870.2** , **12 / A870.2** , **13 / A871.2**

IDENTIFICATION STAMP
DIV. OF THE STATE ARCHITECT
APP: 02-122821 INC: 2
REVIEWED FOR
SS ☑ FLS ☑ ACS ☑
DATE: 11/20/2025

Teter, Inc. expressly reserves its common law copyright and other property rights in these plans. This document, the ideas and designs incorporated herein, as an instrument of professional service, is not to be used in whole or in part, for any other project without prior written authorization.

MARK	DATE	DESCRIPTION
A	11/13/2025	DSA BACKCHECK

LICENSED ARCHITECT JONATHAN COULTER STATE OF CALIFORNIA

TETER, INC.
FRESNO HEADQUARTERS
VISALIA | BAKERSFIELD | MODESTO | SAN LUIS OBISPO
ARCHITECTS ENGINEERS CONNECTED

VISALIA CAMPUS UNIVERSITY CENTER
COLLEGE OF THE SEQUOIAS - INCREMENT 2
915 S. MOONEY BLVD
VISALIA, CALIFORNIA

DRAWING TITLE
BUILDING SECTIONS

PROJECT NO.
22-12498

DRAWING
A401.2

\\tetr-file1\Users\tara.chong_TETR\Documents\12498-A-UC_tara.chong.rvt

PLOT DATE: 11/10/2025 8:55:50 AM

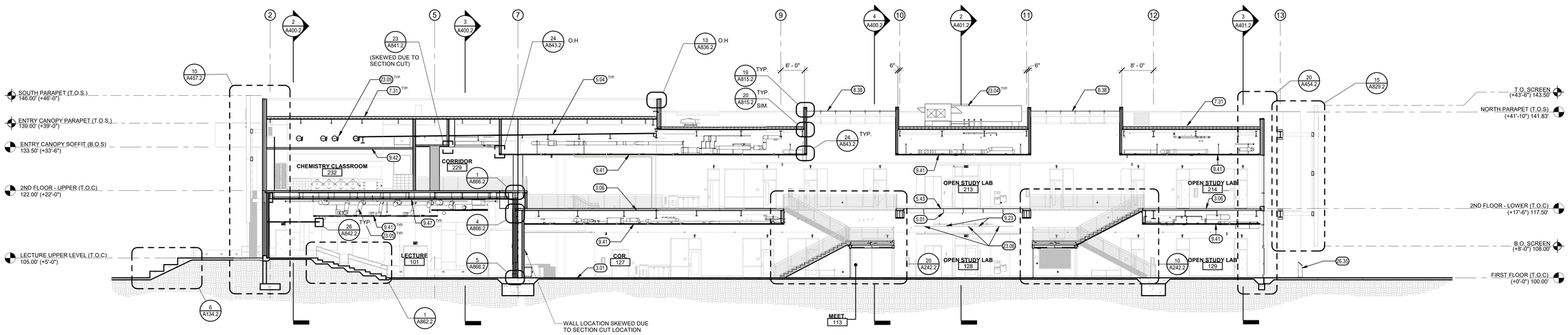

SECTION

3/32" = 1'-0" | 2

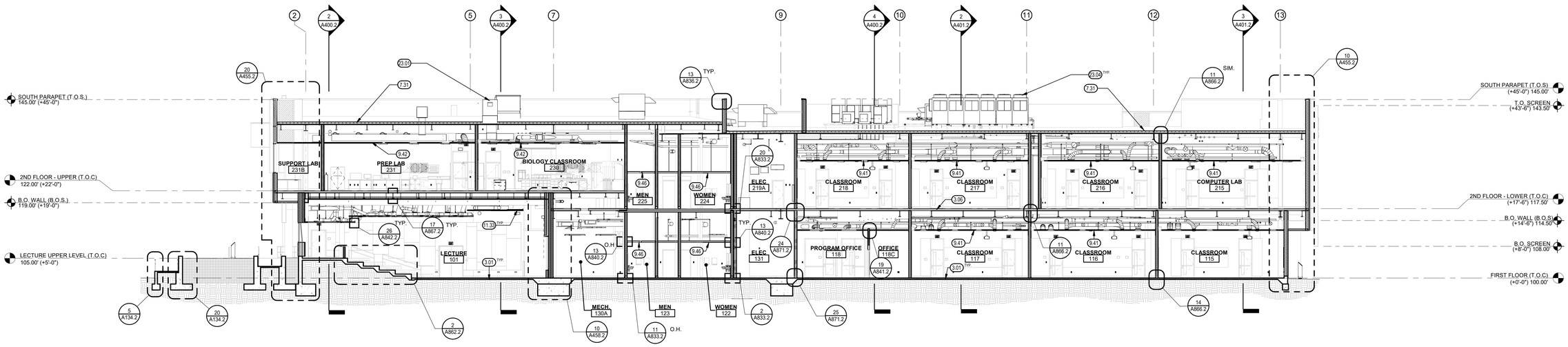

SECTION

3/32" = 1'-0" | 4

KEYNOTES (30.00)

3.01 CONCRETE SLAB, SEE STRUCTURAL
3.06 CONCRETE SLAB ON METAL DECK, SEE STRUCTURAL
5.01 STRUCTURAL STEEL FRAMING, SEE STRUCTURAL
5.04 METAL DECK, SEE STRUCTURAL
5.43 METAL BAR GRATING
7.31 ROOF ASSEMBLY, TYP., SEE ROOF PLAN
8.38 SLOPED GLAZING, SEE **4 / A815.2 & 5 / A815.2** FOR STAIR LOCATION AND **3 / A816.2 & 5 / A816.2** FOR LOBBY LOCATION
9.23 GYPSUM BOARD REVEAL, SEE **29 / A842.2**
9.41 SUSPENDED ACOUSTIC PANEL CEILING
9.42 SUSPENDED ACOUSTIC PANEL CEILING, WASHABLE
9.46 GYPSUM BOARD CEILING, SEE **23 / A841.2**
9.47 GYPSUM BOARD ACOUSTIC WRAP TO STRUCTURE, SEE **17 / A867.2**
11.33 PROJECTOR MOUNT, CEILING SUPPORTED, SEE **15 / A847.2**
23.01 HVAC EQUIPMENT, SEE MECHANICAL
23.04 MECHANICAL EQUIPMENT, SEE MECHANICAL, TYP.
23.05 DUCT, SEE MECHANICAL
23.06 WALL REGISTER, SEE MECHANICAL
26.35 WAP BOLLARD, SEE ELECTRICAL

GENERAL NOTES

A. SEE STRUCTURAL FOR TOP OF STEEL ELEVATION (T.O.S.).

B. SEE STRUCTURAL FOR FOOTING INFORMATION

C. FOR PENETRATIONS OF FIRE RATED ASSEMBLIES SEE **2 / A870.2** , **5 / A870.2** **7 / A870.2** , **10 / A870.2** , **12 / A870.2** , **13 / A871.2**

IDENTIFICATION STAMP
DIV. OF THE STATE ARCHITECT
APP: 02-122821 INC: 2
REVIEWED FOR
SS ☑ FLS ☑ ACS ☑
DATE: 11/20/2025

Teter, Inc. expressly reserves its common law copyright and other property rights in these plans. This document, the ideas and designs incorporated herein, as an instrument of professional service, is not to be used in whole or in part, for any other project without prior written authorization.

MARK	DATE	DESCRIPTION
A.	11/13/2025	DSA BACKCHECK

LICENSED ARCHITECT CONSTRUCTION CONFORMED COPY STATE OF CALIFORNIA

TETER, INC.
FRESNO HEADQUARTERS
VISALIA | BAKERSFIELD | MODESTO | SAN LUIS OBISPO
ARCHITECTS ENGINEERS CONNECTED
TETER

VISALIA CAMPUS UNIVERSITY CENTER
COLLEGE OF THE SEQUOIAS - INCREMENT 2
915 S. MOONEY BLVD
VISALIA, CALIFORNIA

DRAWING TITLE
BUILDING SECTIONS

PROJECT NO.
22-12498

DRAWING
A402.2

\\tet-file1\Users\tara.chong_TETR\Documents\12498-A-UC_tara.chong.rvt
PLOT DATE: 11/10/2025 8:56:23 AM

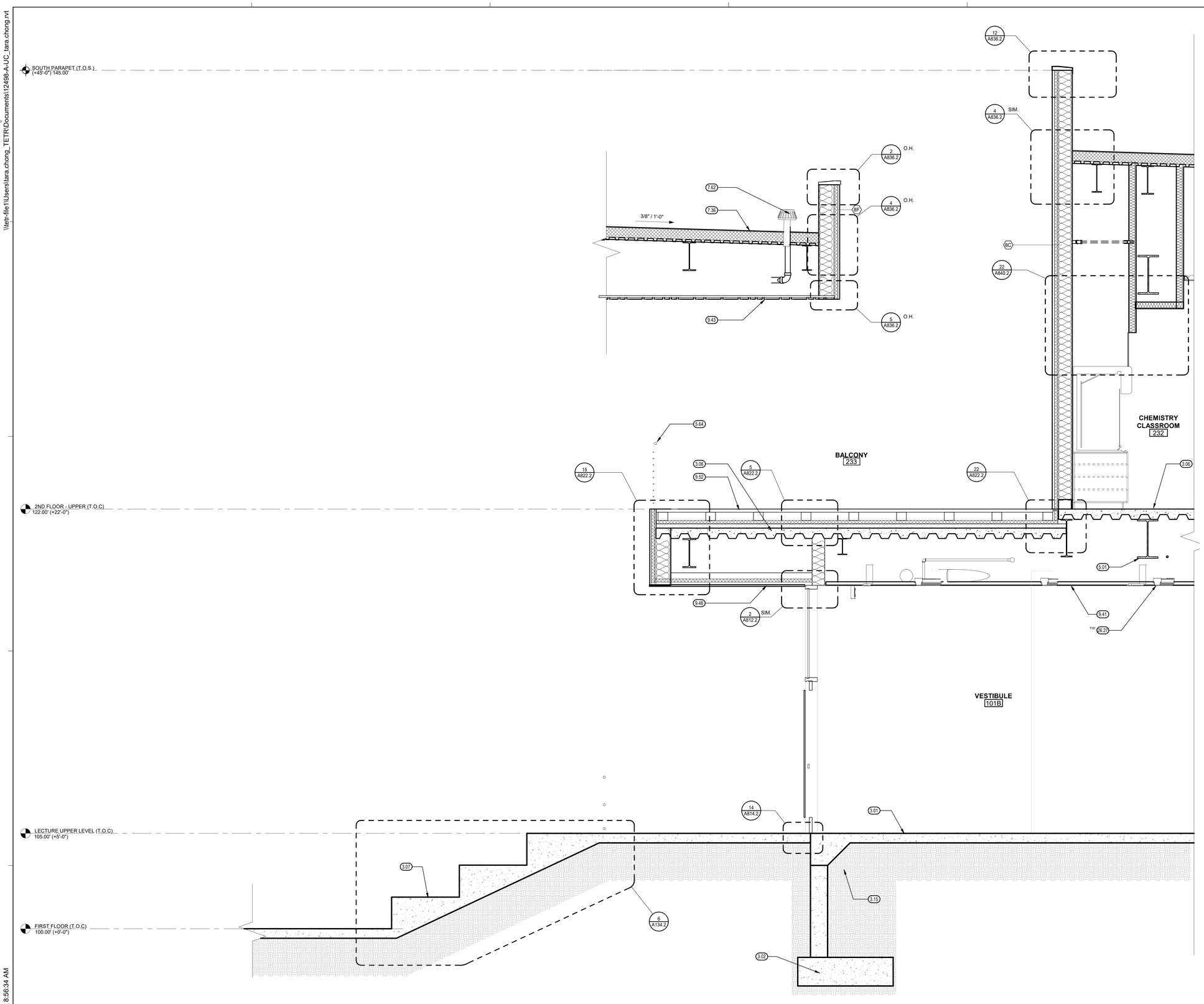

WALL SECTION

1/2" = 1'-0"

10

KEYNOTES (00.00)

3.01	CONCRETE SLAB, SEE STRUCTURAL
3.02	CONCRETE FOOTING, SEE STRUCTURAL
3.06	CONCRETE SLAB ON METAL DECK, SEE STRUCTURAL
3.07	CONCRETE STAIRS, SEE **6 / A134.2**
3.15	SEE STRUCTURAL FOR UNDERSLAB REQUIREMENTS
5.01	STRUCTURAL STEEL FRAMING, SEE STRUCTURAL
5.64	GUARDRAIL, TYP. SEE **18 / A823.2**
7.36	SINGLE PLY ROOFING SYSTEM
7.62	ROOF DRAIN AND OVERFLOW, SEE PLUMBING AND **1 / A835.2**
9.41	SUSPENDED ACOUSTIC PANEL CEILING
9.43	SUSPENDED METAL PANEL CEILING / SOFFIT
9.48	METAL PANEL SOFFIT PANEL
9.52	PRESSED PAVER
26.27	RECESSED CEILING LIGHT, SEE ELECTRICAL

IDENTIFICATION STAMP
DIV. OF THE STATE ARCHITECT
APP: 02-122821 INC: 2
REVIEWED FOR
SS ☑ FLS ☑ ACS ☑
DATE: 11/20/2025

Teter, Inc. expressly reserves its common law copyright and other property rights in these plans. This document, the ideas and designs incorporated herein, as an instrument of professional service, is not to be used in whole or in part, for any other project without prior written authorization.

MARK	DATE	DESCRIPTION
A.	11/13/2025	DSA BACKCHECK

TETER, INC.
FRESNO HEADQUARTERS
VISALIA | BAKERSFIELD | MODESTO | SAN LUIS OBISPO
ARCHITECTS ENGINEERS CONNECTED

VISALIA CAMPUS UNIVERSITY CENTER
COLLEGE OF THE SEQUOIAS - INCREMENT 2
915 S. MOONEY BLVD
VISALIA, CALIFORNIA

DRAWING TITLE
WALL SECTION

PROJECT NO.
22-12498

DRAWING
A450.2

\\tet-file1\Users\tara.chong_TETR\Documents\12498-A-UC_tara.chong.rvt
PLOT DATE: 11/10/2025 8:56:34 AM

\\tet-file1\Users\tara.chong_TETR\Documents\12498-A-UC_tara.chong.rvt

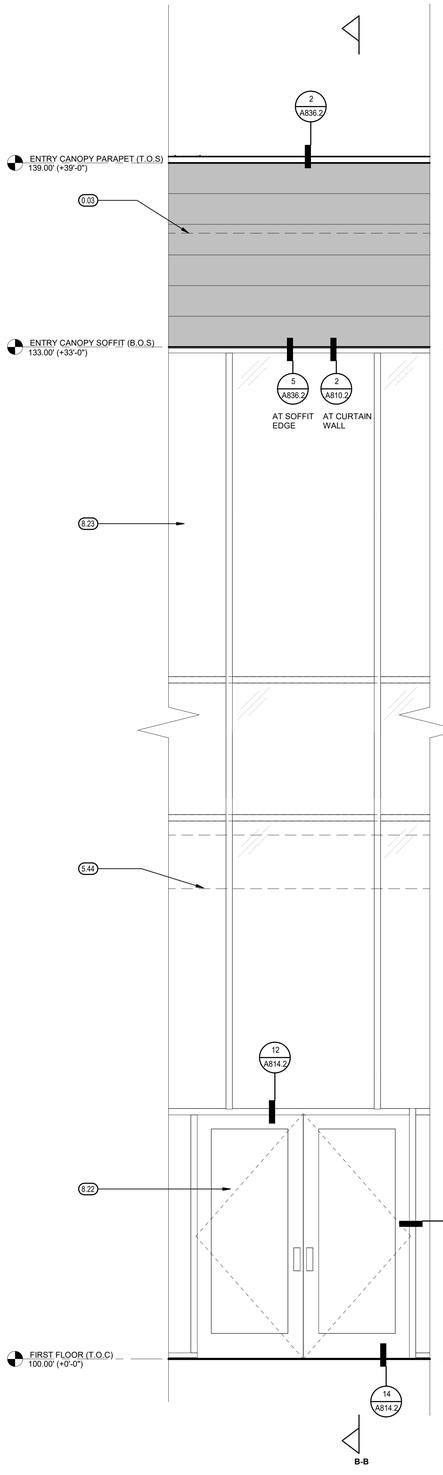

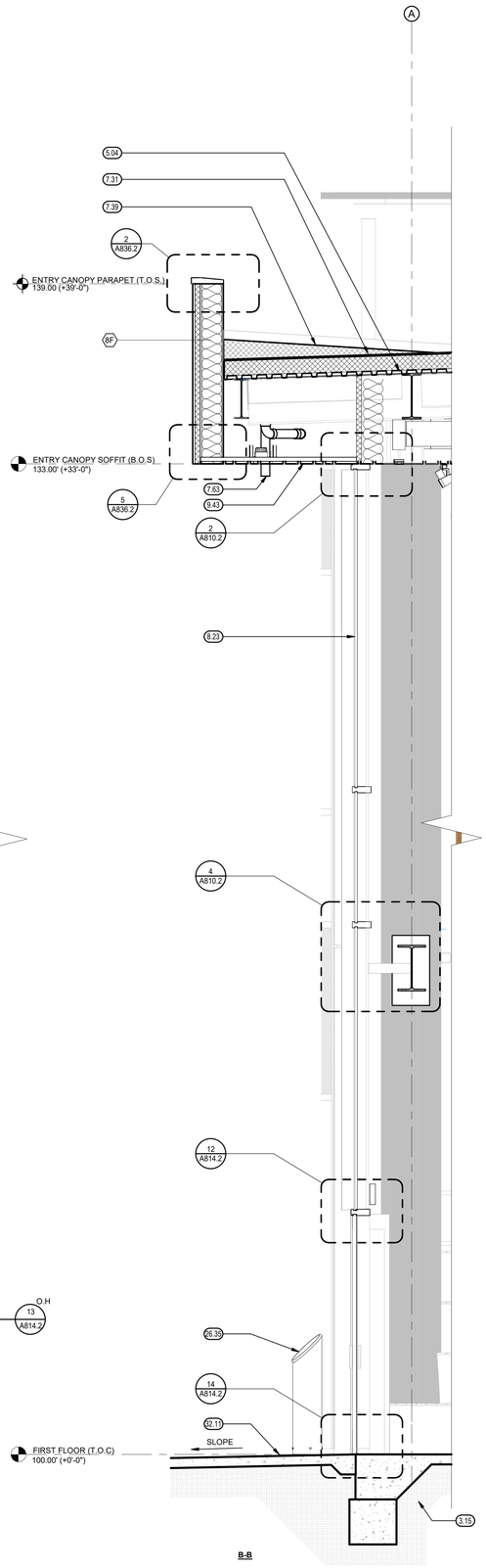

WALL SECTION AND PARTIAL WALL ELEVATION 1/2" = 1'-0" 20

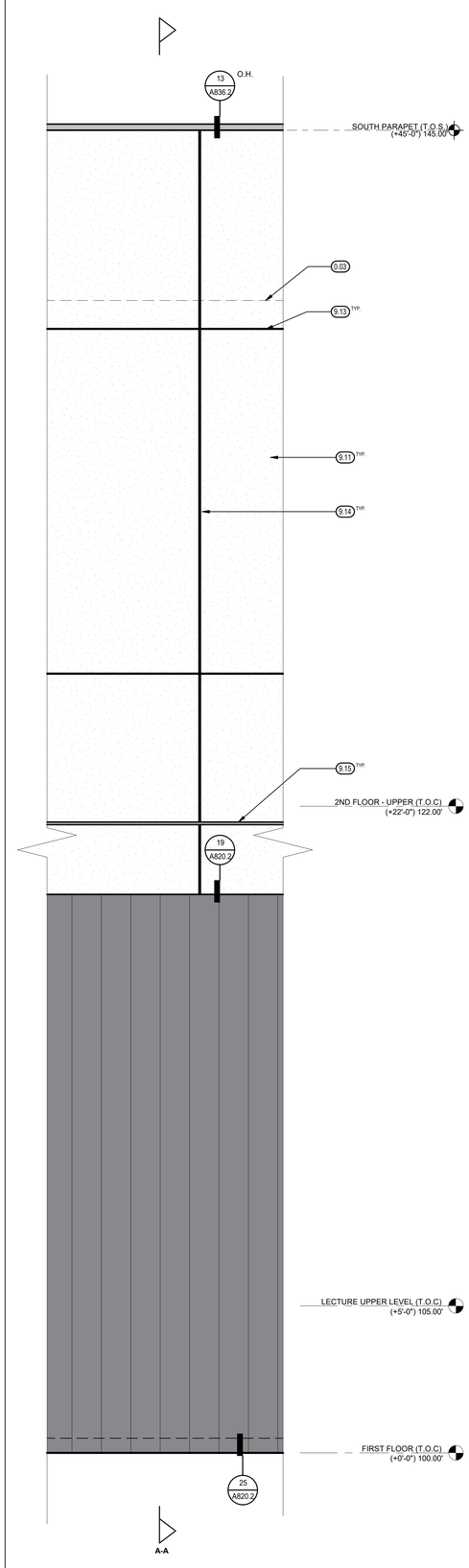

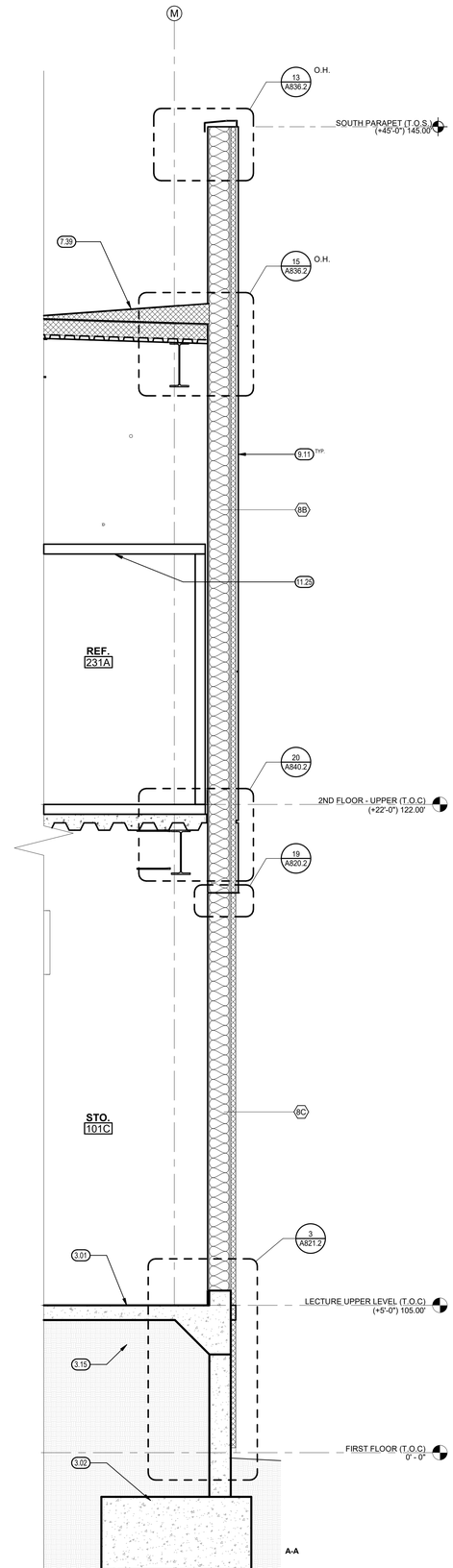

WALL SECTION AND PARTIAL WALL ELEVATION 1/2" = 1'-0" 10

KEYNOTES 00.00

0.03	ROOF OUTLINE, TYP. - SEE ROOF PLAN
3.01	CONCRETE SLAB, SEE STRUCTURAL
3.02	CONCRETE FOOTING, SEE STRUCTURAL
3.15	SEE STRUCTURAL FOR UNDERSLAB REQUIREMENTS
5.04	METAL DECK, SEE STRUCTURAL
5.44	BEAM ENCLOSURE, SEE **18 / A826.2**
7.31	ROOF ASSEMBLY, TYP., SEE ROOF PLAN
7.39	TAPERED INSULATION CRICKET, TYP.
7.63	OVERFLOW AT SOFFIT, SEE **2 / A843.2**
8.22	ALUMINUM ENTRANCE DOOR(S)
8.23	ALUMINUM CURTAIN WALL, SEE WINDOW SCHEDULE
9.11	CEMENT PLASTER SYSTEM, TYP.
9.13	CEMENT PLASTER HORIZONTAL CONTROL JOINT, SEE **12 / A820.2**
9.14	CEMENT PLASTER VERTICAL CONTROL JOINT, SEE **13 / A820.2**
9.15	CEMENT PLASTER EXPANSION GAP, SEE **22 / A825.2**
9.43	SUSPENDED METAL PANEL CEILING / SOFFIT
11.25	WALK-IN REFRIGERATOR PANELS, BY OTHERS
26.35	WAP BOLLARD, SEE ELECTRICAL
32.11	CONCRETE PAVING/WALK, SEE CIVIL

IDENTIFICATION STAMP
DIV. OF THE STATE ARCHITECT
APP: 02-122821 INC: 2
REVIEWED FOR
SS ☑ FLS ☑ ACS ☑
DATE: 11/20/2025

Teter, Inc. expressly reserves its common law copyright and other property rights in these plans. This document, the ideas and designs incorporated herein, as an instrument of professional service, is not to be used in whole or in part, for any other project without prior written authorization.

MARK	DATE	DESCRIPTION
A	11/13/2025	DSA BACKCHECK

LICENSED ARCHITECT ★ STATE OF CALIFORNIA ★ CHRISTOPHER J. CAMPBELL ★ No. C-32422 ★ RENEWAL 08/31/2027

TETER, INC.
FRESNO HEADQUARTERS
VISALIA | BAKERSFIELD | MODESTO | SAN LUIS OBISPO
ARCHITECTS ENGINEERS CONNECTED
TETER

VISALIA CAMPUS UNIVERSITY CENTER
COLLEGE OF THE SEQUOIAS - INCREMENT 2
915 S. MOONEY BLVD
VISALIA, CALIFORNIA

DRAWING TITLE
WALL SECTIONS AND PARTIAL WALL ELEVATIONS

PROJECT NO.
22-12498

DRAWING
A451.2

PLOT DATE: 11/10/2025 8:56:50 AM

\\tet-file1\Users\tara.chong_TETR\Documents\12498-A-UC_tara.chong.rvt

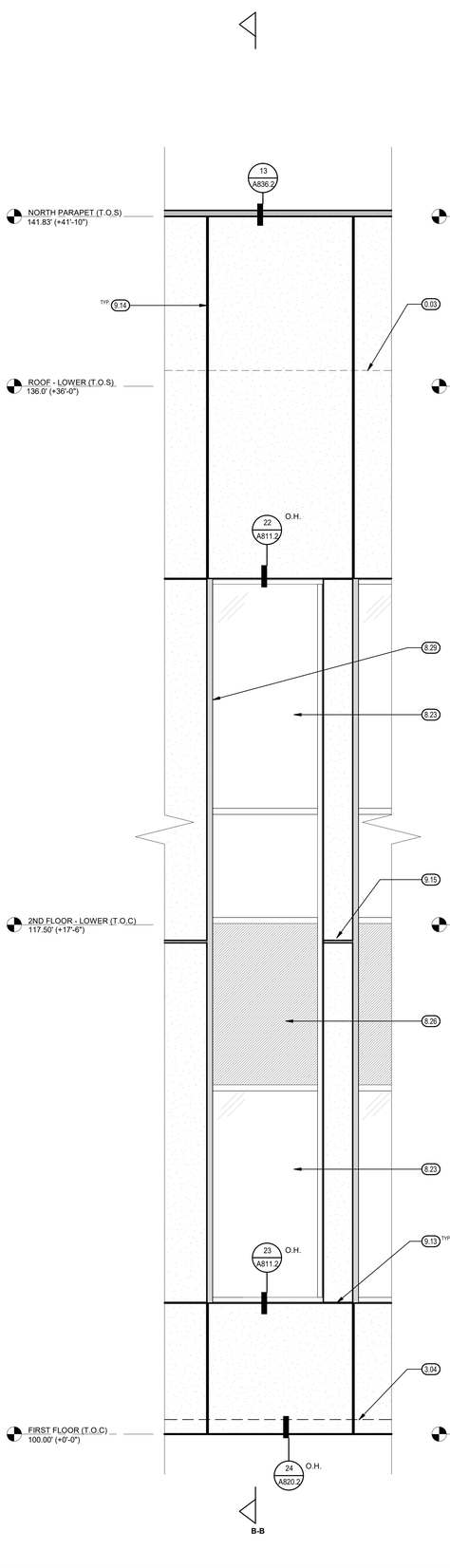

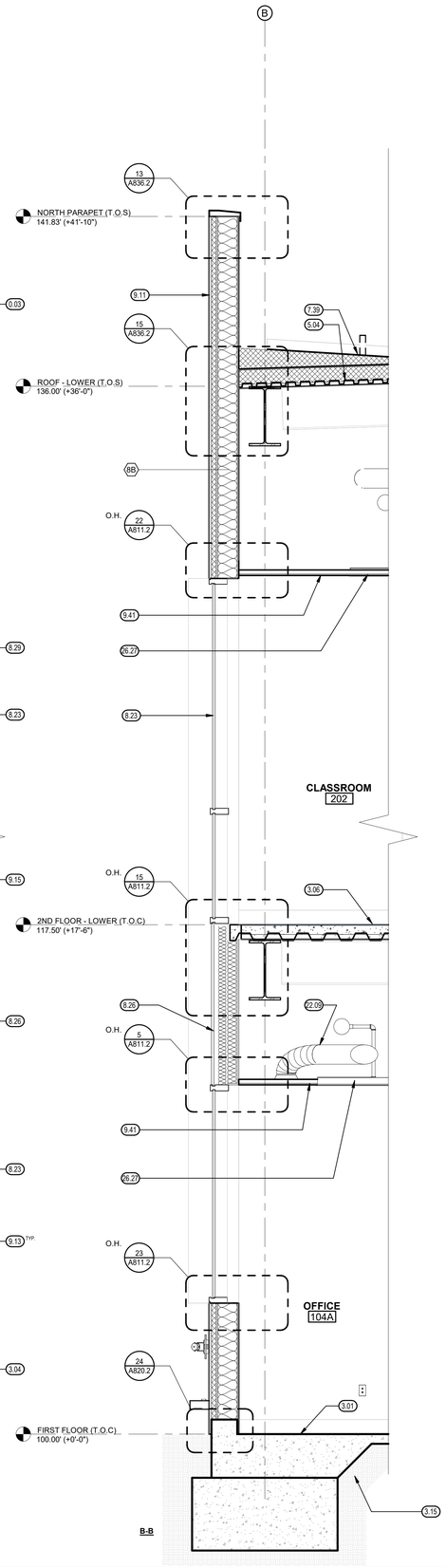

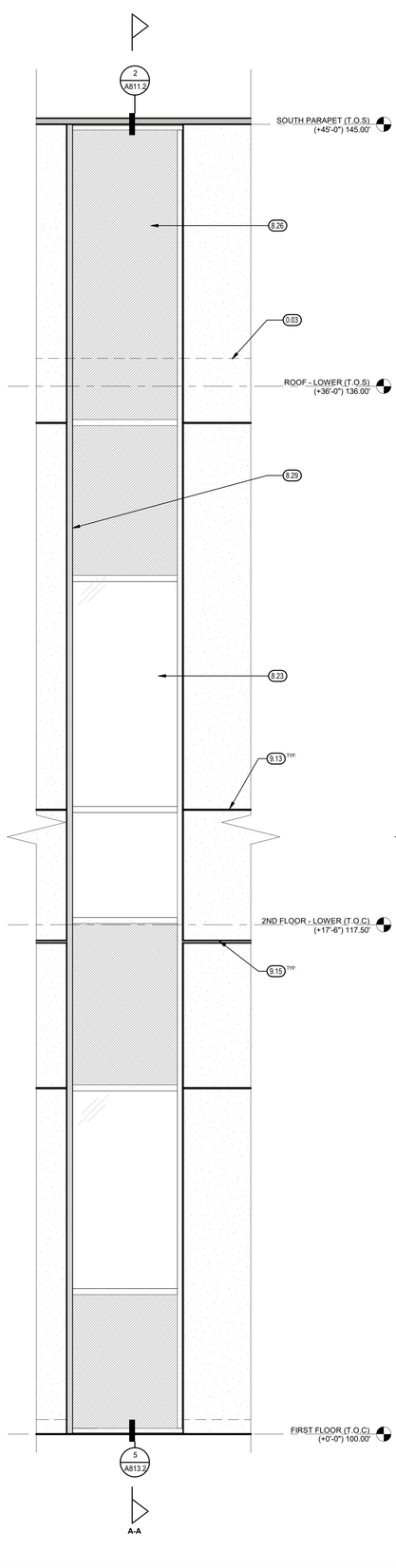

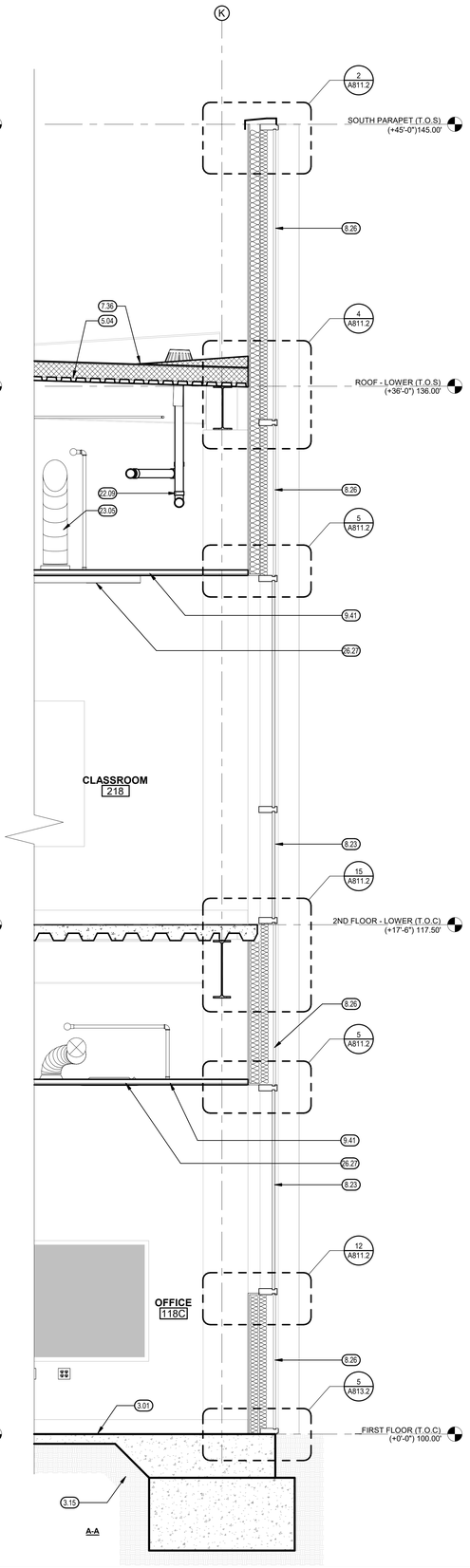

KEYNOTES (0.00)

0.03	ROOF OUTLINE, TYP. - SEE ROOF PLAN
3.01	CONCRETE SLAB, SEE STRUCTURAL
3.04	CONCRETE CURB AT WALL
3.06	CONCRETE SLAB ON METAL DECK, SEE STRUCTURAL
3.15	SEE STRUCTURAL FOR UNDERSLAB REQUIREMENTS
5.04	METAL DECK, SEE STRUCTURAL
7.36	SINGLE PLY ROOFING SYSTEM
7.39	TAPERED INSULATION CRICKET, TYP.
8.23	ALUMINUM CURTAIN WALL, SEE WINDOW SCHEDULE
8.26	SPANDREL GLAZING AS SCHEDULED
8.29	CURTAIN WALL MULLION END CAP ATTACHMENT
9.11	CEMENT PLASTER SYSTEM, TYP.
9.13	CEMENT PLASTER HORIZONTAL CONTROL JOINT, SEE **12 / A820.2**
9.14	CEMENT PLASTER VERTICAL CONTROL JOINT, SEE **13 / A820.2**
9.15	CEMENT PLASTER EXPANSION GAP, SEE **23 / A825.2**
9.41	SUSPENDED ACOUSTIC PANEL CEILING
22.09	ROOF DRAIN AND OVERFLOW PIPING, SEE PLUMBING
23.05	DUCT, SEE MECHANICAL
26.27	RECESSED CEILING LIGHT, SEE ELECTRICAL

WALL SECTION AND PARTIAL WALL ELEVATION 1/2" = 1'-0" 20

WALL SECTION AND PARTIAL WALL ELEVATION 1/2" = 1'-0" 10

PLOT DATE: 11/10/2025 8:57:05 AM

IDENTIFICATION STAMP
DIV. OF THE STATE ARCHITECT
APP: 02-122821 INC: 2
REVIEWED FOR
SS ☑ FLS ☑ ACS ☑
DATE: 11/20/2025

Teter, Inc. expressly reserves its common law copyright and other property rights in these plans. This document, the ideas and designs incorporated herein, as an instrument of professional service, is not to be used in whole or in part, for any other project without prior written authorization.

MARK	DATE	DESCRIPTION
A.	11/13/2025	DSA BACKCHECK

LICENSED ARCHITECT STATE OF CALIFORNIA

TETER, INC.
FRESNO HEADQUARTERS
VISALIA | BAKERSFIELD | MODESTO | SAN LUIS OBISPO
ARCHITECTS ENGINEERS CONNECTED
TETER

VISALIA CAMPUS UNIVERSITY CENTER
COLLEGE OF THE SEQUOIAS - INCREMENT 2
915 S. MOONEY BLVD
VISALIA, CALIFORNIA

DRAWING TITLE
WALL SECTIONS AND PARTIAL WALL ELEVATIONS

PROJECT NO.
22-12498

DRAWING
A452.2

\\tet-file1\Users\tara.chong_TETR\Documents\12498-A-UC_tara.chong.rvt

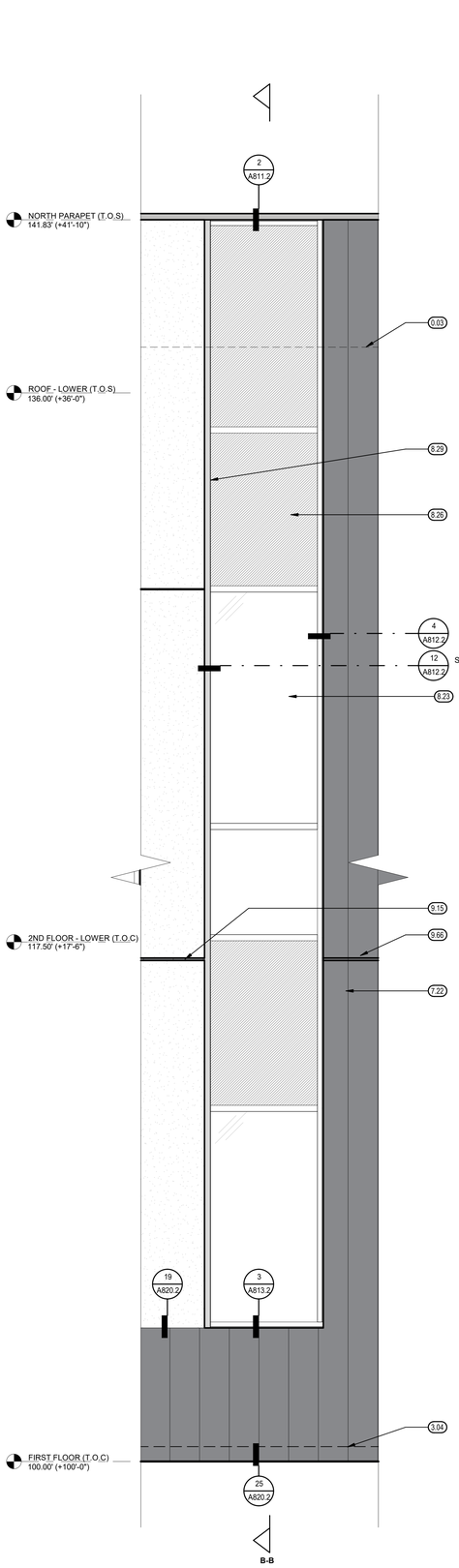

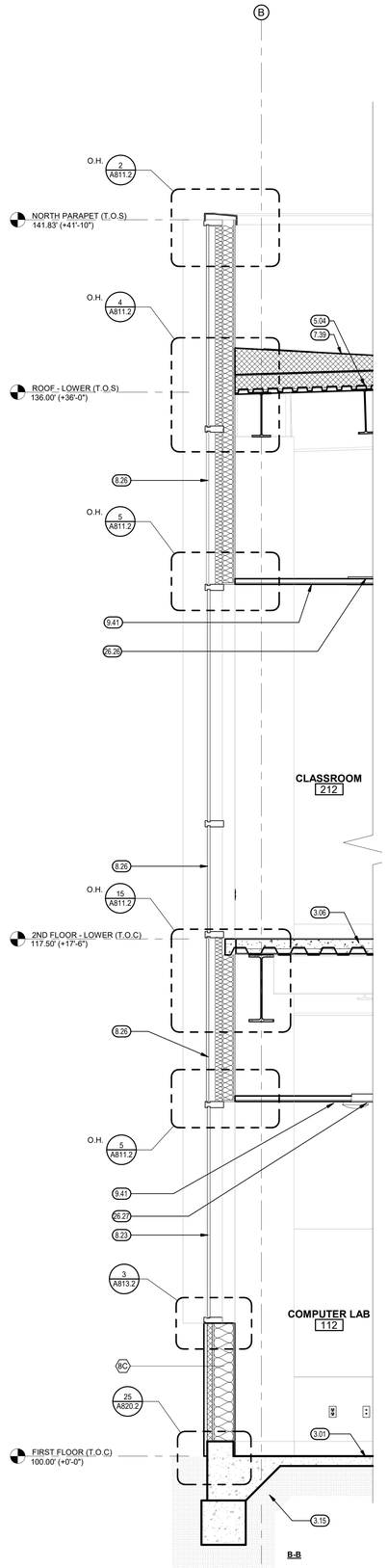

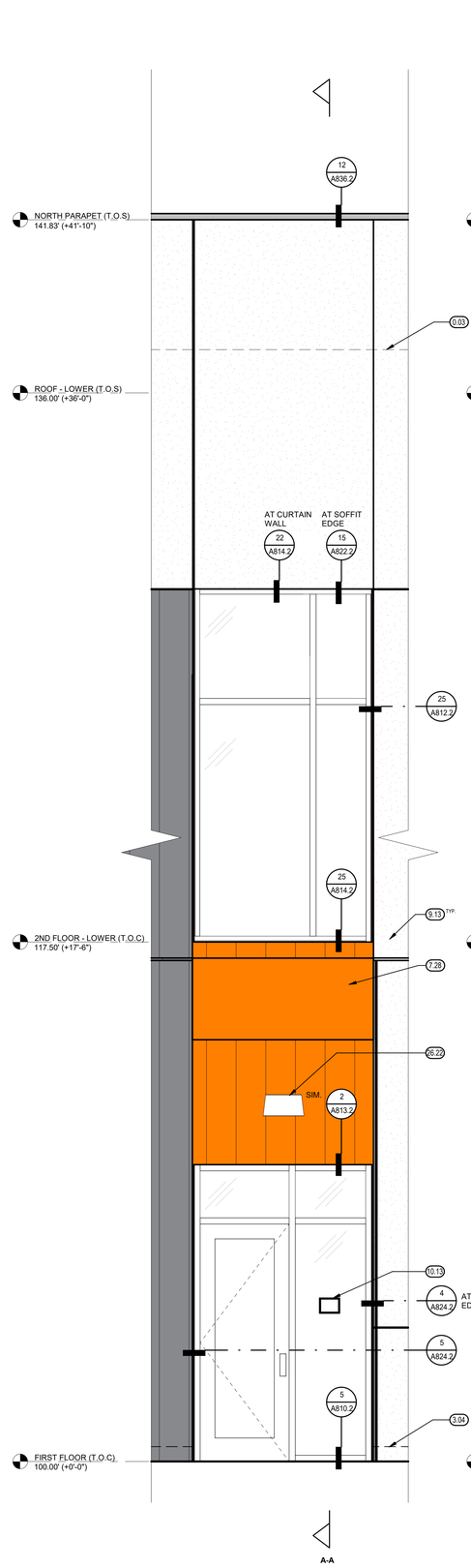

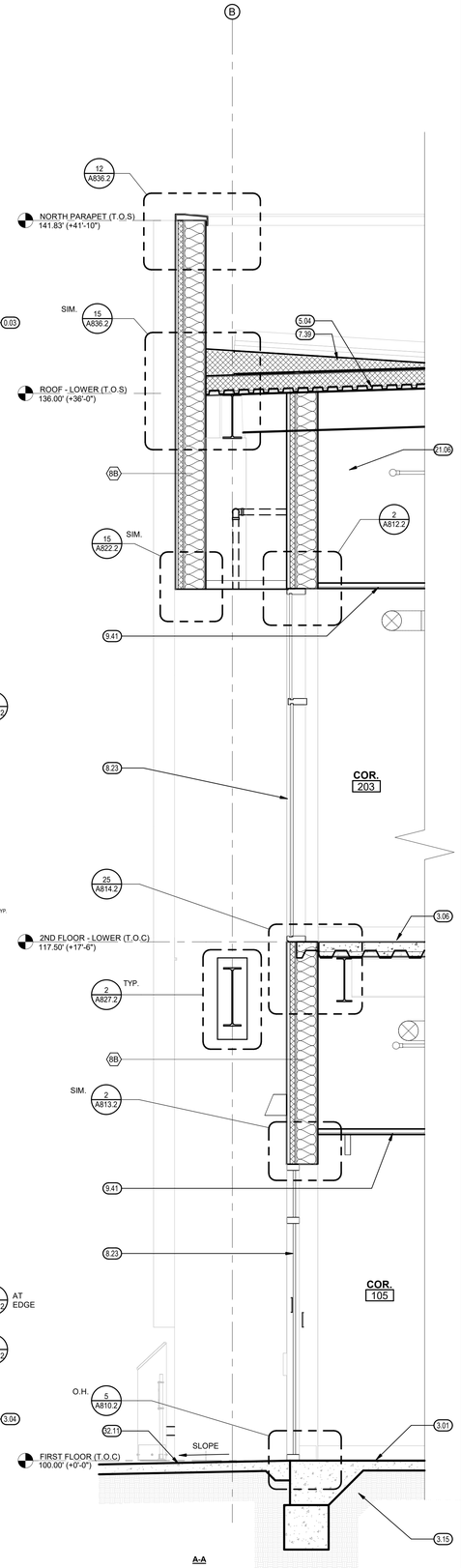

KEYNOTES (0.00)

0.03	ROOF OUTLINE, TYP. - SEE ROOF PLAN
3.01	CONCRETE SLAB, SEE STRUCTURAL
3.04	CONCRETE CURB AT WALL
3.06	CONCRETE SLAB ON METAL DECK, SEE STRUCTURAL
3.15	SEE STRUCTURAL FOR UNDERSLAB REQUIREMENTS
5.04	METAL DECK, SEE STRUCTURAL
7.22	METAL WALL PANEL, VERTICAL SEE **1 / A820.2**
7.28	BEAM ENCLOSURE, SEE **2 / A827.2**
7.39	TAPERED INSULATION CRICKET, TYP.
8.23	ALUMINUM CURTAIN WALL, SEE WINDOW SCHEDULE
8.26	SPANDREL GLAZING AS SCHEDULED
8.29	CURTAIN WALL MULLION END CAP ATTACHMENT
9.13	CEMENT PLASTER HORIZONTAL CONTROL JOINT, SEE **12 / A820.2**
9.15	CEMENT PLASTER EXPANSION GAP, SEE **22 / A825.2**
9.41	SUSPENDED ACOUSTIC PANEL CEILING
9.66	METAL PANEL EXPANSION JOINT, SEE **23 / A825.2**
10.13	WALL SIGNAGE PER PLAN, TYP SEE **3 / A801.2**
21.06	FIRE MAIN LINE, SEE FIRE PROTECTION
26.22	WALL MOUNTED LIGHT FIXTURE, SEE ELECTRICAL
26.26	RECESSED LIGHT FIXTURE, SEE ELECTRICAL
26.27	RECESSED CEILING LIGHT, SEE ELECTRICAL
32.11	CONCRETE PAVING/WALK, SEE CIVIL

WALL SECTION AND PARTIAL WALL ELEVATION 1/2" = 1'-0" 20

WALL SECTION AND PARTIAL WALL ELEVATION 1/2" = 1'-0" 10

PLOT DATE: 11/10/2025 8:57:21 AM

IDENTIFICATION STAMP
DIV. OF THE STATE ARCHITECT
APP: 02-122821 INC: 2
REVIEWED FOR
SS ☑ FLS ☑ ACS ☑
DATE: 11/20/2025

Teter, Inc. expressly reserves its common law copyright and other property rights in these plans. This document, the ideas and designs incorporated herein, as an instrument of professional service, is not to be used in whole or in part, for any other project without prior written authorization.

MARK	DATE	DESCRIPTION
A.	11/13/2025	DSA BACKCHECK

LICENSED ARCHITECT ★ STATE OF CALIFORNIA ★ CONSTRUCTION CONFORMANCE

TETER, INC.
FRESNO HEADQUARTERS
VISALIA | BAKERSFIELD | MODESTO | SAN LUIS OBISPO
ARCHITECTS ENGINEERS CONNECTED

VISALIA CAMPUS UNIVERSITY CENTER
COLLEGE OF THE SEQUOIAS - INCREMENT 2
915 S. MOONEY BLVD
VISALIA, CALIFORNIA

DRAWING TITLE
WALL SECTIONS AND PARTIAL WALL ELEVATIONS

PROJECT NO.
22-12498

DRAWING
A453.2

\\tet-file1\Users\tara.chong_TETR\Documents\12498-A-UC_tara.chong.rvt

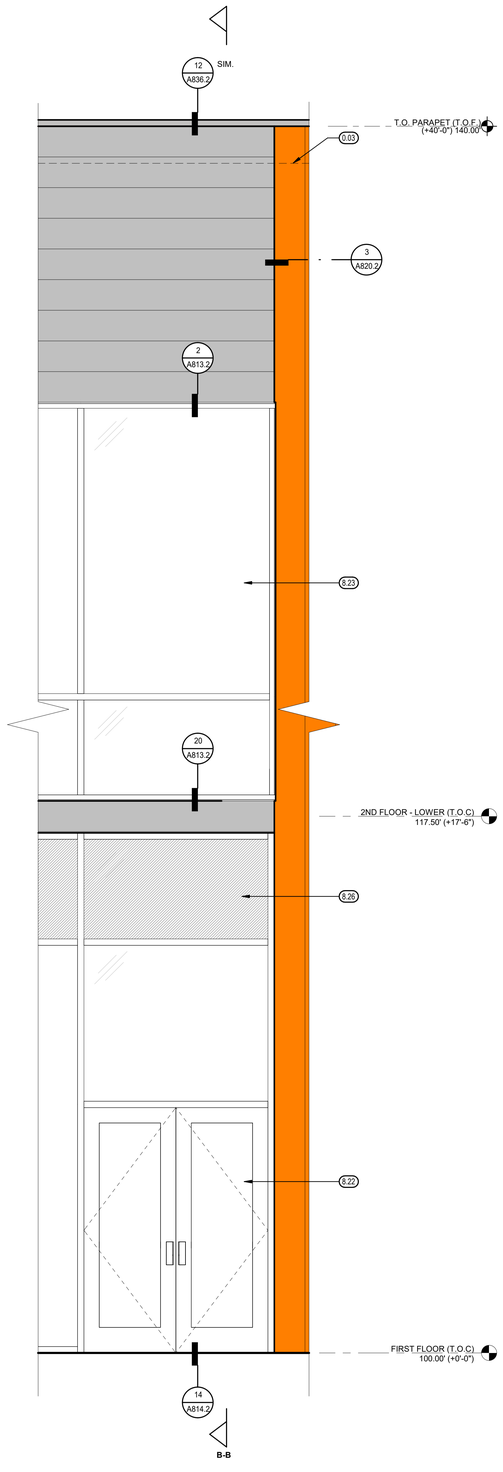

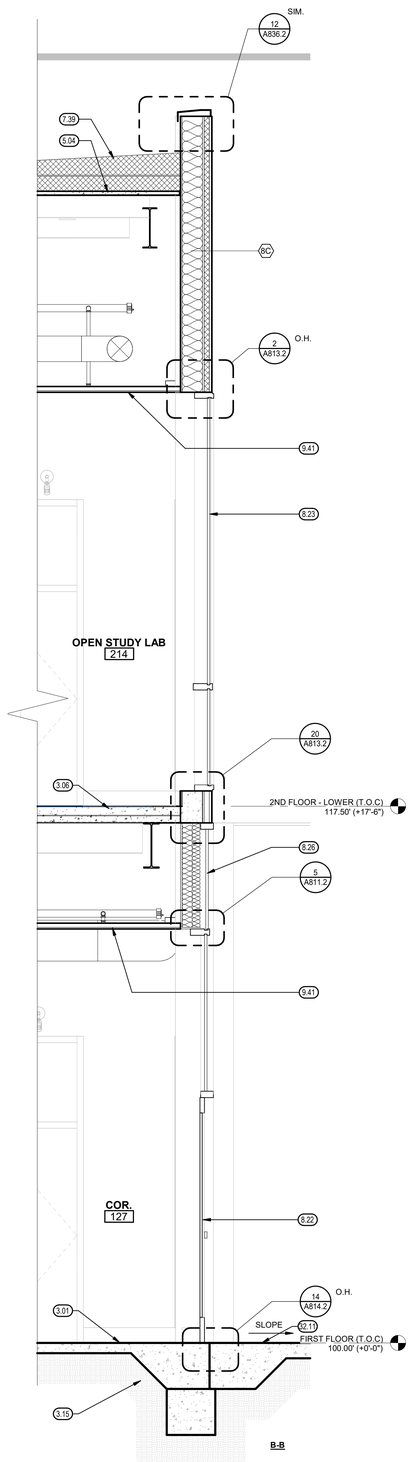

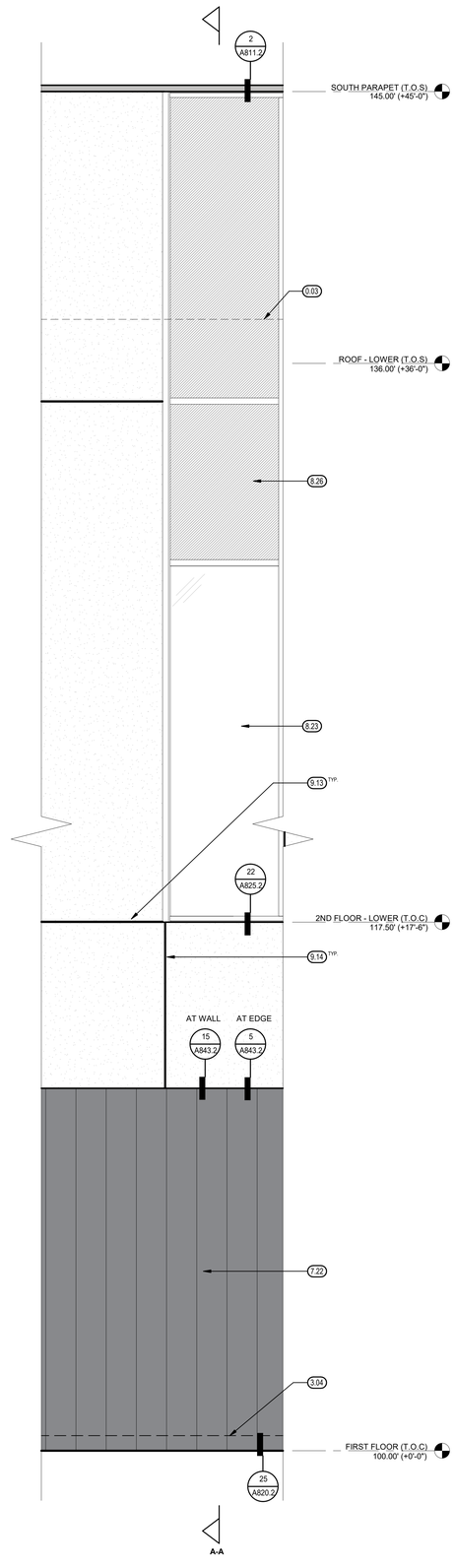

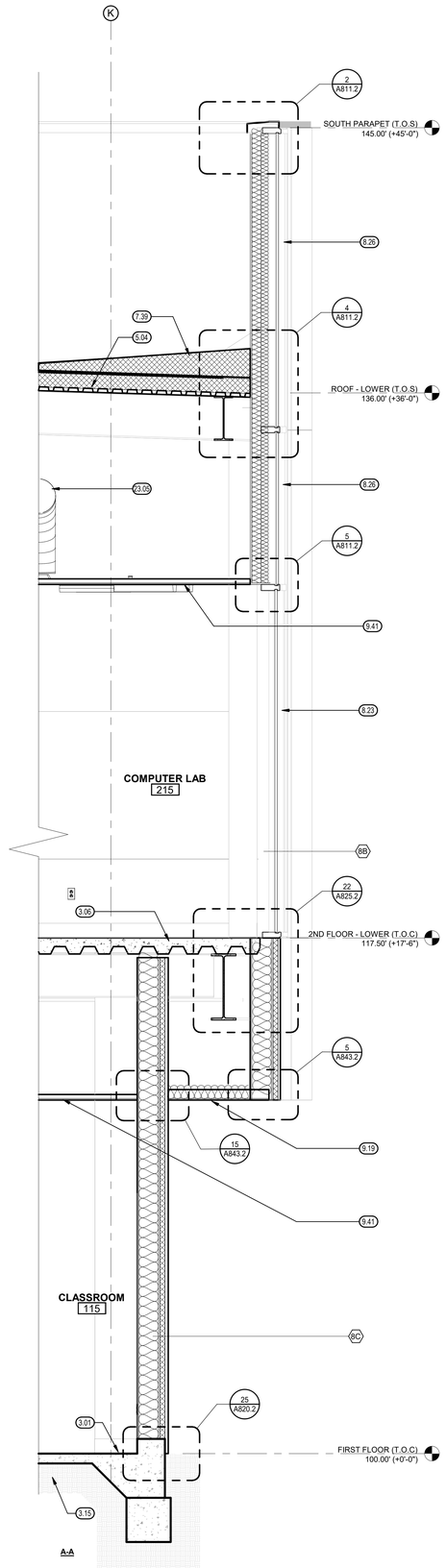

KEYNOTES (0.00)

0.03	ROOF OUTLINE, TYP. - SEE ROOF PLAN
3.01	CONCRETE SLAB, SEE STRUCTURAL
3.04	CONCRETE CURB AT WALL
3.06	CONCRETE SLAB ON METAL DECK, SEE STRUCTURAL
3.15	SEE STRUCTURAL FOR UNDERSLAB REQUIREMENTS
5.04	METAL DECK, SEE STRUCTURAL
7.22	METAL WALL PANEL, VERTICAL SEE **1 / A820.2**
7.39	TAPERED INSULATION CRICKET, TYP.
8.22	ALUMINUM ENTRANCE DOOR(S)
8.23	ALUMINUM CURTAIN WALL, SEE WINDOW SCHEDULE
8.26	SPANDREL GLAZING AS SCHEDULED
9.13	CEMENT PLASTER HORIZONTAL CONTROL JOINT, SEE **12 / A820.2**
9.14	CEMENT PLASTER VERTICAL CONTROL JOINT, SEE **13 / A820.2**
9.19	CEMENT PLASTER SOFFIT
9.41	SUSPENDED ACOUSTIC PANEL CEILING
23.05	DUCT, SEE MECHANICAL
32.11	CONCRETE PAVING/WALK, SEE CIVIL

WALL SECTION AND PARTIAL WALL ELEVATION 1/2" = 1'-0" 20

WALL SECTION AND PARTIAL WALL ELEVATION 1/2" = 1'-0" 10

PLOT DATE: 11/10/2025 8:57:36 AM

IDENTIFICATION STAMP
DIV. OF THE STATE ARCHITECT
APP: 02-122821 INC: 2
REVIEWED FOR
SS ☑ FLS ☑ ACS ☑
DATE: 11/20/2025

Teter, Inc. expressly reserves its common law copyright and other property rights in these plans. This document, the ideas and designs incorporated herein, as an instrument of professional service, is not to be used in whole or part, for any other project without prior written authorization.

MARK	DATE	DESCRIPTION
A.	11/13/2025	DSA BACKCHECK

LICENSED ARCHITECT ★ STATE OF CALIFORNIA ★ CHRISTOPHER J. CHONG ★ C-32121 ★ RENEWAL 08/31/2027

TETER, INC.
FRESNO HEADQUARTERS
VISALIA | BAKERSFIELD | MODESTO | SAN LUIS OBISPO
ARCHITECTS ENGINEERS CONNECTED

TETER

VISALIA CAMPUS UNIVERSITY CENTER
COLLEGE OF THE SEQUOIAS - INCREMENT 2
915 S. MOONEY BLVD
VISALIA, CALIFORNIA

DRAWING TITLE
WALL SECTIONS AND PARTIAL WALL ELEVATIONS

PROJECT NO.
22-12498

DRAWING
A454.2

\\tet-file1\Users\tara.chong_TETR\Documents\12498-A-UC_tara.chong.rvt

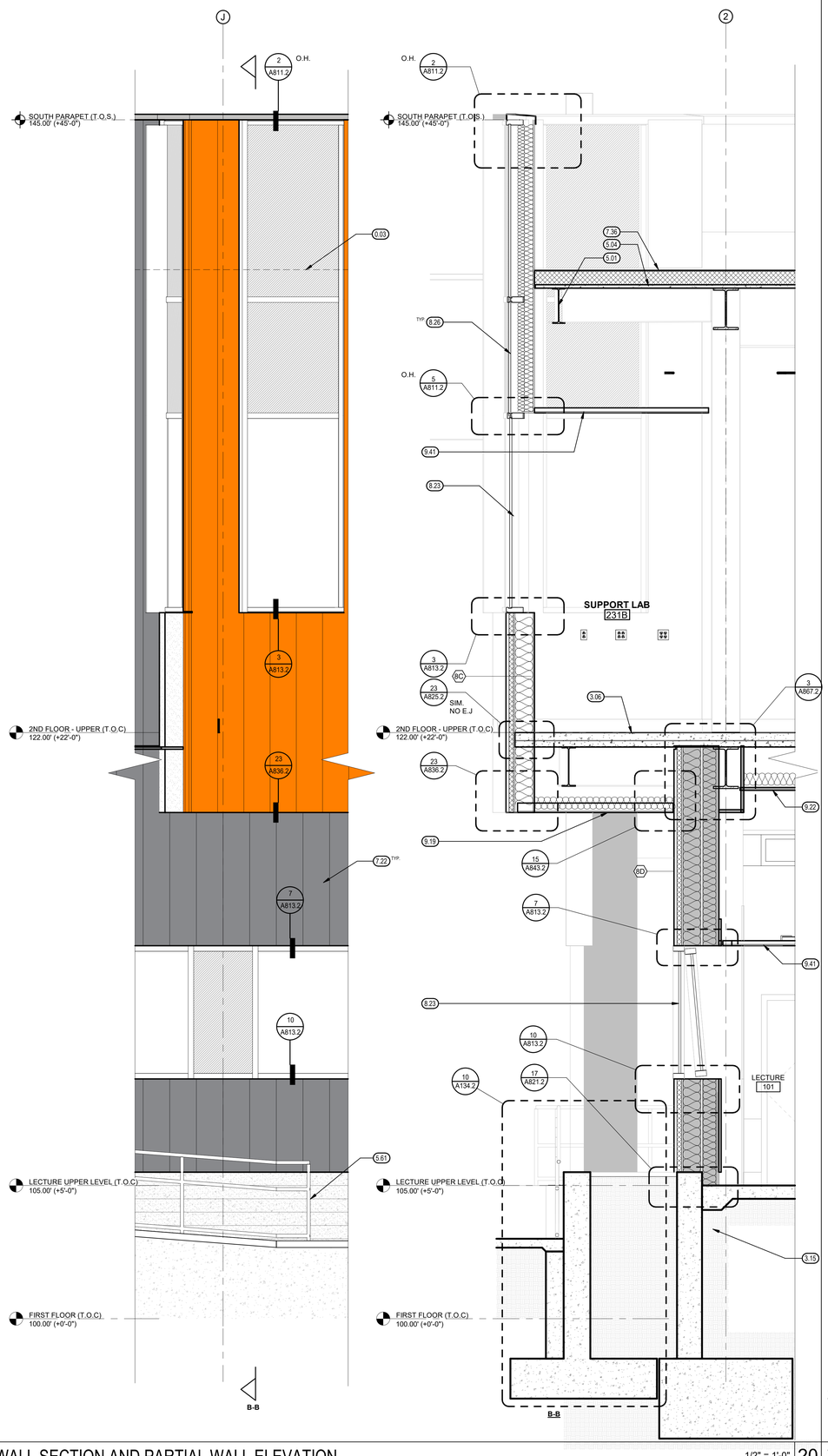

WALL SECTION AND PARTIAL WALL ELEVATION 1/2" = 1'-0" 20

WALL SECTION AND PARTIAL WALL ELEVATION 1/2" = 1'-0" 10

KEYNOTES (0.00)

0.03	ROOF OUTLINE, TYP. - SEE ROOF PLAN
3.06	CONCRETE SLAB ON METAL DECK, SEE STRUCTURAL
3.15	SEE STRUCTURAL FOR UNDERSLAB REQUIREMENTS
5.01	STRUCTURAL STEEL FRAMING, SEE STRUCTURAL
5.04	METAL DECK, SEE STRUCTURAL
5.61	HANDRAIL, TYP. SEE **22 / A134.2**
7.22	METAL WALL PANEL, VERTICAL SEE **1 / A820.2**
7.36	SINGLE PLY ROOFING SYSTEM
8.23	ALUMINUM CURTAIN WALL, SEE WINDOW SCHEDULE
8.26	SPANDREL GLAZING AS SCHEDULED
9.13	CEMENT PLASTER HORIZONTAL CONTROL JOINT, SEE **12 / A820.2**
9.14	CEMENT PLASTER VERTICAL CONTROL JOINT, SEE **13 / A820.2**
9.19	CEMENT PLASTER SOFFIT
9.22	GYPSUM BOARD
9.41	SUSPENDED ACOUSTIC PANEL CEILING

IDENTIFICATION STAMP
DIV. OF THE STATE ARCHITECT
APP: 02-122821 INC: 2
REVIEWED FOR
SS ☑ FLS ☑ ACS ☑
DATE: 11/20/2025

Teter, Inc. expressly reserves its common law copyright and other property rights in these plans. This document, the ideas and designs incorporated herein, as an instrument of professional service, is not to be used in whole or in part, for any other project without prior written authorization.

MARK	DATE	DESCRIPTION
A.	11/13/2025	DSA BACKCHECK

LICENSED ARCHITECT JONATHAN C. TETER No. C-26211 STATE OF CALIFORNIA

TETER, INC.
FRESNO HEADQUARTERS
VISALIA | BAKERSFIELD | MODESTO | SAN LUIS OBISPO
ARCHITECTS ENGINEERS CONNECTED

VISALIA CAMPUS UNIVERSITY CENTER
COLLEGE OF THE SEQUOIAS - INCREMENT 2
915 S. MOONEY BLVD
VISALIA, CALIFORNIA

DRAWING TITLE
WALL SECTIONS AND PARTIAL WALL ELEVATIONS

PROJECT NO.
22-12498

DRAWING
A455.2

PLOT DATE: 11/10/2025 8:57:52 AM

\\tet-file1\Users\tara.chong_TETR\Documents\12498-A-UC_tara.chong.rvt

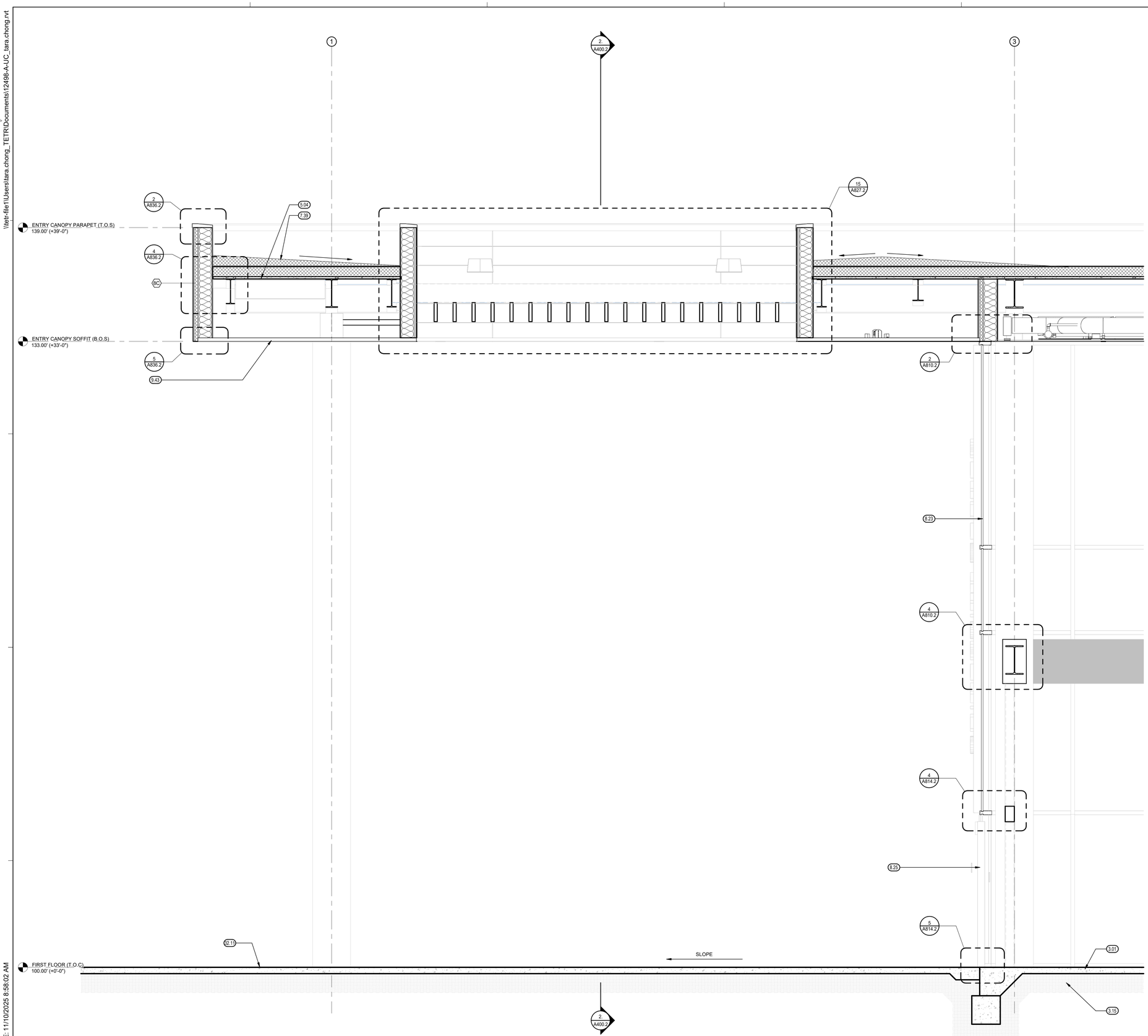

KEYNOTES (00.00)

3.01	CONCRETE SLAB, SEE STRUCTURAL
3.15	SEE STRUCTURAL FOR UNDERSLAB REQUIREMENTS
5.04	METAL DECK, SEE STRUCTURAL
7.39	TAPERED INSULATION CRICKET, TYP.
8.23	ALUMINUM CURTAIN WALL, SEE WINDOW SCHEDULE
8.25	AUTOMATIC ENTRANCE DOOR(S)
9.43	SUSPENDED METAL PANEL CEILING / SOFFIT
32.11	CONCRETE PAVING/WALK, SEE CIVIL

WALL SECTION

1/2" = 1'-0"

PLOT DATE: 11/10/2025 8:58:02 AM

IDENTIFICATION STAMP
DIV. OF THE STATE ARCHITECT
APP: 02-122821 INC: 2
REVIEWED FOR
SS ☑ FLS ☑ ACS ☑
DATE: 11/20/2025

Teter, Inc. expressly reserves its common law copyright and other property rights in these plans. This document, the ideas and designs incorporated herein, as an instrument of professional service, is not to be used in whole or part, for any other project without prior written authorization.

MARK	DATE	DESCRIPTION
A	11/13/2025	DSA BACKCHECK

LICENSED ARCHITECT STATE OF CALIFORNIA

TETER, INC.
FRESNO HEADQUARTERS
VISALIA | BAKERSFIELD | MODESTO | SAN LUIS OBISPO
ARCHITECTS ENGINEERS CONNECTED

VISALIA CAMPUS UNIVERSITY CENTER
COLLEGE OF THE SEQUOIAS - INCREMENT 2
915 S. MOONEY BLVD
VISALIA, CALIFORNIA

DRAWING TITLE
WALL SECTIONS AND PARTIAL WALL ELEVATIONS

PROJECT NO.
22-12498

DRAWING
A456.2

\\tet-file1\Users\tara.chong_TETR\Documents\12498-A-UC_tara.chong.rvt

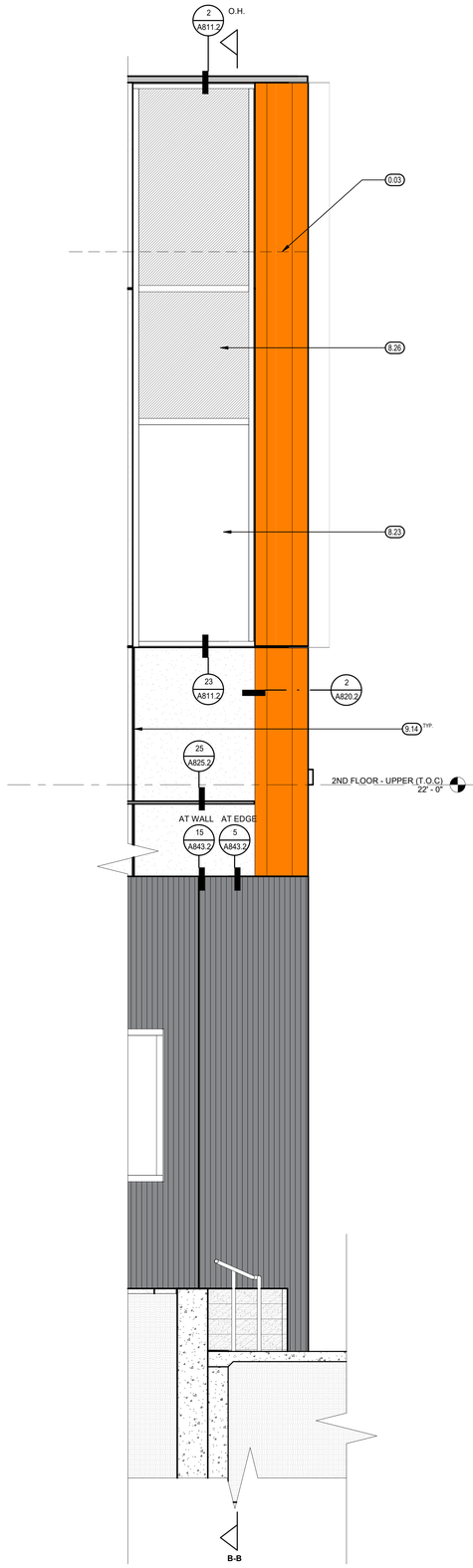

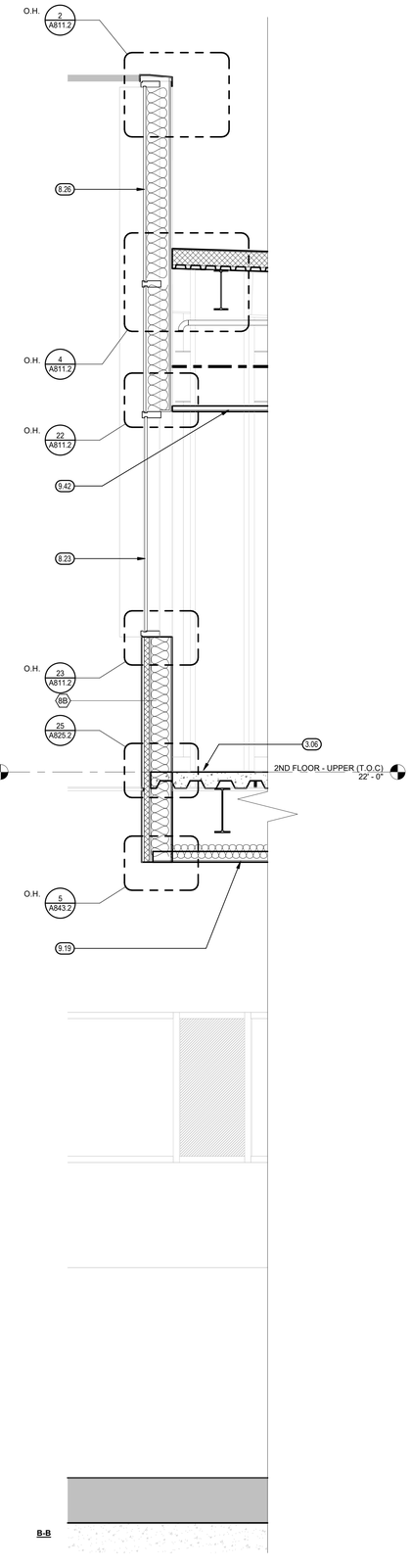

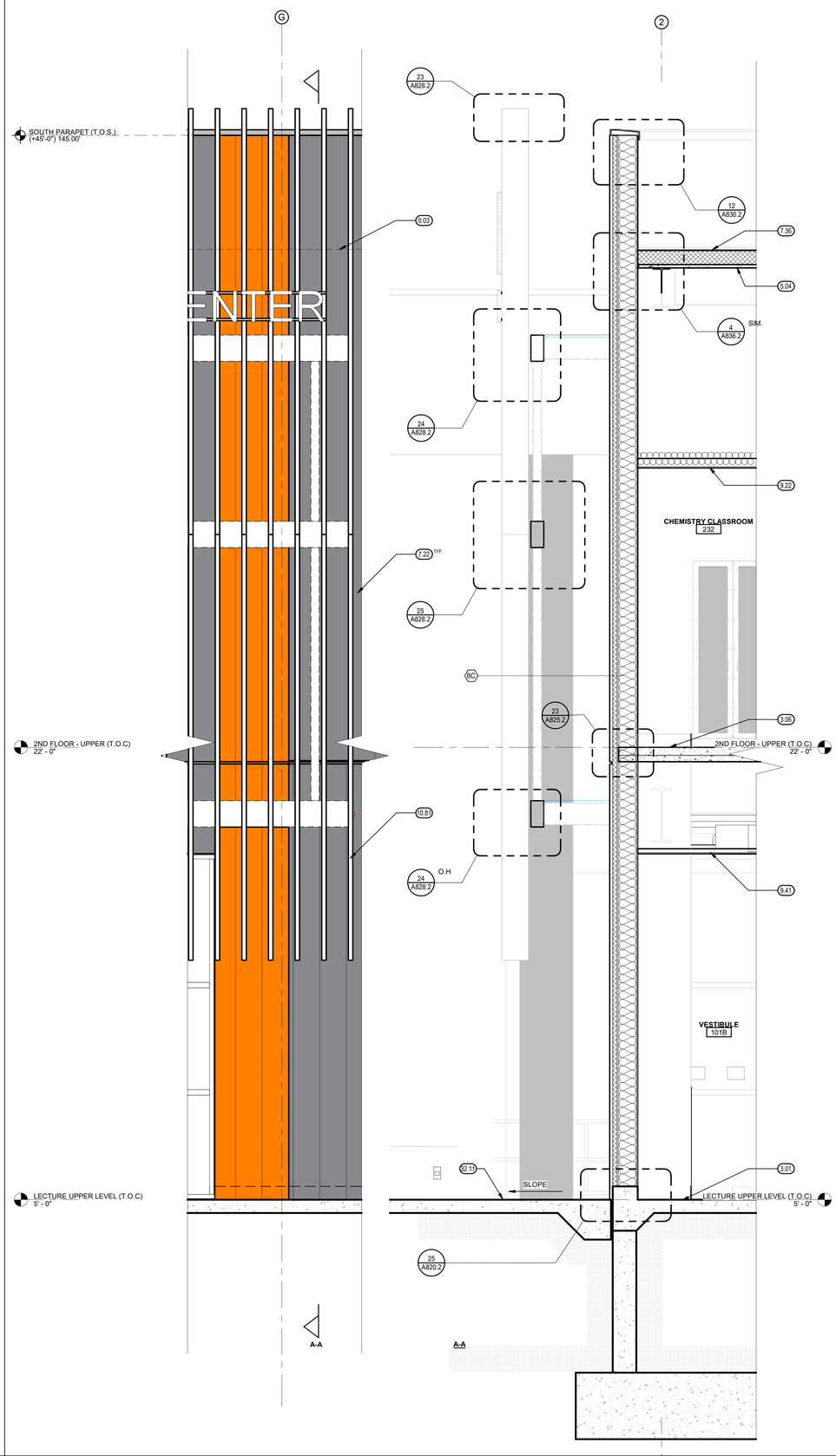

KEYNOTES 00.00

0.03	ROOF OUTLINE, TYP. - SEE ROOF PLAN
3.01	CONCRETE SLAB, SEE STRUCTURAL
3.06	CONCRETE SLAB ON METAL DECK, SEE STRUCTURAL
5.04	METAL DECK, SEE STRUCTURAL
7.22	METAL WALL PANEL, VERTICAL SEE **1 / A820.2**
7.36	SINGLE PLY ROOFING SYSTEM
8.23	ALUMINUM CURTAIN WALL, SEE WINDOW SCHEDULE
8.26	SPANDREL GLAZING AS SCHEDULED
9.14	CEMENT PLASTER VERTICAL CONTROL JOINT, SEE **13 / A820.2**
9.19	CEMENT PLASTER SOFFIT
9.22	GYPSUM BOARD
9.41	SUSPENDED ACOUSTIC PANEL CEILING
9.42	SUSPENDED ACOUSTIC PANEL CEILING, WASHABLE
10.81	VERTICAL BRISE SOLEIL, SEE **5 / A828.2**
32.11	CONCRETE PAVING/WALK, SEE CIVIL

WALL SECTION AND PARTIAL WALL ELEVATION 1/2" = 1'-0" 20

WALL SECTIONS AND PARTIAL WALL ELEVATIONS 1/2" = 1'-0" 10

IDENTIFICATION STAMP
DIV. OF THE STATE ARCHITECT
APP: 02-122821 INC: 2
REVIEWED FOR
SS ☑ FLS ☑ ACS ☑
DATE: 11/20/2025

Tetter, Inc. expressly reserves its common law copyright and other property rights in these plans. This document, the ideas and designs incorporated herein, as an instrument of professional service, is not to be used in whole or in part, for any other project without prior written authorization.

MARK	DATE	DESCRIPTION
A.	11/13/2025	DSA BACKCHECK

LICENSED ARCHITECT STATE OF CALIFORNIA

TETER, INC.
FRESNO HEADQUARTERS
VISALIA | BAKERSFIELD | MODESTO | SAN LUIS OBISPO
ARCHITECTS ENGINEERS CONNECTED

VISALIA CAMPUS UNIVERSITY CENTER
COLLEGE OF THE SEQUOIAS - INCREMENT 2
915 S. MOONEY BLVD
VISALIA, CALIFORNIA

DRAWING TITLE
WALL SECTIONS AND PARTIAL WALL ELEVATIONS

PROJECT NO.
22-12498

DRAWING
A457.2

PLOT DATE: 11/10/2025 8:58:17 AM

KEYNOTES 00.00

3.01	CONCRETE SLAB, SEE STRUCTURAL
3.06	CONCRETE SLAB ON METAL DECK, SEE STRUCTURAL
11.31	PROJECTION SCREEN, WALL MOUNTED

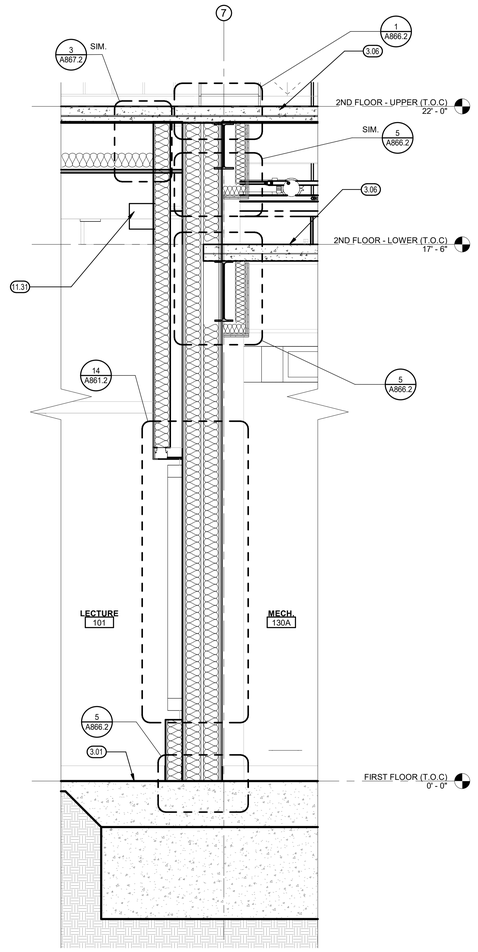

LECTURE ROOM TEACHING WALL 1/2" = 1'-0" 10

IDENTIFICATION STAMP
DIV. OF THE STATE ARCHITECT
APP: 02-122821 INC: 2
REVIEWED FOR
SS ☑ FLS ☑ ACS ☑
DATE: 11/20/2025

Teter, Inc. expressly reserves its common law copyright and other property rights in these plans. This document, the ideas and designs incorporated herein, as an instrument of professional service, is not to be used in whole or in part, for any other project without prior written authorization.

MARK	DATE	DESCRIPTION
A	11/13/2025	DSA BACKCHECK

LICENSED ARCHITECT JOHNNY CHAN COUNTY OF TULARE STATE OF CALIFORNIA

TETER, INC.
FRESNO HEADQUARTERS
VISALIA | BAKERSFIELD | MODESTO | SAN LUIS OBISPO
ARCHITECTS ENGINEERS CONNECTED

VISALIA CAMPUS UNIVERSITY CENTER
COLLEGE OF THE SEQUOIAS - INCREMENT 2
915 S. MOONEY BLVD
VISALIA, CALIFORNIA

DRAWING TITLE
WALL SECTION AND ELEVATIONS

PROJECT NO.
22-12498

DRAWING
A458.2

\\tetr-file1\Users\tara.chong_TETR\Documents\12498-A-UC_tara.chong.rvt

PLOT DATE: 11/10/2025 8:58:27 AM

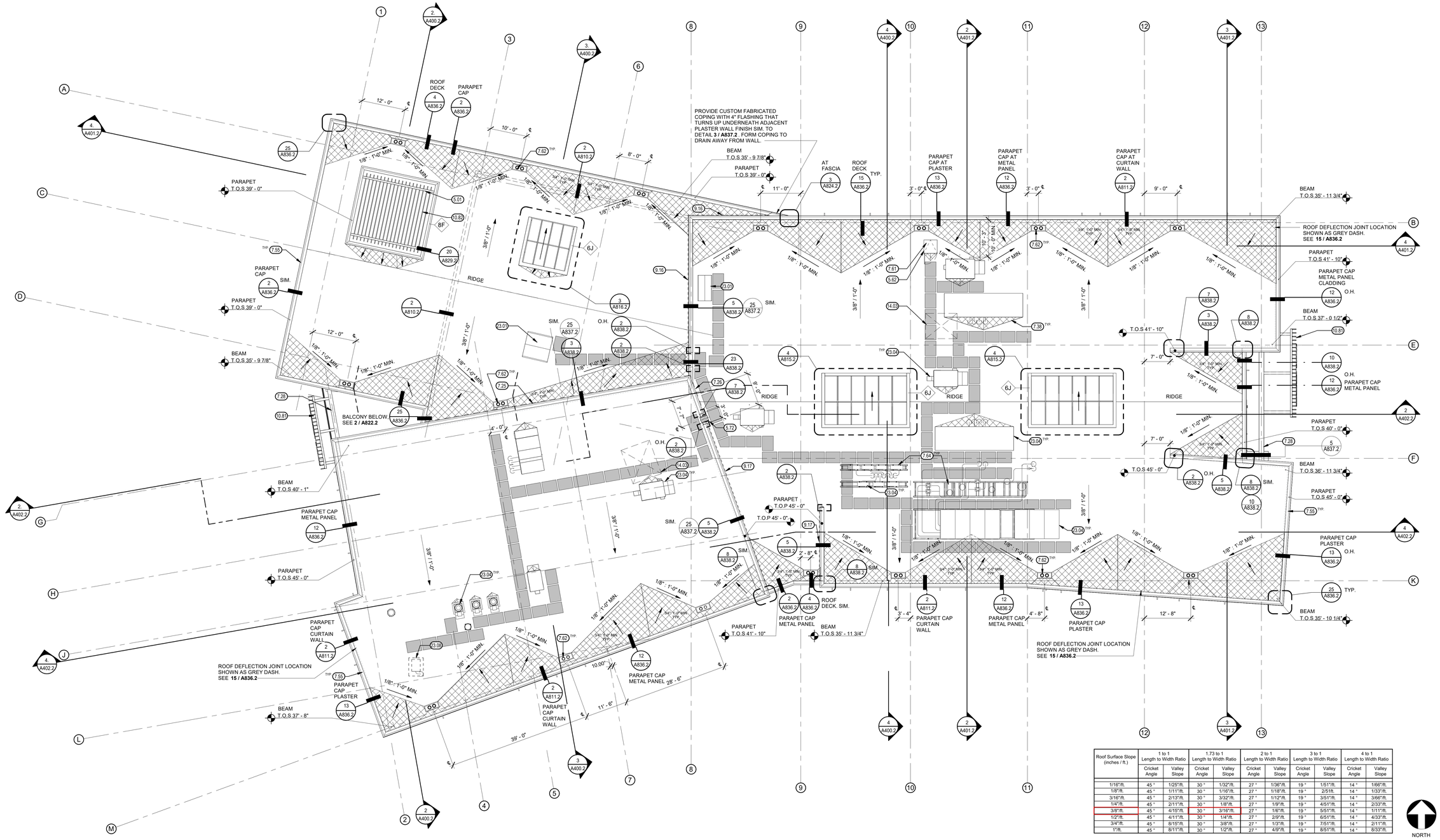

Roof Surface Slope (inches / ft.)	1 to 1 Length to Width Ratio		1.73 to 1 Length to Width Ratio		2 to 1 Length to Width Ratio		3 to 1 Length to Width Ratio		4 to 1 Length to Width Ratio	
	Cricket Angle	Valley Slope	Cricket Angle	Valley Slope	Cricket Angle	Valley Slope	Cricket Angle	Valley Slope	Cricket Angle	Valley Slope
1/16"/ft.	45 °	1/25"/ft.	30 °	1/32"/ft.	27 °	1/36"/ft.	19 °	1/51"/ft.	14 °	1/66"/ft.
1/8"/ft.	45 °	1/11"/ft.	30 °	1/16"/ft.	27 °	1/18"/ft.	19 °	2/51ft.	14 °	1/33"/ft.
3/16"/ft.	45 °	2/13"/ft.	30 °	3/32"/ft.	27 °	1/12"/ft.	19 °	3/51"/ft.	14 °	3/66"/ft.
1/4"/ft.	45 °	2/11"/ft.	30 °	1/8"/ft.	27 °	1/9"/ft.	19 °	4/51"/ft.	14 °	2/33"/ft.
3/8"/ft.	45 °	4/15"/ft.	30 °	3/16"/ft.	27 °	1/6"/ft.	19 °	5/51"/ft.	14 °	1/11"/ft.
1/2"/ft.	45 °	4/11"/ft.	30 °	1/4"/ft.	27 °	2/9"/ft.	19 °	6/51"/ft.	14 °	4/33"/ft.
3/4"/ft.	45 °	8/15"/ft.	30 °	3/8"/ft.	27 °	1/3"/ft.	19 °	7/51"/ft.	14 °	2/11"/ft.
1"/ft.	45 °	8/11"/ft.	30 °	1/2"/ft.	27 °	4/9"/ft.	19 °	8/51"/ft.	14 °	8/33"/ft.

NORTH

OVERALL ROOF PLAN

3/32" = 1'-0" | 4

KEYNOTES (x0.00)

- 5.01 STRUCTURAL STEEL FRAMING, SEE STRUCTURAL
- 5.62 GUARDRAIL AT PLATFORM, TYP. SEE ELEVATION
- 5.72 LADDER, ROOF TO ROOF WITH STEP OVER PLATFORM AND GUARDS, SEE **25 / A838.2**
- 7.25 METAL PANEL CLADDING ON WALL DOWN TO REGLET (SHOWN DASHED)
- 7.26 METAL PANEL CLADDING ON WALL DOWN TO REGLET (SHOWN DASHED)
- 7.28 BEAM ENCLOSURE, SEE **2 / A827.2**
- 7.38 CRICKETS ON ROOF HIGH SIDE AT MECH. EQUIP., TYP.
- 7.55 PARAPET CAP, SEE **2 / A811.2**,**2 / A836.2** ,**12 / A836.2**,**13 / A836.2** & **25 / A836.2**
- 7.61 ROOF ACCESS HATCH, SEE **22 / A835.2**
- 7.62 ROOF DRAIN AND OVERFLOW, SEE PLUMBING AND **1 / A835.2**
- 7.64 SUPPORT RAIL PIPE SUPPORTS (SEE STRUCTURAL) FLASH PER **3 / A835.2**
- 9.16 CEMENT PLASTER FINISH ON WALL DOWN TO REGLET AT +39'-4"+/- (SHOWN DASHED)
- 9.17 CEMENT PLASTER FINISH ON WALL DOWN TO REGLET AT +42'-2"+/- (SHOWN DASHED)
- 10.81 VERTICAL BRISE SOLEIL, SEE **1 / A828.2** & **2 / A829.2**
- 10.82 HORIZONTAL BRISE SOLEIL, SEE STRUCTURAL & **12 / A827.2**
- 14.03 ELEVATOR SHAFT BELOW, SEE SHEET A853.2
- 23.01 HVAC EQUIPMENT, SEE MECHANICAL
- 23.04 MECHANICAL EQUIPMENT, SEE MECHANICAL, TYP.
- 23.08 MECHANICAL EQUIPMENT FOR WALK-IN COOLER BY COOLER MANUFACTURER

LEGEND

- INDICATES DOWNWARD DIRECTION OF ROOF SLOPE MIN. SLOPE IN ANY DIRECTION SHALL NOT BE LESS THAN 1/4" :12", 1/8" :12 AT VALLEYS
- RD OD — ROOF DRAIN / OVER FLOW DRAIN, SEE **1 / A835.2** AND PLUMBING DRAWINGS
- SINGLE-PLY ROOFING SYSTEM o/ COVERBOARD o/ 6" POLYISO RIGID INSULATION o/ METAL DECK, FOR SEAM LAP INFO, SEE **18 / A835.2** & **19 / A835.2** ROOFING MATERIALS SHALL BE LISTED AND IDENTIFIED AS **CLASS 'A'** BY AN APPROVED TESTING AGENCY.
- SINGLE-PLY ROOFING SYSTEM o/ COVERBOARD o/ BUILT-UP CRICKET TAPERED INSULATION o/ 6" POLYISO RIGID INSULATION o/ METAL DECK, SLOPE CRICKET 2% MIN. TO VALLEYS & ROOD DRAIN SUMPS. ROOFING MATERIALS SHALL BE LISTED AND IDENTIFIED AS **CLASS 'A'** BY AN APPROVED TESTING AGENCY
- 3" MIN / 4" MAX — WALKWAY PROTECTION PAD

SOLAR READY CALCULATIONS

PER CEC SECTION 110.10, MANDATORY SOLAR READY BUILDING REQUIREMENTS:

A. CEC SECTION 110.10(B)1: MINIMUM INDIVIDUAL AREA SHALL BE 160 SF.

B. CEC SECTION 110.10(B)1: MINIMUM TOTAL AREA SHALL BE 15 PERCENT OF THE TOTAL ROOF AREA.

C. REQUIRED ROOF AREA: 25,750 SF X 0.15 = 3,863 SF

D. ACTUAL SOLAR READY AREA PROVIDED: 4,540 SF

NOTE: PHOTOVOLTAIC SHADE STRUCTURES PROVIDED IN ADJACENT PARKING LOT. SEE SITE PLAN FOR LOCATION.

GENERAL NOTES

A. FOR TYPICAL PIPE THROUGH ROOF PENETRATIONS, SEE **3 / A835.2** & **4 / A835.2**

B. PROVIDE SEPARATE DRAIN LINES FOR ROOF DRAINS AND OVERFLOW DRAINS. PROVIDE ALL HANGERS AND SUPPORTS FOR PIPE AS REQUIRED PER CODE. SEE PLUMBING FOR DRAIN LINES.

C. FOR TYPICAL ROOF PENETRATION CLEARANCES, SEE **9 / A835.2**

D. FOR EXHAUST FAN OPENING THROUGH ROOF, SEE **12 / A835.2** & MECHANICAL.

E. FOR TYPICAL HVAC EQUIPMENT CURB, SEE **10 / A835.2** & MECHANICAL.

F. FOR TYPICAL HVAC EQUIPMENT PLATFORM, SEE **5 / A835.2**

G. FOR ROOFING ATTACHMENT AND WIND LOAD RESISTANCE, SEE **1 / A837.2**

PLOT DATE: 11/10/2025 8:58:53 AM

\\tet-file1\Users\tara.chong_TETR\Documents\12498-A-UC_tara.chong.rvt

IDENTIFICATION STAMP
DIV. OF THE STATE ARCHITECT
APP: 02-122821 INC: 2
REVIEWED FOR
SS ☑ FLS ☑ ACS ☑
DATE: 11/20/2025

Teter, Inc. expressly reserves its common law copyright and other property rights in these plans. This document, the ideas and designs incorporated herein, as an instrument of professional service, is not to be used in whole or part, for any other project without prior written authorization.

MARK	DATE	DESCRIPTION
A.	11/13/2025	DSA BACKCHECK

LICENSED ARCHITECT ★ REGISTERED PROFESSIONAL ENGINEER ★ STATE OF CALIFORNIA

TETER, INC.
FRESNO HEADQUARTERS
VISALIA | BAKERSFIELD | MODESTO | SAN LUIS OBISPO
ARCHITECTS ENGINEERS CONNECTED

VISALIA CAMPUS UNIVERSITY CENTER
COLLEGE OF THE SEQUOIAS - INCREMENT 2
915 S. MOONEY BLVD
VISALIA, CALIFORNIA

DRAWING TITLE
ROOF PLAN

PROJECT NO.
22-12498

DRAWING
A500.2

\\tet-file1\Users\tara.chong_TETR\Documents\12498-A-UC_tara.chong.rvt

IDENTIFICATION STAMP
DIV. OF THE STATE ARCHITECT
APP: 02-122821 INC: 2
REVIEWED FOR
SS ☑ FLS ☑ ACS ☑
DATE: 11/20/2025

Teter, Inc. expressly reserves its common law copyright and other property rights in these plans. This document, the ideas and designs incorporated herein, as an instrument of professional service, is not to be used in whole or part, for any other project without prior written authorization.

MARK	DATE	DESCRIPTION
A.	11/13/2025	DSA BACKCHECK



REFLECTED CEILING PLAN - FIRST FLOOR

3/32" = 1'-0" | 4

KEYNOTES (0.00)

0.02	LINE OF ROOF ABOVE
0.07	SECOND FLOOR CEILING OPENING TO SLOPED GALZING
3.13	1 HR FIRE RATED DECK PER UL D902, SEE **14 / A870.2**
5.01	STRUCTURAL STEEL FRAMING, SEE STRUCTURAL
5.41	EXTERIOR BEAM ENCLOSURE, SEE **2 / A827.2**
5.43	METAL BAR GRATING
5.44	BEAM ENCLOSURE, SEE **18 / A826.2**
5.45	COLUMN ENCLOSURE, SEE **7 / A826.2**
5.74	ACCESS LADDER, SEE **26 / A838.2**
10.18	LOBBY SIGNAGE, SEE **1 / A865.2**
10.81	VERTICAL BRISE SOLEIL, SEE **5 / A828.2** & **5 / A829.2**
11.31	PROJECTION SCREEN, WALL MOUNTED
11.32	PROJECTION SCREEN, CEILING MOUNTED, RECESSED, SEE **28 / A841.2**
11.33	PROJECTOR MOUNT, CEILING SUPPORTED, SEE **15 / A847.2**
23.01	HVAC EQUIPMENT, SEE MECHANICAL
23.04	MECHANICAL EQUIPMENT, SEE MECHANICAL, TYP.
26.26	RECESSED LIGHT FIXTURE, SEE ELECTRICAL
26.27	RECESSED CEILING LIGHT, SEE ELECTRICAL

LEGEND

ACP-1	2' x 4' GRID SUSPENDED ACOUSTIC PANEL CEILING; CAPPED WIDE GRID, WHITE; SEE **2 / A841.2**
ACP-2	2' x 6' AND 2' x 2' GRID SUSPENDED ACOUSTIC PANEL CEILING; NARROW GRID WITH BOLT-SLOT REVEAL, WHITE; SEE **24 / A846.2**
ACP-3	2' x 8' GRID SUSPENDED ACOUSTIC PANEL CEILING; NARROW GRID WITH BOLT-SLOT REVEAL, CUSTOM ORANGE COLOR; SEE **4 / A846.2** AND **14 / A846.2**
ACP-4	2' x 4' GRID SUSPENDED ACOUSTIC PANEL CEILING; NARROW GRID WITH BOLT-SLOT REVEAL; LIGHT GREY COLOR SEE **2 / A841.2**
ACP-5	2' x 4' AND 4" x 4' GRID SUSPENDED ACOUSTIC PANEL CEILING; NARROW GRID WITH BOLT-SLOT REVEAL; CUSTOM GREY COLOR SEE**5 / A844.2**, **15 / A844.2** AND **25 / A844.2**
ACP-6	2' x 4' GRID SUSPENDED ACOUSTIC PANEL CEILING; WASHABLE PANELS, CAPPED NARROW GRID; WHITE SEE **2 / A841.2**

SUSPENDED LINEAR METAL CEILING, SILVER SATIN FINISH
INTERIOR: PERFORATED PANELS, SEE **2 / A842.2**
EXTERIOR: NON-PERFORATED WITH SNAP-LOC INSERTS SEE **2 / A842.2**

EXTERIOR CEMENT PLASTER SOFFIT O/ METAL CEILING JOISTS/FRAMING, SEE STRUCTURAL AND **12 / A840.2**

5/8" TYPE "X" GYP. BD. O/ METAL CEILING JOISTS. SEE **2 / A840.2**

5/8" TYPE "X" GYP. BD. O/ METAL CEILING JOISTS. CUSTOM ORANGE SEE **2 / A840.2**

METAL PANEL O/ 5/8" GYP. BD. O/ METAL CEILING JOISTS
BROWN TIMBER SEE **9 / A830.2**

1HR FIRE RATED CEILING ASSEMBLY, SEE **2 / A840.2** AND **15 / A873.2**

ROOM 101 — ROOM SYMBOL
1'-0" — CEILING HEIGHT
ELECTRICAL LIGHT FIXTURE, SEE ELECTRICAL
EXIT SIGN, SEE ELECTRICAL
MECHANICAL GRILLES, SEE MECHANICAL
SPRINKLER HEAD, SEE FIRE DRAWINGS
CEILING ACCESS DOOR, SEE **5 / A840.2**
1 HR FIRE RATED ASSEMBLY SEE A001.2 FOR PARTITION TYPES. SEE A870.2, A871.2 AND A872.2 FOR FIRE RESISTIVE CONSTRUCTION

GENERAL NOTES

A. KEYNOTES TO APPLY TO THIS DRAWING ONLY.
B. FOR SUPPORT REQUIREMENTS FOR MECHANICAL AND ELECTRICAL, SEE MECHANICAL AND ELECTRICAL DRAWINGS
C. ALL EXPOSED CEILINGS/ STRUCTURE TO BE PAINTED, U.N.O.
D. FOR PENETRATIONS OF FIRE RATED ASSEMBLIES SEE **2 / A870.2** , **5 / A870.2** **7 / A870.2** , **10 / A870.2** , **12 / A870.2** , **13 / A871.2**

TETER, INC.
FRESNO HEADQUARTERS
VISALIA | BAKERSFIELD | MODESTO | SAN LUIS OBISPO
ARCHITECTS ENGINEERS CONNECTED

VISALIA CAMPUS UNIVERSITY CENTER
COLLEGE OF THE SEQUOIAS - INCREMENT 2
915 S. MOONEY BLVD
VISALIA, CALIFORNIA

DRAWING TITLE
REFLECTED CEILING PLAN - FIRST FLOOR

PROJECT NO.
22-12498

DRAWING
A610.2

PLOT DATE: 11/10/2025 8:59:22 AM

\\tet-file1\Users\tara.chong_TETR\Documents\12498-A-UC_tara.chong.rvt

IDENTIFICATION STAMP
DIV. OF THE STATE ARCHITECT
APP: 02-122821 INC: 2
REVIEWED FOR
SS ☑ FLS ☑ ACS ☑
DATE: 11/20/2025

Teter, Inc. expressly reserves its common law copyright and other property rights in these plans. This document, the ideas and designs incorporated herein, as an instrument of professional service, is not to be used in whole or part, for any purpose without prior written authorization.

MARK	DATE	DESCRIPTION
A.	11/13/2025	DSA BACKCHECK

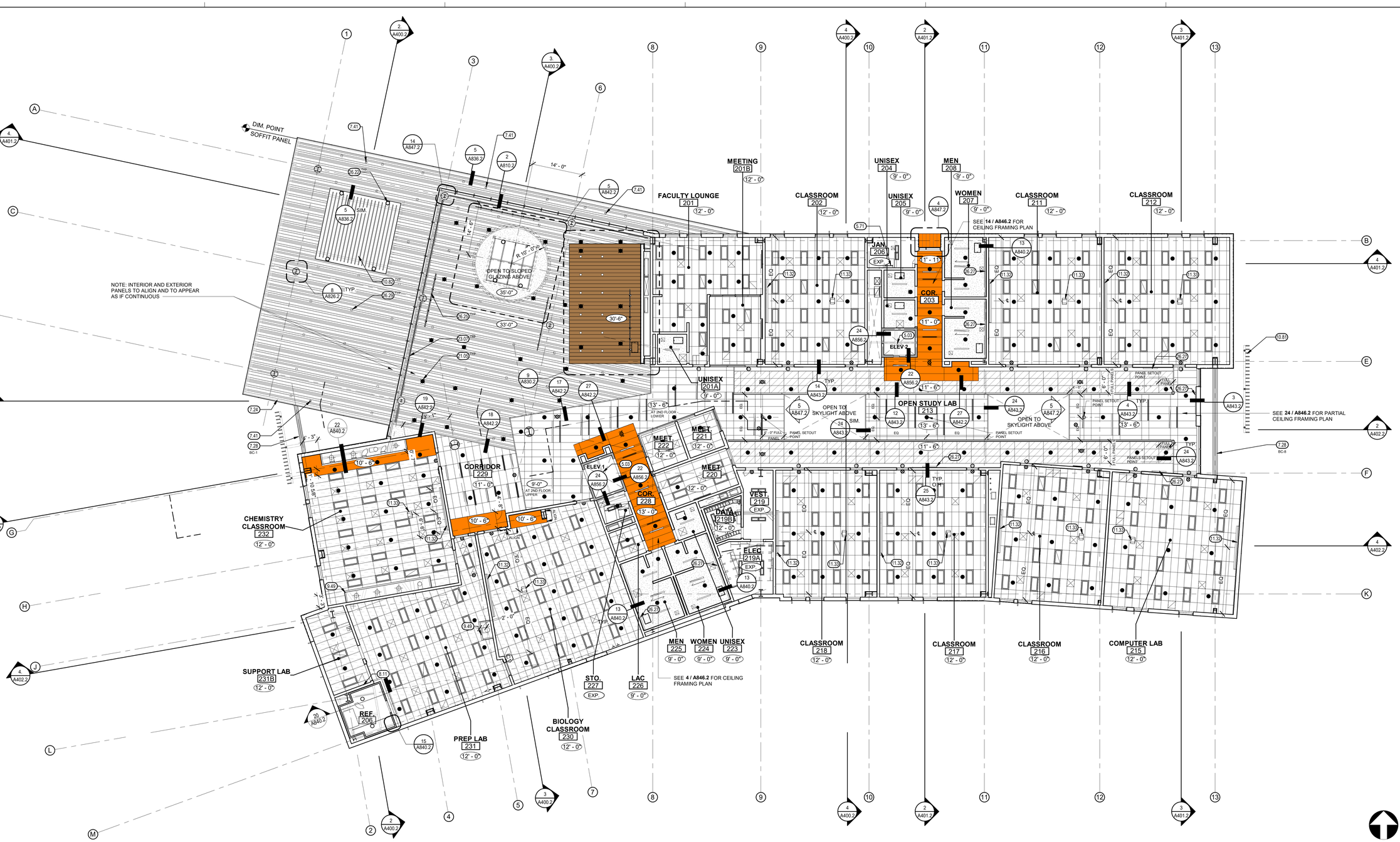

REFLECTED CEILING PLAN -SECOND FLOOR

3/32" = 1'-0" | 4

KEYNOTES

5.03	ELEVATOR HOIST BEAM, SEE STRUCTURAL.
5.71	LADDER TO ROOF, SEE **23 / A835.2**
7.24	FINAL METAL SOFFIT PANEL TO BE 4" WIDTH MINIMUM
7.28	BEAM ENCLOSURE, SEE **2 / A827.2**
7.41	SOFFIT OVERFLOW TO BE CENTERED IN SOFFIT PANEL. SEE PLUMBING AND **2 / A843.2**
8.11	20"W X 30"H WALL ACCESS DOOR AT MIN.3" ABOVE TOP OF COOLER BOX, SEE **3 / A840.2** (VERIFY LOCATION IN FIELD)
9.49	DUCT CHASE ENCLOSURE, SEE **25 / A840.2**
10.81	VERTICAL BRISE SOLEIL, SEE **5 / A828.2** & **5 / A829.2**
10.82	HORIZONTAL BRISE SOLEIL, SEE STRUCTURAL & **15 / A827.2**
11.32	PROJECTION SCREEN, CEILING MOUNTED, RECESSED, SEE **28 / A841.2**
11.33	PROJECTOR MOUNT, CEILING SUPPORTED, SEE **15 / A847.2**
21.05	ENTRY LOBBY FIRE SPRINKLER, SEE FIRE AND **1 / A843.2**
23.07	CEILING REGISTER, SEE MECHANICAL
26.22	WALL MOUNTED LIGHT FIXTURE, SEE ELECTRICAL
26.25	TRACK LIGHTING, SEE ELECTRICAL
26.27	RECESSED CEILING LIGHT, SEE ELECTRICAL
26.29	CAN LIGHT, SEE ELECTRICAL AND **20 / A842.2**

LEGEND

ACP-1	2' x 4' GRID SUSPENDED ACOUSTIC PANEL CEILING; CAPPED WIDE GRID, WHITE; SEE **2 / A841.2**
ACP-2	2' x 6' AND 2' x 2' GRID SUSPENDED ACOUSTIC PANEL CEILING; NARROW GRID WITH BOLT-SLOT REVEAL, WHITE; SEE **24 / A846.2**
ACP-3	2' x 8' GRID SUSPENDED ACOUSTIC PANEL CEILING; NARROW GRID WITH BOLT-SLOT REVEAL, CUSTOM ORANGE COLOR; SEE **4 / A846.2** AND **14 / A846.2**
ACP-4	2' x 4' GRID SUSPENDED ACOUSTIC PANEL CEILING; NARROW GRID WITH BOLT-SLOT REVEAL; LIGHT GREY COLOR SEE **2 / A841.2**
ACP-5	2' x 4' AND 4" x 4' GRID SUSPENDED ACOUSTIC PANEL CEILING; NARROW GRID WITH BOLT-SLOT REVEAL; CUSTOM GREY COLOR SEE**5 / A844.2**, **15 / A844.2** AND **25 / A844.2**
ACP-6	2' x 4' GRID SUSPENDED ACOUSTIC PANEL CEILING; WASHABLE PANELS, CAPPED NARROW GRID; WHITE SEE **2 / A841.2**
	SUSPENDED LINEAR METAL CEILING, SILVER SATIN FINISH INTERIOR: PERFORATED PANELS, SEE **2 / A842.2** EXTERIOR: NON-PERFORATED WITH SNAP-LOC INSERTS SEE **2 / A842.2**
	EXTERIOR CEMENT PLASTER SOFFIT O/ METAL CEILING JOISTS/FRAMING, SEE STRUCTURAL AND **12 / A840.2**
	5/8" TYPE "X" GYP. BD. O/ METAL CEILING JOISTS. SEE **2 / A840.2**
	5/8" TYPE "X" GYP. BD. O/ METAL CEILING JOISTS. CUSTOM ORANGE SEE **2 / A840.2**
	METAL PANEL O/ 5/8" GYP. BD. O/ METAL CEILING JOISTS BROWN TIMBER SEE **9 / A830.2**
	1HR FIRE RATED CEILING ASSEMBLY, SEE **2 / A840.2** AND **15 / A873.2**

ROOM 101 — ROOM SYMBOL
1'-0" — CEILING HEIGHT
ELECTRICAL LIGHT FIXTURE, SEE ELECTRICAL
EXIT SIGN, SEE ELECTRICAL
MECHANICAL GRILLES, SEE MECHANICAL
SPRINKLER HEAD, SEE FIRE DRAWINGS
CEILING ACCESS DOOR, SEE **5 / A840.2**
1 HR FIRE RATED ASSEMBLY SEE A001.2 FOR PARTITION TYPES. SEE A870.2, A871.2 AND A872.2 FOR FIRE RESISTIVE CONSTRUCTION

GENERAL NOTES

A. KEYNOTES TO APPLY TO THIS DRAWING ONLY.
B. FOR SUPPORT REQUIREMENTS FOR MECHANICAL AND ELECTRICAL, SEE MECHANICAL AND ELECTRICAL DRAWINGS
C. ALL EXPOSED CEILINGS/ STRUCTURE TO BE PAINTED, U.N.O.
D. FOR PENETRATIONS OF FIRE RATED ASSEMBLIES SEE **2 / A870.2** , **5 / A870.2** **7 / A870.2** , **10 / A870.2** , **12 / A870.2** , **13 / A871.2**

TETER, INC.
FRESNO HEADQUARTERS
VISALIA | BAKERSFIELD | MODESTO | SAN LUIS OBISPO
ARCHITECTS ENGINEERS CONNECTED

VISALIA CAMPUS UNIVERSITY CENTER
COLLEGE OF THE SEQUOIAS - INCREMENT 2
915 S. MOONEY BLVD
VISALIA, CALIFORNIA

DRAWING TITLE
REFLECTED CEILING PLAN - SECOND FLOOR

PROJECT NO.
22-12498

DRAWING
A620.2

PLOT DATE: 11/10/2025 8:59:49 AM

\\tet-file1\Users\tara.chong_TETR\Documents\12498-A-UC_tara.chong.rvt

ABBREVIATIONS

AL	ALUMINUM	SC	SOLID CORE (WOOD/SOUND/FIRE CORE)
CW	CURTAIN WALL, ALUMINUM	SF	STOREFRONT, ALUMINUM
FF	FACTORY FINISH	SS	STAINLESS STEEL
GS	GALVANIZED STEEL	TG	TEMPERED GLASS
HM	HOLLOW METAL	TGO	TEMPERED GLASS, OBSCURE
IC	INSULATED CORE	TIG	TEMPERED INSULATED GLASS
KD	KNOCK-DOWN (ALUMINUM FRAME)	WD	WOOD
P	PAINT		
PL	PLASTIC LAMINATE FACED (SOLID CORE WOOD)		

GENERAL NOTES

DOORS AND GATES SHALL COMPLY WITH CBC SECTIONS 1010 AND 11B-404, INCLUDING BUT NOT LIMITED TO THE FOLLOWING:

1. SIZE: DOOR OPENINGS SHALL HAVE A MINIMUM OPENING CLEAR WIDTH OF 32" MEASURED BETWEEN THE FACE OF THE DOOR AND THE STOP, WITH THE DOOR OPEN 90 DEGREES. EGRESS DOORS USED FOR THE MOVEMENT OF BEDS AND STRETCHER PATIENTS SHALL PROVIDE A MINIMUM CLEAR OPENING WIDTH OF 44". THE CLEAR OPENING HEIGHT OF DOORS SHALL BE NOT LESS THAN 80". THE MAXIMUM DOOR LEAF WIDTH SHALL BE 48" (CBC 1010.1.1 AND 11B-404.2.3).
2. FORCE TO UNLATCH HARDWARE: THE FORCE REQUIRED TO ACTIVATE OPERABLE PARTS SHALL BE 5 LBS MAXIMUM (CBC 1010.1.3, 11B-404.2.7 AND 11B-309.4).
3. FORCE TO OPEN DOORS: THE FORCE REQUIRED TO PUSH OR PULL OPEN NON-FIRE RATED SWINGING, SLIDING, OR FOLDING DOORS SHALL NOT EXCEED 5 LBS; THE FORCE REQUIRED TO PUSH OR PULL OPEN A FIRE RATED SWINGING DOOR SHALL NOT EXCEED 15 LBS (CBC 1010.1.3 AND 11B-404.2.9).
4. THRESHOLDS: THRESHOLDS SHALL NOT EXCEED 1/2 INCH IN HEIGHT ABOVE THE LOWEST ADJACENT FINISHED FLOOR OR LANDING SURFACE; CHANGES IN ELEVATION GREATER THAN 1/4" SHALL BE BEVELED WITH A SLOPE NOT GREATER THAN 2:1 HORIZONTAL TO VERTICAL (CBC 1010.1.6, 11B-404.2.5 AND 11B-303).
5. DOOR OPERATION: EGRESS DOORS SHALL BE READILY OPENABLE FROM THE EGRESS SIDE WITHOUT THE USE OF A KEY OR SPECIAL KNOWLEDGE OR EFFORT (CBC 1010.2).
6. UNLATCHING: THE UNLATCHING OF ANY DOOR OR LEAF FOR EGRESS SHALL NOT REQUIRE MORE THAN ONE MOTION IN A SINGLE LINEAR OR ROTATIONAL DIRECTION TO RELEASE ALL LATCHING AND ALL LOCKING DEVICES (CBC 1010.2.1).
7. HARDWARE: HAND ACTIVATED DOOR OPERATING HARDWARE SHALL BE LEVER HANDLES OR PULLS THAT ARE EASY TO GRASP WITH ONE HAND AND DO NOT REQUIRE TIGHT GRASPING, PINCHING, OR TWISTING OF THE WRIST TO OPERATE. LEVERS, PULLS, LATCHES, LOCKS AND OTHER OPERATING DEVICES ON REQUIRED MEANS OF EGRESS DOORS SHALL COMPLY WITH SFM STANDARD 12-10-2, SECTION 12-10-202 CONTAINED IN THE CCR, TITLE 24, PART 12, CALIFORNIA REFERENCED STANDARDS CODE (CBC 1010.2.2 AND 11B-404.2.7).
8. HARDWARE HEIGHT: OPERATING HARDWARE SHALL BE MOUNTED 34 INCHES MINIMUM AND 44 INCHES MAXIMUM ABOVE THE FINISHED FLOOR LEVEL. LOCKS USED ONLY FOR SECURITY PURPOSES AND NOT USED FOR NORMAL OPERATION ARE PERMITTED AT ANY HEIGHT. (CBC 1010.2.3 & 11B-404.2.7).
9. BOLT LOCKS: MANUALLY OPERATED SURFACE OR FLUSH BOLTS ARE NOT PERMITTED EXCEPT FOR THE INACTIVE LEAF OF PAIRS OF DOORS SERVING STORAGE OR EQUIPMENT ROOMS, OR SERVING B, F OR S OCCUPANCIES HAVING AN OCCUPANT LOAD OF LESS THAN 50 OCCUPANTS (CBC 1010.2.5).
10. PANIC HARDWARE: SWINGING DOORS SERVING A GROUP 'H' OCCUPANCY OR SERVING ROOMS OR SPACES WITH AN OCCUPANT LOAD OF 50 OR MORE IN A GROUP 'A' OR 'E' OCCUPANCY SHALL BE PROVIDED WITH PANIC OR FIRE EXIT HARDWARE (CBC 1010.2.9).
11. ELECTRICAL EQUIPMENT ROOMS: EXIT OR EXIT ACCESS DOORS SERVING TRANSFORMER VAULTS, ROOMS DESIGNATED FOR BATTERIES OR ENERGY STORAGE SYSTEMS, OR MODULAR DATA CENTERS SHALL BE EQUIPPED WITH PANIC HARDWARE. ROOMS CONTAINING ELECTRICAL EQUIPMENT RATED AT 800 AMPERES OR MORE THAT CONTAIN OVERCURRENT DEVICES, SWITCHING DEVICES OR CONTROL DEVICES AND WHERE THE EXIT OR EXIT ACCESS DOOR IS LESS THAN 25' FROM THE EQUIPMENT WORKING SPACE AS REQUIRED BY NFPA 70, SUCH DOORS SHALL BE PROVIDED WITH PANIC HARDWARE AND THE DOORS SHALL SWING IN THE DIRECTION OF EGRESS TRAVEL (CBC 1010.2.9.2).
12. DOOR CLOSERS: IF A DOOR HAS A CLOSER, THE CLOSER SHALL BE ADJUSTED SO THAT FROM AN OPEN POSITION OF 90 DEGREES, THE TIME REQUIRED TO MOVE THE DOOR TO A POSITION OF 12 DEGREES FROM THE LATCH IS 5 SECONDS MINIMUM (CBC 11B-404.2.8.1). CLOSERS SHALL BE ADJUSTED SO THAT THE FORCE REQUIRED TO PUSH OR PULL OPEN A DOOR SHALL NOT EXCEED 5 LBS. FOR INTERIOR AND EXTERIOR DOORS AND NOT MORE THAN 15 LBS. FOR REQUIRED FIRE RATED DOORS. (CBC 11B-404.2.9).
13. DOOR SURFACE: SWINGING DOOR SURFACES WITHIN 10" OF THE FLOOR SHALL HAVE A SMOOTH SURFACE ON THE PUSH SIDE EXTENDING THE FULL WIDTH OF THE DOOR. JOINTS IN THE DOOR SURFACE SHALL NOT EXCEED 1/16" OFFSET. SURFACES SHALL BE FREE OF SHARP OR ABRASIVE EDGES. CAVITIES CREATED BY KICK PLATES SHALL BE CAPPED (CBC 11B-404.2.10).
14. VISION LIGHTS: VISION LITES IN DOORS SHALL HAVE THE BOTTOM EDGE OF VISIBLE GLASS 43" MAXIMUM ABOVE THE FLOOR (CBC 11B-404.2.11).
15. SAFETY GLAZING: GLAZING IN DOORS SHALL BE TEMPERED SAFETY GLASS OR OTHER APPROVED SAFETY GLAZING MATERIAL. SAFETY GLAZING SHALL BE PERMANENTLY IDENTIFIED (CBC 2406.1, 2406.3 AND 2406.4.1).
16. FIRE RATED ASSEMBLIES: FIRE RATED DOOR/FRAME ASSEMBLIES SHALL BE SELF CLOSING AND POSITIVE LATCHING (CBC 716.2.6.1, 716.2.6.2 AND 716.2.6.4). FIRE RATED DOOR/FRAME ASSEMBLIES SHALL BE LABELED BY AN APPROVED AGENCY AND HAVE LABELS COMPLYING WITH NFPA 80 PERMANENTLY AFFIXED TO THE DOOR AND FRAME (CBC 716.2.9.1). ALL FIRE RATED DOORS SHALL HAVE DOOR CLOSERS AND SMOKE SEALS AT JAMB AND HEAD.
17. ALL DOORS SHALL BE 1-3/4" THICK UNLESS NOTED OTHERWISE.
18. REFER TO INTERIOR FINISH SCHEDULE FOR COLOR/GLOSS/ PATTERN FOR PAINTED DOOR AND FRAME FINISHES.
19. INTRUDER LOCKING: LOCKS DESIGNED TO PREVENT INTRUDERS FROM ENTERING SHALL BE CAPABLE OF BEING UNLOCKED FROM THE OUTSIDE WITH A KEY, SHALL BE OPENABLE FROM WITHIN THE ROOM, AND MODIFICATIONS SHALL NOT BE MADE TO FIRE OR PANIC HARDWARE, AND/OR FIRE RATED DOOR ASSEMBLIES (CBC 1010.2.8).

DOOR TYPES

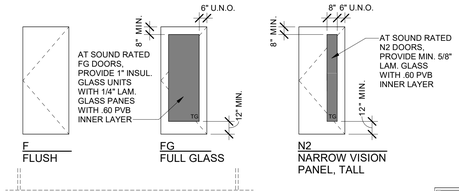

F
FLUSH

FG
FULL GLASS

N2
NARROW VISION PANEL, TALL

ASL
AUTOMATIC SLIDING DOOR PACKAGE WITH BREAKAWAY PANELS
REFER TO WINDOW ELEVATIONS

SL-1
SLIDING DOOR
2 PANEL
RECESSED FLOOR TRACK

DOOR SCHEDULE

MARK	DOOR WIDTH	DOOR HEIGHT	DOOR TYPE	DOOR MATL	DOOR FINISH	FRAME TYPE	FRAME FINISH	ASSEMBLY FIRE RATING (MINUTES)	STC RATING	HARDWARE GROUP	GLAZING TYPE	DETAILS HEAD	DETAILS JAMB	DETAILS THRESHOLD	REMARKS
100A	14' - 0"	7' - 8"	ASL	AL	FF	AL, CW-A	FF	-	-	22.0	TG	4 / A814.2	2 / A814.2	5 / A814.2	C, D, H
100B	7' - 0"	8' - 0"	FG	AL	FF	CW-B	FF	-	-	1.0	TG	12 / A814.2	13 / A814.2	14 / A814.2	E, H, L
100C	6' - 0"	8' - 0"	FG	AL	FF	SF-W	FF	-	35	6.0	TG	21 / A818.2	28 / A818.2	23 / A863.2	E, L, H
101A	6' - 0"	8' - 0"	F	PL	FF	KD-2	FF	-	49-53	9.0	-	11 / A818.2	12 / A818.2	2 / A819.2	I, L
101B	6' - 0"	8' - 0"	F	PL	FF	KD-2	FF	-	49-53	9.0	-	11 / A818.2	12 / A818.2	2 / A819.2	I, L
101C	3' - 6"	7' - 0"	F	PL	FF	KD-1	FF	-	49-53	10.0	-	11 / A818.2	12 / A818.2	2 / A819.2	I, L
101D	3' - 6"	7' - 0"	F	PL	FF	KD-1	FF	-	40	14.0	-	11 / A818.2	12 / A818.2	23 / A863.2	
101E	3' - 6"	8' - 0"	F	PL	FF	KD-1	FF	-	40	14.1	-	11 / A818.2	12 / A818.2	23 / A863.2	E
101F	3' - 6"	8' - 0"	F	HM	P	HM-1C	P	-	49-53	4.0	-	11 / A817.2	3 / A817.2	4 / A817.2	I, E, L
101G	6' - 0"	8' - 0"	FG	AL	FF	CW-N	FF	-	-	1.0	TG	12 / A814.2	13 / A814.2	14 / A814.2	H, L, E
102A	4' - 0"	7' - 0"	F	PL	FF	KD-1	FF		40	15.0	-	11 / A818.2	12 / A818.2	23 / A863.2	M
102B	4' - 0"	7' - 0"	F	HM	P	HM-1A	P		49-53	15.2	-	6 / A818.2	7 / A818.2	-	I, M
103A	3' - 0"	7' - 0"	FG	AL	FF	SF-Z	FF	-	35	12.0	TG	21 / A818.2	22 / A818.2	-	E, H
103B	3' - 0"	7' - 0"	N2	PL	FF	SF-AM	FF	-	35	18.0	TG	21 / A818.2	9 / A819.2	-	H
103C	3' - 0"	7' - 0"	N2	PL	FF	SF-AM (O.H)	FF	-	35	18.0	TG	21 / A818.2	9 / A819.2	-	H
103D	3' - 0"	7' - 0"	FG	PL	FF	SF-1A	FF	-	35	18.0	TG	26 / A818.2	22 / A818.2	-	
103E	3' - 0"	7' - 0"	F	PL	FF	KD-1	FF	-	45	19.0	TG	11 / A818.2	12 / A818.2	-	
103F	3' - 0"	7' - 0"	N2	PL	FF	SF-AM	FF	-	35	18.0	TG	21 / A818.2	9 / A819.2	-	H
103G	3' - 0"	7' - 0"	FG	AL	FF	SF-Z	FF	-	35	12.0	TG	21 / A818.2	22 / A818.2	-	E, H
104A	3' - 0"	7' - 0"	FG	AL	FF	SF-Z	FF	-	35	12.0	TG	21 / A818.2	22 / A818.2	-	E, H
104B	3' - 0"	7' - 0"	N2	PL	FF	SF-AM (O.H)	FF	-	35	18.0	TG	21 / A818.2	9 / A819.2	-	H
104C	3' - 0"	7' - 0"	N2	PL	FF	SF-AM	FF	-	35	18.0	TG	21 / A818.2	9 / A819.2	-	H
104D	3' - 0"	7' - 0"	FG	PL	FF	SF-1A	FF	-	35	18.0	TG	26 / A818.2	22 / A818.2	-	
104E	3' - 0"	7' - 0"	N2	PL	FF	SF-AM (O.H)	FF	-	35	18.0	TG	21 / A818.2	22 / A818.2	-	H
104F	3' - 0"	7' - 0"	FG	AL	FF	SF-Z	FF	-	35	12.0	TG	21 / A818.2	22 / A818.2	-	E, H
105A	3' - 0"	8' - 0"	FG	AL	FF	CW-E	FF	-	-	3.0	TG	12 / A814.2	15 / A812.2 , 13 / A814.2	14 / A814.2	K, E, L, H
106A	3' - 0"	7' - 0"	F	PL	FF	KD-1	FF	60	40	16.0	-	11 / A818.2	12 / A818.2	23 / A863.2	J, M
107A	3' - 0"	7' - 0"	F	PL	FF	KD-1	FF	-	40	20.0	-	10 / A819.2	11 / A819.2	23 / A863.2	
108A	3' - 6"	7' - 0"	F	PL	FF	KD-1	FF	-	40	15.0	-	11 / A818.2	12 / A818.2	23 / A863.2	
109A	3' - 0"	7' - 0"	F	PL	FF	KD-1	FF	-	40	21.0	-	10 / A819.2	11 / A819.2	23 / A863.2	
110A	3' - 0"	7' - 0"	F	PL	FF	KD-1	FF	-	40	21.0	-	10 / A819.2	11 / A819.2	23 / A863.2	
111A	3' - 0"	7' - 0"	N2	PL	FF	SF-X	FF	-	40	8.0	TG	21 / A818.2	19 / A818.2 , 22 / A818.2	-	E, L, H
111B	3' - 0"	7' - 0"	N2	PL	FF	SF-X	FF	-	40	8.0	TG	21 / A818.2	19 / A818.2 , 23 / A818.2	-	E, L, H
112A	3' - 0"	7' - 0"	N2	PL	FF	SF-X	FF	-	40	8.0	TG	21 / A818.2	20 / A818.2 , 23 / A818.2	-	E, L, H
112B	3' - 0"	7' - 0"	N2	PL	FF	SF-X	FF	-	40	8.0	TG	21 / A818.2	20 / A818.2 , 23 / A818.2	-	E, L, H
115A	3' - 0"	7' - 0"	N2	PL	FF	SF-X (O.H)	FF	-	40	8.0	TG	21 / A818.2	20 / A818.2 , 23 / A818.2	-	E, L, H
115B	3' - 0"	7' - 0"	N2	PL	FF	SF-X (O.H)	FF	-	40	8.0	TG	21 / A818.2	20 / A818.2 , 23 / A818.2	-	E, L, H
116A	3' - 0"	7' - 0"	N2	PL	FF	SF-X (O.H)	FF	-	40	8.0	TG	21 / A818.2	19 / A818.2 , 22 / A818.2	-	E, L, H
116B	3' - 0"	7' - 0"	N2	PL	FF	SF-X (O.H)	FF	-	40	8.0	TG	21 / A818.2	19 / A818.2 , 22 / A818.2	-	E, L, H
117A	3' - 0"	7' - 0"	N2	PL	FF	SF-X (O.H)	FF	-	40	8.0	TG	21 / A818.2	20 / A818.2 , 22 / A818.2	-	E, L, H
117B	3' - 0"	7' - 0"	N2	PL	FF	SF-X (O.H)	FF	-	40	8.0	TG	21 / A818.2	20 / A818.2 , 22 / A818.2	-	E, L, H
118A	3' - 0"	7' - 0"	FG	AL	FF	SF-Z (O.H)	FF	-	35	12.0	TG	21 / A818.2	22 / A818.2 , 28 / A818.2	-	E, H
118B	3' - 0"	7' - 0"	N2	PL	FF	SF-AM (O.H)	FF	-	35	18.0	TG	21 / A818.2	9 / A819.2	-	H
118C	3' - 0"	7' - 0"	N2	PL	FF	SF-AM	FF	-	35	18.0	TG	21 / A818.2	9 / A819.2	-	H
118D	3' - 0"	7' - 0"	FG	PL	FF	SF-1A	FF	-	35	18.0	TG	26 / A818.2	22 / A818.2	-	
118E	3' - 0"	7' - 0"	N2	PL	FF	SF-AM (O.H)	FF	-	35	18.0	TG	21 / A818.2	9 / A819.2 , 28 / A818.2	-	H
118F	3' - 0"	7' - 0"	FG	AL	FF	SF-Z	FF	-	35	12.0	TG	21 / A818.2	22 / A818.2 , 28 / A818.2	-	E, H
119A	3' - 6"	7' - 0"	F	PL	FF	KD-1	FF	-	40	11.0	-	11 / A818.2	12 / A818.2	23 / A863.2	E
120A	6' - 6"	8' - 0"	SL-1	AL	FF	SF-AK	FF	-	35	7.0	TG	13 / A818.2	14 / A818.2 , 15 / A818.2	10 / A818.2	G
120B	3' - 0"	7' - 0"	N2	PL	FF	KD-1	FF	-	35	19.0	TG	12 / A819.2	13 / A819.2	-	
120C	3' - 0"	7' - 0"	F	PL	FF	KD-1	FF	-	35	19.0	-	11 / A818.2	12 / A818.2	23 / A863.2	E
121A	3' - 0"	7' - 0"	F	PL	FF	KD-1	FF	-	40	20.0	-	10 / A819.2	11 / A819.2	23 / A863.2	
122A	3' - 0"	7' - 0"	N2	PL	FF	KD-1	FF	-	40	21.0	TGO	10 / A819.2	11 / A819.2	23 / A863.2	A, B, F
123A	3' - 0"	7' - 0"	N2	PL	FF	KD-1	FF	-	40	21.0	TGO	10 / A819.2	11 / A819.2	23 / A863.2	A, B, F
124A	3' - 0"	7' - 0"	F	PL	FF	KD-1	FF	60	40	16.0	-	11 / A818.2	12 / A818.2	23 / A863.2	J, M
126A	6' - 0"	7' - 0"	F	PL	FF	KD-2	FF	-	40	13.0	-	12 / A819.2	13 / A819.2	23 / A863.2	
129A	6' - 0"	8' - 0"	FG	AL	FF	CW-H	FF	-	-	1.0	TG	12 / A814.2	5 / A812.2 - 13 / A814.2	14 / A814.2	H, K, E, L
130A	3' - 6"	8' - 0"	F	PL	FF	HM-1D	P	-	45	12.0	-	16 / A819.2	18 / A819.2	2 / A819.2	E
130B	4' - 0"	8' - 0"	F	HM	P	HM-1A	P	-	45	17.0	-	6 / A818.2	7 / A818.2	-	I, E
130C	6' - 0"	8' - 0"	F	HM	P	HM-2C	P	-	45	5.0	-	1 / A817.2	3 / A817.2 , 2 / A817.2	4 / A817.2	E
131A	4' - 0"	8' - 0"	F	HM	P	HM-1A	P	-	45	4.0	-	1 / A817.2	16 / A817.2	4 / A817.2	E, L
201A	3' - 0"	7' - 0"	N2	PL	FF	SF-X	FF	-	35	11.0	TG	21 / A818.2	22 / A818.2	23 / A863.2	E
201B	3' - 0"	7' - 0"	F	PL	FF	KD-1	FF	-	40	20.0	-	10 / A819.2	11 / A819.2	23 / A863.2	
201C	7' - 0"	8' - 0"	SL-1	AL	FF	SF-AG	FF	-	35	7.0	TG	13 / A818.2	8 / A818.2 , 9 / A818.2	10 / A818.2	G
201D	3' - 0"	7' - 0"	N2	PL	FF	SF-AF	FF	-	35	12.0	TG	21 / A818.2	22 / A818.2 , 28 / A818.2	23 / A863.2	E, H
202A	3' - 0"	7' - 0"	N2	PL	FF	SF-X	FF	-	40	12.0	TG	21 / A818.2	19 / A818.2 , 22 / A818.2	-	E, H
202B	3' - 0"	7' - 0"	N2	PL	FF	SF-X	FF	-	40	12.0	TG	21 / A818.2	19 / A818.2 , 22 / A818.2		E, H
204A	3' - 0"	7' - 0"	F	PL	FF	KD-1	FF	-	40	20.0	-	10 / A819.2	11 / A819.2	23 / A863.2	
205A	3' - 0"	7' - 0"	F	PL	FF	KD-1	FF	-	40	20.0	-	10 / A819.2	11 / A819.2	23 / A863.2	
206A	3' - 6"	7' - 0"	F	PL	FF	KD-1	FF	-	40	15.0	-	11 / A818.2	12 / A818.2	23 / A863.2	
207A	3' - 0"	7' - 0"	F	PL	FF	KD-1	FF	-	40	21.0	-	10 / A819.2	11 / A819.2	23 / A863.2	
208A	3' - 0"	7' - 0"	F	PL	FF	KD-1	FF	-	40	21.0	-	10 / A819.2	11 / A819.2	23 / A863.2	
211A	3' - 0"	7' - 0"	N2	PL	FF	SF-X	FF	-	40	8.0	TG	21 / A818.2	19 / A818.2 , 22 / A818.2	-	E, L, H
211B	3' - 0"	7' - 0"	N2	PL	FF	SF-X	FF	-	40	8.0	TG	21 / A818.2	19 / A818.2 , 23 / A818.2	-	E, L, H
212A	3' - 0"	7' - 0"	N2	PL	FF	SF-X	FF	-	40	8.0	TG	21 / A818.2	20 / A818.2 , 23 / A818.2	-	E, L, H
212B	3' - 0"	7' - 0"	N2	PL	FF	SF-X	FF	-	40	8.0	TG	21 / A818.2	20 / A818.2 , 23 / A818.2	-	E, L, H
215A	3' - 0"	7' - 0"	N2	PL	FF	SF-X (O.H)	FF	-	40	12.0	TG	21 / A818.2	20 / A818.2 , 22 / A818.2	-	E, H
215B	3' - 0"	7' - 0"	N2	PL	FF	SF-X (O.H)	FF	-	40	12.0	TG	21 / A818.2	20 / A818.2 , 22 / A818.2	-	E, H
216A	3' - 0"	7' - 0"	N2	PL	FF	SF-X (O.H)	FF	-	40	8.0	TG	21 / A818.2	19 / A818.2 , 22 / A818.2	-	E, L, H
216B	3' - 0"	7' - 0"	N2	PL	FF	SF-X (O.H)	FF	-	40	8.0	TG	21 / A818.2	19 / A818.2 , 22 / A818.2	-	E, L, H
217A	3' - 0"	7' - 0"	N2	PL	FF	SF-X (O.H)	FF	-	40	8.0	TG	21 / A818.2	20 / A818.2 , 22 / A818.2	-	E, L, H
217B	3' - 0"	7' - 0"	N2	PL	FF	SF-X (O.H)	FF	-	40	8.0	TG	21 / A818.2	20 / A818.2 , 22 / A818.2	-	E, L, H
218A	3' - 0"	7' - 0"	N2	PL	FF	SF-X (O.H)	FF	-	40	12.0	TG	21 / A818.2	19 / A818.2 , 22 / A818.2	-	E, H
218B	3' - 0"	7' - 0"	N2	PL	FF	SF-X (O.H)	FF	-	40	12.0	TG	21 / A818.2	19 / A818.2 , 22 / A818.2	-	E, H
219A	3' - 6"	7' - 0"	F	PL	FF	KD-1	FF	-	40	15.1	-	11 / A818.2	12 / A818.2	23 / A863.2	E, L
219B	3' - 6"	7' - 0"	F	PL	FF	KD-1	FF	-	40	15.1	-	11 / A818.2	12 / A818.2	-	E, L
219C	3' - 0"	7' - 0"	F	PL	FF	KD-1	FF	-	40	11.0	-	11 / A818.2	12 / A818.2	-	E
220A	3' - 0"	7' - 0"	N2	PL	FF	SF-AL	FF	-	35	23.0	TG	26 / A818.2	28 / A818.2 , 27 / A869.2	23 / A863.2	H
220B	3' - 0"	7' - 0"	N2	PL	FF	SF-AL (O.H)	FF	-	35	23.0	TG	27 / A818.2	6 / A819.2 , 28 / A818.2	-	H
221A	6' - 6"	8' - 0"	SL-1	AL	FF	SF-AH	FF	-	35	7.0	TG	13 / A818.2	14 / A818.2 , 17 / A818.2	10 / A818.2	G
222A	6' - 6"	8' - 0"	SL-1	AL	FF	SF-AK	FF	-	35	7.0	TG	13 / A818.2	14 / A818.2 , 15 / A818.2	10 / A818.2	G
223A	3' - 0"	7' - 0"	F	PL	FF	KD-1	FF	-	40	20.0	-	10 / A819.2	11 / A819.2	23 / A863.2	
224A	3' - 0"	7' - 0"	N2	PL	FF	KD-1	FF	-	40	21.0	TGO	10 / A819.2	11 / A819.2	23 / A863.2	A, B, F
225A	3' - 0"	7' - 0"	N2	PL	FF	KD-1	FF	-	40	21.0	TGO	10 / A819.2	11 / A819.2	23 / A863.2	A, B, F
226A	3' - 0"	7' - 0"	F	PL	FF	KD-1	FF	-	40	20.0	-	11 / A818.2	12 / A818.2		
227A	3' - 0"	7' - 0"	F	PL	FF	KD-1	FF	-	40	15.0	-	11 / A818.2	12 / A818.2	23 / A863.2	
229A	3' - 0"	8' - 0"	FG	AL	FF	CW-V	FF	-	-	2.0	TG	12 / A814.2	13 / A814.2	17 / A822.2	H, E
230A	3' - 6"	7' - 0"	N2	PL	FF	SF-AC	FF	-	40	8.1	TG	21 / A818.2	22 / A818.2	-	E
230B	3' - 6"	7' - 0"	N2	PL	FF	SF-AC (O.H.)	FF	-	40	11.0	TG	21 / A818.2	22 / A818.2	-	E
230C	3' - 6"	7' - 0"	N2	PL	FF	SF-1A	FF	-	40	12.0	TG	26 / A818.2	22 / A818.2	23 / A863.2	E
231A	3' - 6"	7' - 0"	N2	PL	FF	SF-AC	FF	-	40	8.1	TG	21 / A818.2	22 / A818.2	-	E
231B	3' - 6"	8' - 0"	F	PER MFR.	FF	PER MFR.	PER MFR.	-	-	22.0	-	-	-	-	
232A	3' - 6"	7' - 0"	N2	PL	FF	SF-AC	FF	-	40	8.1	TG	21 / A818.2	19 / A818.2 , 22 / A818.2	-	E
232B	3' - 6"	7' - 0"	N2	PL	FF	SF-AC	FF	-	40	12.0	TG	21 / A818.2	20 / A818.2 , 22 / A818.2	-	E

DOOR FRAME TYPES

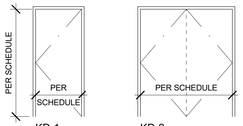

KD-1
KNOCK DOWN INTERIOR ALUMINUM SINGLE DOOR SINGLE SWING

KD-2
KNOCK DOWN INTERIOR ALUMINUM DOUBLE DOOR SINGLE SWING

HM-1A
HOLLOW METAL INTERIOR FRAME PROFILE 'A' PROFILE 'D' AT 130A

HM-2C
HOLLOW METAL EXTERIOR FRAME PROFILE 'C'

HM-1C
HOLLOW METAL EXTERIOR FRAME PROFILE 'C'

SF-1A
ALUM. STOREFRONT INTERIOR SINGLE SWING

TYPICAL DOOR JAMB PROFILES

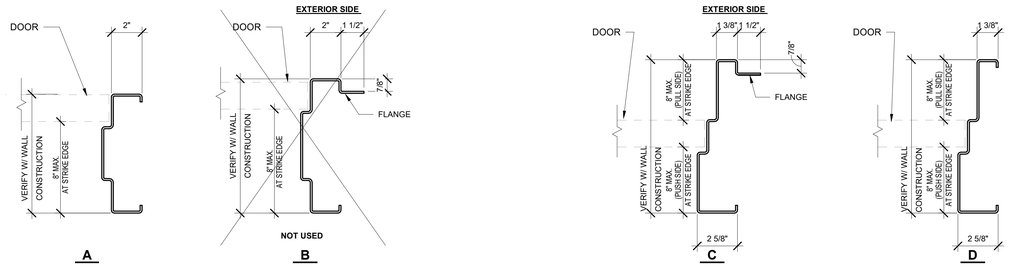

REMARKS

A. NO LATCH, CLOSER ONLY, PUSH/PULL OPERATION

B. SELF CLOSING

C. DOOR IS NOT TO HAVE A THUMB TURN CYLINDER LOCK. CONTRACTOR AND/OR SUB CONTRACTOR TO COORDINATE WITH MANUFACTURER WITH PANIC FUNCTION OPTIONS USING BREAKAWAY DOORS AND SHALL BE REVIEWED FOR ACCEPTANCE THROUGH SHOP DRAWINGS SUBMITTAL.

D. DOOR ASSEMBLY HAS (2) SWING BREAKAWAY DOORS, EGRESS CLEAR WIDTH IS 79 3/4".

E. ACCESS CONTROLLED DOOR PER DOOR HARDWARE SCHEDULE AND SPECIFICATIONS, SEE ELECTRICAL DRAWINGS. COORDINATE ROUTING OF CONDUIT AND WIRING.

F. OBSCURE GLASS, TO BE SELECTED BY ARCHITECT.

G. SLIDING DOORS SHALL HAVE STRAIGHT PULL HANDLES AND SHALL NOT REQUIRE MORE THAN 5 LBS OF FORCE TO OPERATE.

H. DOOR OPENING OCCURS IN CURTAIN WALL OR STOREFRONT FRAMING, REFER TO WINDOW SCHEDULE FOR FRAMING CONFIGURATION. SUFFIX DESIGNATION INDICATES WINDOW TYPE.

I. SOUND RATED DOORS, STC 50 OR GREATER TO HAVE AUTO DOOR BOTTOM, AND THRESHOLD SOUND SEALS. SEE **2 / A819.2** & **3 / A819.2**

J. SELF LOCKING AND CLOSING

K. EXIT DOOR ONLY

L. PANIC HARDWARE REQUIRED

M. ALL FIRE RATED DOORS SHALL HAVE DOOR CLOSERS AND SMOKE SEALS AT JAMB AND HEAD. SEE GENERAL NOTE 16 FOR ADDITIONAL INFORMATION.

IDENTIFICATION STAMP
DIV. OF THE STATE ARCHITECT
APP: 02-122821 INC: 2
REVIEWED FOR
SS ☑ FLS ☑ ACS ☑
DATE: 11/20/2025

© Teter, Inc. expressly reserves its common law copyright and other property rights in these plans. This document, the ideas and designs incorporated herein, as an instrument of professional service, is not to be used in whole or in part, for any other project without prior written authorization.

MARK	DATE	DESCRIPTION
A.	11/13/2025	DSA BACKCHECK

TET

\\tet-file1\Users\tara.chong_TETER\Documents\12498-A-UC_tara.chong.rvt

NOTE: CURTAIN WALL AND STOREFRONT SYSTEMS ARE DEFERRED SUBMITTALS AND PROVIDED FOR REFERENCE ONLY.

LEGEND

DEEP MULLION COVER, 7 1/2" PROJECTION

DEEP MULLION COVER, 7 1/2" PROJECTION

DEEP MULLION COVER, 4" PROJECTION

CURTAIN WALL MULLION

GLASS TYPE ABBREVIATIONS

G	GLASS, CLEAR	TIG	TEMPERED INSULATED GLASS, CLEAR
IG	INSULATED GLASS, CLEAR	TIGO	TEMPERED INSULATED GLASS, ORANGE
SG	INSULATED SPANDREL GLASS		
TG	TEMPERED GLASS, CLEAR		

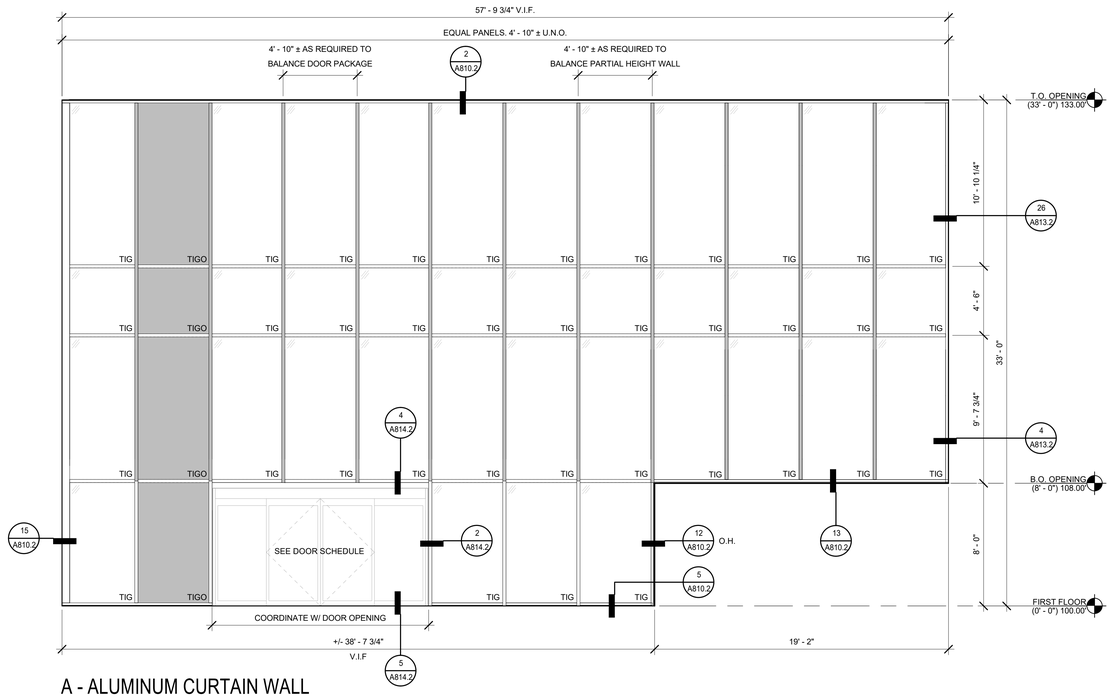

A - ALUMINUM CURTAIN WALL

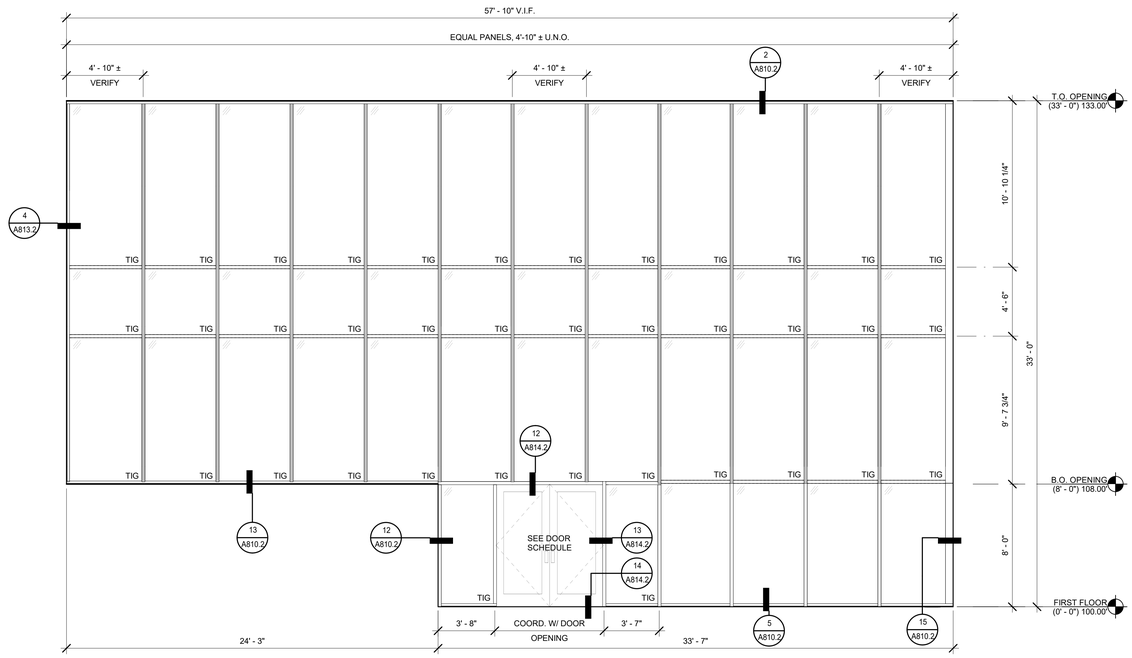

B - ALUMINUM CURTAIN WALL

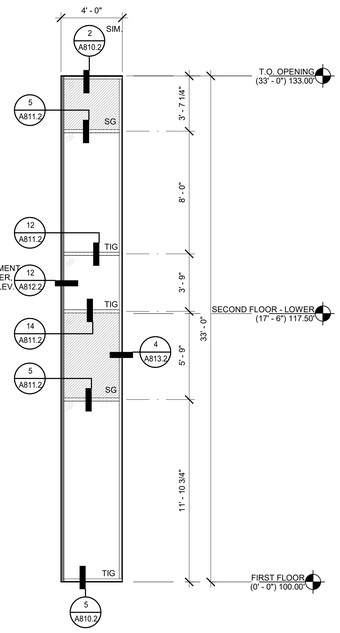

C - ALUMINUM CURTAIN WALL

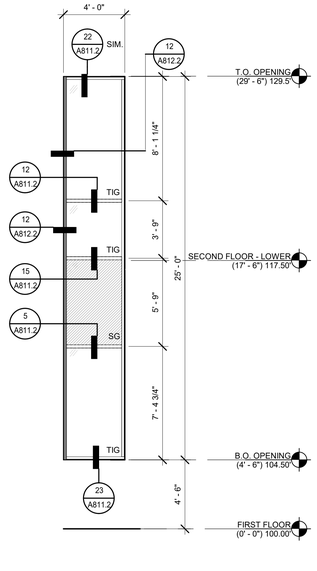

D - ALUMINUM CURTAIN WALL

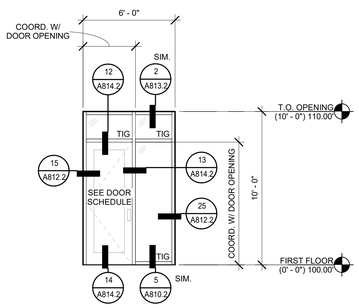

E - ALUMINUM STOREFRONT

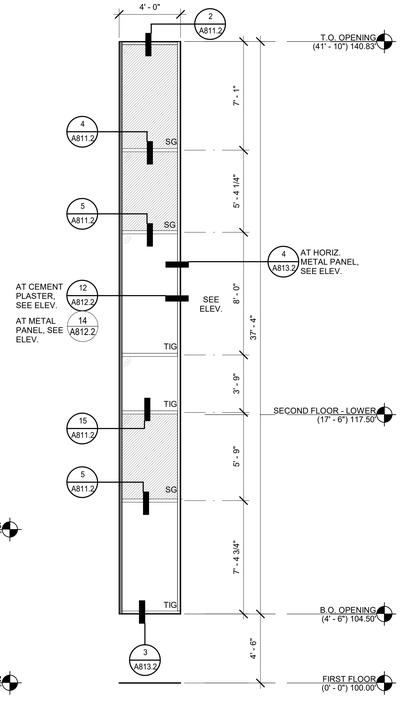

F - ALUMINUM CURTAIN WALL

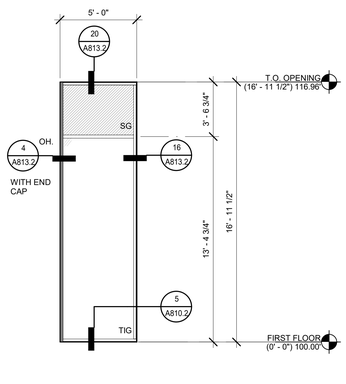

G - ALUMINUM CURTAIN WALL

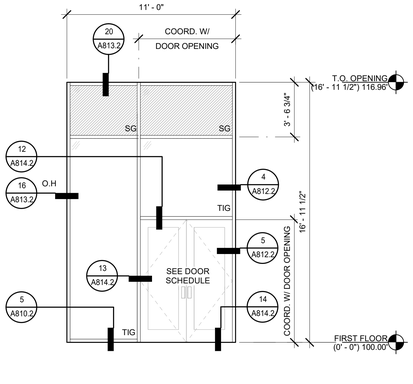

H - ALUMINUM CURTAIN WALL

IDENTIFICATION STAMP
DIV. OF THE STATE ARCHITECT
APP: 02-122821 INC: 2
REVIEWED FOR
SS ☑ FLS ☑ ACS ☑
DATE: 11/20/2025

Teter, Inc. expressly reserves its common law copyright and other property rights in these plans. This document, the ideas and designs incorporated herein, as an instrument of professional service, is not to be used in whole or part, for any other project without prior written authorization.

MARK	DATE	DESCRIPTION
A.	11/13/2025	DSA BACKCHECK

LICENSED ARCHITECT ★ STATE OF CALIFORNIA ★ CONSTRUCTION CONFORMED COPY

TETER, INC.
ARCHITECTS ENGINEERS CONNECTED
FRESNO HEADQUARTERS
VISALIA | BAKERSFIELD | MODESTO | SAN LUIS OBISPO

VISALIA CAMPUS UNIVERSITY CENTER
COLLEGE OF THE SEQUOIAS - INCREMENT 2
915 S. MOONEY BLVD
VISALIA, CALIFORNIA

DRAWING TITLE
WINDOW SCHEDULE

PROJECT NO.
22-12498

DRAWING
A701.2

PLOT DATE: 11/10/2025 9:00:18 AM

\\tet-file1\Users\tara.chong_TETER\Documents\12498-A-UC_tara.chong.rvt

NOTE: CURTAIN WALL AND STOREFRONT SYSTEMS ARE DEFERRED SUBMITTALS AND PROVIDED FOR REFERENCE ONLY.

LEGEND

- DEEP MULLION COVER, 7 1/2" PROJECTION
- DEEP MULLION COVER, 7 1/2" PROJECTION
- DEEP MULLION COVER, 4" PROJECTION
- CURTAIN WALL MULLION

GLASS TYPE ABBREVIATIONS

G	GLASS, CLEAR	TIG	TEMPERED INSULATED GLASS, CLEAR
IG	INSULATED GLASS, CLEAR	TIGO	TEMPERED INSULATED GLASS, ORANGE
SG	INSULATED SPANDREL GLASS		
TG	TEMPERED GLASS, CLEAR		

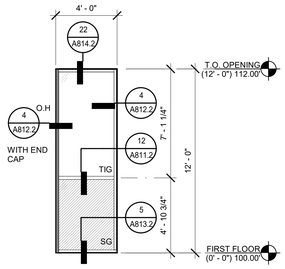

J - ALUMINUM CURTAIN WALL

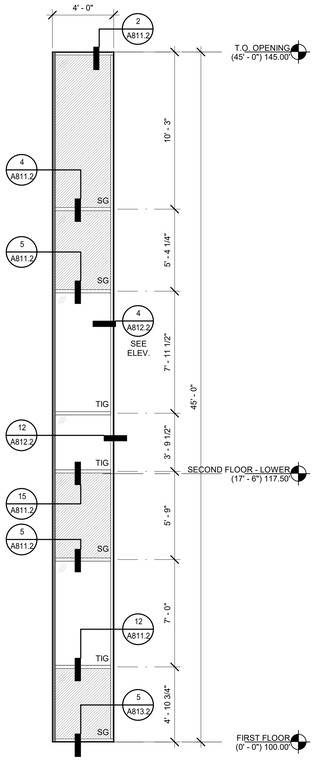

K - ALUMINUM CURTAIN WALL

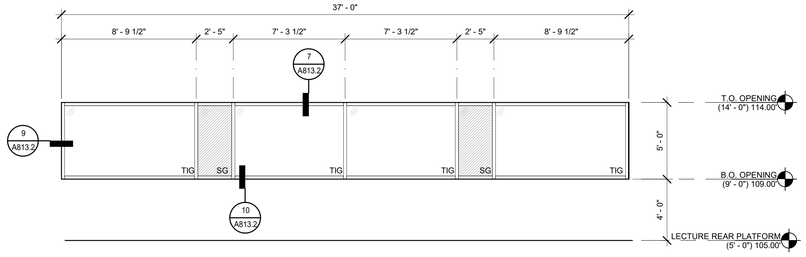

L - ALUMINUM STOREFRONT

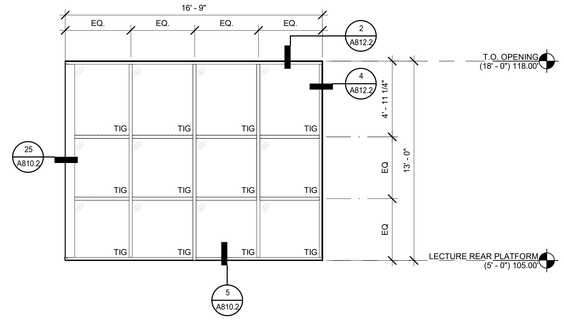

M - ALUMINUM CURTAIN WALL

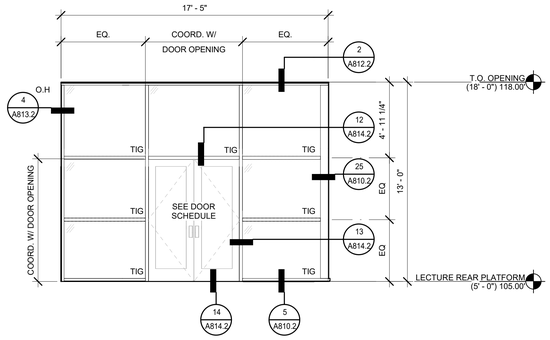

N - ALUMINUM CURTAIN WALL

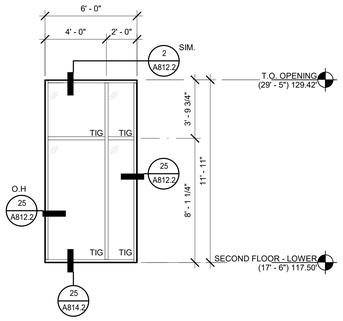

O - ALUMINUM CURTAIN WALL

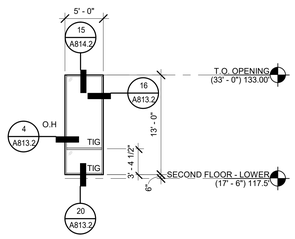

P - ALUMINUM CURTAIN WALL

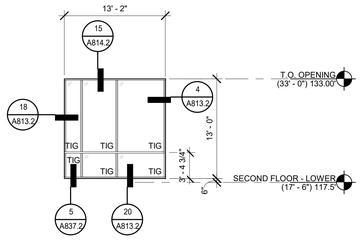

Q - ALUMINUM CURTAIN WALL

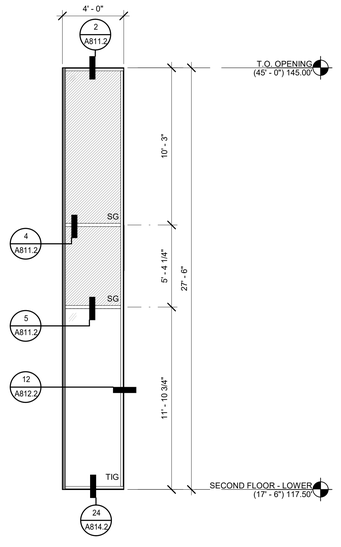

R - ALUMINUM CURTAIN WALL

WINDOW SCHEDULE

1/4" = 1'-0" | 5

PLOT DATE: 11/10/2025 9:00:36 AM

IDENTIFICATION STAMP
DIV. OF THE STATE ARCHITECT
APP: 02-122821 INC: 2
REVIEWED FOR
SS ☑ FLS ☑ ACS ☑
DATE: 11/20/2025

©Teter, Inc. expressly reserves this material from copyright and other property rights in these plans. This document, the ideas and designs incorporated herein, as an instrument of professional service, is not to be used in whole or part, for any other project without prior written authorization.

MARK	DATE	DESCRIPTION
A	11/13/2025	DSA BACKCHECK

TETER, INC.
FRESNO HEADQUARTERS
VISALIA | BAKERSFIELD | MODESTO | SAN LUIS OBISPO
ARCHITECTS ENGINEERS CONNECTED

VISALIA CAMPUS UNIVERSITY CENTER
COLLEGE OF THE SEQUOIAS - INCREMENT 2
915 S. MOONEY BLVD
VISALIA, CALIFORNIA

DRAWING TITLE
WINDOW SCHEDULE

PROJECT NO.
22-12498

DRAWING
A702.2

\\tet-file1\Users\tara.chong_TETR\Documents\12498-A-UC_tara.chong.rvt

NOTE: CURTAIN WALL AND STOREFRONT SYSTEMS ARE DEFERRED SUBMITTALS AND PROVIDED FOR REFERENCE ONLY.

LEGEND

- DEEP MULLION COVER, 7 1/2" PROJECTION
- DEEP MULLION COVER, 7 1/2" PROJECTION
- DEEP MULLION COVER, 4" PROJECTION
- CURTAIN WALL MULLION

GLASS TYPE ABBREVIATIONS

G	GLASS, CLEAR	TIG	TEMPERED INSULATED GLASS, CLEAR
IG	INSULATED GLASS, CLEAR	TIGO	TEMPERED INSULATED GLASS, ORANGE
SG	INSULATED SPANDREL GLASS		
TG	TEMPERED GLASS, CLEAR		

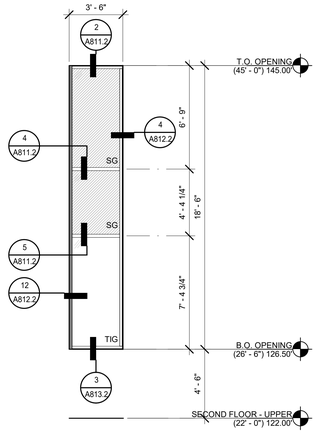

S - ALUMINUM CURTAIN WALL

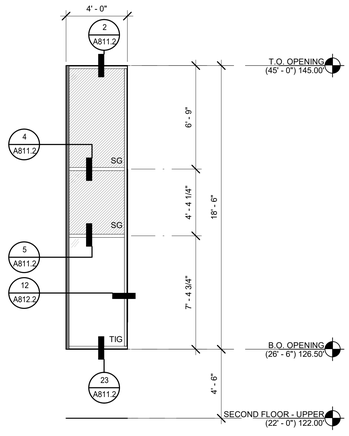

T - ALUMINUM CURTAIN WALL

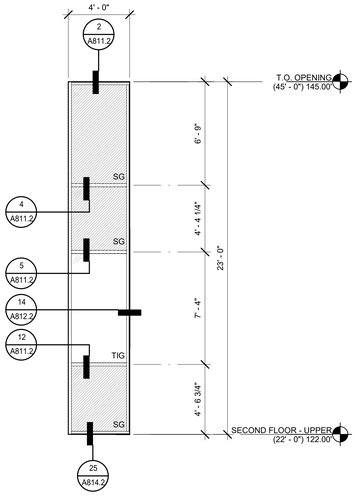

U - ALUMINUM CURTAIN WALL

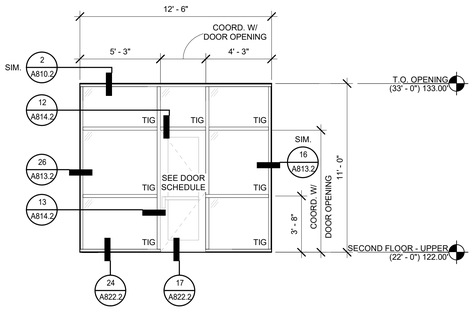

V - ALUMINUM CURTAIN WALL

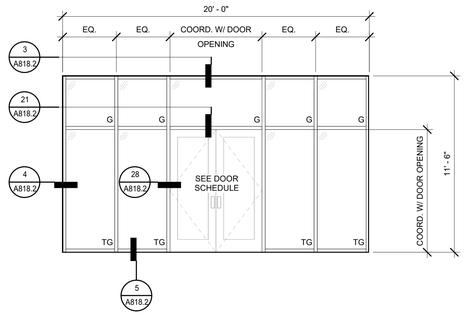

W - ALUMINUM STOREFRONT

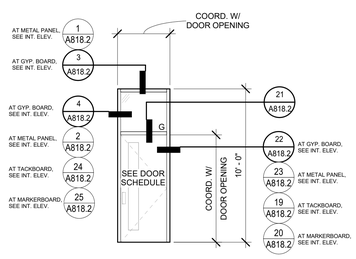

X - ALUMINUM STOREFRONT

RIGHT HAND REVERSE DOOR SHOWN - LEFT HAND REVERSE SIMILAR, OPPOSITE HAND

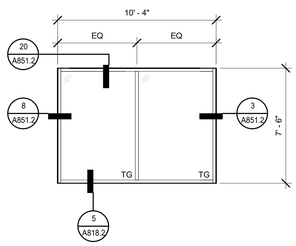

Y - ALUMINUM STOREFRONT

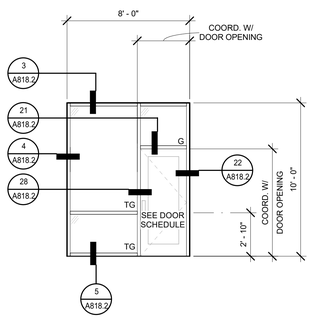

Z - ALUMINUM STOREFRONT

RIGHT HAND REVERSE DOOR SHOWN - LEFT HAND REVERSE SIMILAR,OPPOSITE HAND

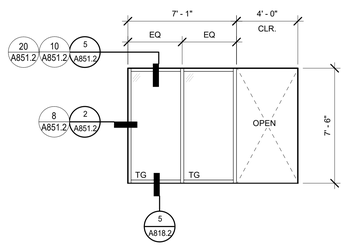

AA - ALUMINUM STOREFRONT

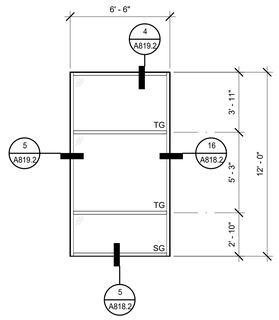

AB - ALUMINUM STOREFRONT

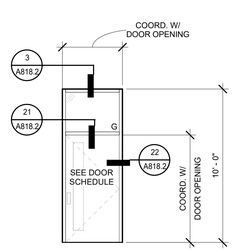

AC -ALUMINUM STOREFRONT

WINDOW SCHEDULE

1/4" = 1' - 0" | 5

PLOT DATE: 11/10/2025 9:00:56 AM

IDENTIFICATION STAMP
DIV. OF THE STATE ARCHITECT
APP: 02-122821 INC: 2
REVIEWED FOR
SS ☑ FLS ☑ ACS ☑
DATE: 11/20/2025

Teter, Inc. expressly reserves its common law copyright and other property rights in these plans. This document, the ideas and designs incorporated herein, as an instrument of professional service, is not to be used in whole or part, for any other project without prior written authorization.

MARK	DATE	DESCRIPTION
A	11/13/2025	DSA BACKCHECK

LICENSED ARCHITECT ★ STATE OF CALIFORNIA ★ SUSAN MARIE CHONG ★ Expires 08-31-2027

TETER, INC.
FRESNO HEADQUARTERS
VISALIA | BAKERSFIELD | MODESTO | SAN LUIS OBISPO
ARCHITECTS ENGINEERS CONNECTED

TETER

VISALIA CAMPUS UNIVERSITY CENTER
COLLEGE OF THE SEQUOIAS - INCREMENT 2
915 S. MOONEY BLVD
VISALIA, CALIFORNIA

DRAWING TITLE
WINDOW SCHEDULE

PROJECT NO.
22-12498

DRAWING
A703.2

\\tet-file1\Users\tara.chong_TETR\Documents\12498-A-UC_tara.chong.rvt

NOTE: CURTAIN WALL AND STOREFRONT SYSTEMS ARE DEFERRED SUBMITTALS AND PROVIDED FOR REFERENCE ONLY.

GLASS TYPE ABBREVIATIONS

G	GLASS, CLEAR	TIG	TEMPERED INSULATED GLASS, CLEAR
IG	INSULATED GLASS, CLEAR	TIGO	TEMPERED INSULATED GLASS, ORANGE
SG	INSULATED SPANDREL GLASS		
TG	TEMPERED GLASS, CLEAR		

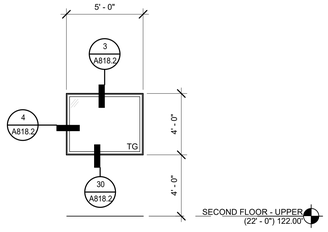

AD- ALUMINUM STOREFRONT

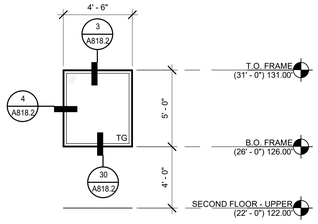

AE - ALUMINUM STOREFRONT

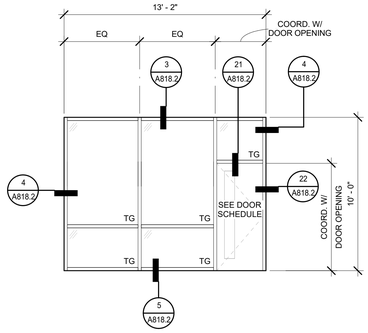

AF - ALUMINUM STOREFRONT

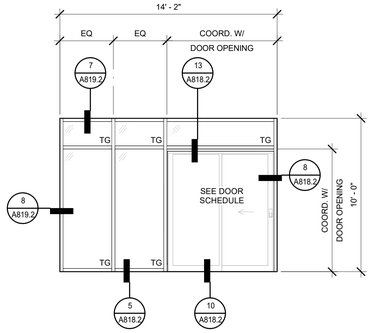

AG - ALUMINUM STOREFRONT

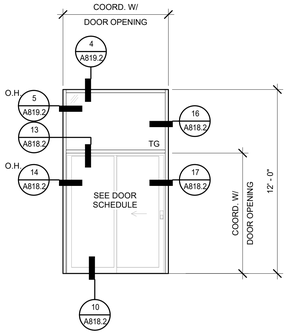

AH - ALUMINUM STOREFRONT

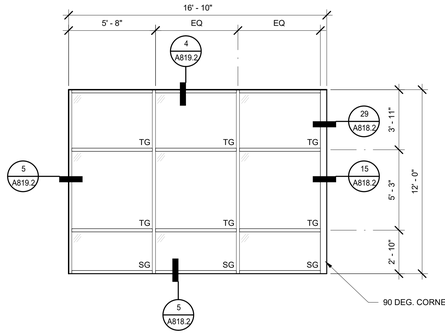

AJ - ALUMINUM STOREFRONT

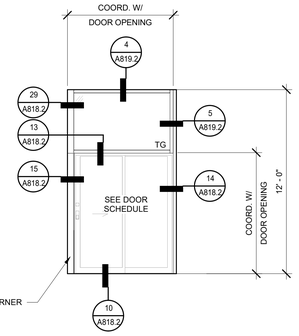

AK - ALUMINUM STOREFRONT

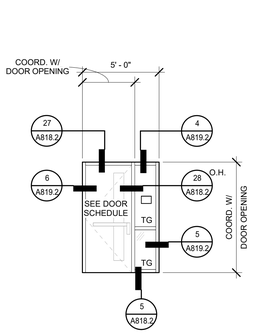

AL - ALUMINUM STOREFRONT

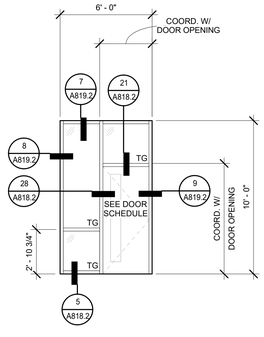

AM - ALUMINUM STOREFRONT

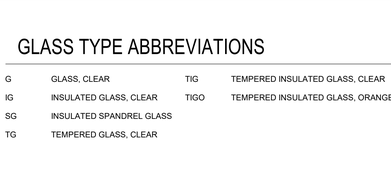

NOTE: OPERATION OF WINDOW IS FOR CLEANING PURPOSES ONLY AND NOT FOR USE BY ROOM OCCUPANTS. PROVIDE LOCK FOR MAINTENANCE ACCESS. ACCESSIBILITY REQUIREMENTS ARE NOT APPLICABLE PER CBC 11B-203.5.

BB - ALUMINUM WINDOW

(INTERIOR)

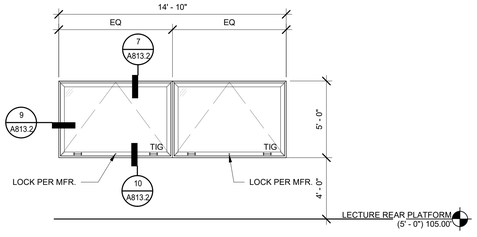

NOTE: OPERATION OF WINDOW IS FOR CLEANING PURPOSES ONLY AND NOT FOR USE BY ROOM OCCUPANTS. PROVIDE LOCK FOR MAINTENANCE ACCESS. ACCESSIBILITY REQUIREMENTS ARE NOT APPLICABLE PER CBC 11B-203.5.

BC - ALUMINUM WINDOW

(INTERIOR)

IDENTIFICATION STAMP
DIV. OF THE STATE ARCHITECT
APP: 02-122821 INC: 2
REVIEWED FOR
SS ☑ FLS ☑ ACS ☑
DATE: 11/20/2025

Teter, Inc. expressly reserves its common law copyright and other property rights in these plans. This document, the ideas and designs incorporated herein, as an instrument of professional service, is not to be used in whole or in part, for any other project without prior written authorization.

MARK	DATE	DESCRIPTION
A	11/13/2025	DSA BACKCHECK

TETER, INC.
FRESNO HEADQUARTERS
VISALIA | BAKERSFIELD | MODESTO | SAN LUIS OBISPO
ARCHITECTS ENGINEERS CONNECTED

VISALIA CAMPUS UNIVERSITY CENTER
COLLEGE OF THE SEQUOIAS - INCREMENT 2
915 S. MOONEY BLVD
VISALIA, CALIFORNIA

DRAWING TITLE
WINDOW SCHEDULE

PROJECT NO.
22-12498

DRAWING
A704.2

PLOT DATE: 11/10/2025 9:01:14 AM

\\tet-file1\Users\tara.chong_TETR\Documents\12498-A-UC_tara.chong.rvt

PLOT DATE: 11/10/2025 9:01:22 AM

IDENTIFICATION STAMP
DIV. OF THE STATE ARCHITECT
APP: 02-122821 INC: 2
REVIEWED FOR
SS ☑ FLS ☑ ACS ☑
DATE: 11/20/2025

Teter, Inc. expressly reserves its common law copyright and other property rights in these plans. This document, the ideas and designs incorporated herein, as an instrument of professional service, is not to be used in whole or in part, for any other project without prior written authorization.

MARK	DATE	DESCRIPTION
A	11/13/2025	DSA BACKCHECK

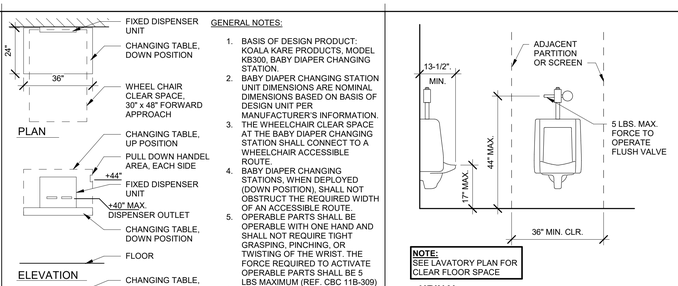

GENERAL NOTES:

1. BASIS OF DESIGN PRODUCT: KOALA KARE PRODUCTS, MODEL KB300, BABY DIAPER CHANGING STATION.
2. BABY DIAPER CHANGING STATION UNIT DIMENSIONS ARE NOMINAL DIMENSIONS BASED ON BASIS OF DESIGN UNIT PER MANUFACTURER'S INFORMATION.
3. THE WHEELCHAIR CLEAR SPACE AT THE BABY DIAPER CHANGING STATION SHALL CONNECT TO A WHEELCHAIR ACCESSIBLE ROUTE.
4. BABY DIAPER CHANGING STATIONS, WHEN DEPLOYED (DOWN POSITION), SHALL NOT OBSTRUCT THE REQUIRED WIDTH OF AN ACCESSIBLE ROUTE.
5. OPERABLE PARTS SHALL BE OPERABLE WITH ONE HAND AND SHALL NOT REQUIRE TIGHT GRASPING, PINCHING, OR TWISTING OF THE WRIST. THE FORCE REQUIRED TO ACTIVATE OPERABLE PARTS SHALL BE 5 LBS MAXIMUM (REF. CBC 11B-309)
6. BABY DIAPER CHANGING STATIONS SHALL NOT BE LOCATED IN TOILET COMPARTMENTS OF MULTIPLE ACCOMMODATION TOILET ROOMS (CBC 11B-226.4)

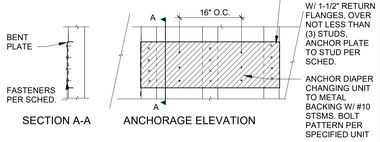

SECTION A-A ANCHORAGE ELEVATION

STUD TYPE	FASTENERS (PER STUD)
METAL	(4) #10 STSMS

NOTES:
1. SCREWS TO HAVE LOW PROFILE HEADS
2. SPACE FASTENERS 1" FROM EDGES AND EQUALLY SPACED IN BETWEEN.

SRH_12_2019

DIAPER CHANGING STATION 3/8" = 1'-0" | 17

NOTE: SEE LAVATORY PLAN FOR CLEAR FLOOR SPACE

URINAL

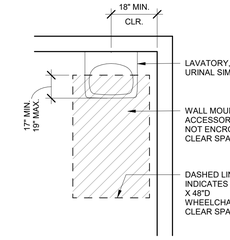

LAVATORY

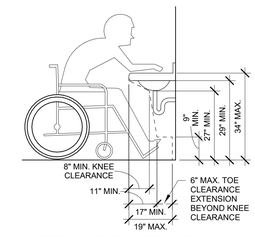

UNDER LAVATORY CLEARANCE

LAVATORY NOTES:
1. WATER SUPPLY AND DRAIN PIPES UNDER LAVATORIES AND SINKS SHALL BE INSULATED OR OTHERWISE CONFIGURED TO PROTECT AGAINST CONTACT. THERE SHALL BE NO SHARP OR ABRASIVE SURFACES UNDER LAVATORIES AND SINKS.
2. FAUCETS SHALL BE OPERABLE WITH ONE HAND AND NOT REQUIRE TIGHT GRASPING PINCHING OR TWISTING.
3. THE FORCE TO OPERATE CONTROLS SHALL NOT EXCEED 5 LBS.
4. SELF-CLOSING VALVES SHALL REMAIN OPEN FOR 10 SECONDS MIN.

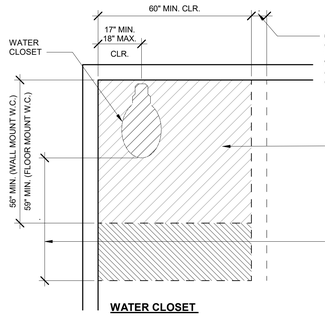

WATER CLOSET

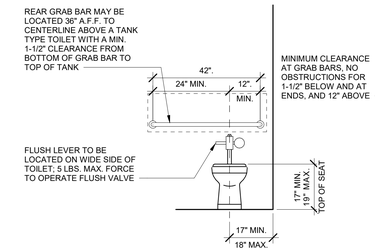

WATER CLOSET AND GRAB BARS

TYPICAL ACCESSIBLE FIXTURE MOUNTING HEIGHTS & CLEARANCES FOR ADULTS 1/2" = 1'-0" | 2

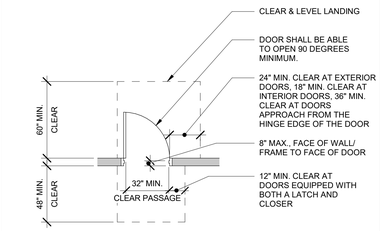

SRH_12_2019

MANEUVERING CLEARANCE AT DOORS 1/4" = 1'-0" | 18

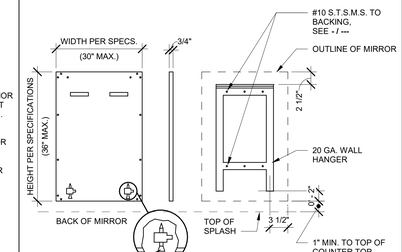

MIRROR ANCHORAGE 1" = 1'-0" | 13

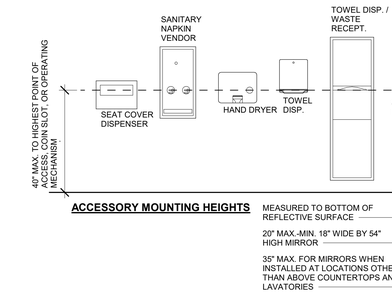

ACCESSORY MOUNTING HEIGHTS

TYPICAL ACCESSORY MOUNTING HEIGHTS 1/2" = 1'-0" | 3

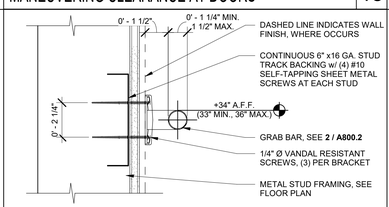

NOTE:
1. GRAB BARS SHALL NOT ROTATE WITHIN THEIR FITTINGS.
2. GRAB BARS AND ANY WALL OR OTHER SURFACE ADJACENT TO GRAB BARS SHALL BE FREE OF SHARP OR ABRASIVE ELEMENTS AND SHALL HAVE ROUNDED EDGES.
3. THERE SHALL BE NO PROJECTING ELEMENTS MOUNTED TO WALLS WITHIN 12" ABOVE OR 1-1/2" BELOW GRAB BARS.

GRAB BAR ANCHORAGE 3" = 1'-0" | 19

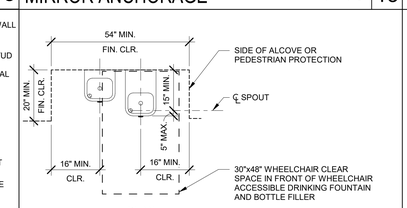

PLAN

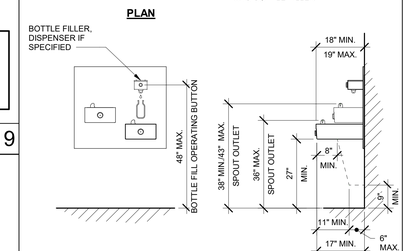

ELEVATION **SECTION**

NOTES:
1. THE MANUAL MECHANISM FOR THE DRINKING FOUNTAIN SHALL BE FRONT MOUNTED OR SIDE MOUNTED AND LOCATED WITHIN 6" OF THE FRONT EDGE OF THE FOUNTAIN.
2. THE SPOUT SHALL PROVIDE A STREAM OF WATER AT LEAST 4" HIGH.
3. THE ANGLE OF THE WATER STREAM SHALL BE MEASURED HORIZONTALLY RELATIVE TO THE FRONT FACE OF THE UNIT. WHERE SPOUTS ARE LOCATED LESS THAN 3 INCHES FROM THE FRONT OF THE UNIT, THE ANGLE OF THE WATER STREAM SHALL BE 30 DEGREES MAXIMUM. WHERE SPOUTS ARE LOCATED BETWEEN 3 INCHES AND 5 INCHES MAXIMUM FROM THE FRONT OF THE UNIT, THE ANGLE OF THE WATER STREAM SHALL BE 15 DEGREES MAXIMUM.
4. VERIFY D.F. MFR./MODEL WITH PLUMBING DWGS.

ACCESSIBLE DRINKING FOUNTAIN 1/2" = 1'-0" | 15

NOTES:
1. ACCESSIBLE SINKS SHALL COMPLY WITH C.B.C. SECTION 11B-606 AND 11B-305. A MIN. 30"x48" CLEAR SPACE SHALL BE PROVIDED IN FRONT OF THE SINK TO ALLOW FOR A FORWARD APPROACH, A MIN. 30" WIDE CLEAR SPACE SHALL EXTEND A MIM. OF 19" UNDERNEATH THE COUNTER.
2. WATER SUPPLY AND DRAIN PIPES SHALL BE INSULATED OR OTHERWISE CONFIGURED TO PROTECT AGAINST CONTACT. THERE SHALL BE NO SHARP OR ABRASIVE SURFACES UNDER SINKS.
3. FAUCETS AND CONTROLS SHALL BE OPERABLE WITH ONE HAND AND SHALL NOT REQUIRE TIGHT GRASPING, PINCHING, OR TWISTING OF THE WRIST. THE FORCE REQUIRED TO OPERATE CONTROLS SHALL NOT EXCEED A 5 LB. FORCE. SELF CLOSING VALVES SHALL REMAIN OPEN FOR AT LEAST 10 SECONDS.

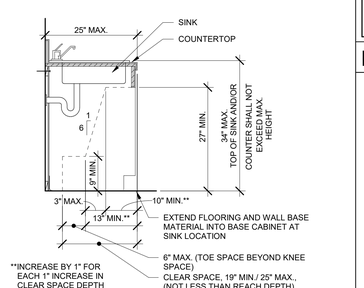

SRH_12_2019

ACCESSIBLE SINK KNEE/TOE CLEARANCE 3/4" = 1'-0" | 10

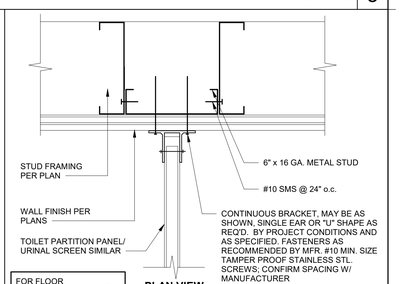

PARTITION ANCHORAGE 3" = 1'-0" | 4

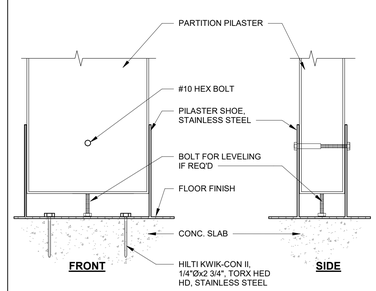

PARTITION BASE ANCHORAGE 3" = 1'-0" | 5

TETER, INC.
FRESNO HEADQUARTERS
VISALIA | BAKERSFIELD | MODESTO | SAN LUIS OBISPO
ARCHITECTS ENGINEERS CONNECTED

VISALIA CAMPUS UNIVERSITY CENTER
COLLEGE OF THE SEQUOIAS - INCREMENT 2
915 S. MOONEY BLVD
VISALIA, CALIFORNIA

DRAWING TITLE
TYPICAL ACCESSIBILITY AND SIGNAGE DETAILS

PROJECT NO.
22-12498

DRAWING
A800.2

\\tet-file1\Users\tara.chong_TETR\Documents\12498-A-UC_tara.chong.rvt

ATTENDANT ASSISTANCE SIGN (AAS)

1. SEE INTERIOR ELEVATION FOR POSTED LOCATION.

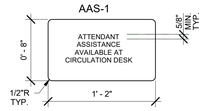

FIRE SPRINKLER ROOM SIGN (FS)

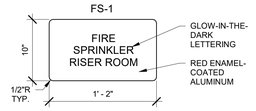

ACCESSIBLE LIFT SIGN (AL)

ALL ACCESSIBLE LIFTS SHALL HAVE THIS SYMBOL ON OR ADJACENT TO ENTRANCE DOOR.

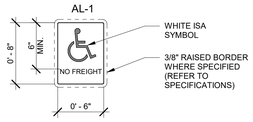

DESIGNATED AISLE SEATING (DAS)

1. SEE FLOOR PLAN AND INTERIOR ELEVATION FOR POSTED LOCATION.



ROOM CAPACITY SIGN (RC)

SINGLE PURPOSE ROOM

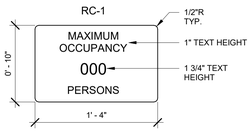

DIAPER CHANGING STATION SIGN (DC)

1. SEE FLOOR PLAN AND INTERIOR ELEVATION FOR POSTED LOCATION.

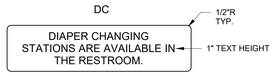

ASSISTIVE LISTENING DEVICE (ALS)

1. SEE INTERIOR ELEVATION FOR POSTED LOCATION.

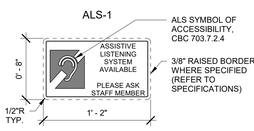

NO SMOKING SIGN (NS)

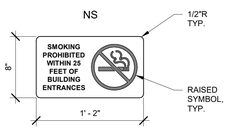

TABLE 11B-703.5.5 (VISUAL CHARACTER HEIGHT)		
HEIGHT TO FINISH FLOOR OR GROUND FROM BASELINE OF CHARACTER	HORIZONTAL VIEWING DISTANCE	MINIMUM CHARACTER HEIGHT
40 INCHES TO LESS THAN OR EQUAL TO 70 INCHES	LESS THAN 72 INCHES	5/8 INCHES
	72 INCHES AND GREATER	5/8 INCHES, PLUS 1/8 INCH PER FOOT OF VIEWING DISTANCE ABOVE 72 INCHES
GREATER THAN 70 INCHES TO LESS THAN OR EQUAL TO 120 INCHES	LESS THAN 180 INCHES	2 INCHES
	180 INCHES AND GREATER	2 INCHES, PLUS 1/8 INCH PER FOOT OF VIEWING DISTANCE ABOVE 180 INCHES
GREATER THAN 120 INCHES	LESS THAN 21 FEET	3 INCHES
	21 FEET AND GREATER	3 INCHES, PLUS 1/8 INCH PER FOOT OF VIEWING DISTANCE ABOVE 21 FOOT

GENERAL NOTES:

1. INFORMATIONAL SIGNAGE SHALL COMPLY WITH CBC 11B-703.5
2. INFORMATIONAL SIGNS ARE NOT REQUIRED TO HAVE RAISED CHARACTERS AND ACCOMPANYING BRAILLE.
3. LETTERING TO BE 3/4" HIGH MIN. U.N.O.

FINISH AND CONTRAST (CBC 11B-703.5.1): VISUAL CHARACTERS AND THEIR BACKGROUND SHALL HAVE A NON-GLARE FINISH. CHARACTERS SHALL CONTRAST WITH THEIR BACKGROUND WITH EITHER LIGHT CHARACTERS ON A DARK BACKGROUND OR DARK CHARACTERS ON A LIGHT BACKGROUND.

CASE (CBC 11B-703.5.2): CHARACTERS SHALL BE UPPERCASE OR LOWERCASE OR A COMBINATION OF BOTH.

STYLE (CBC 11B-703.5.3): CHARACTERS SHALL BE CONVENTIONAL IN FORM. CHARACTERS SHALL NOT BE ITALIC, OBLIQUE, SCRIPT, HIGHLY DECORATIVE, OR OF OTHER UNUSUAL FORMS.

CHARACTER PROPORTIONS (CBC 11B-703.5.4): CHARACTERS SHALL BE SELECTED FROM FONTS WHERE THE WIDTH OF THE UPPERCASE LETTER "O" IS 60 PERCENT MINIMUM AND 110 PERCENT MAXIMUM OF THE HEIGHT OF THE UPPERCASE LETTER "I".

CHARACTER HEIGHT (CBC 11B-703.5.5): MINIMUM CHARACTER HEIGHT SHALL COMPLY WITH TABLE 11B-703.5.5. VIEWING DISTANCE SHALL BE MEASURED AS THE HORIZONTAL DISTANCE BETWEEN THE CHARACTER AND AN OBSTRUCTION PREVENTING FURTHER APPROACH TOWARDS THE SIGN. CHARACTER HEIGHT SHALL BE BASED ON THE UPPERCASE LETTER "I".

STROKE THICKNESS (CBC 11B-703.5.7): STROKE THICKNESS OF THE UPPERCASE LETTER "I" SHALL BE 10 PERCENT MINIMUM AND 20 PERCENT MAXIMUM OF THE HEIGHT OF THE CHARACTER.

CHARACTER SPACING (CBC 11B-703.5.8): CHARACTER SPACING SHALL BE MEASURED BETWEEN THE TWO CLOSEST POINTS OF ADJACENT CHARACTERS, EXCLUDING WORD SPACES. SPACING BETWEEN INDIVIDUAL CHARACTERS SHALL BE 10 PERCENT MINIMUM AND 35 PERCENT MAXIMUM OF CHARACTER HEIGHT.

LINE SPACING (CBC 11B-703.5.9): SPACING BETWEEN THE BASELINES OF SEPARATE LINES OF CHARACTERS WITHIN A MESSAGE SHALL BE 135 PERCENT MINIMUM AND 170 PERCENT MAXIMUM OF THE CHARACTER HEIGHT.

FORMAT (CBC 11B-703.5.10): TEXT SHALL BE IN A HORIZONTAL FORMAT.

PICTOGRAMS (CBC 11B-703.6): PICTOGRAMS SHALL HAVE A FIELD HEIGHT OF 6 INCHES MINIMUM, CHARACTERS AND BRAILLE SHALL NOT BE LOCATED IN THE PICTOGRAM FIELD. PICTOGRAMS AND THEIR FIELD SHALL HAVE A NON-GLARE FINISH, PICTOGRAMS SHALL CONTRAST WITH THEIR FIELD WITH EITHER A LIGHT PICTOGRAM ON A DARK FIELD OR A DARK PICTOGRAM ON A LIGHT FIELD. PICTOGRAMS SHALL HAVE TEXT DESCRIPTORS LOCATED DIRECTLY BELOW THE PICTOGRAM FIELD AND BRAILLE TRANSLATION BELOW TEXT DESCRIPTION, TEXT DESCRIPTORS SHALL COMPLY WITH CBC SECTIONS 11B-703.2, 11B-703.3, AND 11B-703.4.1.

SYMBOL OF ACCESSIBILITY (CBC 11B-703.7): SYMBOLS OF ACCESSIBILITY AND THEIR BACKGROUND SHALL HAVE A NON-GLARE FINISH. SYMBOLS OF ACCESSIBILITY SHALL CONTRAST WITH THEIR BACKGROUND WITH EITHER A LIGHT SYMBOL ON A DARK BACKGROUND OR A DARK SYMBOL ON A LIGHT BACKGROUND.

SRH_12_2019

INFORMATIONAL SIGNAGE

1 1/2" = 1'-0" | 18

TYPICAL ROOM IDENTIFICATION

WALL MOUNTED TOILET SIGNAGE AT ACCESSIBLE TOILETS (TRW)

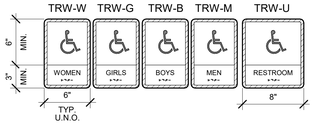

WALL MOUNTED ACCESSIBLE ACCESS SIGN (ISA)

SYMBOL SHALL COMPLY WITH CBC 11B-703.7.2.1

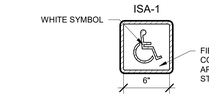

WALL MOUNTED IDENTIFICATION SIGNAGE @ FUNCTIONAL ROOMS (RN)

COORDINATE ROOM NAME AND NUMBER WITH OWNER PRIOR TO FABRICATION. DO NOT USE IDENTIFICATION FOUND ON THE DRAWINGS, U.N.O.



2. BLANK PLATE, TO MATCH SIZE OF ROOM IDENTIFICATION SIGNAGE (RN-1).



WALL MOUNTED TACTILE EXIT SIGN (TE)

1. EXIT DOOR LEADS DIRECTLY TO GRADE LEVEL EXTERIOR EXIT, SIGN TO STATE: "EXIT"



2. EACH EXIT ACCESS DOOR FROM AN INTERIOR ROOM OR AREA THAT IS REQUIRED TO HAVE A VISUAL EXIT SIGN, SHALL BE IDENTIFIED BY A TACTILE EXIT SIGN WITH THE WORDS, "EXIT ROUTE."



3. EXIT DOOR LEADS DIRECTLY TO GRADE LEVEL EXTERIOR EXIT BY MEANS OF RAMP OR STAIR, SIGN TO STATE: "EXIT RAMP DOWN", "EXIT STAIR DOWN", "EXIT RAMP UP", AND "EXIT STAIR UP".



2. EACH EXIT ACCESS DOOR FROM AN INTERIOR ROOM OR AREA THAT IS REQUIRED TO HAVE A VISUAL EXIT SIGN, LEADS DIRECTLY TO GRADE LEVEL EXIT BY MEANS OF RAMP, SIGN TO STATE: "EXIT ROUTE DOWN"



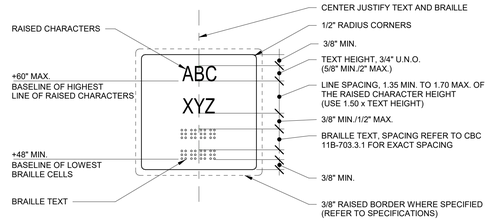

TYPICAL ROOM IDENTIFICATION OR TACTILE EXIT SIGN



SIGN WITH PICTOGRAM

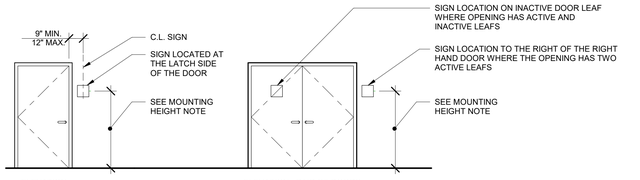



SIGN MOUNTING HEIGHT AND LOCATION

NOTES:

GENERAL: SIGNAGE SHALL COMPLY WITH CBC SECTION 11B-703, RAISED CHARACTER SIGNS SHALL COMPLY WITH CBC 11B-703.2, 11B-703.3 AND 11B-703.4

RAISED CHARACTERS (CBC 11B-703.2): RAISED CHARACTERS (TEXT) SHALL COMPLY WITH CBC SECTION 11B-703.2 AND SHALL BE DUPLICATED IN BRAILLE. RAISED CHARACTERS SHALL BE UPPER CASE AND BE RAISED 1/32-INCH MINIMUM ABOVE THEIR BACKGROUND. CHARACTERS SHALL BE SANS SERIF AND NOT BE ITALIC, OBLIQUE, SCRIPT, HIGHLY DECORATIVE, OR OTHER UNUSUAL FORMS. CHARACTERS SHALL BE SELECTED FROM FONTS WHERE THE WIDTH OF THE UPPERCASE LETTER "O" IS 60 PERCENT MINIMUM AND 110 PERCENT MAXIMUM OF THE HEIGHT OF THE UPPERCASE LETTER "I". CHARACTER HEIGHT MEASURED VERTICALLY FROM THE BASELINE OF THE CHARACTER SHALL BE 5/8-INCH MINIMUM AND 2 INCHES MAXIMUM BASED ON THE HEIGHT OF THE UPPERCASE LETTER "I". STROKE THICKNESS OF THE UPPERCASE LETTER "I" SHALL BE 15 PERCENT MAXIMUM OF THE HEIGHT OF THE CHARACTER. TEXT SHALL BE IN A HORIZONTAL FORMAT. CHARACTERS AND THEIR BACKGROUND SHALL HAVE A NON-GLARE FINISH. CHARACTERS SHALL CONTRAST WITH THEIR BACKGROUND WITH EITHER LIGHT CHARACTERS ON A DARK BACKGROUND OR DARK CHARACTERS ON A LIGHT BACKGROUND.

BRAILLE (CBC 11B-703.3): BRAILLE SHALL BE CONTRACTED (GRADE 2) AND SHALL COMPLY WITH CBC SECTIONS 11B-703.3. BRAILLE DOTS SHALL HAVE A DOMED OR ROUNDED SHAPE AND SHALL COMPLY WITH CBC TABLE 703.3.1. BRAILLE SHALL BE POSITIONED BELOW THE CORRESPONDING TEXT IN A HORIZONTAL FORMAT, CENTER JUSTIFIED. IF TEXT IS MULTI-LINED, BRAILLE SHALL BE PLACED BELOW THE ENTIRE TEXT. BRAILLE SHALL BE SEPARATED 3/8 INCH MINIMUM AND 1/2 INCH MAXIMUM FROM ANY OTHER TACTILE CHARACTERS AND 3/8 INCH MINIMUM AND FROM RAISED BORDERS AND DECORATIVE ELEMENTS.

MOUNTING HEIGHT (CBC 11B-703.4.1): TACTILE CHARACTERS ON SIGNS SHALL BE LOCATED 48 INCHES MINIMUM ABOVE THE FINISH FLOOR OR GROUND SURFACE, MEASURED FROM THE BASELINE OF THE LOWEST BRAILLE CELLS AND 60 INCHES MAXIMUM ABOVE THE FINISH FLOOR OR GROUND SURFACE, MEASURED FORM THE BASELINE OF THE HIGHEST LINE OF RAISED CHARACTERS.

LOCATION (CBC 11B-703.4.2): SIGNS SHALL BE LOCATED ALONGSIDE THE DOOR AT THE LATCH SIDE. WHERE A TACTILE SIGN IS PROVIDED AT DOUBLE DOORS WITH ONE ACTIVE LEAF, THE SIGN SHALL BE LOCATED ON THE INACTIVE LEAF. WHERE A TACTILE SIGN IS PROVIDED AT DOUBLE DOORS WITH TWO ACTIVE LEAFS, THE SIGN SHALL BE LOCATED TO THE RIGHT OF THE RIGHT HAND DOOR. WHERE THERE IS NO WALL SPACE AT THE LATCH SIDE OF A SINGLE DOOR OR AT THE RIGHT SIDE OF DOUBLE DOORS, SIGNS SHALL BE LOCATED ON THE NEAREST ADJACENT WALL. SIGNS CONTAINING TACTILE CHARACTERS SHALL BE LOCATED SO THAT A CLEAR FLOOR SPACE OF 18 INCHES MINIMUM BY 18 INCHES MINIMUM, CENTERED ON THE TACTILE CHARACTERS, IS PROVIDED BEYOND THE ARC OF ANY DOOR SWING BETWEEN THE CLOSED POSITION AND 45 DEGREE OPEN POSITION. WHERE PROVIDED, SIGNS IDENTIFYING PERMANENT ROOMS AND SPACES SHALL BE LOCATED AT THE ENTRANCE TO, AND OUTSIDE OF THE ROOM OR SPACE. WHERE PROVIDED, SIGNS IDENTIFYING EXITS SHALL BE LOCATED AT THE EXIT DOOR WHEN APPROACHED IN THE DIRECTION OF EGRESS TRAVEL.

PICTOGRAMS (CBC 11B-703.6): PICTOGRAMS SHALL HAVE A FIELD HEIGHT OF 6 INCHES MINIMUM, CHARACTERS AND BRAILLE SHALL NOT BE LOCATED IN THE PICTOGRAM FIELD. PICTOGRAMS AND THEIR FIELD SHALL HAVE A NON-GLARE FINISH, PICTOGRAMS SHALL CONTRAST WITH THEIR FIELD WITH EITHER A LIGHT PICTOGRAM ON A DARK FIELD OR A DARK PICTOGRAM ON A LIGHT FIELD. PICTOGRAMS SHALL HAVE TEXT DESCRIPTORS LOCATED DIRECTLY BELOW THE PICTOGRAM FIELD AND BRAILLE TRANSLATION BELOW TEXT DESCRIPTION, TEXT DESCRIPTORS SHALL COMPLY WITH CBC SECTIONS 11B-703.2, 11B-703.3, AND 11B-703.4.1.

SRH_12_2019

TYPICAL ROOM IDENTIFICATION AND TACTILE SIGNAGE

1 1/2" = 1'-0" | 3

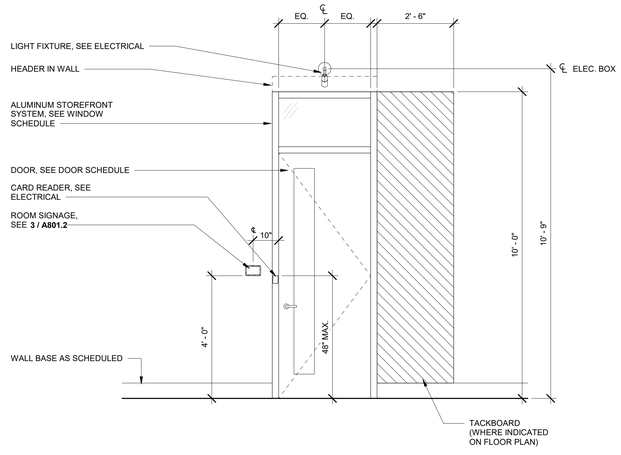

TYP. CLASSROOM DOOR ELEVATION

1/2" = 1'-0" | 10

TOILET ROOM DOOR IDENTIFICATION SYMBOL (TRD)

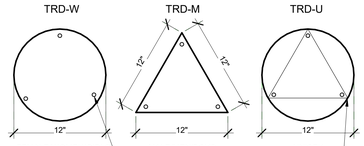

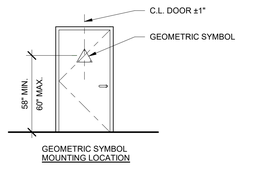

NOTES:

1. SYMBOLS SHALL BE 1/4" THICK; UNISEX SYMBOLS SHALL CONSIST OF A 1/4" THICK TRIANGLE ON A 1/4" THICK CIRCLE.
2. THE COLOR OF THE SYMBOL SHALL CONTRAST WITH THE COLOR OF THE DOOR; FOR UNISEX SIGNS, THE COLOR OF THE CIRCLE SHALL CONTRAST WITH THE DOOR AND THE COLOR OF THE TRIANGLE SHALL CONTRAST WITH THE CIRCLE; CONTRAST SHALL BE LIGHT ON DARK OR DARK ON LIGHT.
3. SYMBOLS SHALL NOT CONTAIN BRAILLE, WRITTEN TEXT, OR PICTOGRAMS.
4. EDGES OF SYMBOLS SHALL BE EASED OR ROUNDED AT 1/16" MINIMUM OR CHAMFERED AT 1/8" MAXIMUM. VERTICES OF TRIANGLES SHALL BE RADIUSED BETWEEN 1/8" MIN./ 1/4" MAX.
5. SYMBOLS SHALL BE LOCATED ON DOORS TO TOILET ROOMS, WHERE NO DOORS ARE PROVIDED, SYMBOLS SHALL BE LOCATED ON THE WALL ADJACENT TO THE ENTRANCE OPENING.

SRH_12_2019

SYMBOLS FOR TOILET ROOMS

1 1/2" = 1'-0" | 5

PLOT DATE: 11/10/2025 9:01:27 AM

IDENTIFICATION STAMP:
DIV. OF THE STATE ARCHITECT
APP: 02-122821 INC: 2
REVIEWED FOR
SS ☑ FLS ☑ ACS ☑
DATE: 11/20/2025

Teter, Inc. expressly reserves its common law copyright and other property rights in these plans. This document, the ideas and designs incorporated herein, as an instrument of professional service, is not to be used in whole or in part, for any other project without prior written authorization.

MARK	DATE	DESCRIPTION
A	11/13/2025	DSA BACKCHECK

TETER, INC.
FRESNO HEADQUARTERS
VISALIA | BAKERSFIELD | MODESTO | SAN LUIS OBISPO
ARCHITECTS ENGINEERS CONNECTED

VISALIA CAMPUS UNIVERSITY CENTER
COLLEGE OF THE SEQUOIAS - INCREMENT 2
915 S. MOONEY BLVD
VISALIA, CALIFORNIA

DRAWING TITLE
TYPICAL ACCESSIBILITY AND SIGNAGE DETAILS

PROJECT NO.
22-12498

DRAWING
A801.2

\\tet-file1\Users\tara.chong_TETR\Documents\12498-A-UC_tara.chong.rvt

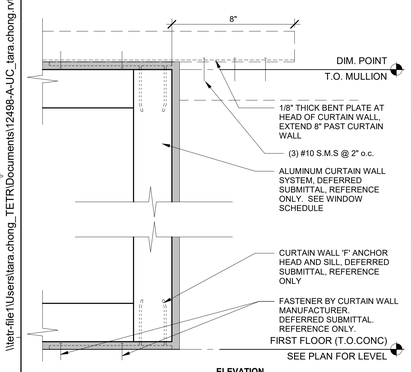

ELEVATION

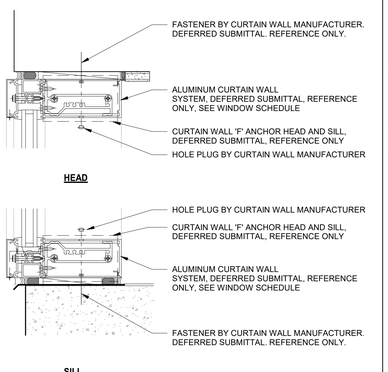

SILL

SEE **25 / A811.2** FOR ADDITIONAL INFORMATION

CURTAIN WALL ANCHORAGE 3" = 1'-0" 22

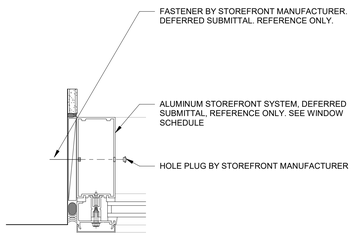

JAMB

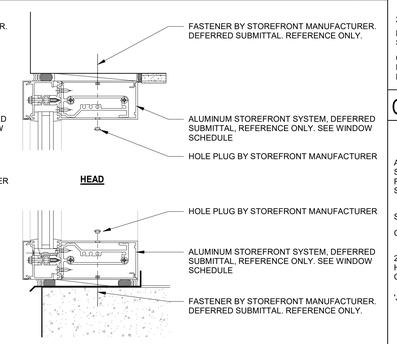

SILL

STOREFRONT ANCHORAGE 3" = 1'-0" 23

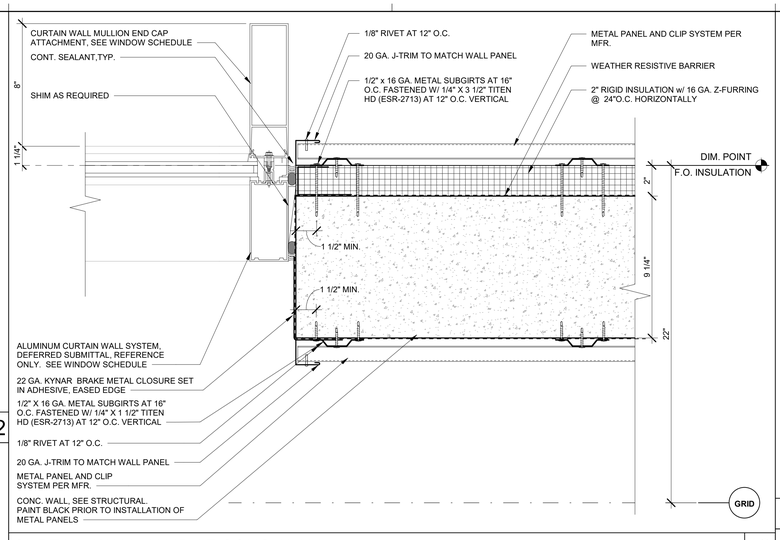

CURTAIN WALL JAMB AT CONC. WALL 3" = 1'-0" 12

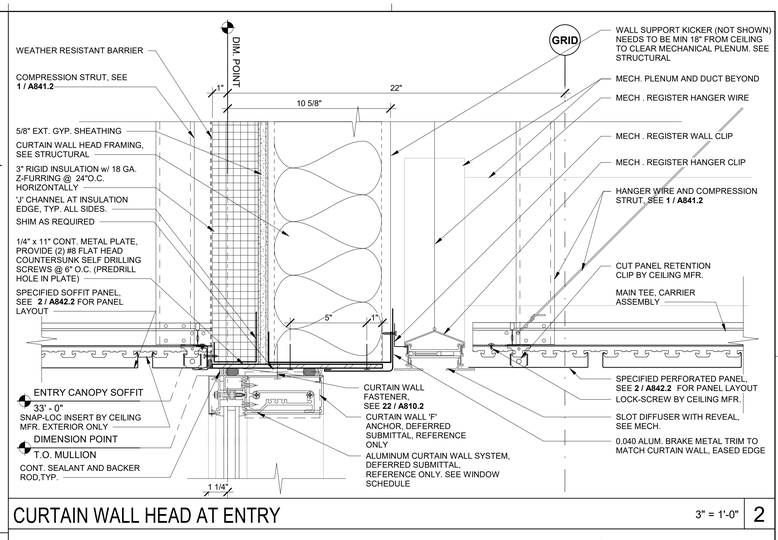

CURTAIN WALL HEAD AT ENTRY 3" = 1'-0" 2

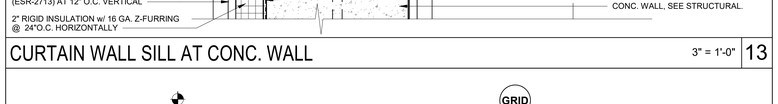

CURTAIN WALL SILL AT CONC. WALL 3" = 1'-0" 13

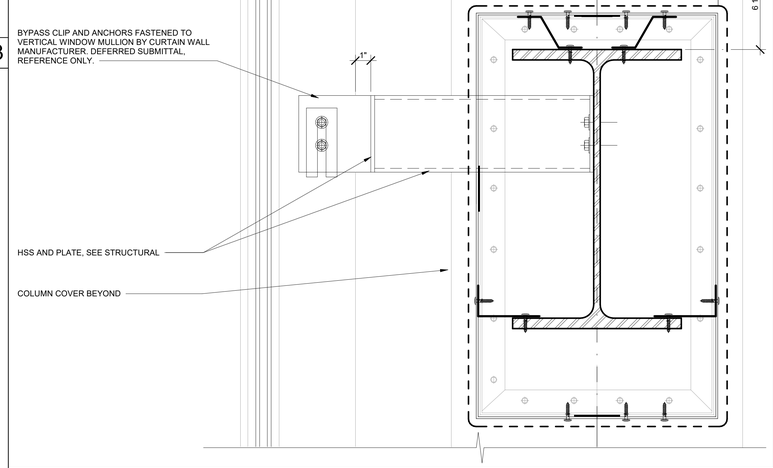

CURTAIN WALL ATTACHMENT TO BEAM AT ENTRY 3" = 1'-0" 4

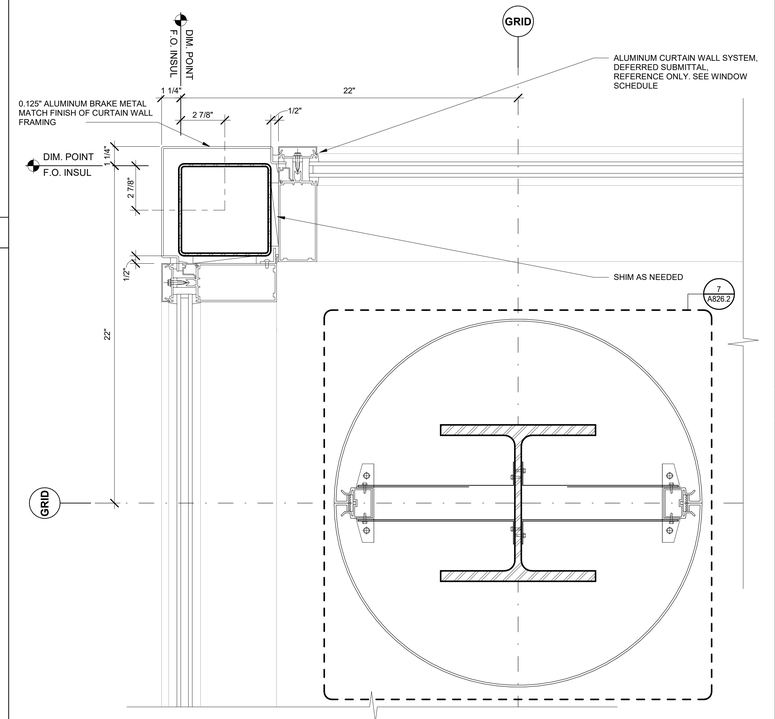

CURTAIN WALL CORNER 3" = 1'-0" 15

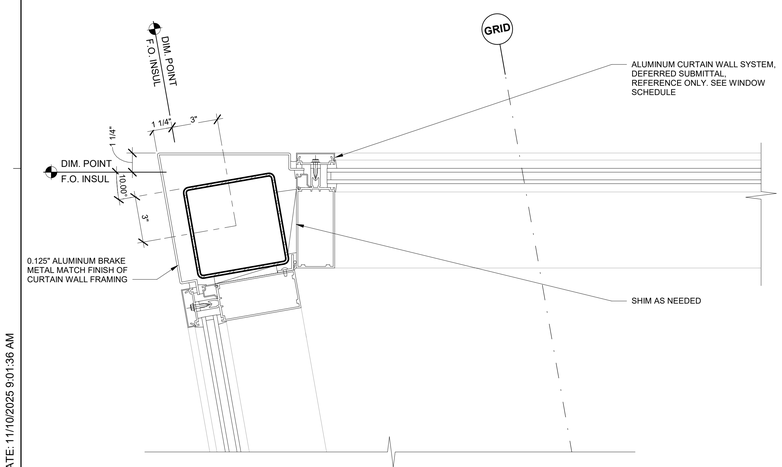

CURTAIN WALL CORNER AT VESTIBULE 3" = 1'-0" 25

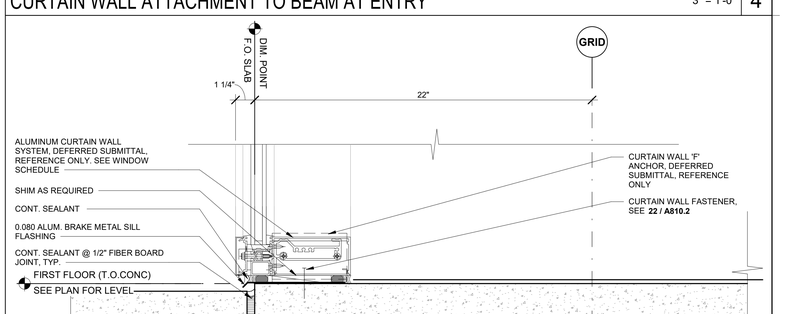

CURTAIN WALL SILL 3" = 1'-0" 5

PLOT DATE: 11/10/2025 9:01:36 AM

IDENTIFICATION STAMP
DIV. OF THE STATE ARCHITECT
APP: 02-122821 INC: 2
REVIEWED FOR
SS ☑ FLS ☑ ACS ☑
DATE: 11/20/2025

Teter, Inc. expressly reserves its common law copyright and other property rights in these plans. This document, the ideas and designs incorporated herein, as an instrument of professional service, is not to be used in whole or in part, for any other project without prior written authorization.

MARK	DATE	DESCRIPTION
A.	11/13/2025	DSA BACKCHECK

LICENSED ARCHITECT STATE OF CALIFORNIA

TETER, INC.
FRESNO HEADQUARTERS
VISALIA | BAKERSFIELD | MODESTO | SAN LUIS OBISPO
ARCHITECTS ENGINEERS CONNECTED

VISALIA CAMPUS UNIVERSITY CENTER
COLLEGE OF THE SEQUOIAS - INCREMENT 2
915 S. MOONEY BLVD
VISALIA, CALIFORNIA

DRAWING TITLE
EXTERIOR OPENING DETAILS

PROJECT NO.
22-12498

DRAWING
A810.2

\\tet-file1\Users\tara.chong_TETR\Documents\12498-A-UC_tara.chong.rvt

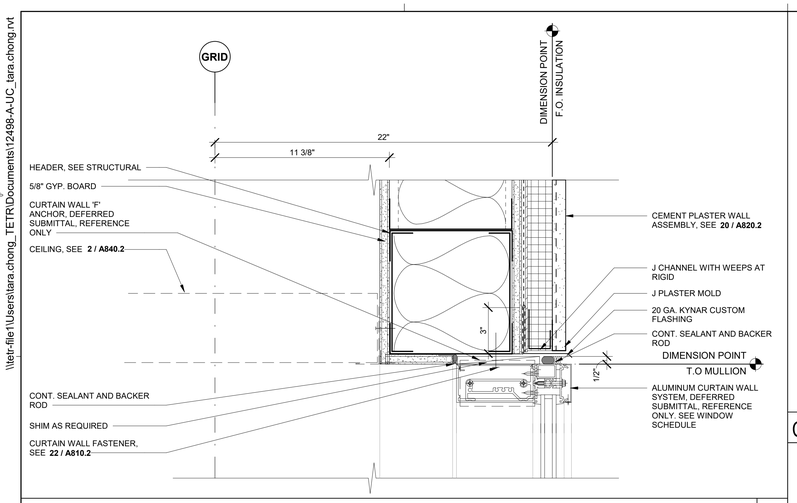

CURTAIN WALL HEAD AT CEILING

3" = 1'-0" | 22

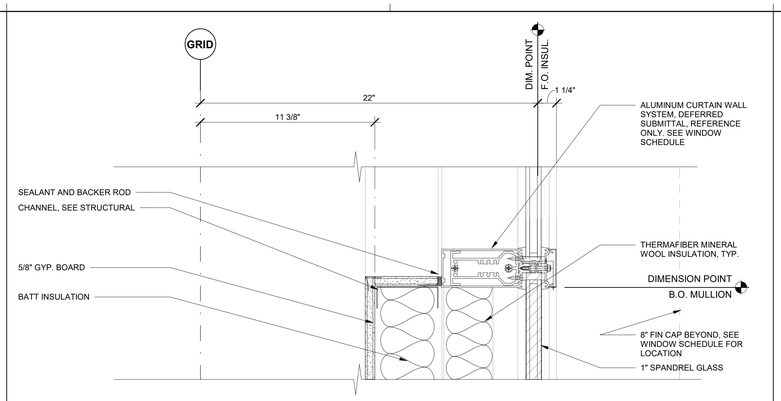

CURTAIN WALL SILL

3" = 1'-0" | 12

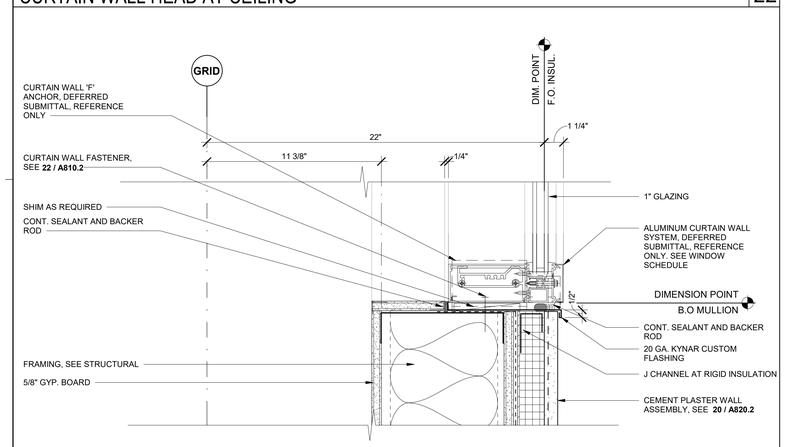

CURTAIN WALL SILL

3" = 1'-0" | 23

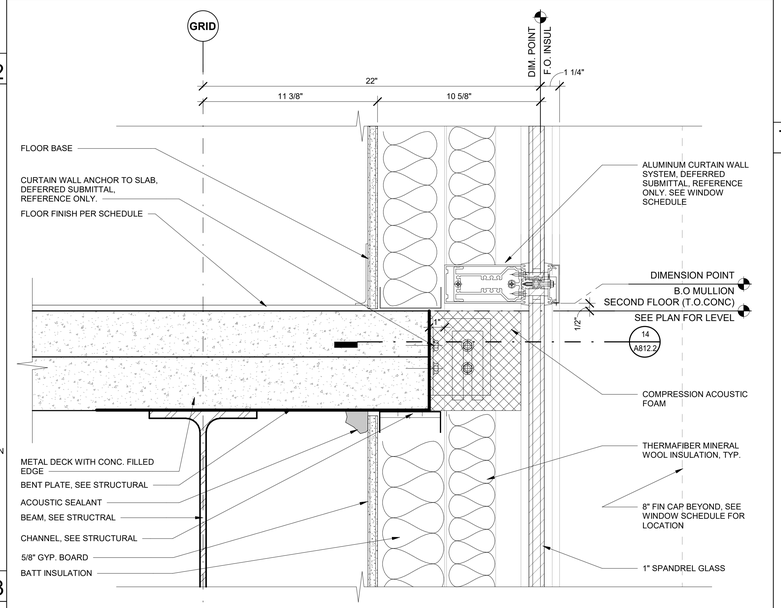

CURTAIN WALL AT SECOND FLOOR

3" = 1'-0" | 14

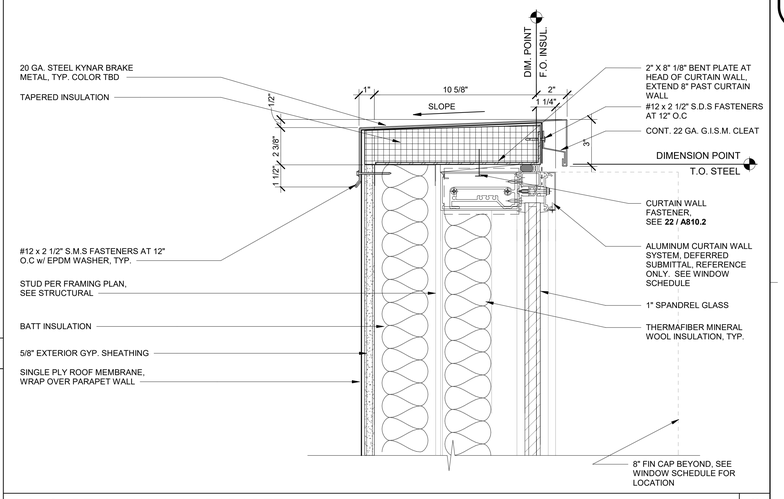

T.O. CURTAIN WALL AT PARAPET

3" = 1'-0" | 2

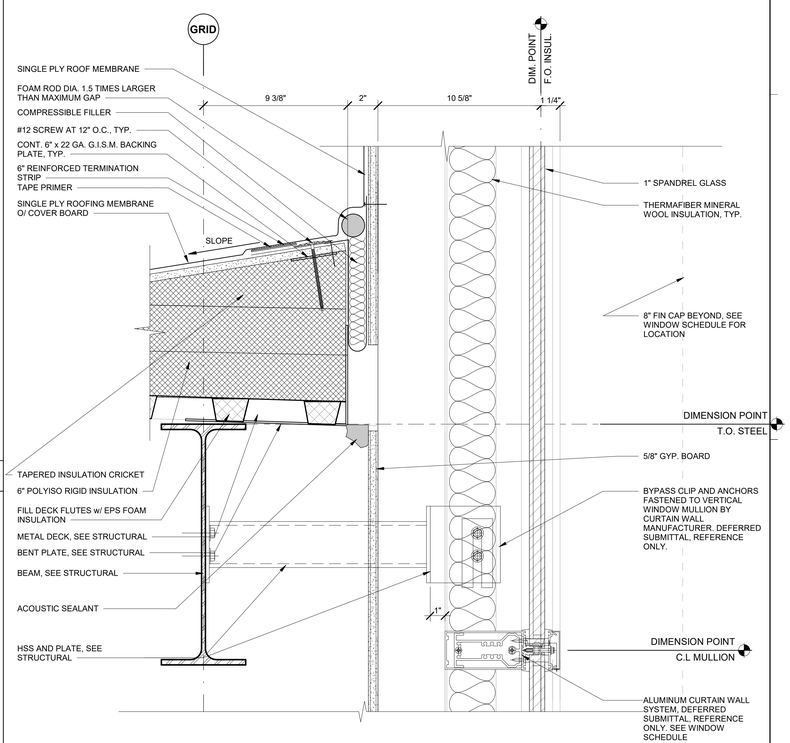

CURTAIN WALL AT ROOF DECK

3" = 1'-0" | 4

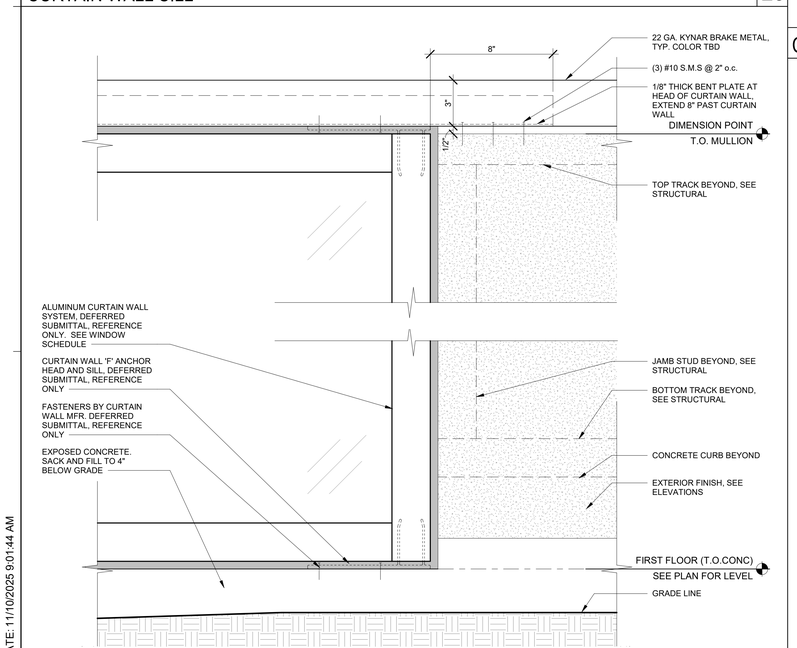

TYP. PARTIAL CURTAIN WALL ELEVATION

3" = 1'-0" | 25

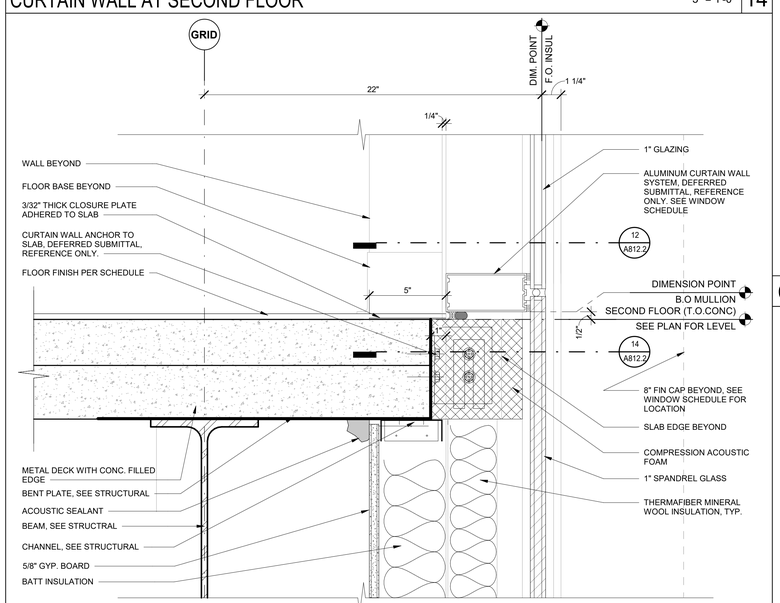

CURTAIN WALL AT SECOND FLOOR

3" = 1'-0" | 15

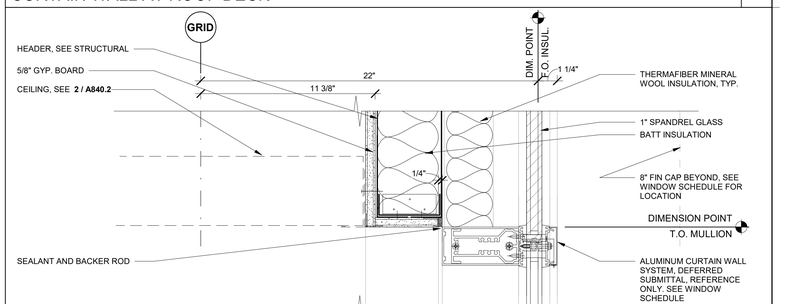

CURTAIN WALL AT CEILING

3" = 1'-0" | 5

PLOT DATE: 11/10/2025 9:01:44 AM

IDENTIFICATION STAMP
DIV. OF THE STATE ARCHITECT
APP: 02-122821 INC: 2
REVIEWED FOR
SS ☑ FLS ☑ ACS ☑
DATE: 11/20/2025

Teter, Inc. expressly reserves its common law copyright and other property rights in these plans. This document, the ideas and designs incorporated herein, as an instrument of professional service, is not to be used in whole or in part, for any other project without prior written authorization.

MARK	DATE	DESCRIPTION
A	11/13/2025	DSA BACKCHECK

LICENSED ARCHITECT — TIMOTHY J. TETER — No. C-26010 — STATE OF CALIFORNIA

TETER, INC.
FRESNO HEADQUARTERS
VISALIA | BAKERSFIELD | MODESTO | SAN LUIS OBISPO
ARCHITECTS ENGINEERS CONNECTED

VISALIA CAMPUS UNIVERSITY CENTER
COLLEGE OF THE SEQUOIAS - INCREMENT 2
915 S. MOONEY BLVD
VISALIA, CALIFORNIA

DRAWING TITLE
EXTERIOR OPENING DETAILS

PROJECT NO.
22-12498

DRAWING
A811.2

\\tet-file1\Users\tara.chong_TETR\Documents\12498-A-UC_tara.chong.rvt

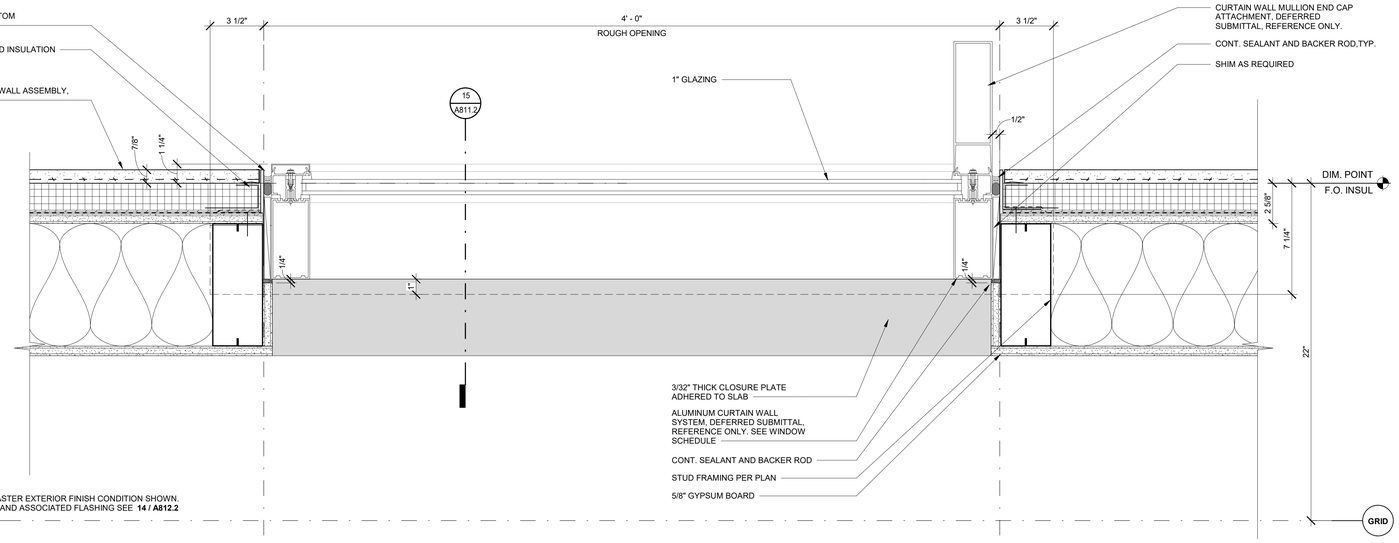

NOTE: CEMENT PLASTER EXTERIOR FINISH CONDITION SHOWN.
FOR METAL PANEL AND ASSOCIATED FLASHING SEE **14 / A812.2**

CURTAIN WALL JAMB CONDITION

3" = 1'-0" | 12

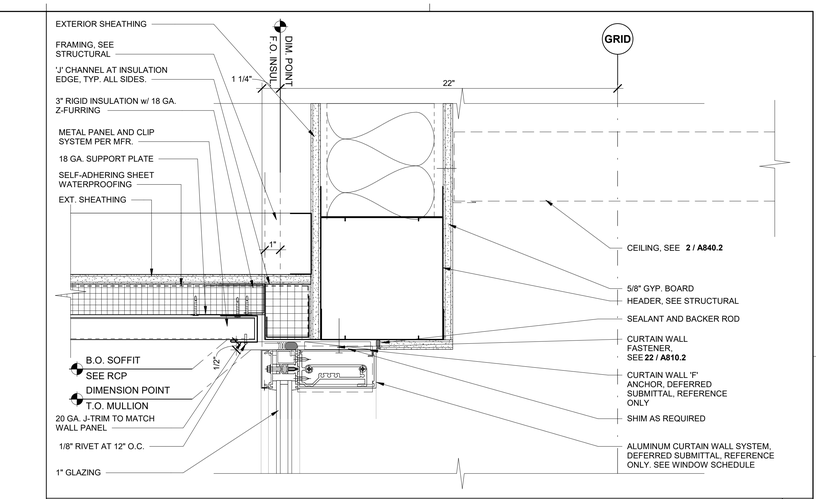

CURTAIN WALL HEAD AT SOFFIT

3" = 1'-0" | 2

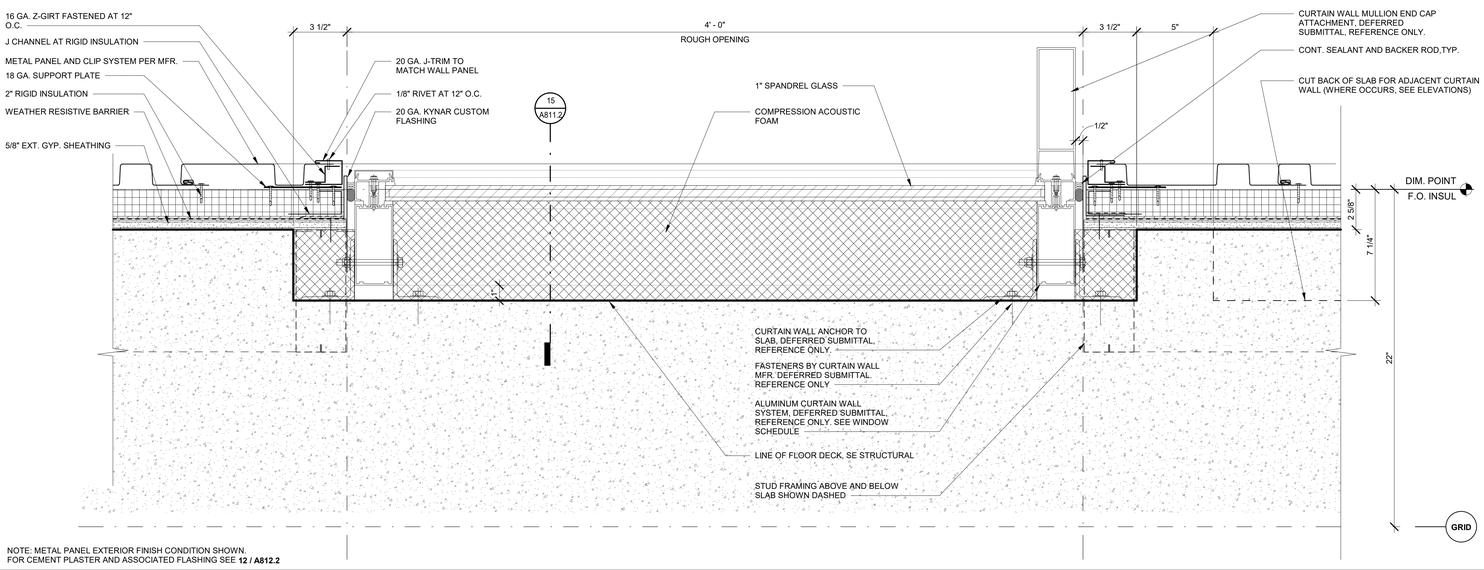

NOTE: METAL PANEL EXTERIOR FINISH CONDITION SHOWN.
FOR CEMENT PLASTER AND ASSOCIATED FLASHING SEE **12 / A812.2**

CURTAIN WALL ANCHOR AT 2F SLAB

3" = 1'-0" | 14

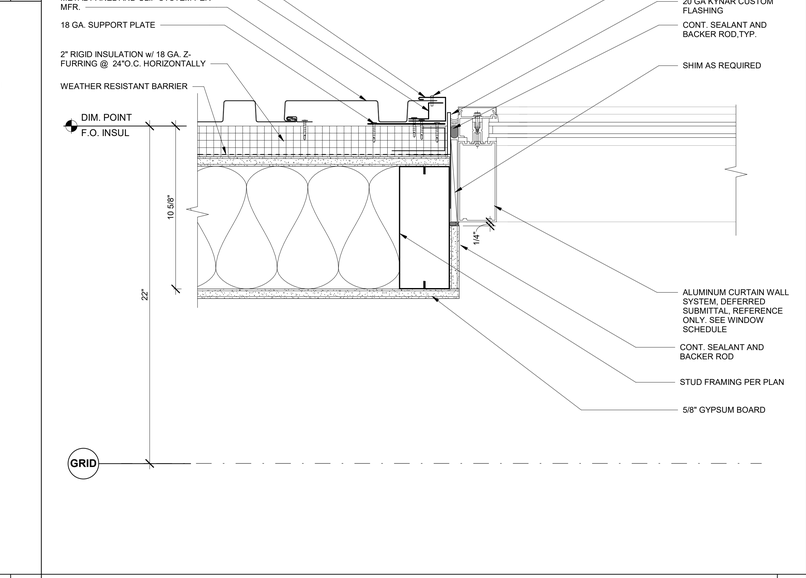

CURTAIN WALL JAMB AT VERTICAL METAL PANEL

3" = 1'-0" | 4

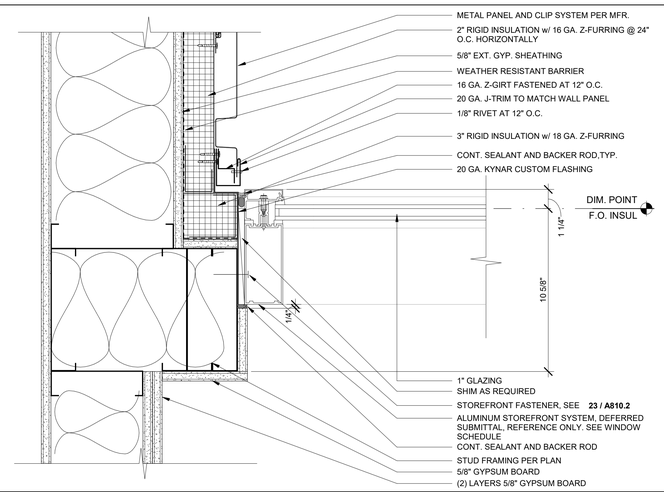

STOREFRONT JAMB AT RETURN

3" = 1'-0" | 25

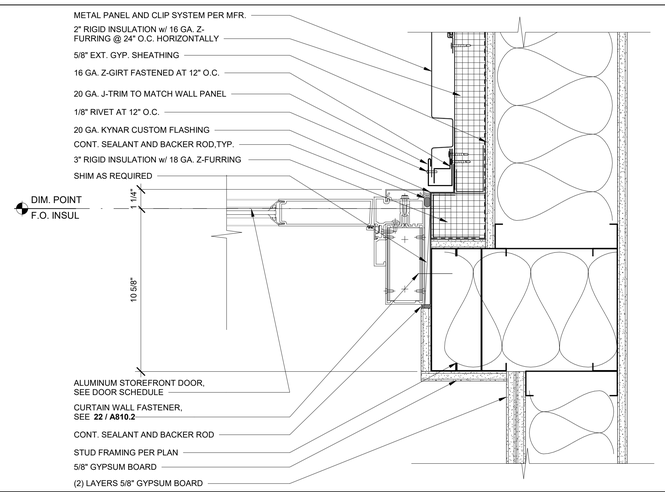

DOOR JAMB AT RETURN

3" = 1'-0" | 15

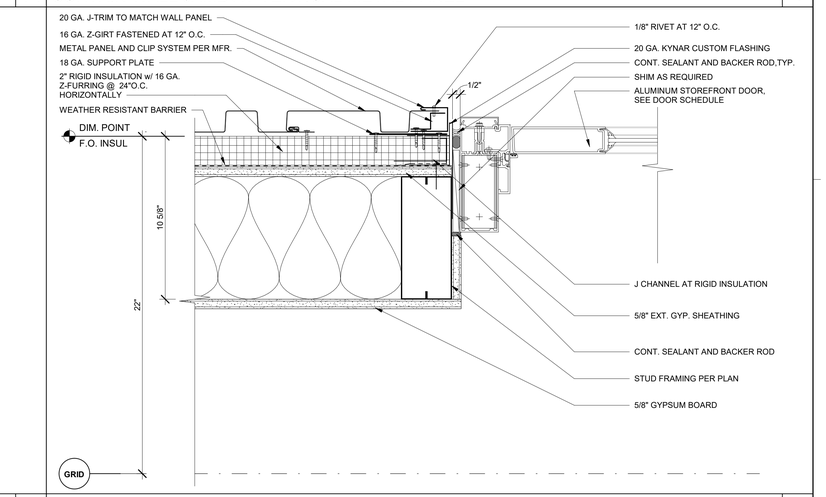

DOOR JAMB AT METAL PANEL

3" = 1'-0" | 5

PLOT DATE: 11/10/2025 9:01:51 AM

IDENTIFICATION STAMP
DIV. OF THE STATE ARCHITECT
APP: 02-122821 INC: 2
REVIEWED FOR
SS ☑ FLS ☑ ACS ☑
DATE: 11/20/2025

Teter, Inc. expressly reserves its common law copyright and other property rights in these plans. This document, the ideas and designs incorporated herein, as an instrument of professional service, is not to be used in whole or part, for any other project without prior written authorization.

MARK	DATE	DESCRIPTION
A	11/13/2025	DSA BACKCHECK

LICENSED ARCHITECT — CONSTRUCTION CONFORMED COPY — STATE OF CALIFORNIA

TETER, INC.
FRESNO HEADQUARTERS
VISALIA | BAKERSFIELD | MODESTO | SAN LUIS OBISPO
ARCHITECTS ENGINEERS CONNECTED

TETER

VISALIA CAMPUS UNIVERSITY CENTER
COLLEGE OF THE SEQUOIAS - INCREMENT 2
915 S. MOONEY BLVD
VISALIA, CALIFORNIA

DRAWING TITLE
EXTERIOR OPENING DETAILS

PROJECT NO.
22-12498

DRAWING
A812.2

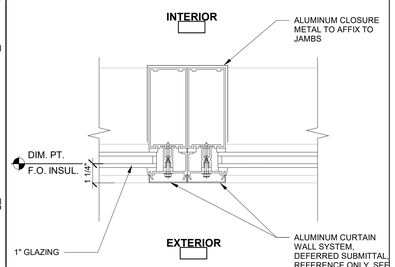

DOUBLE MULLION JAMB 3" = 1'-0" | 26

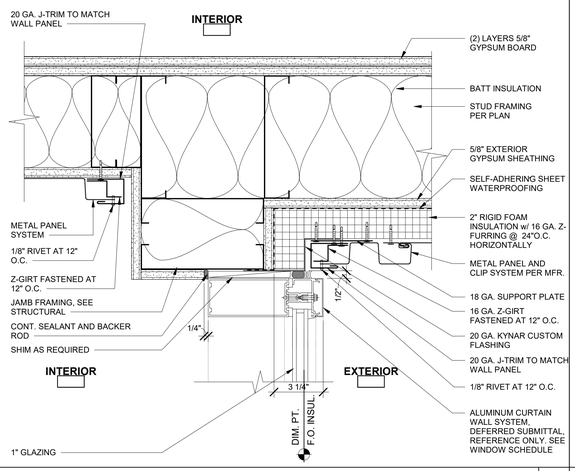

CURTAIN WALL JAMB AT METAL PANEL 3" = 1'-0" | 16

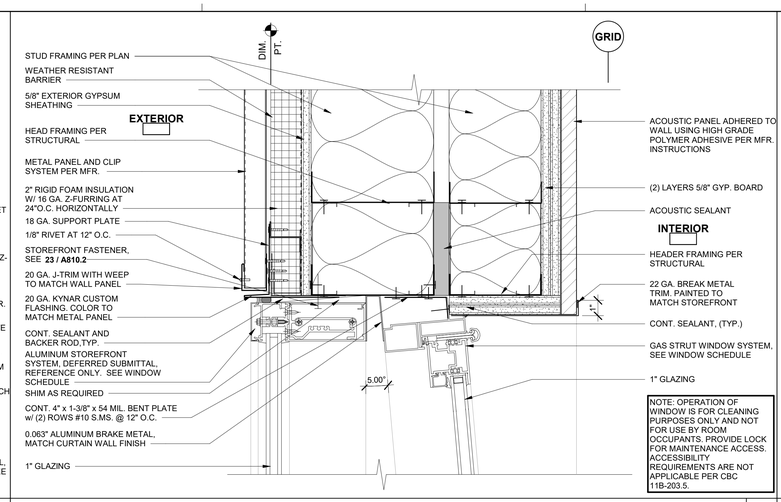

STOREFRONT HEAD AT DOUBLE STUD 3" = 1'-0" | 7

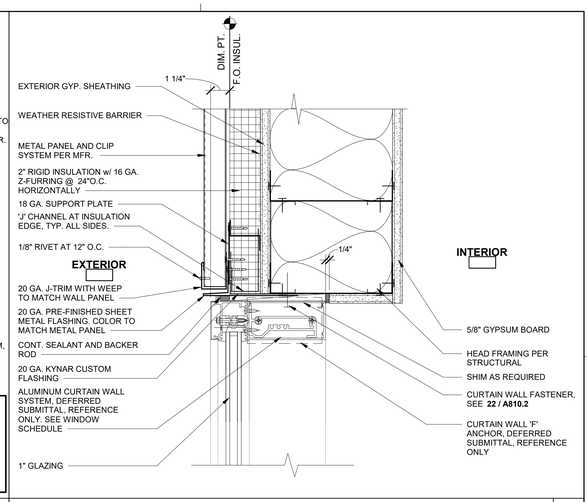

CURTAIN WALL HEAD AT VERTICAL METAL PANEL 3" = 1'-0" | 2

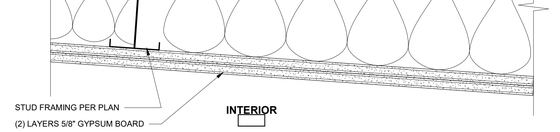

CURTAIN WALL AT JAMB AT CEMENT PLASTER 3" = 1'-0" | 18

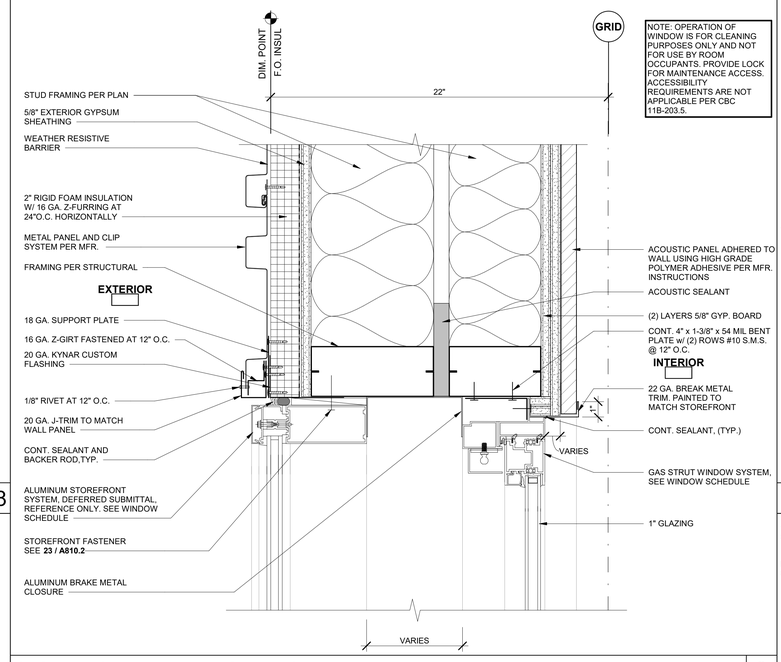

STOREFRONT JAMB AT DOUBLE STUD 3" = 1'-0" | 9

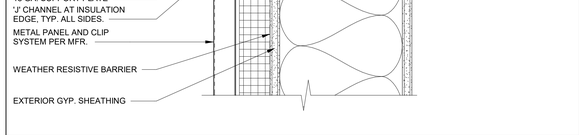

CURTAIN WALL SILL AT METAL PANEL 3" = 1'-0" | 3

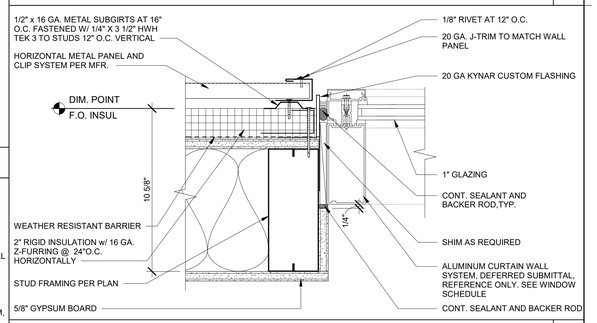

CURTAIN WALL JAMB AT HORIZONTAL METAL PANEL 3" = 1'-0" | 4

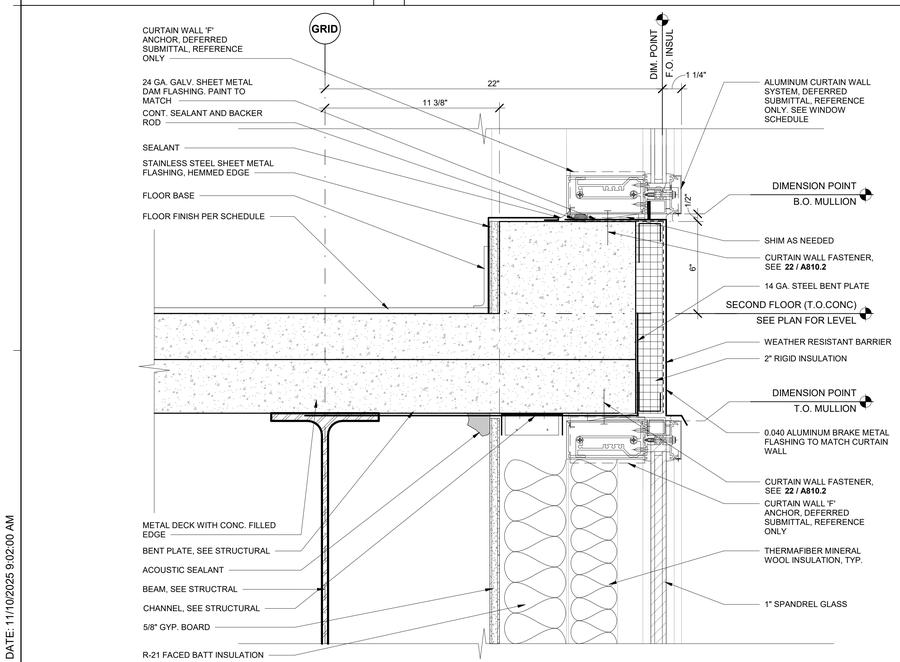

CURTAIN WALL HEAD AND SILL AT 2F 3" = 1'-0" | 20

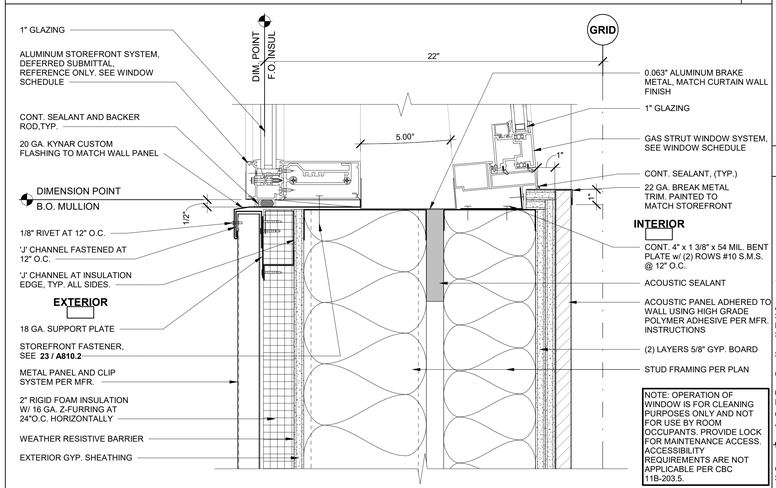

STOREFRONT SILL AT METAL PANEL DOUBLE STUD 3" = 1'-0" | 10

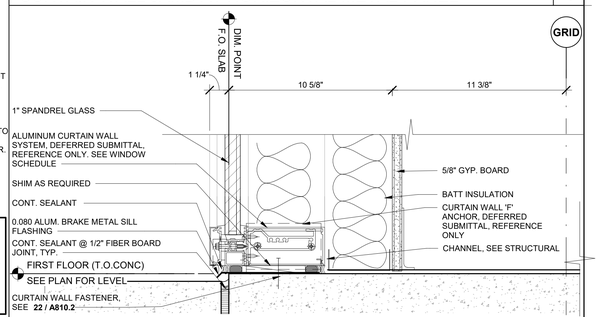

CURTAIN WITH SILL WITH SPANDREL 3" = 1'-0" | 5

IDENTIFICATION STAMP
DIV. OF THE STATE ARCHITECT
APP: 02-122821 INC: 2
REVIEWED FOR
SS ☑ FLS ☑ ACS ☑
DATE: 11/20/2025

Teter, Inc. expressly reserves its common law copyright and other property rights in these plans. This document, the ideas and designs incorporated herein, as an instrument of professional service, is not to be used in whole or in part, for any other project without prior written authorization.

MARK	DATE	DESCRIPTION
A	11/13/2025	DSA BACKCHECK

LICENSED ARCHITECT ★ STATE OF CALIFORNIA ★ CHRISTOPHER J. TETER ★ C-26722 ★ REGISTERED PROFESSIONAL ENGINEER

TETER, INC.
FRESNO HEADQUARTERS
VISALIA | BAKERSFIELD | MODESTO | SAN LUIS OBISPO
ARCHITECTS ENGINEERS CONNECTED

VISALIA CAMPUS UNIVERSITY CENTER
COLLEGE OF THE SEQUOIAS - INCREMENT 2
915 S. MOONEY BLVD
VISALIA, CALIFORNIA

DRAWING TITLE
EXTERIOR OPENING DETAILS

PROJECT NO.
22-12498

DRAWING
A813.2

PLOT DATE: 11/10/2025 9:02:00 AM

\\tet-file1\Users\tara.chong_TETR\Documents\12498-A-UC_tara.chong.rvt

\\tet-file1\Users\tara.chong_TETR\Documents\12498-A-UC_tara.chong.rvt

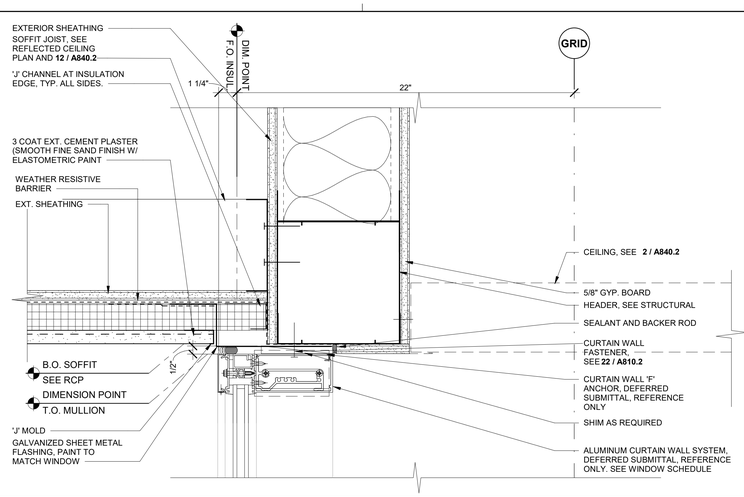

CURTAIN WALL HEAD AT SOFFIT 3" = 1'-0" 22

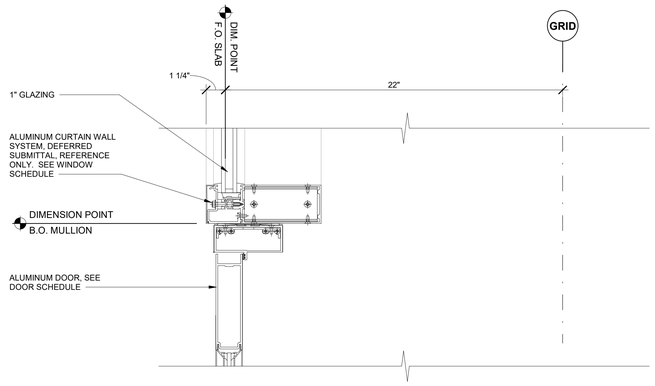

CURTAIN WALL SWING DOOR HEAD 3" = 1'-0" 12

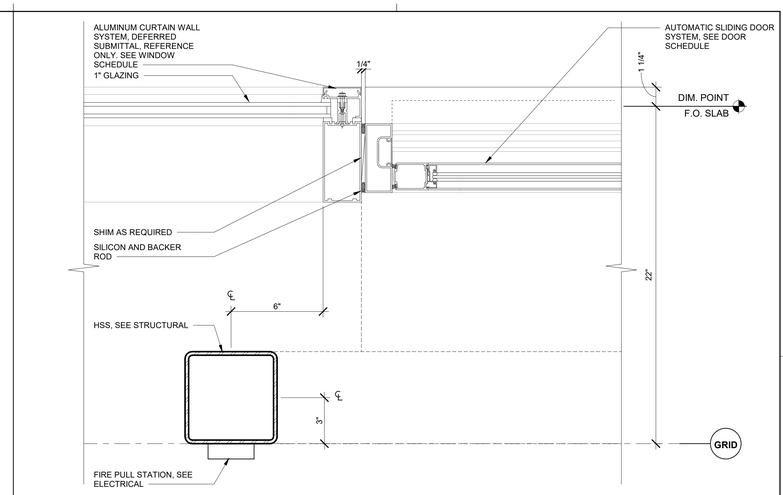

AUTOMATIC DOOR JAMB 3" = 1'-0" 2

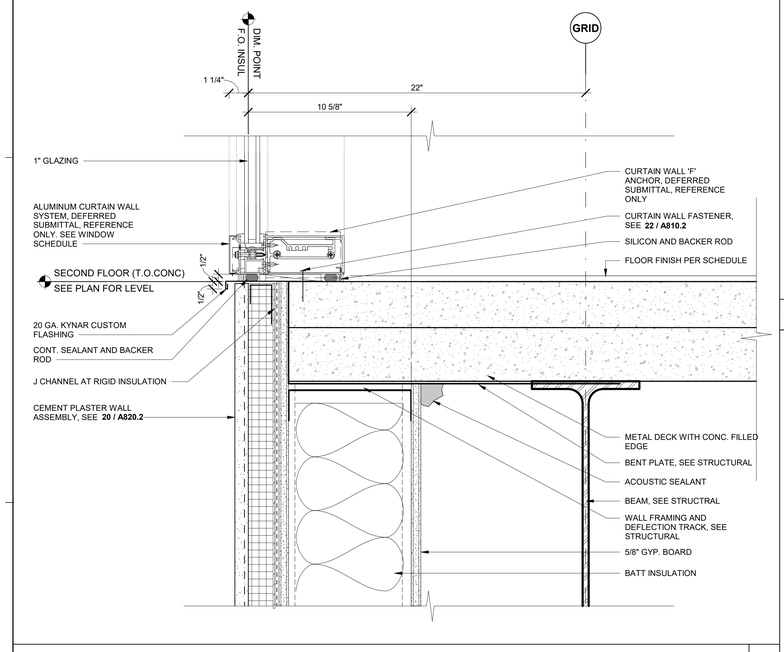

CURTAIN WALL SILL AT 2F 3" = 1'-0" 24

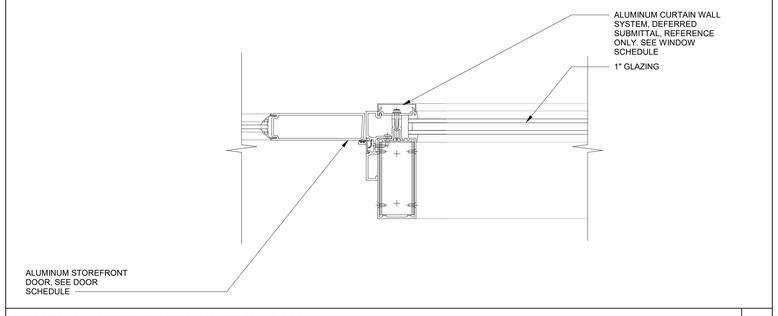

CURTAIN WALL SWING DOOR JAMB 3" = 1'-0" 13

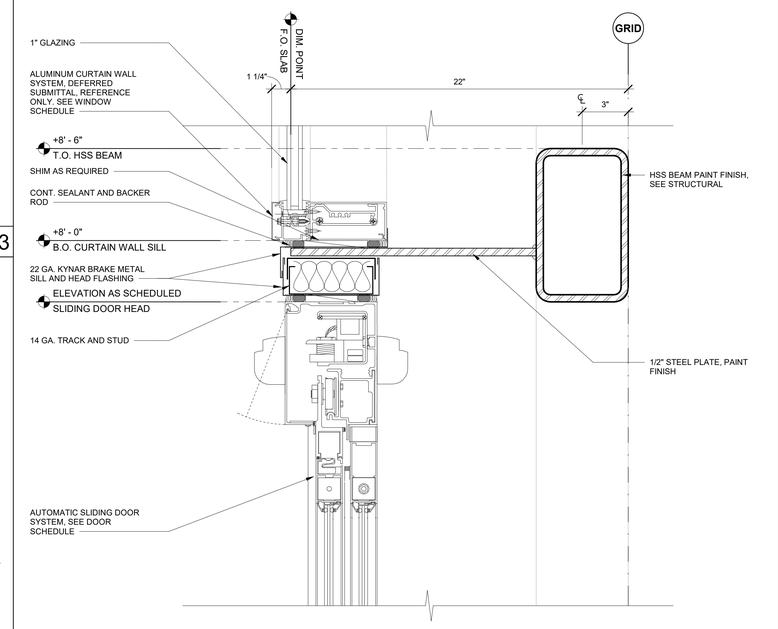

AUTOMATIC DOOR HEAD 3" = 1'-0" 4

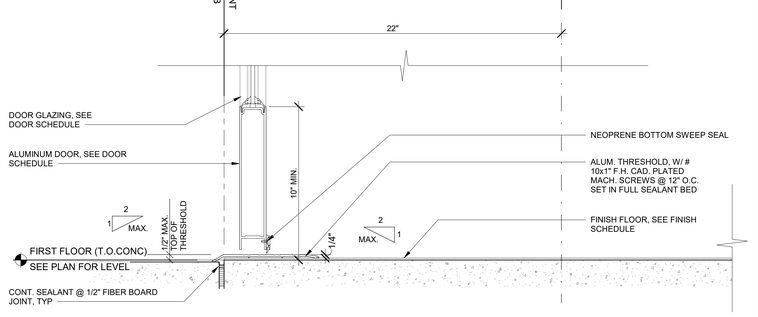

CURTAIN WALL SWING DOOR SILL 3" = 1'-0" 14

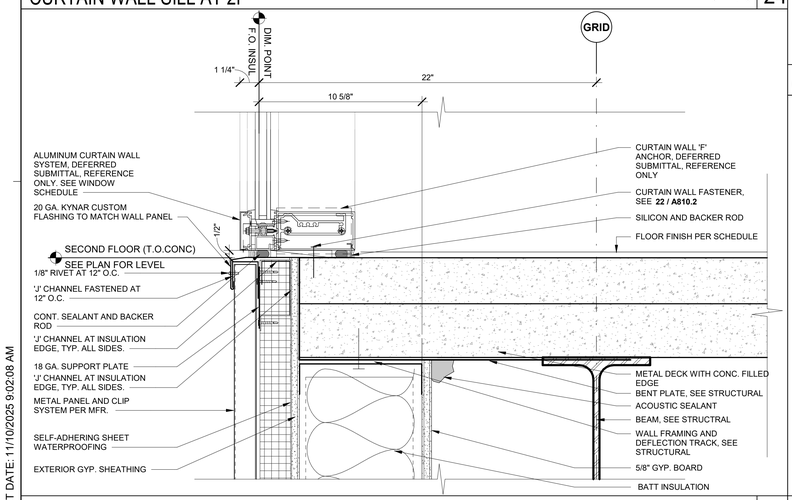

CURTAIN WALL SILL AT 2F 3" = 1'-0" 25

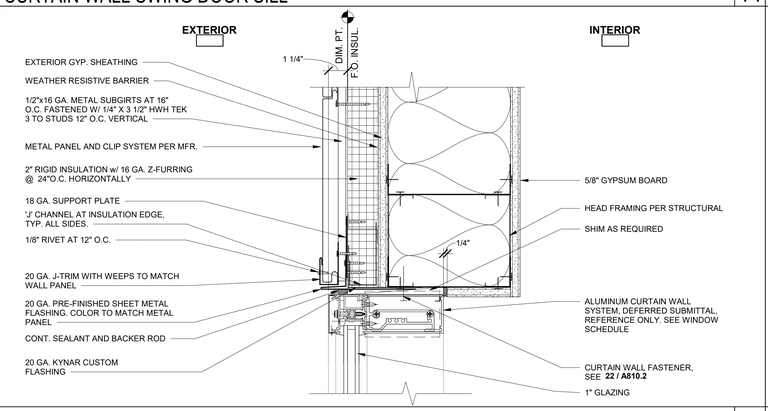

CURTAIN WALL HEAD AT HORIZONTAL METAL PANEL 3" = 1'-0" 15

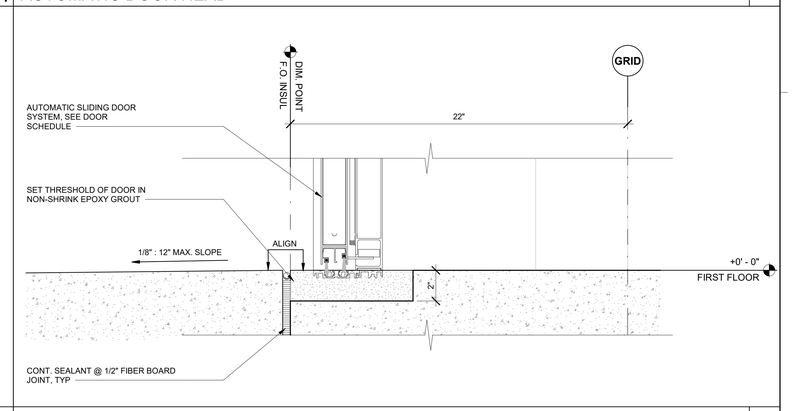

AUTOMATIC DOOR SILL 3" = 1'-0" 5

IDENTIFICATION STAMP
DIV. OF THE STATE ARCHITECT
APP: 02-122821 INC: 2
REVIEWED FOR
SS ☑ FLS ☑ ACS ☑
DATE: 11/20/2025

Teter, llc. expressly reserves its common law copyright and other property rights in these plans. This document, the ideas and designs incorporated herein, as an instrument of professional service, is not to be used in whole or in part, for any other project without prior written authorization.

MARK	DATE	DESCRIPTION
A	11/13/2025	DSA BACKCHECK

LUKE R. THORNTON ★ WASHINGTON ★ C - 29652 ★ REGISTERED ARCHITECT ★ STATE OF CALIFORNIA

TETER, LLP
FRESNO HEADQUARTERS
VISALIA | BAKERSFIELD | MODESTO | SAN LUIS OBISPO
ARCHITECTS ENGINEERS CONNECTED

VISALIA CAMPUS UNIVERSITY CENTER
COLLEGE OF THE SEQUOIAS - INCREMENT 2
915 S. MOONEY BLVD
VISALIA, CALIFORNIA

DRAWING TITLE
EXTERIOR OPENING DETAILS

PROJECT NO.
22-12498

DRAWING
A814.2

PLOT DATE: 11/10/2025 9:02:08 AM

\\tet-file1\Users\tara.chong_TETR\Documents\12498-A-UC_tara.chong.rvt

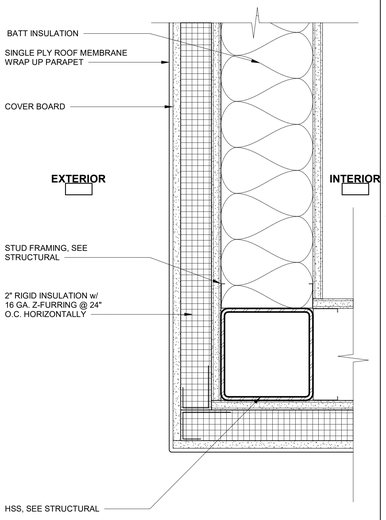

CORNER FRAMING 3" = 1'-0" | 27

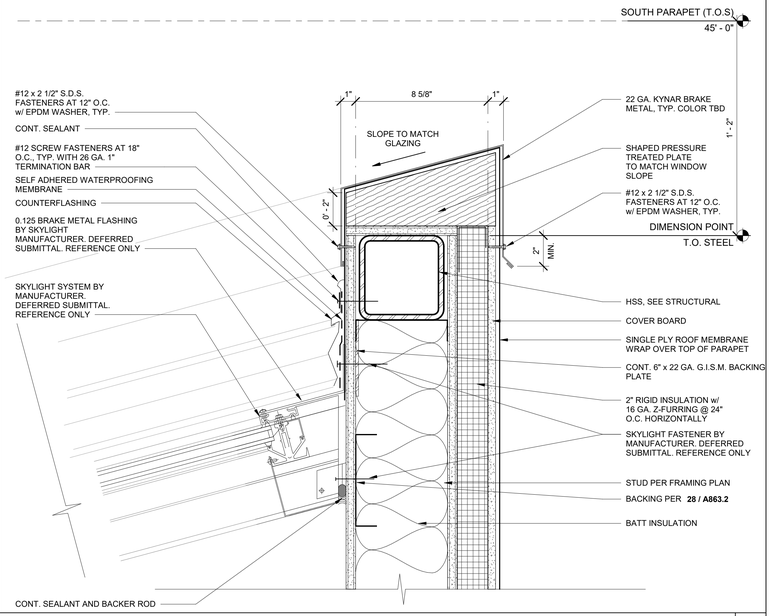

SKYLIGHT - HEAD 3" = 1'-0" | 17

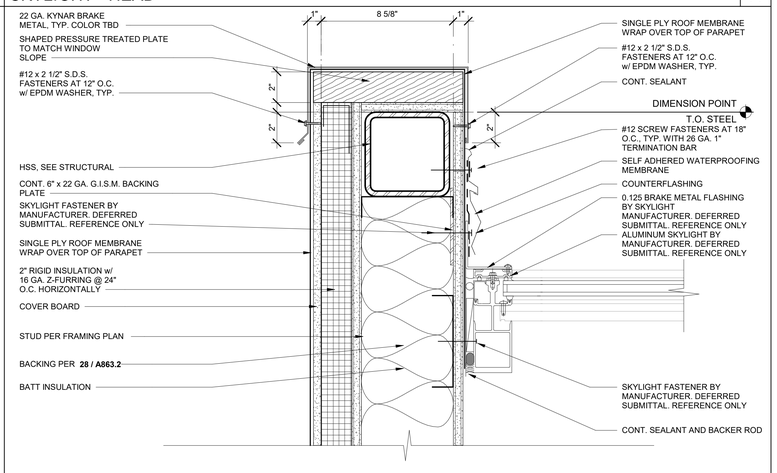

SKYLIGHT - RAKE 3" = 1'-0" | 19

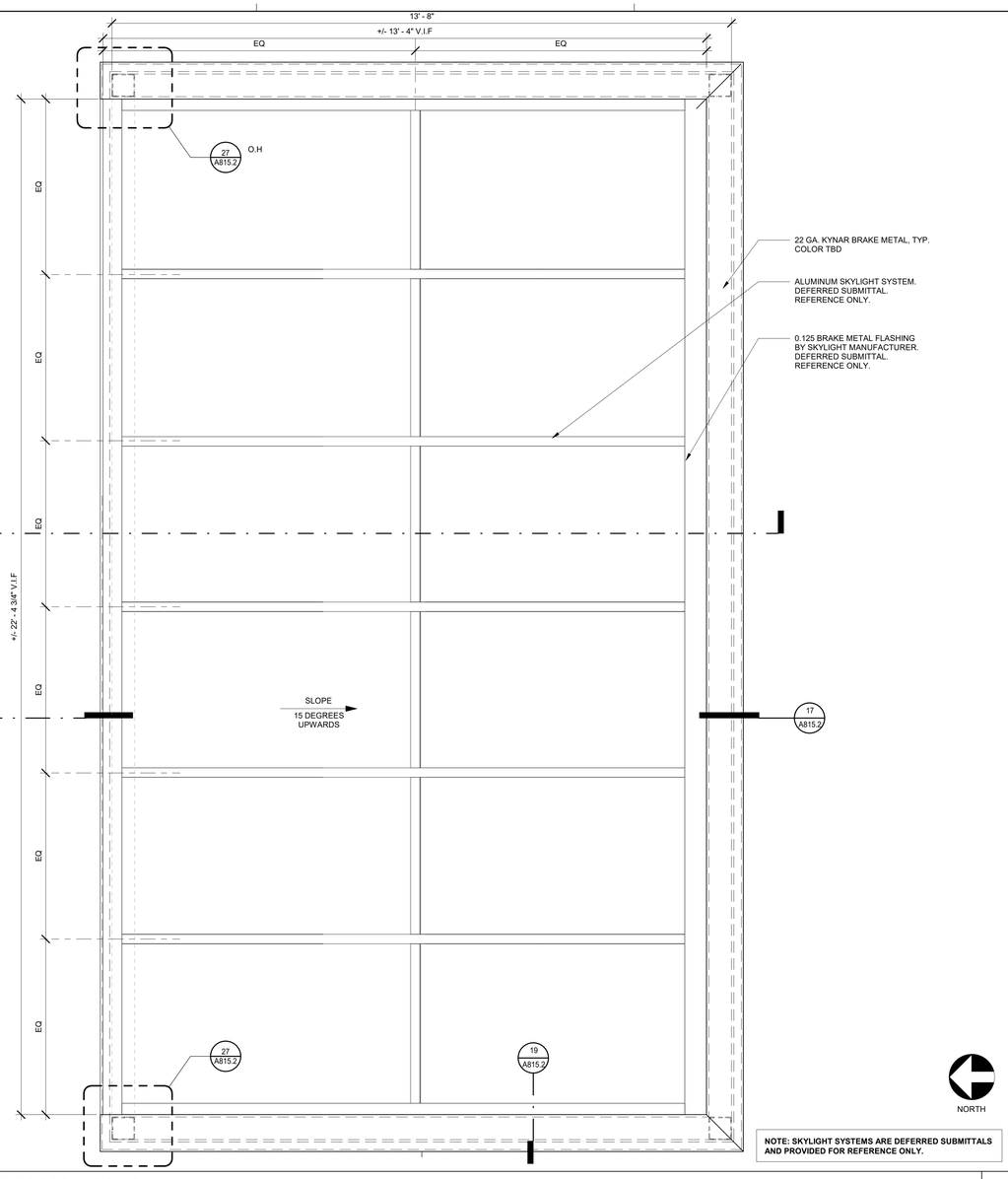

SKYLIGHT - ENLARGED ROOF PLAN 3/4" = 1'-0" | 4

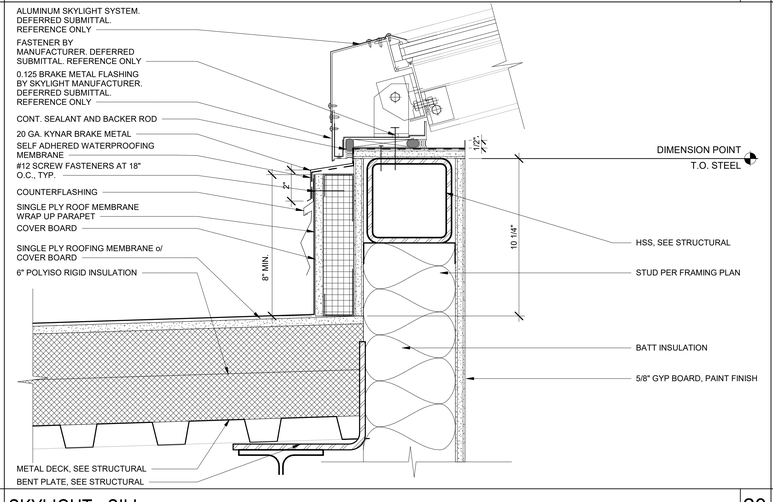

SKYLIGHT - SILL 3" = 1'-0" | 20

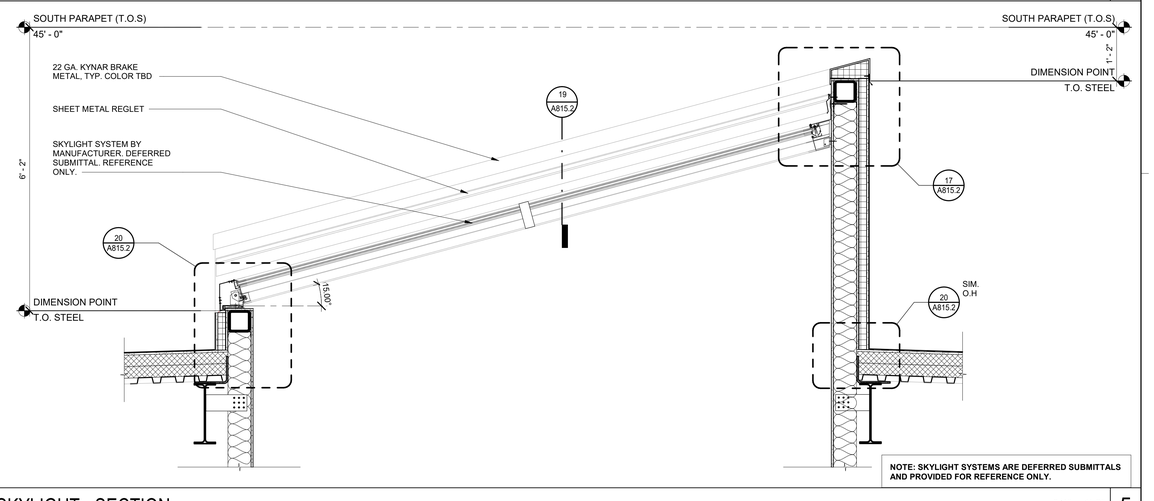

SKYLIGHT - SECTION 3/4" = 1'-0" | 5

PLOT DATE: 11/10/2025 9:02:09 AM

IDENTIFICATION STAMP
DIV. OF THE STATE ARCHITECT
APP: 02-122821 INC: 2
REVIEWED FOR
SS ☑ FLS ☑ ACS ☑
DATE: 11/20/2025

Teter, Inc. expressly reserves its common law copyright and other property rights in these plans. This document, the ideas and designs incorporated herein, as an instrument of professional service, is not to be used in whole or part, for any other project without prior written authorization.

MARK	DATE	DESCRIPTION
A	11/13/2025	DSA BACKCHECK

LICENSED ARCHITECT ★ DONALD C. TETER ★ No. C-12821 ★ STATE OF CALIFORNIA

TETER, INC.
FRESNO HEADQUARTERS
VISALIA | BAKERSFIELD | MODESTO | SAN LUIS OBISPO
ARCHITECTS ENGINEERS CONNECTED

VISALIA CAMPUS UNIVERSITY CENTER
COLLEGE OF THE SEQUOIAS - INCREMENT 2
915 S. MOONEY BLVD
VISALIA, CALIFORNIA

DRAWING TITLE
EXTERIOR OPENING DETAILS

PROJECT NO.
22-12498

DRAWING
A815.2

\\tet-file1\Users\tara.chong_TETR\Documents\12498-A-UC_tara.chong.rvt

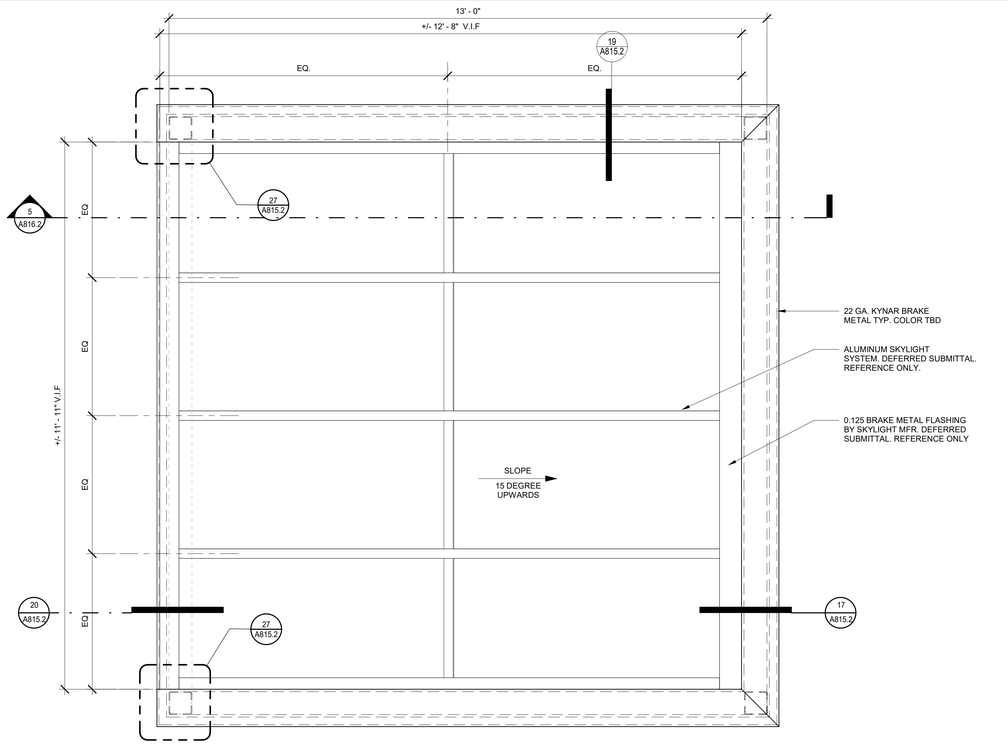

NORTH

NOTE: SKYLIGHT SYSTEMS ARE DEFERRED SUBMITTALS AND PROVIDED FOR REFERENCE ONLY.

SKYLIGHT - ENLARGED PARTIAL ROOF PLAN — 3/4" = 1'-0" — 3

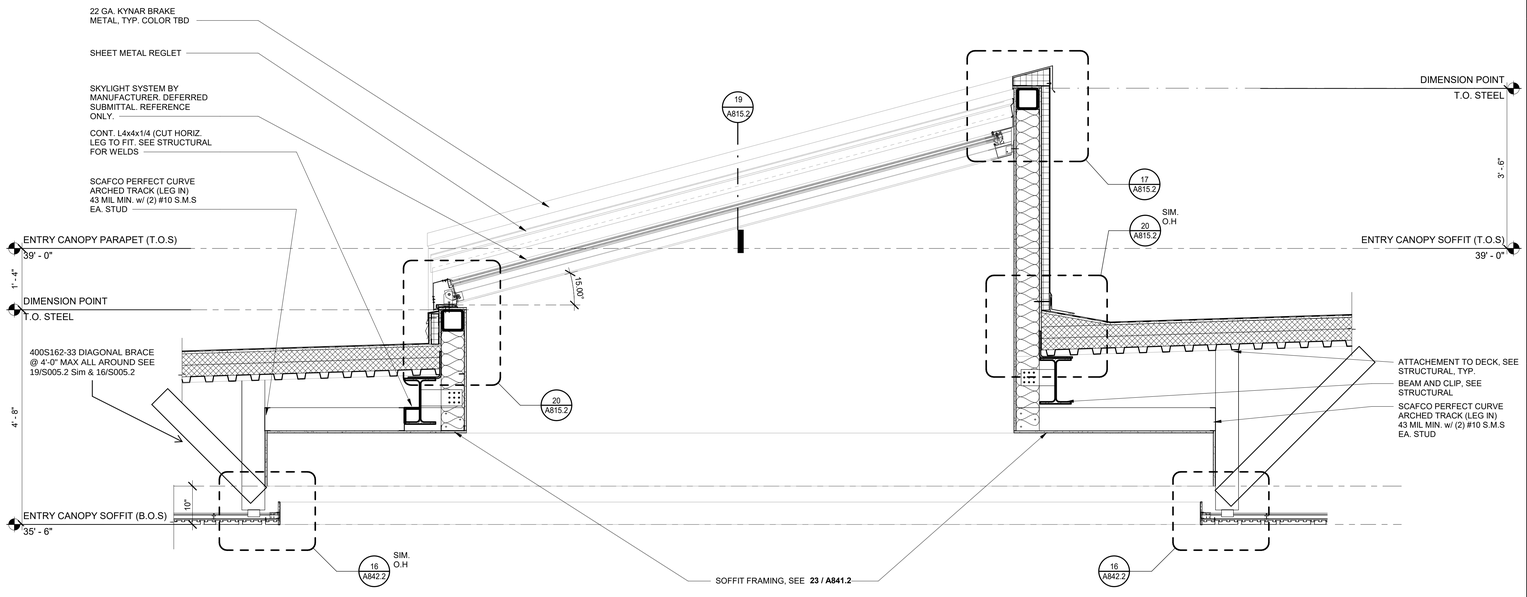

NOTE: SKYLIGHT SYSTEMS ARE DEFERRED SUBMITTALS AND PROVIDED FOR REFERENCE ONLY.

SLOPED GLAZING - SECTION — 3/4" = 1'-0" — 5

IDENTIFICATION STAMP
DIV. OF THE STATE ARCHITECT
APP: 02-122821 INC: 2
REVIEWED FOR
SS ☑ FLS ☑ ACS ☑
DATE: 11/20/2025

Teter, Inc. expressly reserves its common law copyright and other property rights in these plans. This document, the ideas and designs incorporated herein, as an instrument of professional service, is not to be used in whole or part, for any other project without prior written authorization.

MARK	DATE	DESCRIPTION
A	11/13/2025	DSA BACKCHECK

LICENSED ARCHITECT ★ STATE OF CALIFORNIA ★ DAVID WAYNE CHONG ★ C-29403 ★ EXPIRATION 02-29-2028

TETER, INC.
FRESNO HEADQUARTERS
VISALIA | BAKERSFIELD | MODESTO | SAN LUIS OBISPO
ARCHITECTS ENGINEERS CONNECTED

TETER

VISALIA CAMPUS UNIVERSITY CENTER
COLLEGE OF THE SEQUOIAS - INCREMENT 2
915 S. MOONEY BLVD
VISALIA, CALIFORNIA

DRAWING TITLE
EXTERIOR OPENING DETAILS

PROJECT NO.
22-12498

DRAWING
A816.2

PLOT DATE: 11/10/2025 9:02:09 AM

\\tet-file1\Users\tara.chong_TETR\Documents\12498-A-UC_tara.chong.rvt

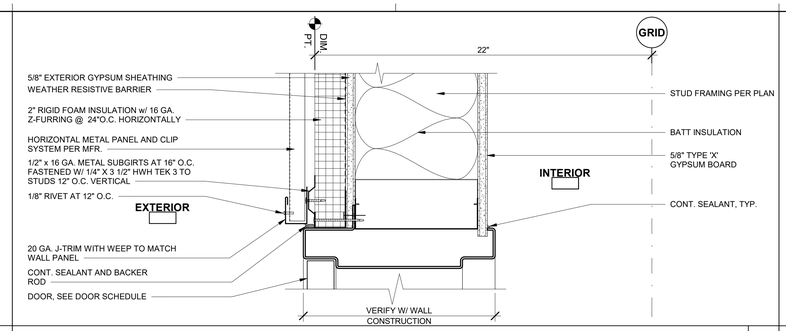

TYP. H.M. DOOR JAMB AT HORIZONTAL METAL PANEL — 3" = 1'-0" — 16

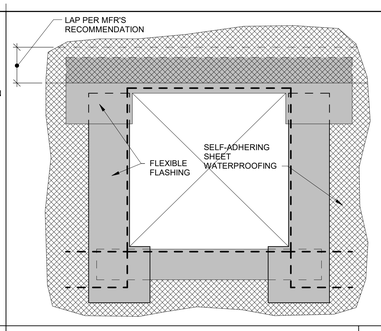

TYP. FLASHING AT OPENINGS — 1" = 1'-0" — 11

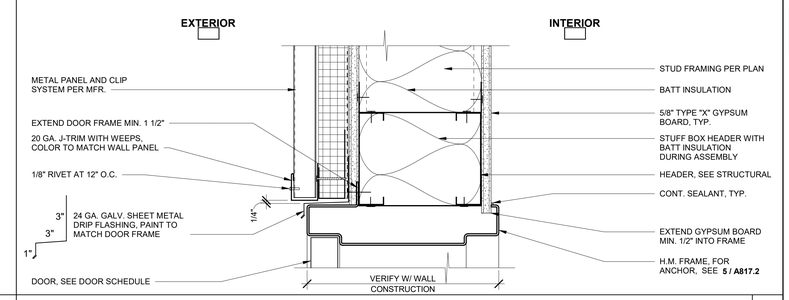

EXTERIOR H.M. DOOR HEAD @ METAL PANEL — 3" = 1'-0" — 1

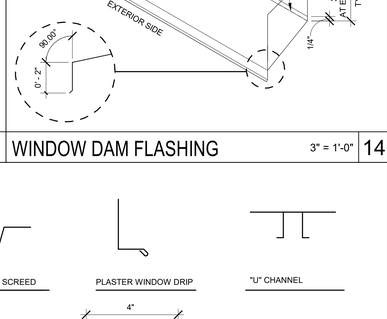

FLASHING HEAD CONDITION — 1 1/2" = 1'-0" — 12

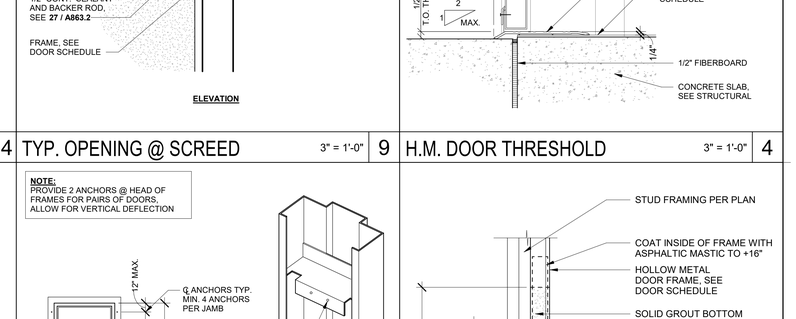

EXTERIOR H.M. DOOR JAMB @ CEMENT PLASTER — 3" = 1'-0" — 2

FLASHING SILL CONDITION — 1 1/2" = 1'-0" — 13

TYP. H.M. DOOR JAMB AT VERTICAL METAL PANEL — 3" = 1'-0" — 3

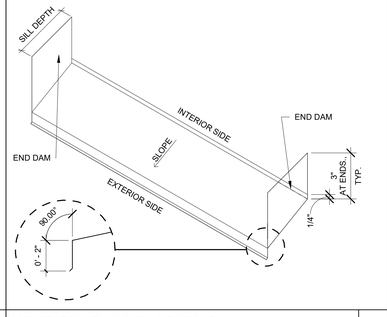

WINDOW DAM FLASHING — 3" = 1'-0" — 14

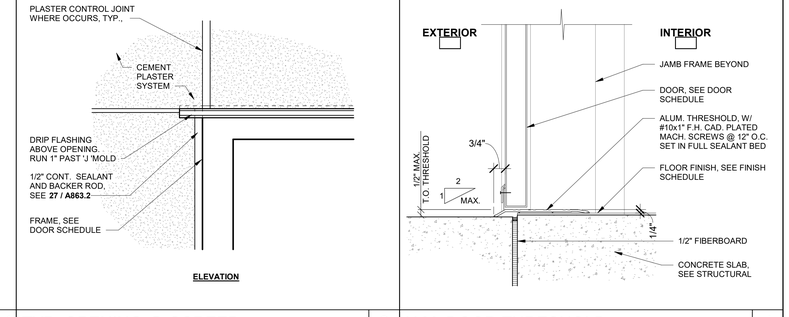

TYP. OPENING @ SCREED — 3" = 1'-0" — 9

H.M. DOOR THRESHOLD — 3" = 1'-0" — 4

NOTES:
ALL PLASTER ACCESSORY SHAPES ARE TO BE MADE FROM 24 GAGE MINIMUM GALVANIZED SHEET METAL.
ALL PLASTER 'J' MOLD/CASING BEADS USED AT THE HEAD OF DOORS, WINDOWS, & SIMILAR OPENINGS SHALL HAVE WEEP HOLES TO PERMIT DRAINAGE OF WATER.

PLASTER ACCESSORIES, TYP. — 1" = 1'-0" — 15

NOTE:
PROVIDE 2 ANCHORS @ HEAD OF FRAMES FOR PAIRS OF DOORS, ALLOW FOR VERTICAL DEFLECTION

H.M. FRAME ANCHOR (MTL. STUD) — 1 1/2" = 1'-0" — 10

EXTERIOR H.M. FRAME BASE — 1 1/2" = 1'-0" — 5

PLOT DATE: 11/10/2025 9:02:17 AM

IDENTIFICATION STAMP
DIV. OF THE STATE ARCHITECT
APP: 02-122821 INC: 2
REVIEWED FOR
SS ☑ FLS ☑ ACS ☑
DATE: 11/20/2025

Teter, Inc. expressly reserves its common law copyright and other property rights in these plans. This document, the ideas and designs incorporated herein, as an instrument of professional service, is not to be used in whole or in part, for any other project without prior written authorization.

MARK	DATE	DESCRIPTION
A	11/13/2025	DSA BACKCHECK

LICENSED ARCHITECT ★ STATE OF CALIFORNIA ★ CHRISTOPHER J. CARLSON ★ C-29422

TETER, INC.
FRESNO HEADQUARTERS
VISALIA I BAKERSFIELD I MODESTO I SAN LUIS OBISPO
ARCHITECTS ENGINEERS CONNECTED
TETER

VISALIA CAMPUS UNIVERSITY CENTER
COLLEGE OF THE SEQUOIAS - INCREMENT 2
915 S. MOONEY BLVD
VISALIA, CALIFORNIA

PROJECT NO.
22-12498

DRAWING TITLE
EXTERIOR OPENING DETAILS

DRAWING
A817.2

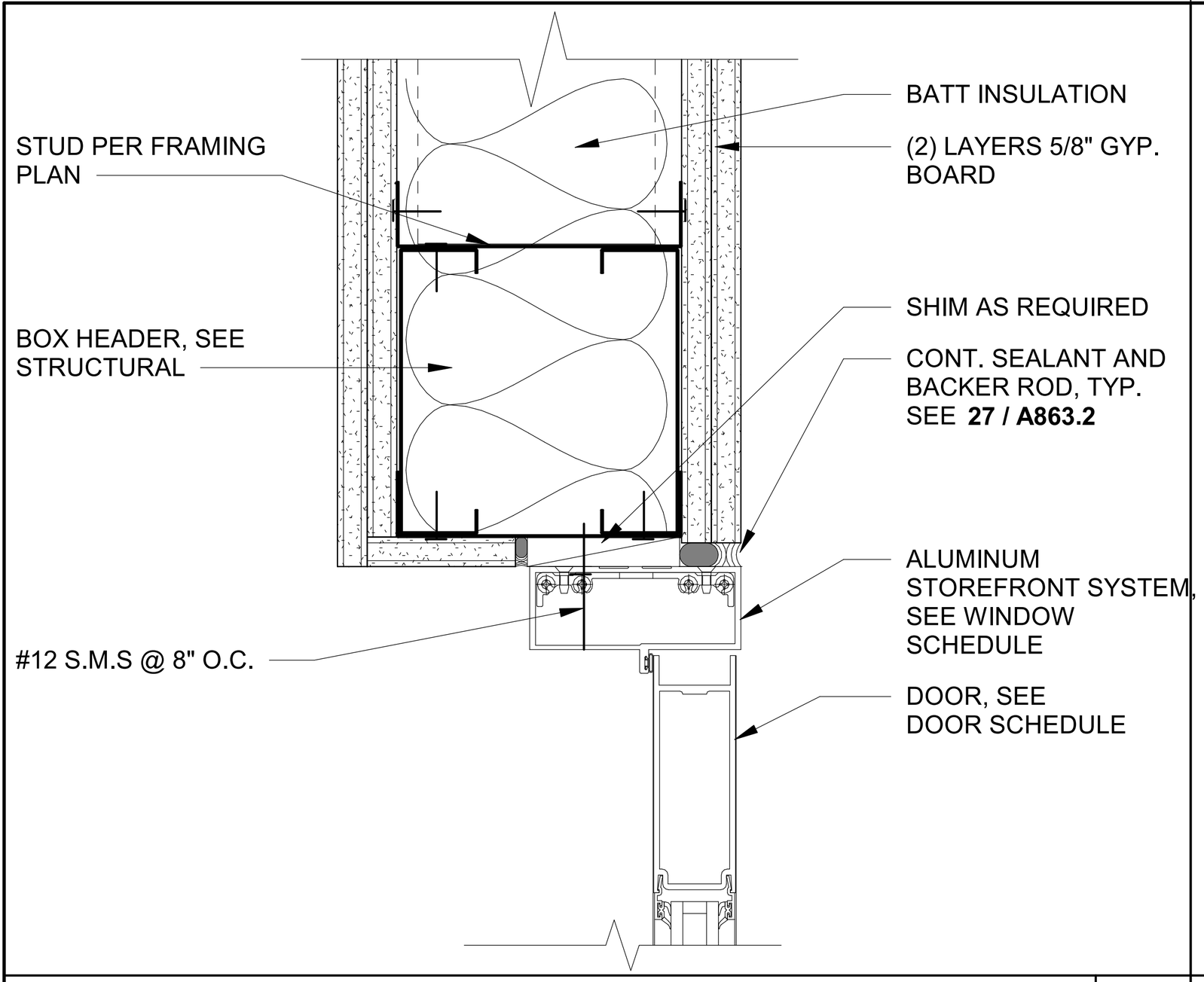

INT. ALUM. STOREFRONT HEAD 3" = 1'-0" 26

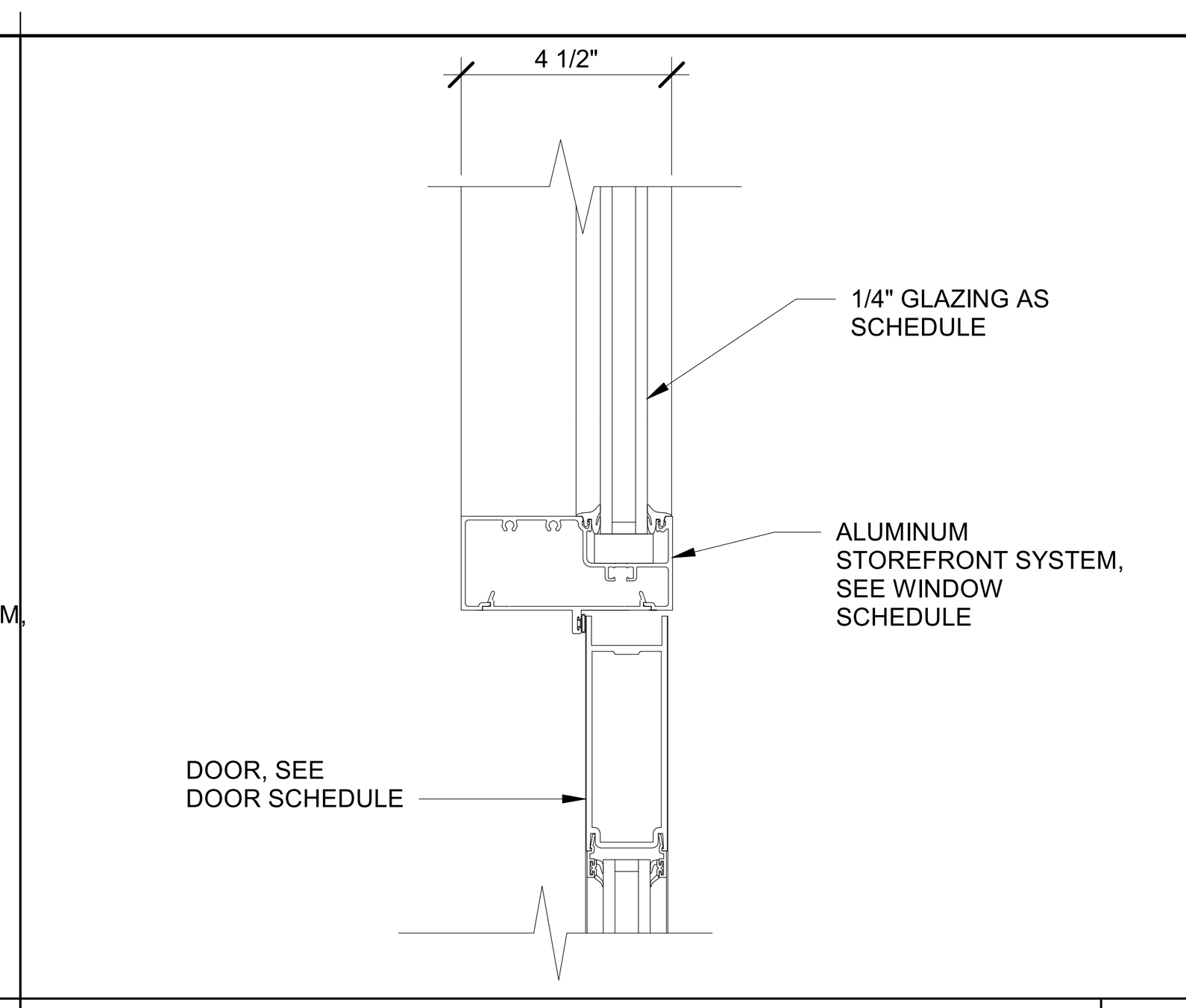

INT. ALUM. STOREFRONT HEAD 3" = 1'-0" 21

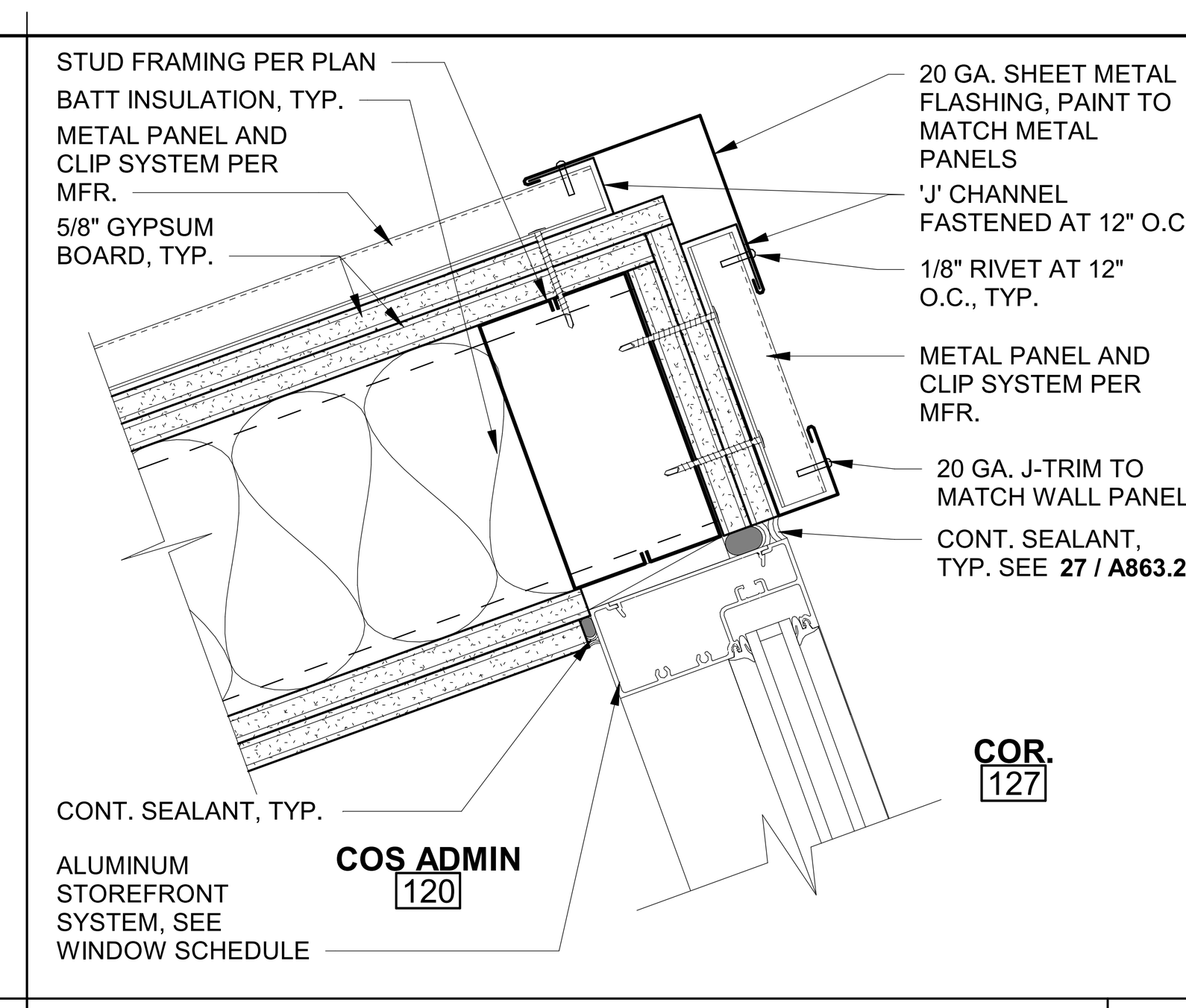

INT. STOREFRONT JAMB AT METAL PANEL 3" = 1'-0" 16

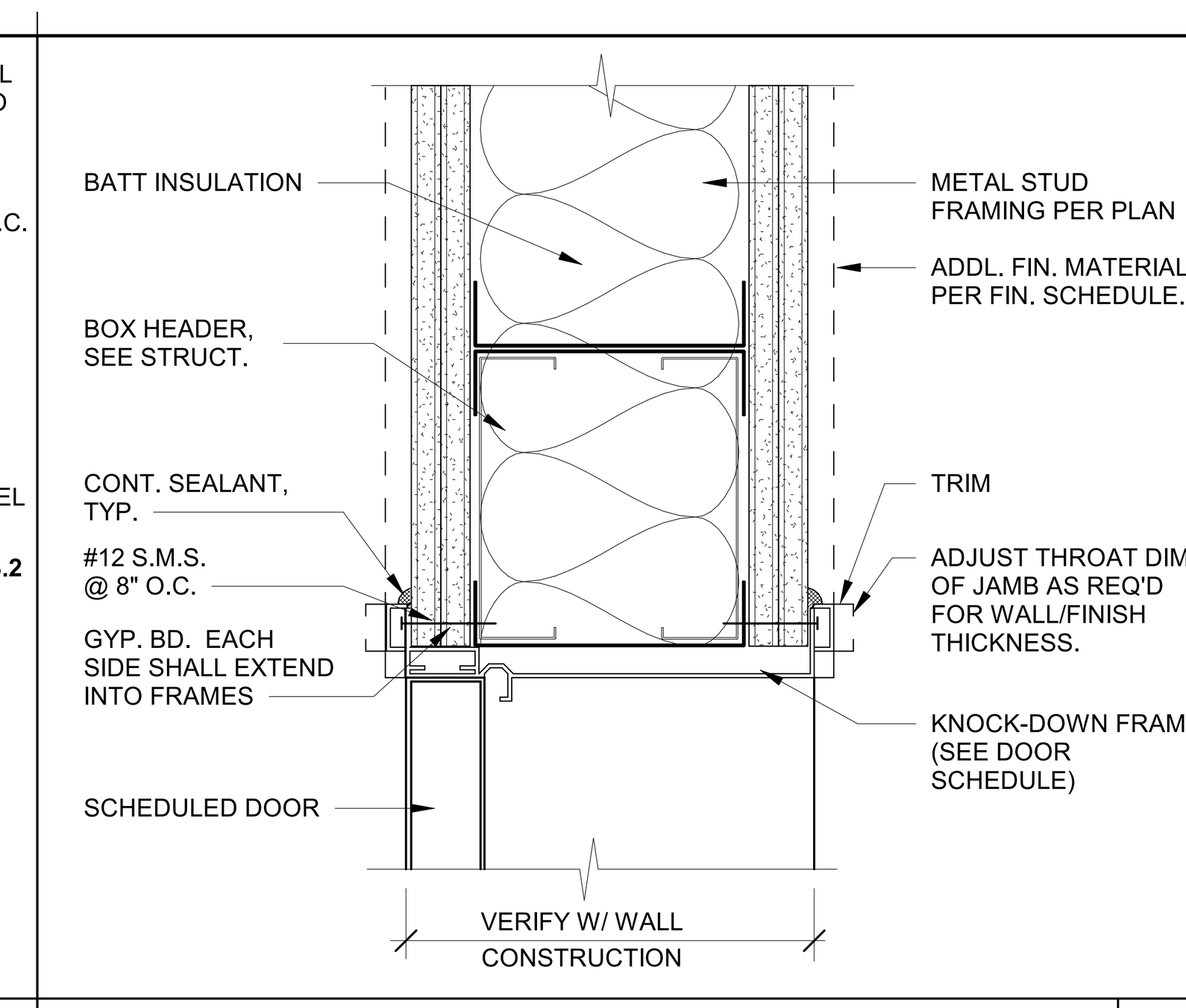

DOOR HEAD INTERIOR KD DETAIL 3" = 1'-0" 11

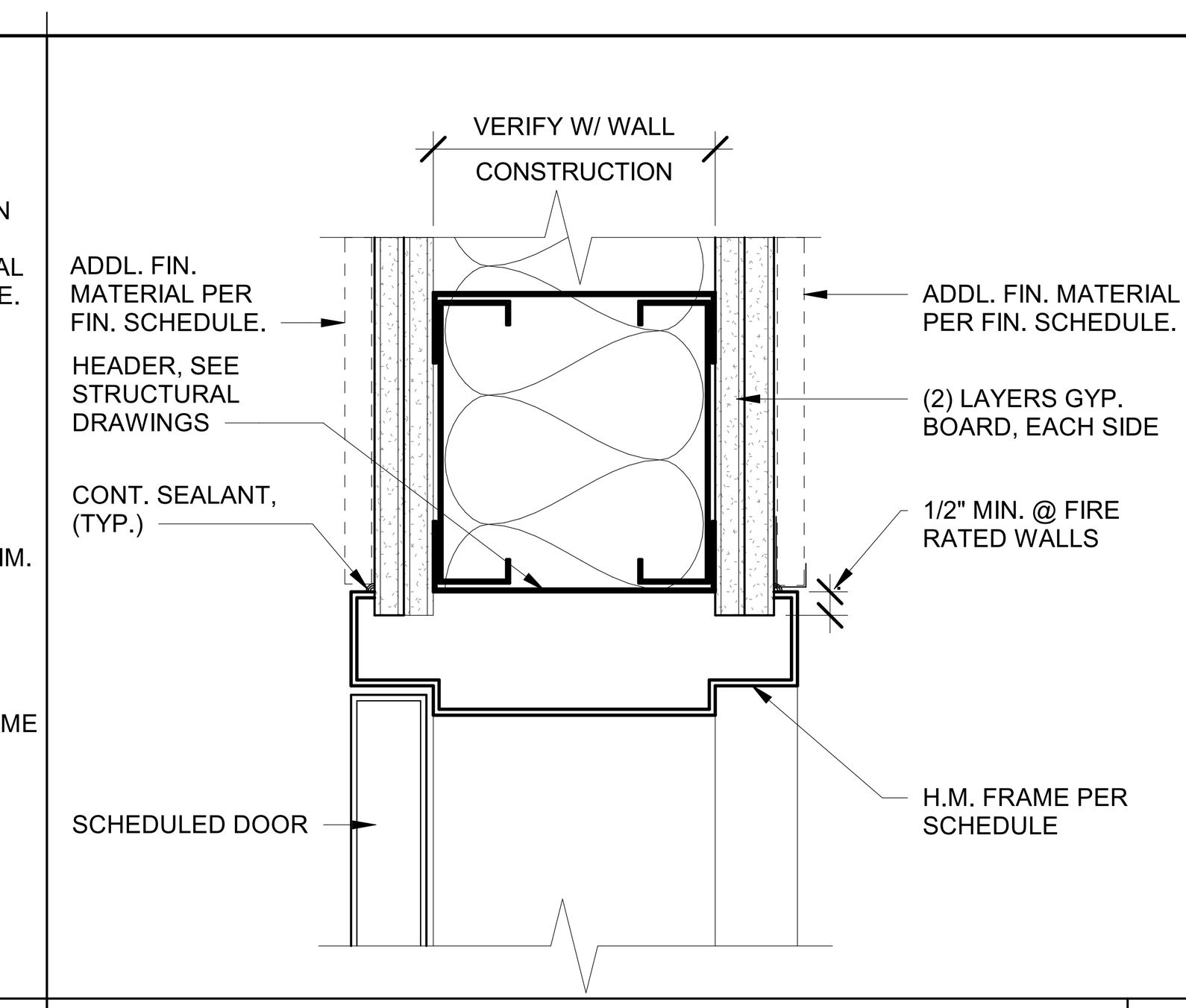

DOOR HEAD INTERIOR H.M. 3" = 1'-0" 6

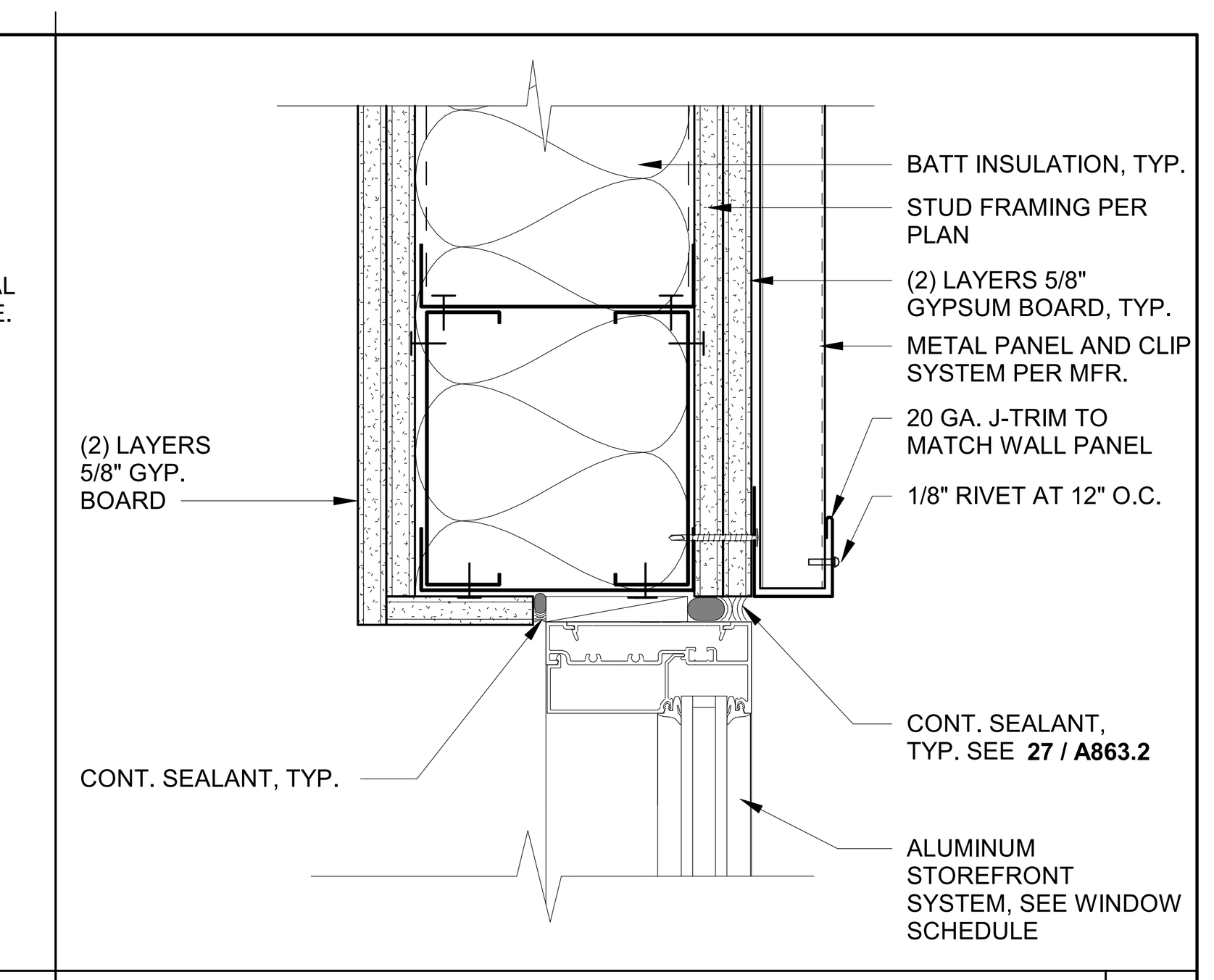

INT. STOR. HEAD AT METAL PANEL 3" = 1'-0" 1

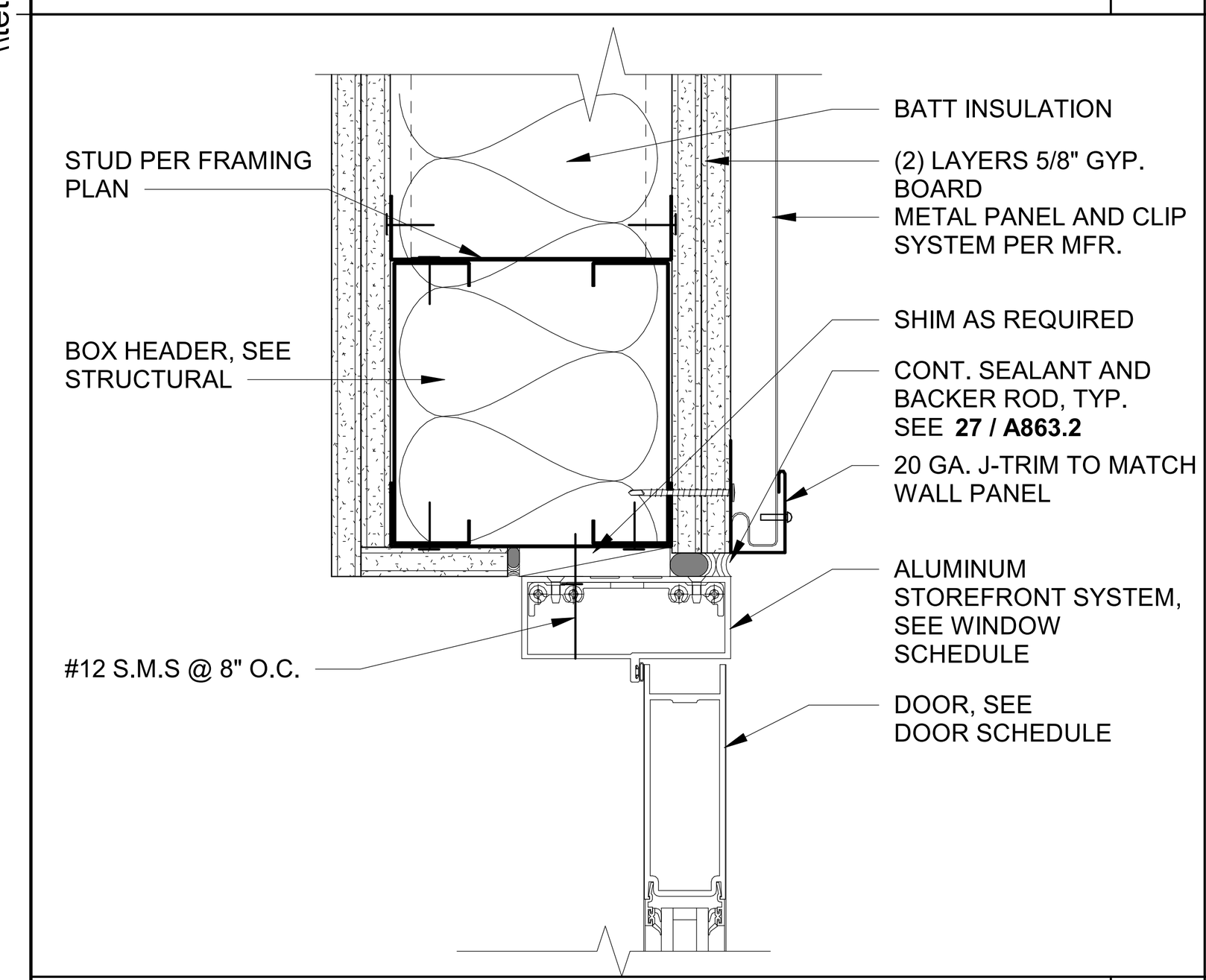

INT. ALUM. STOR. HEAD AT METAL PANEL 3" = 1'-0" 27

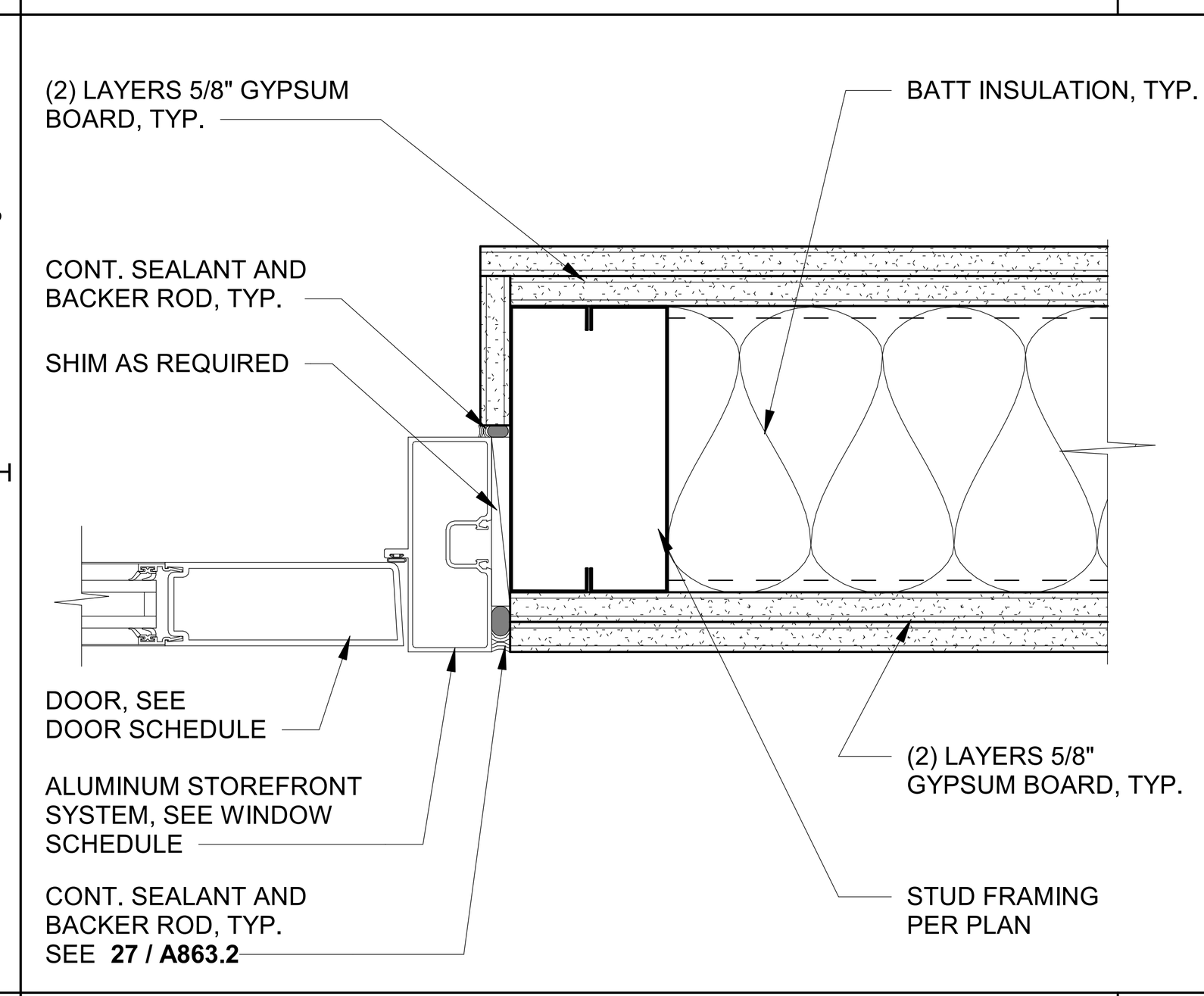

INT.ALUM. STOREFRONT JAMB 3" = 1'-0" 22

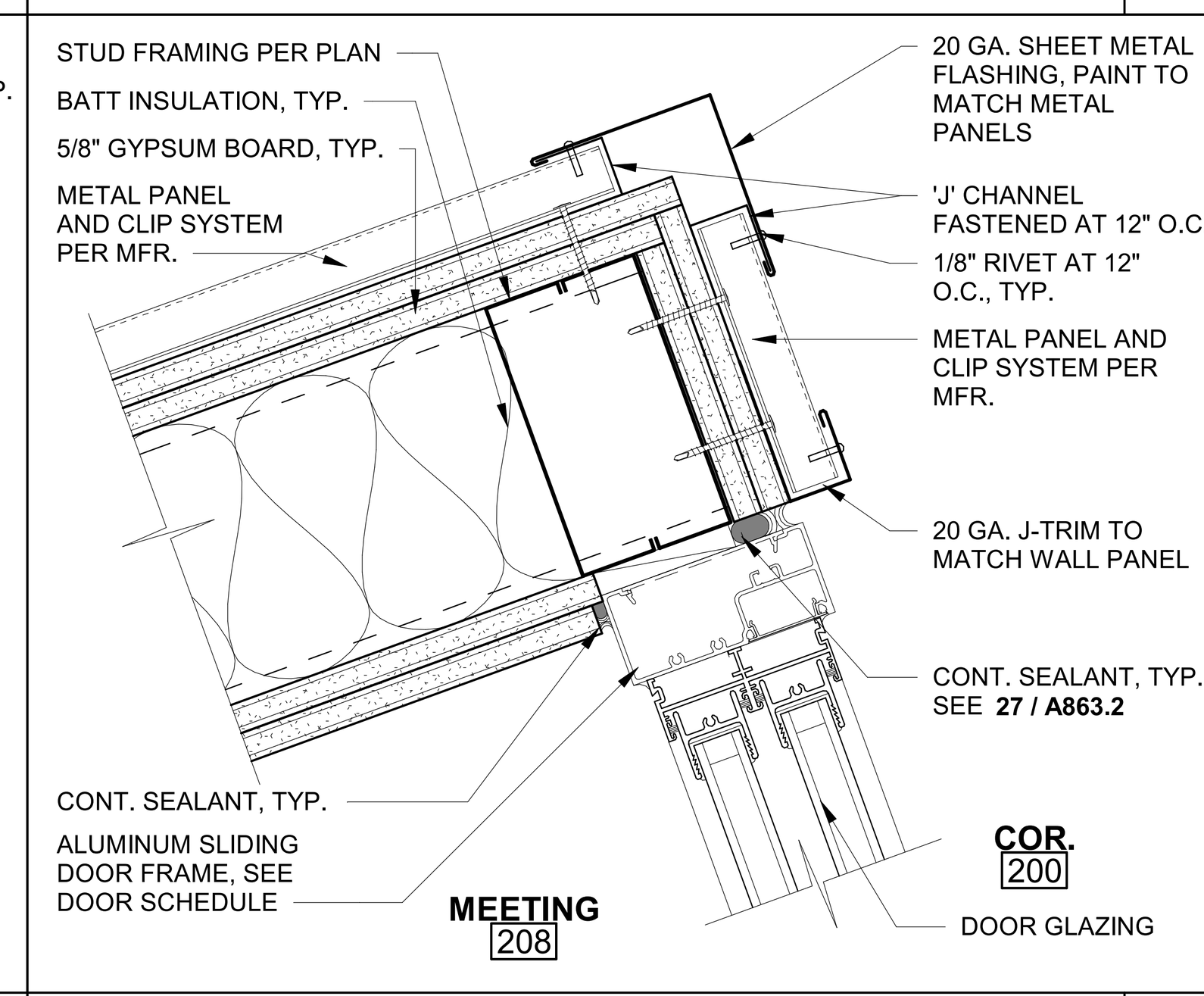

INT. SLIDING DOOR JAMB AT METAL PANEL 3" = 1'-0" 17

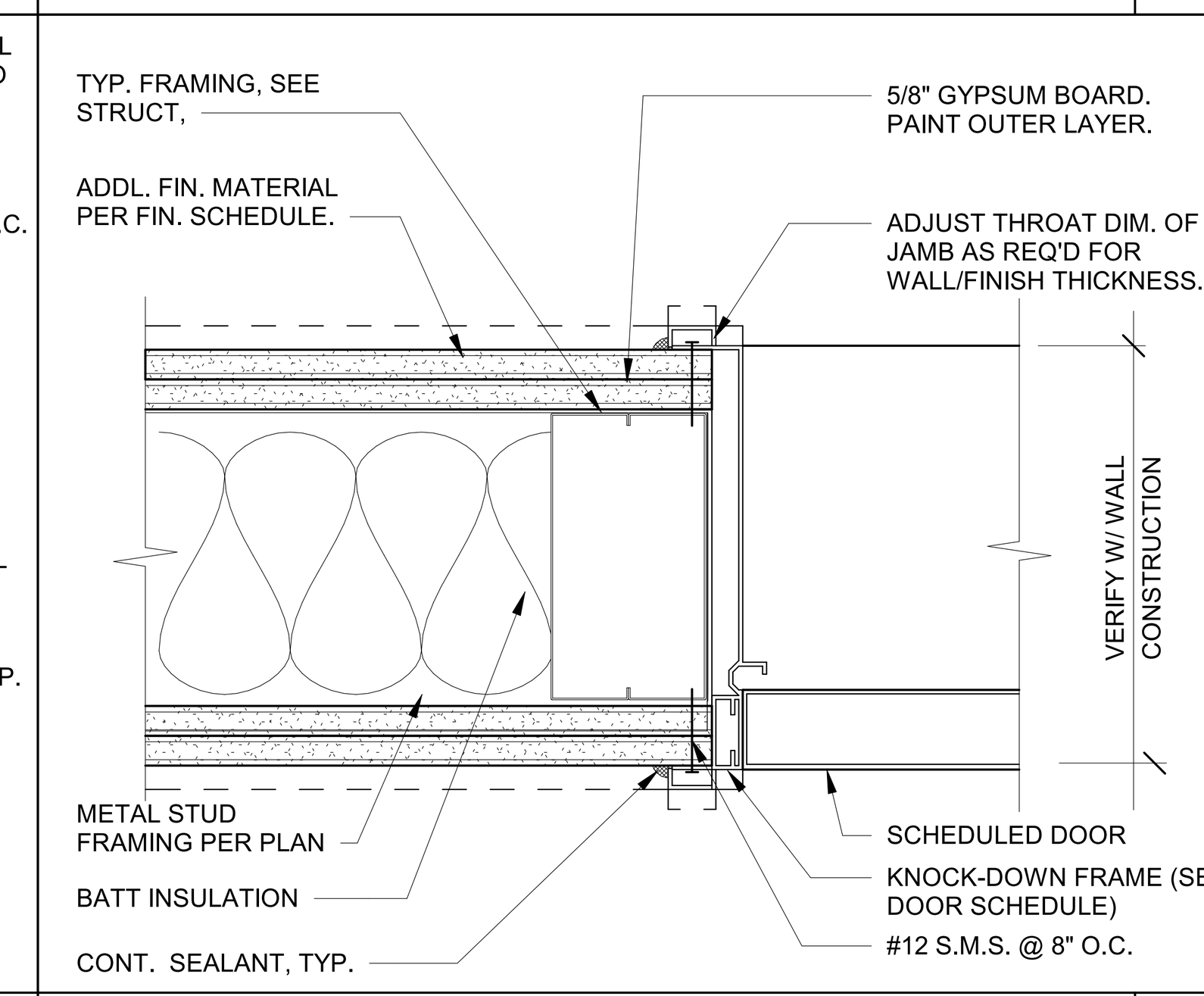

DOOR JAMB INTERIOR KD 3" = 1'-0" 12

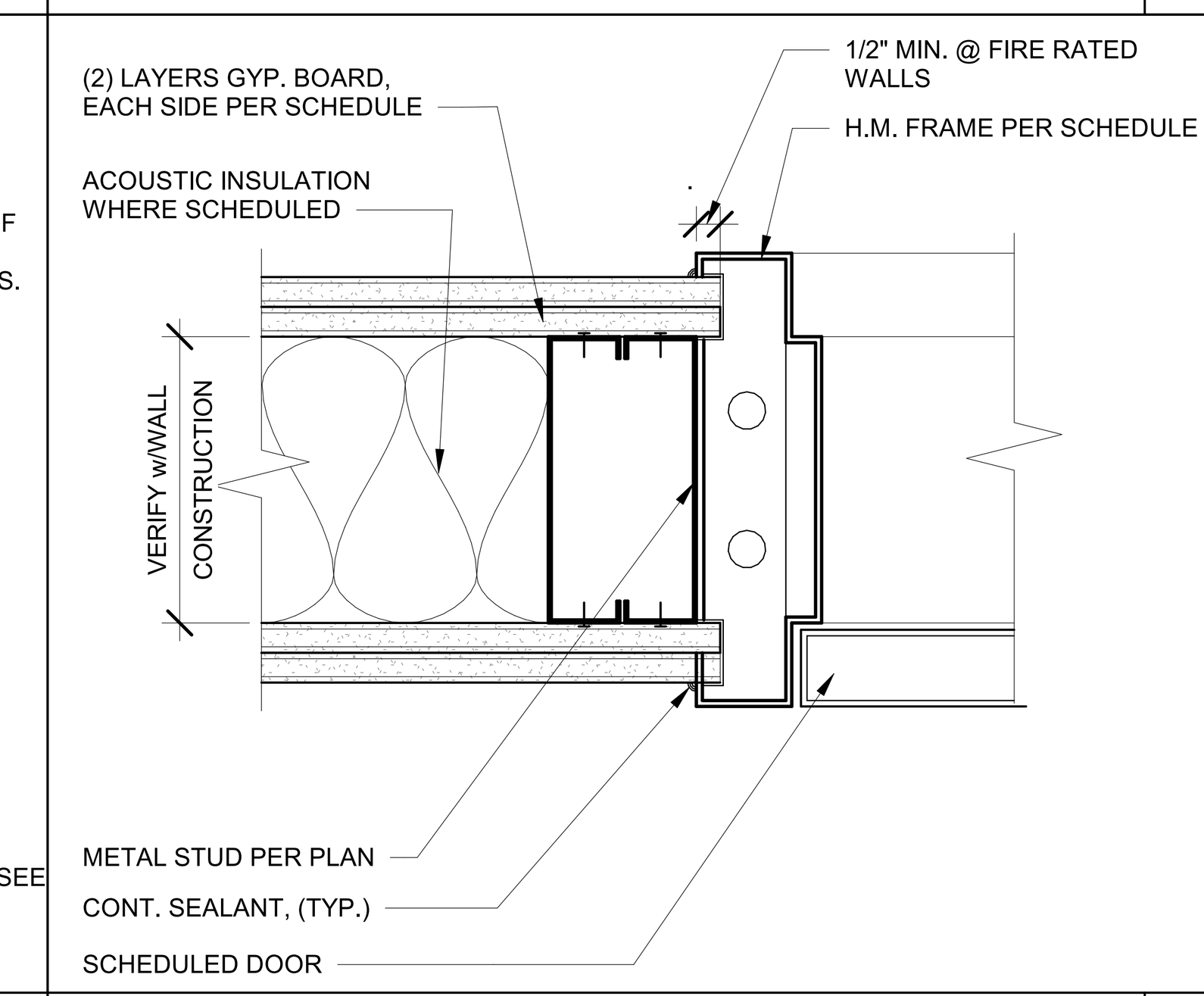

DOOR JAMB INTERIOR H.M. 3" = 1'-0" 7

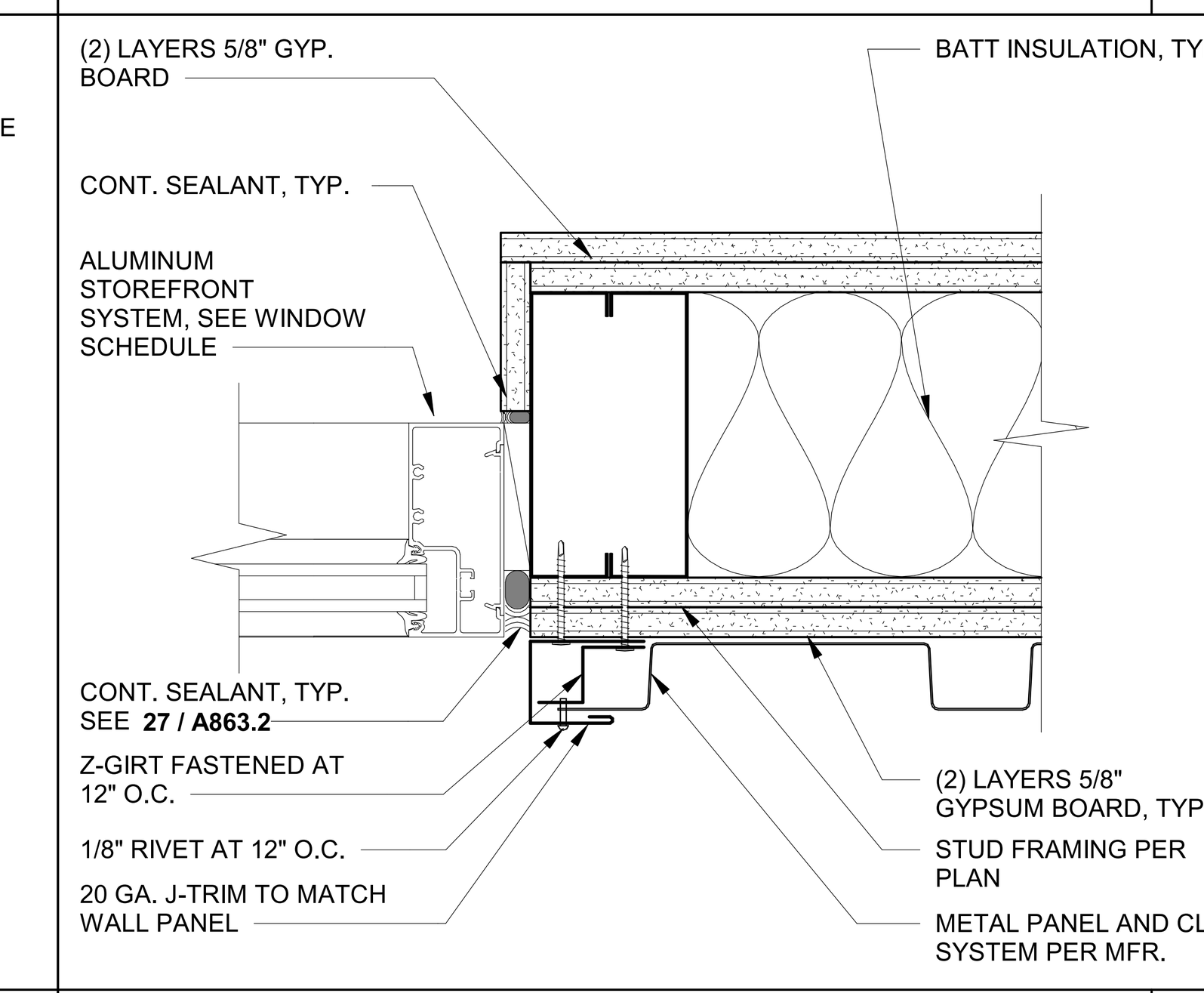

INT. STOR. JAMB AT METAL PANEL 3" = 1'-0" 2

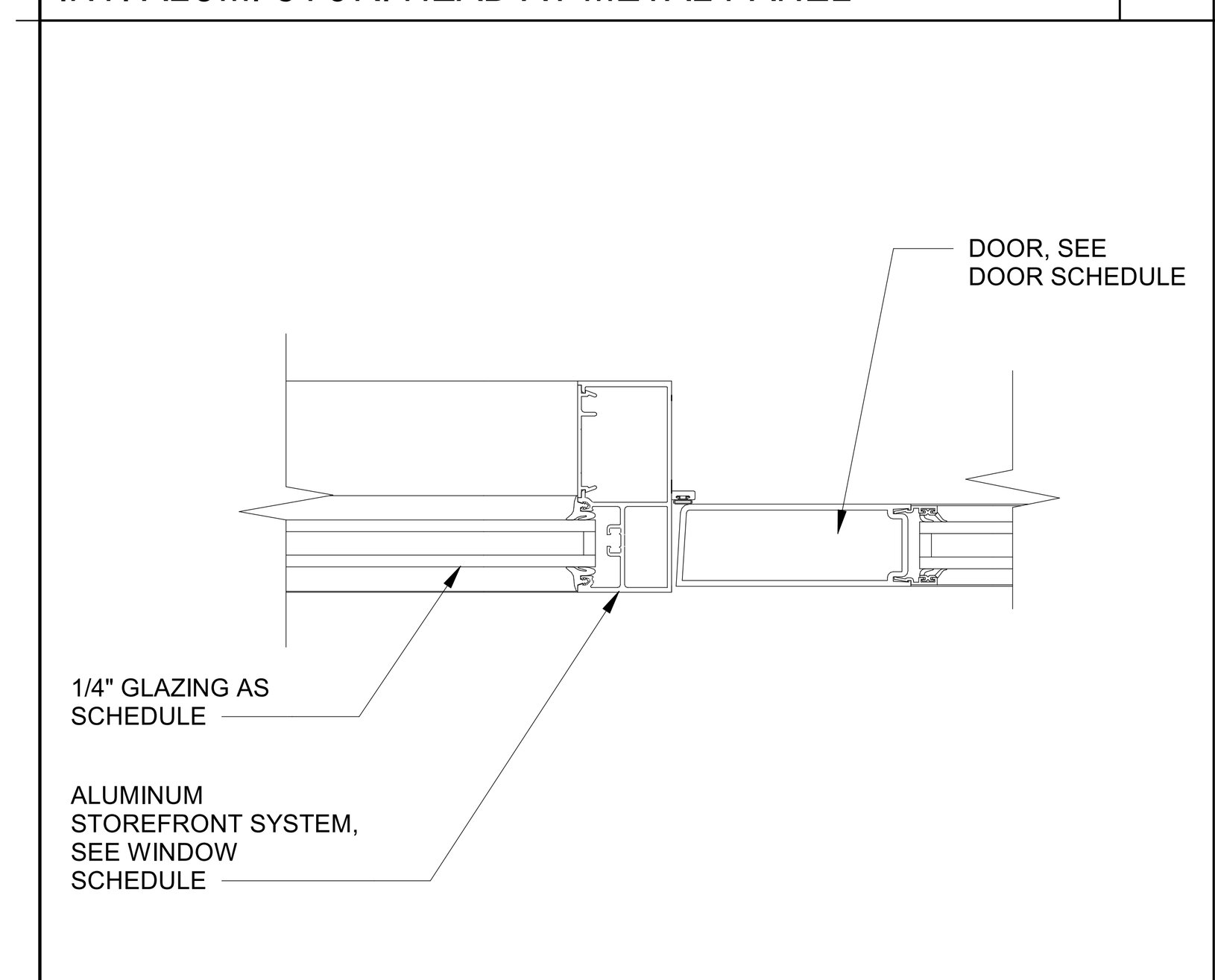

STOREFRONT DOOR AT MULLION 3" = 1'-0" 28

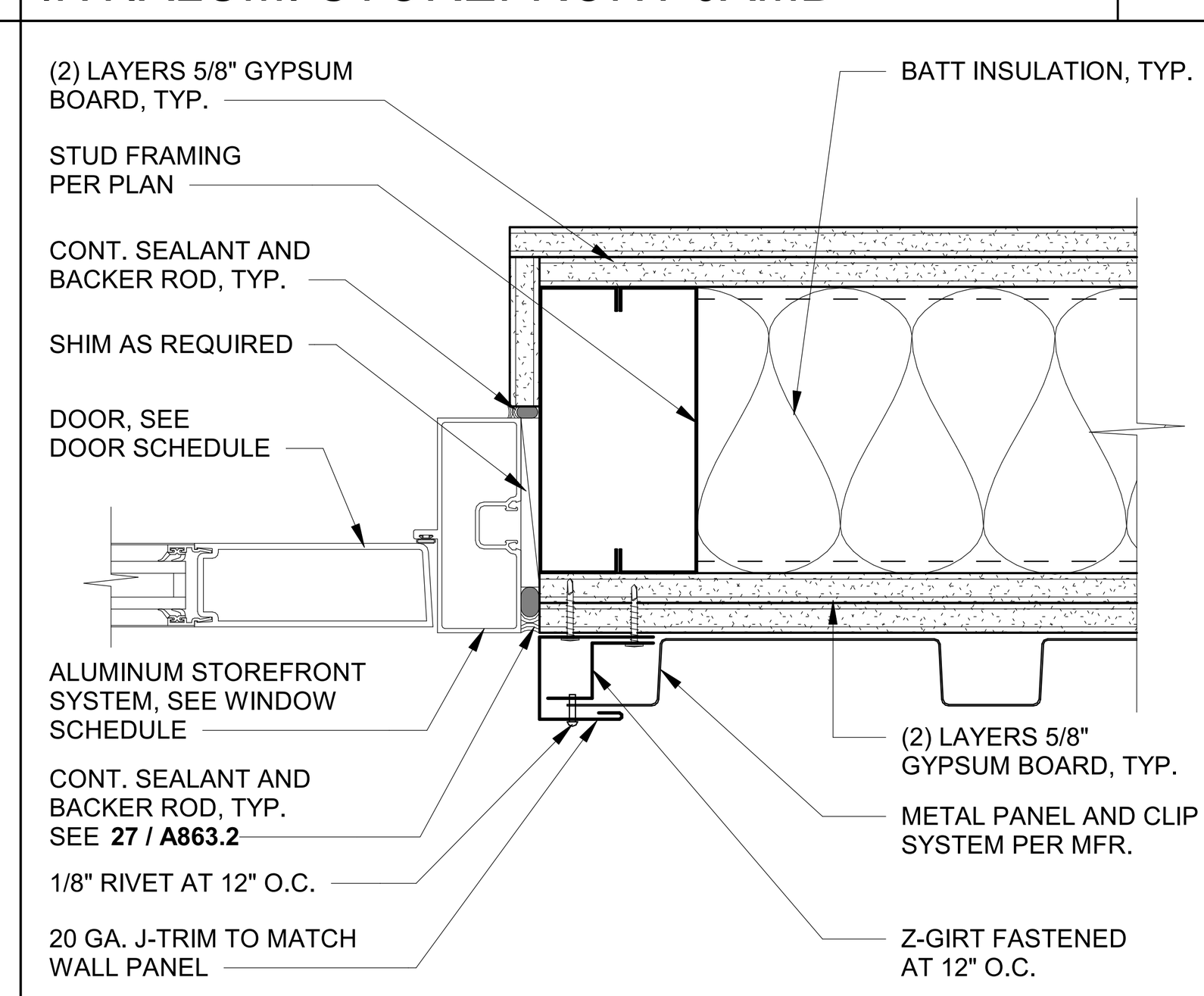

INT. STOR. JAMB AT METAL PANEL 3" = 1'-0" 23

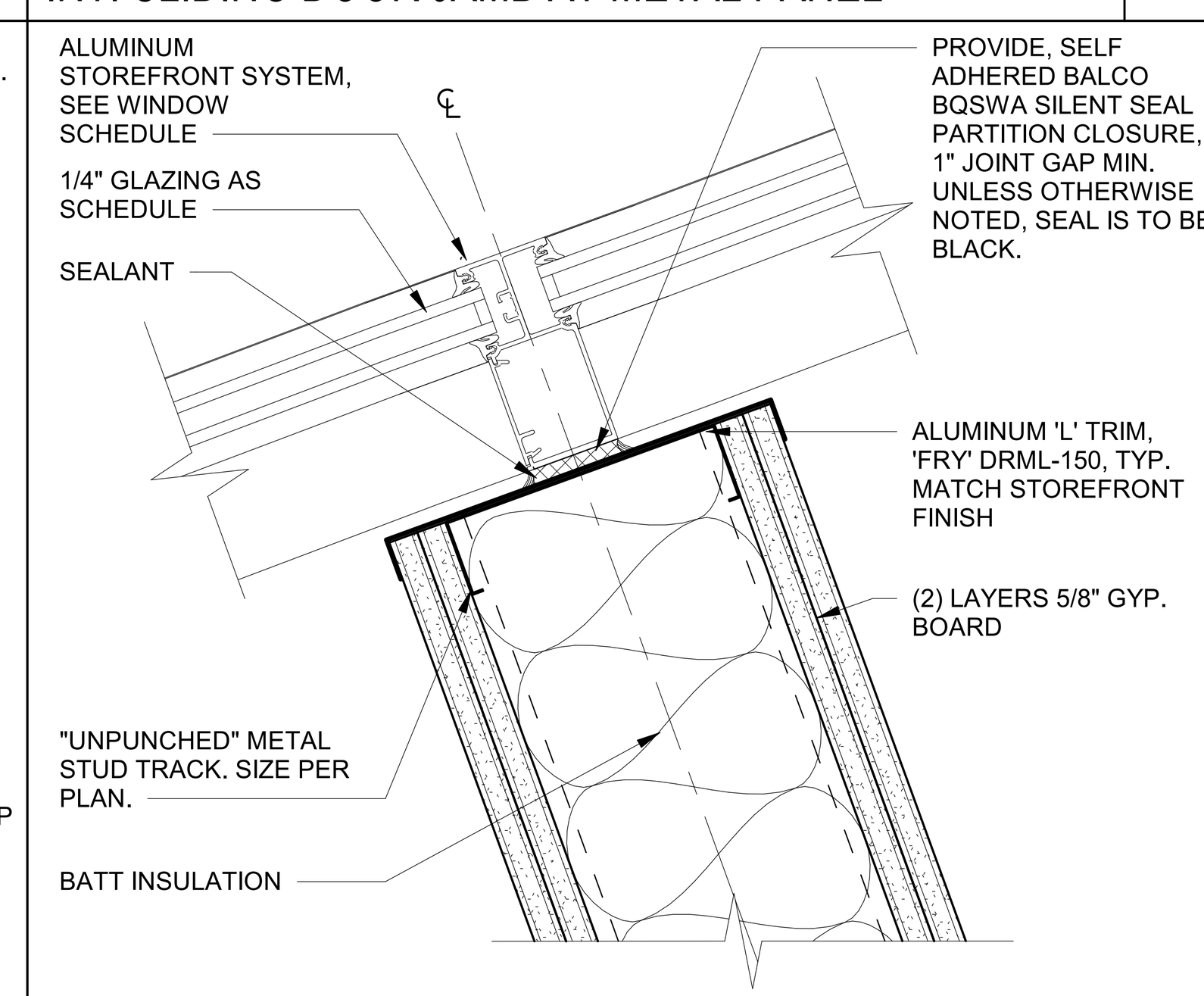

PARTITION WALL TO STOREFRONT 3" = 1'-0" 18

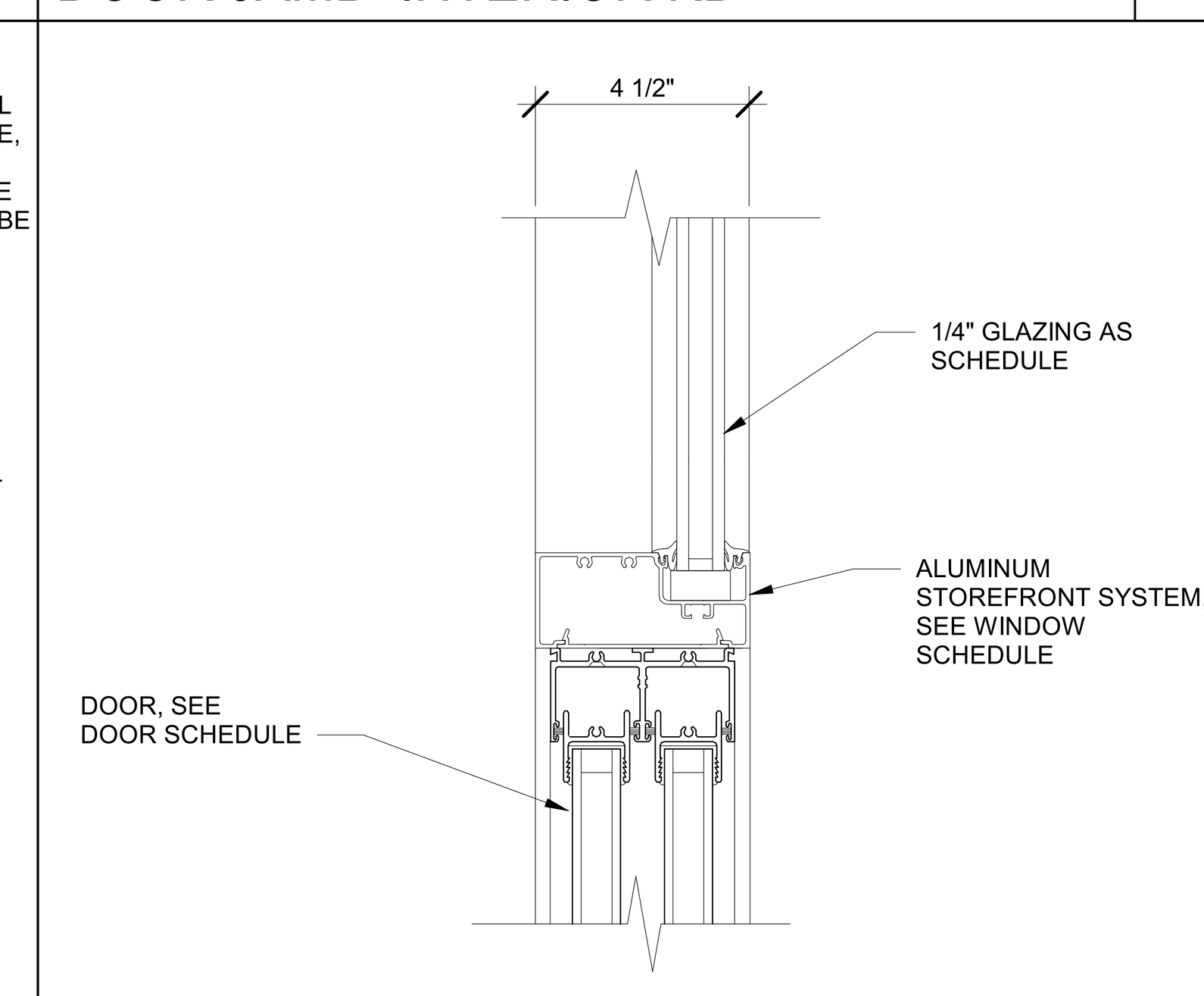

INT. SLIDING DOOR HEAD AT STOREFRONT 3" = 1'-0" 13

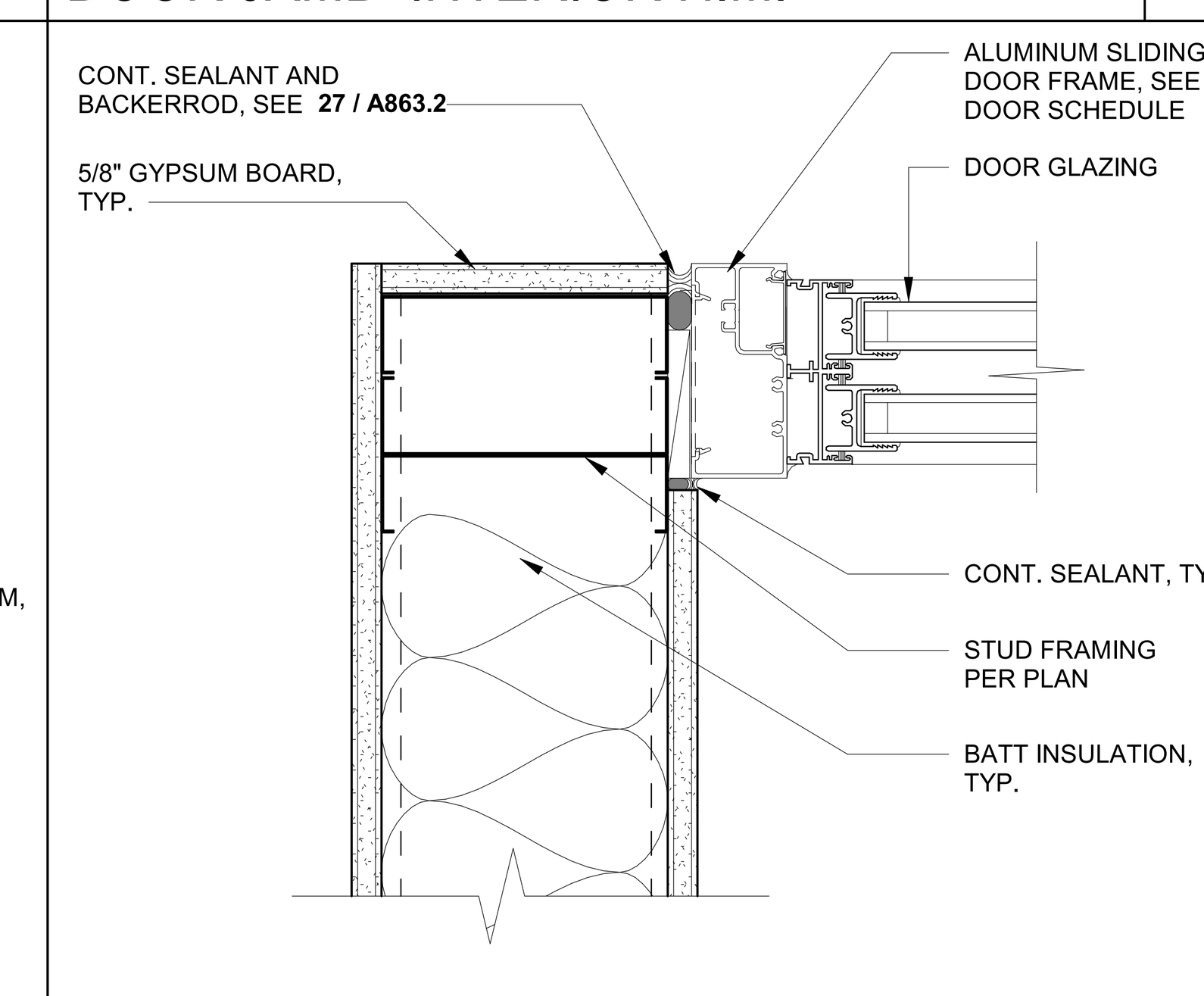

INT. SLIDING DOOR JAMB AT WALL 3" = 1'-0" 8

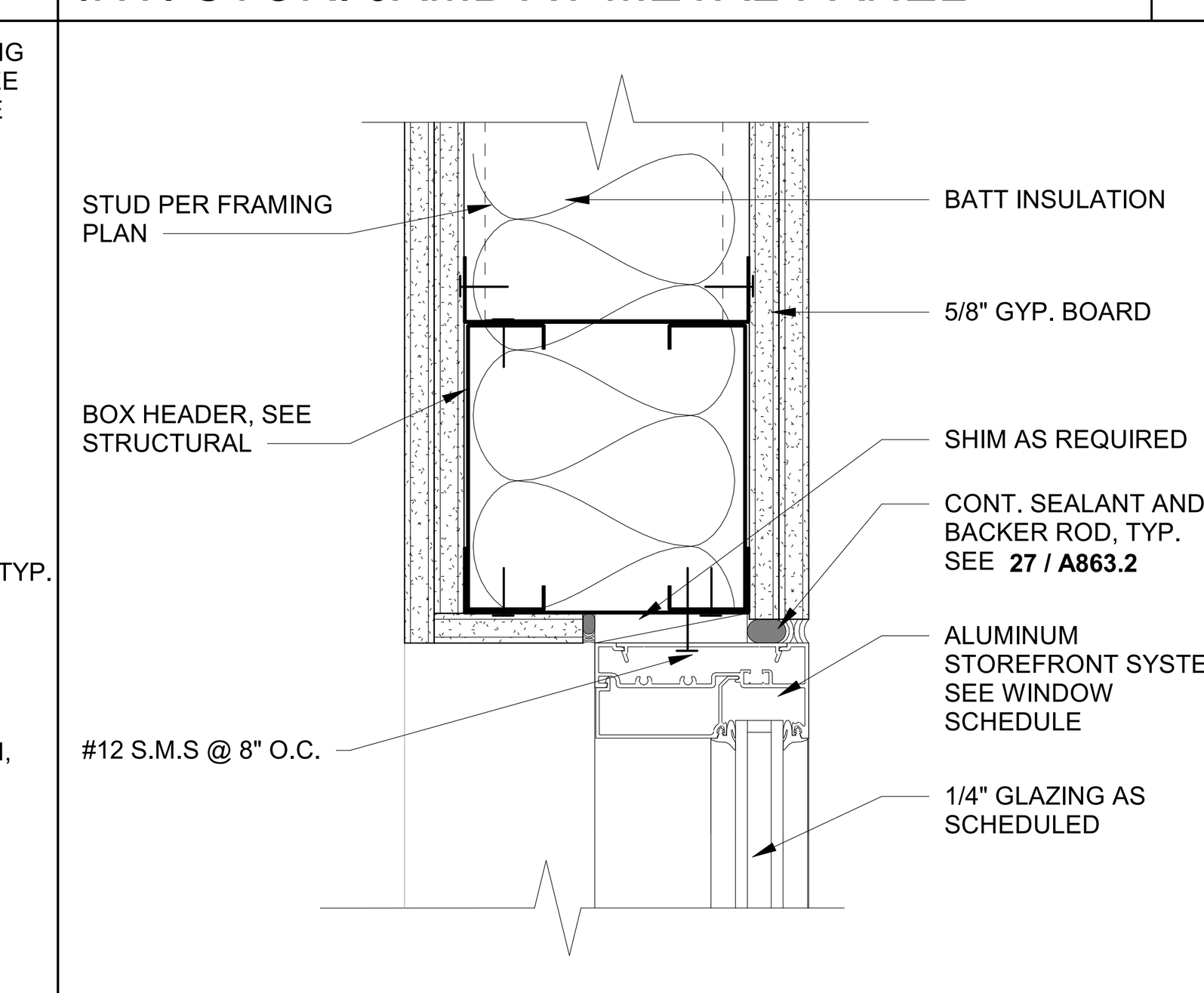

INT. ALUM. STOREFRONT HEAD 3" = 1'-0" 3

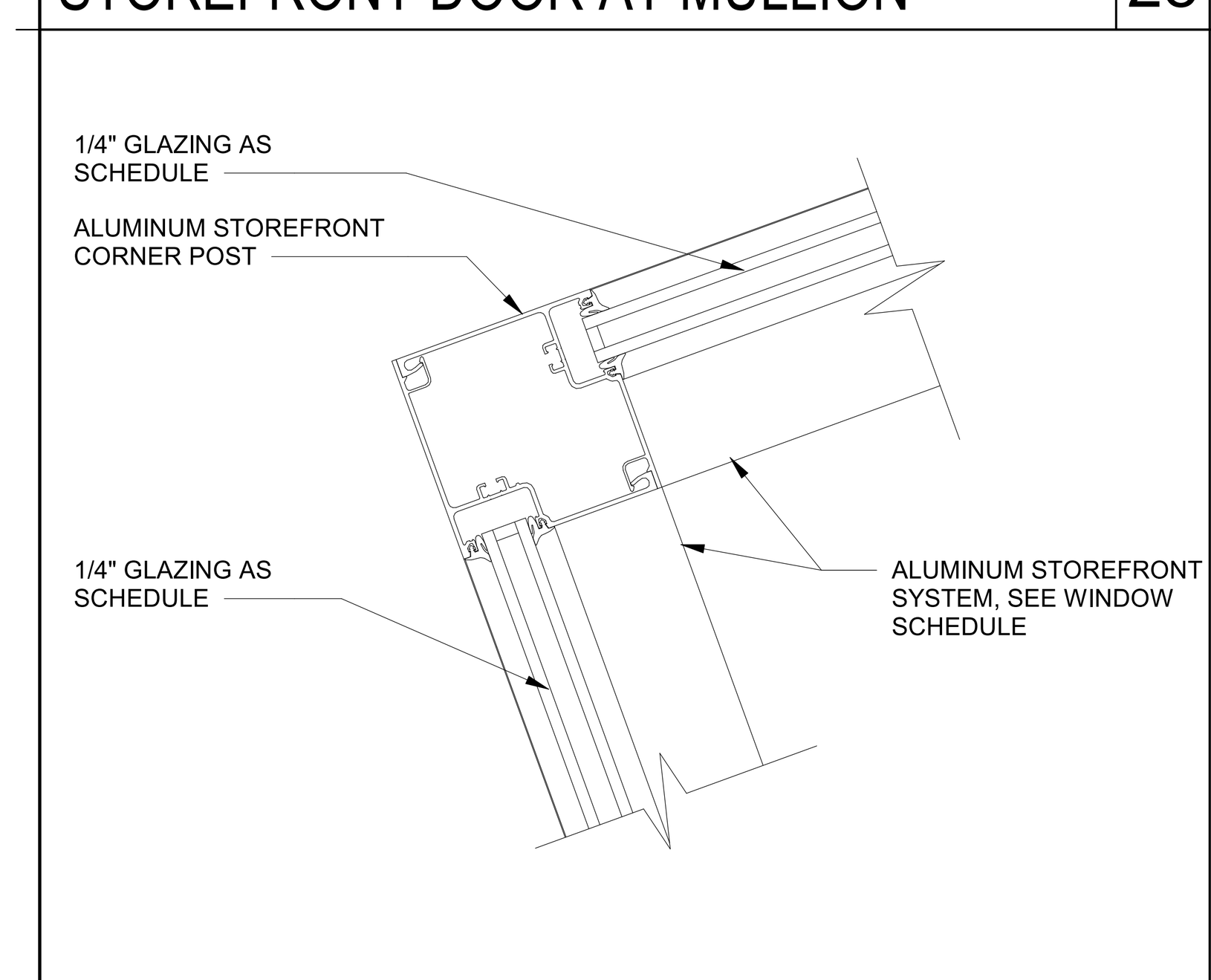

INT. STOREFRONT CORNER 3" = 1'-0" 29

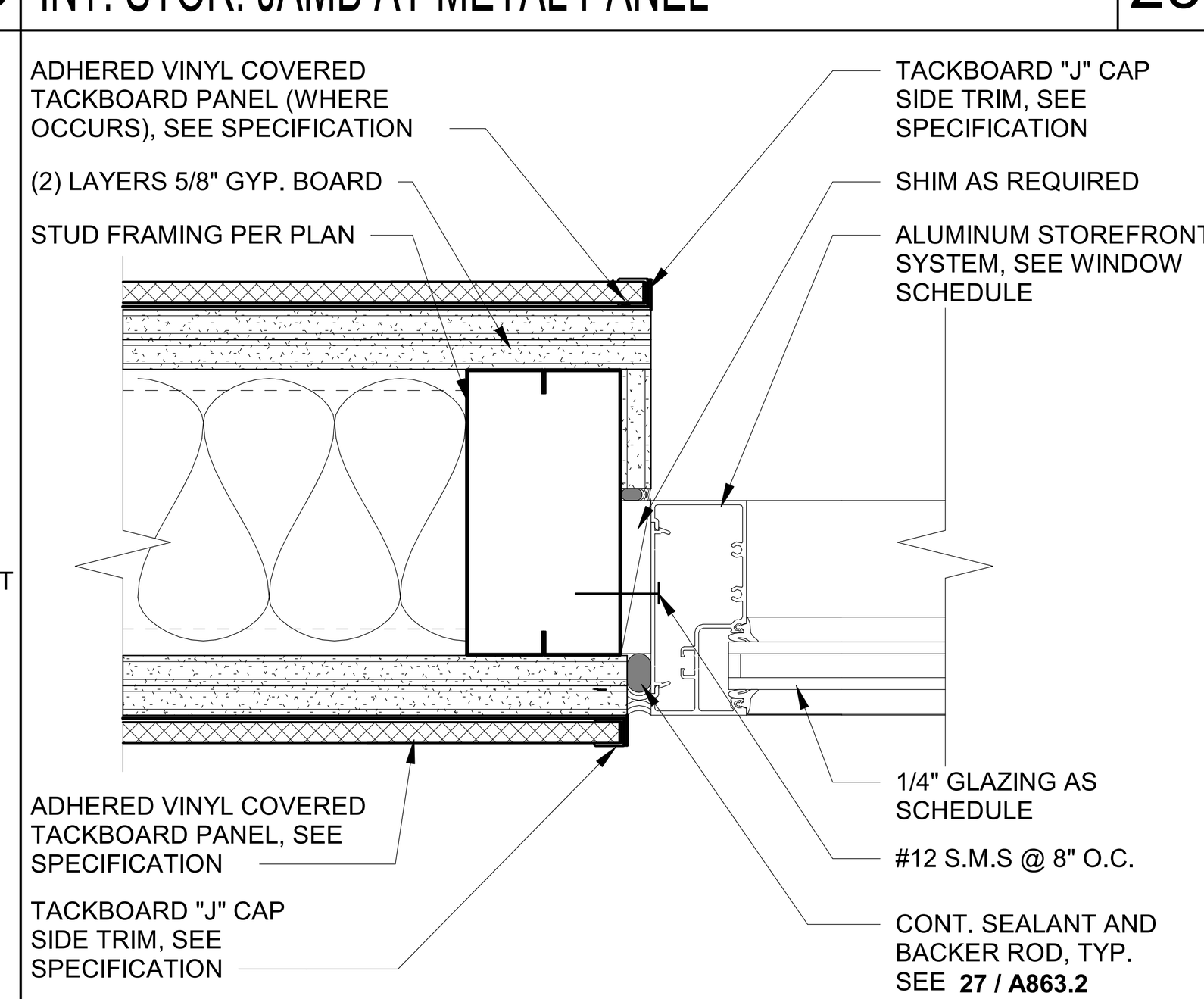

INT. ALUM. STOR. JAMB AT TACKBOARD 3" = 1'-0" 24

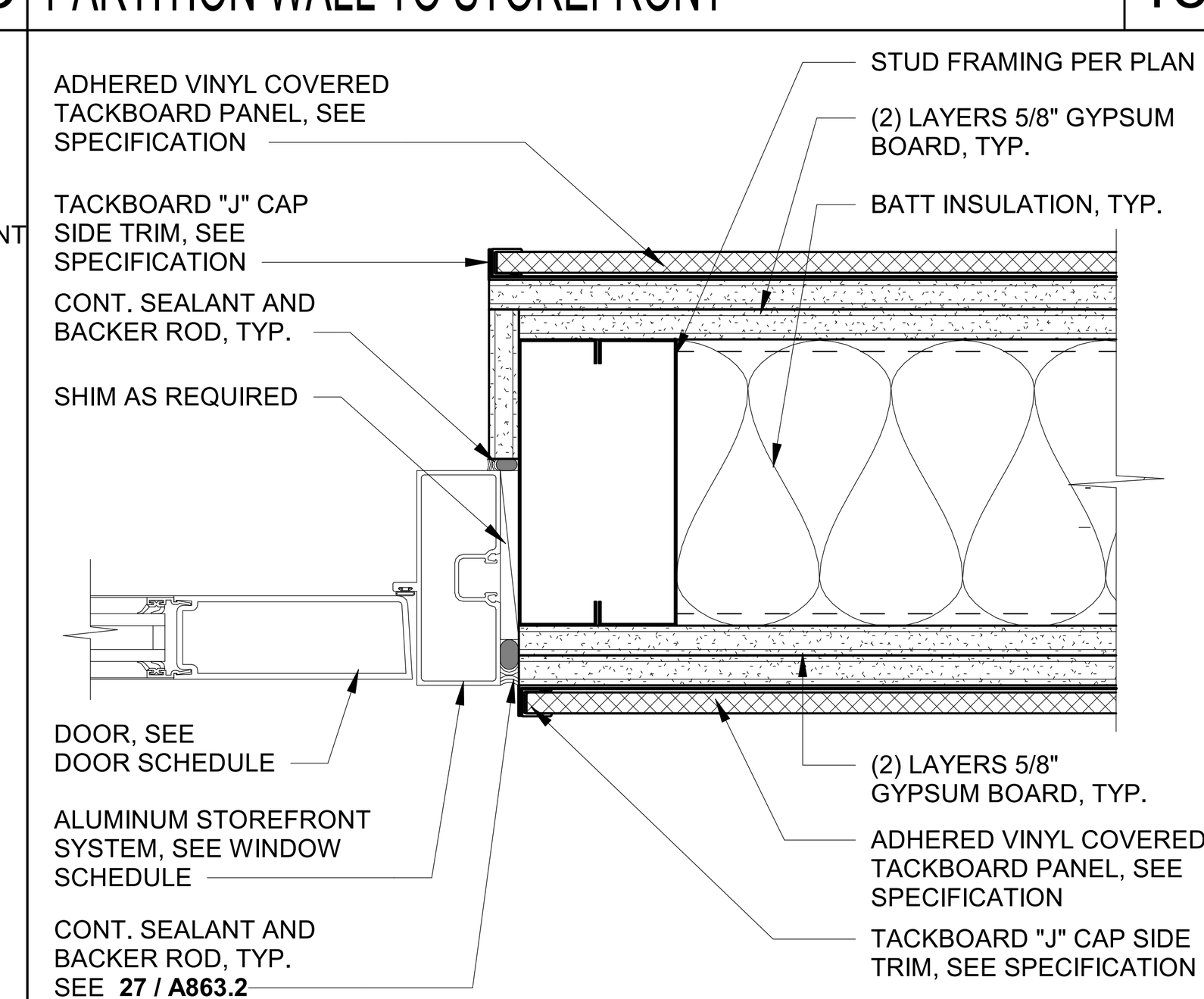

INT.ALUM. STOR. JAMB AT TACKBOARD 3" = 1'-0" 19

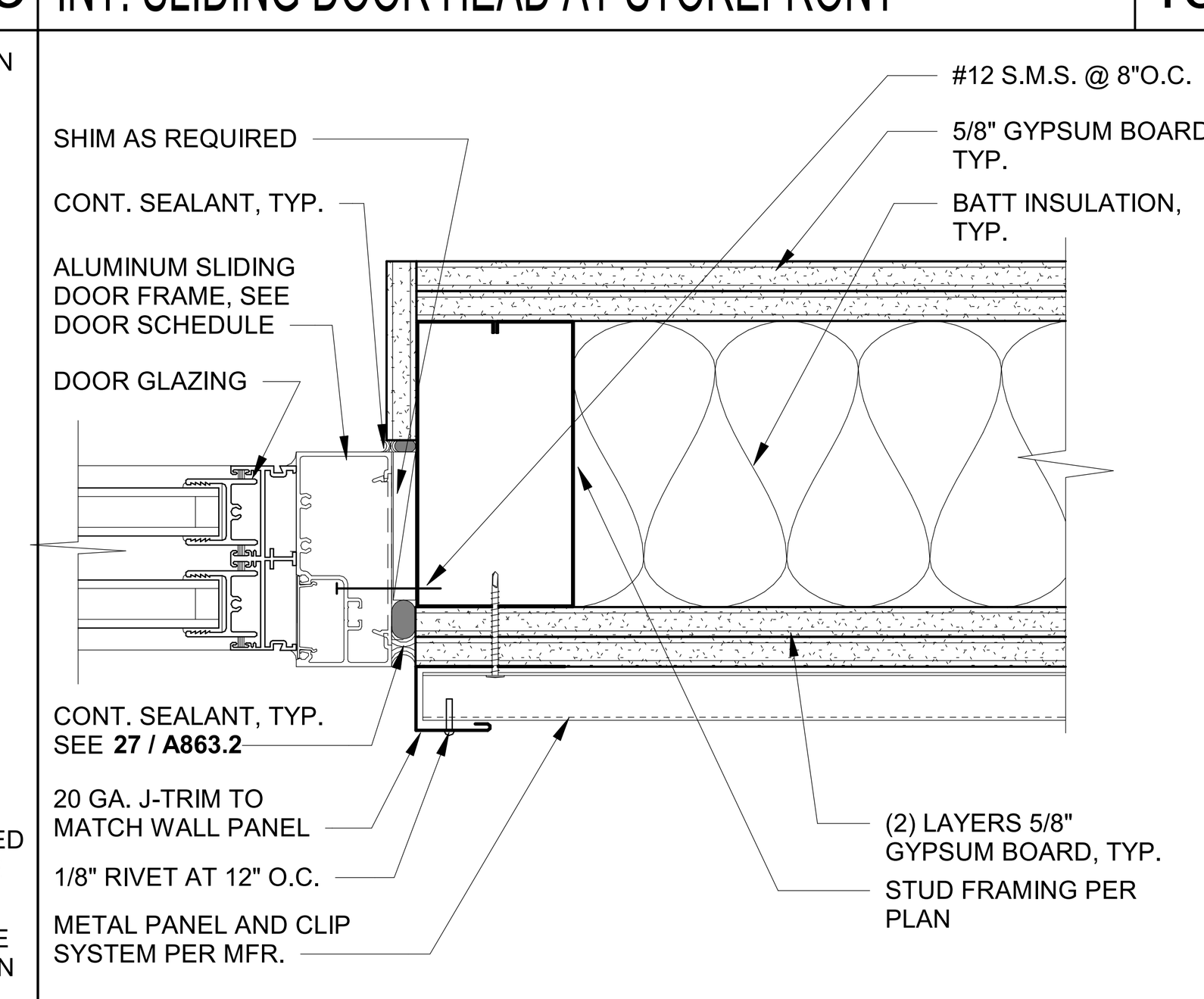

INT. SLIDING DOOR JAMB AT METAL PANEL 3" = 1'-0" 14

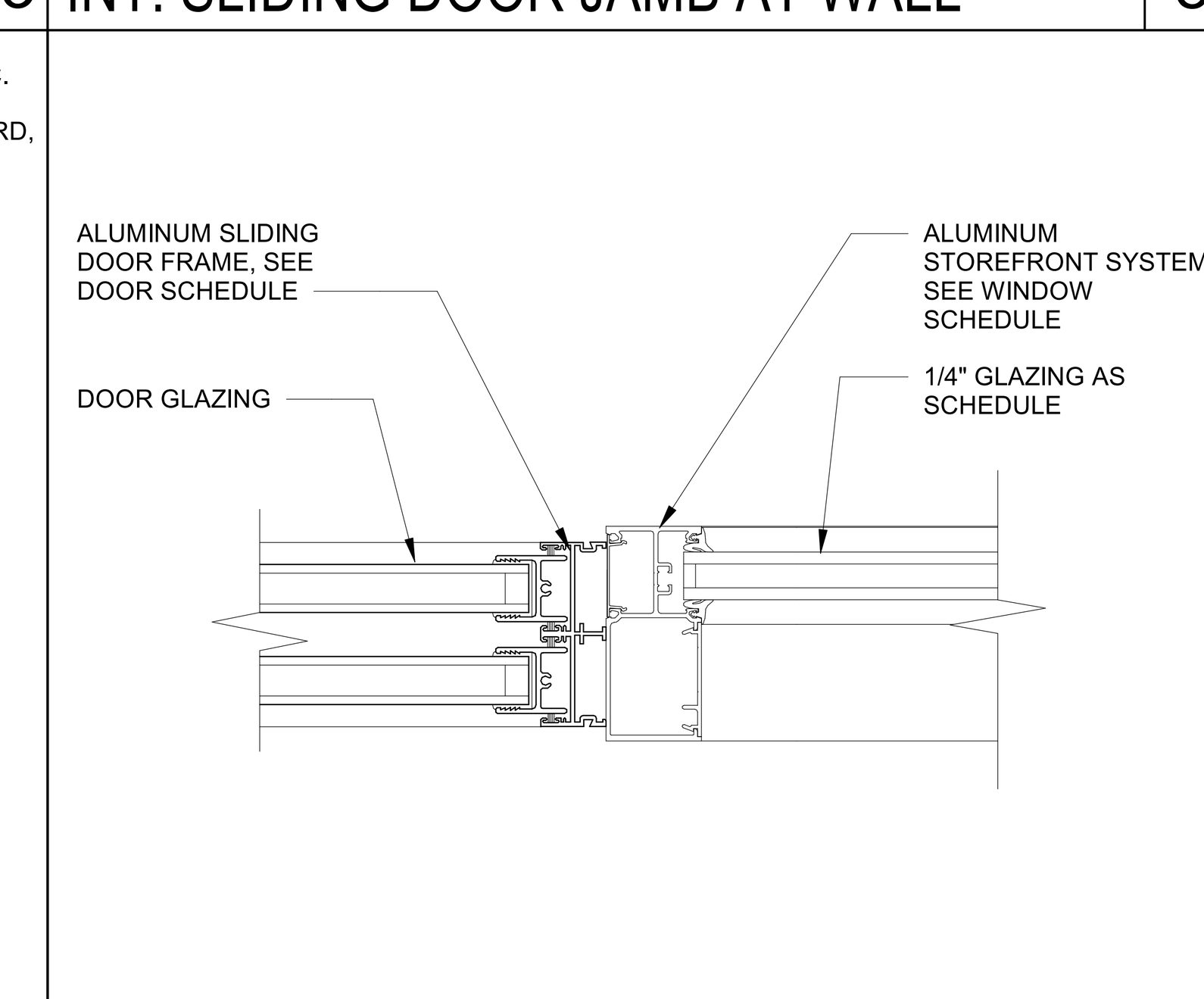

SLIDING DOOR AT STOREFRONT MULLION 3" = 1'-0" 9

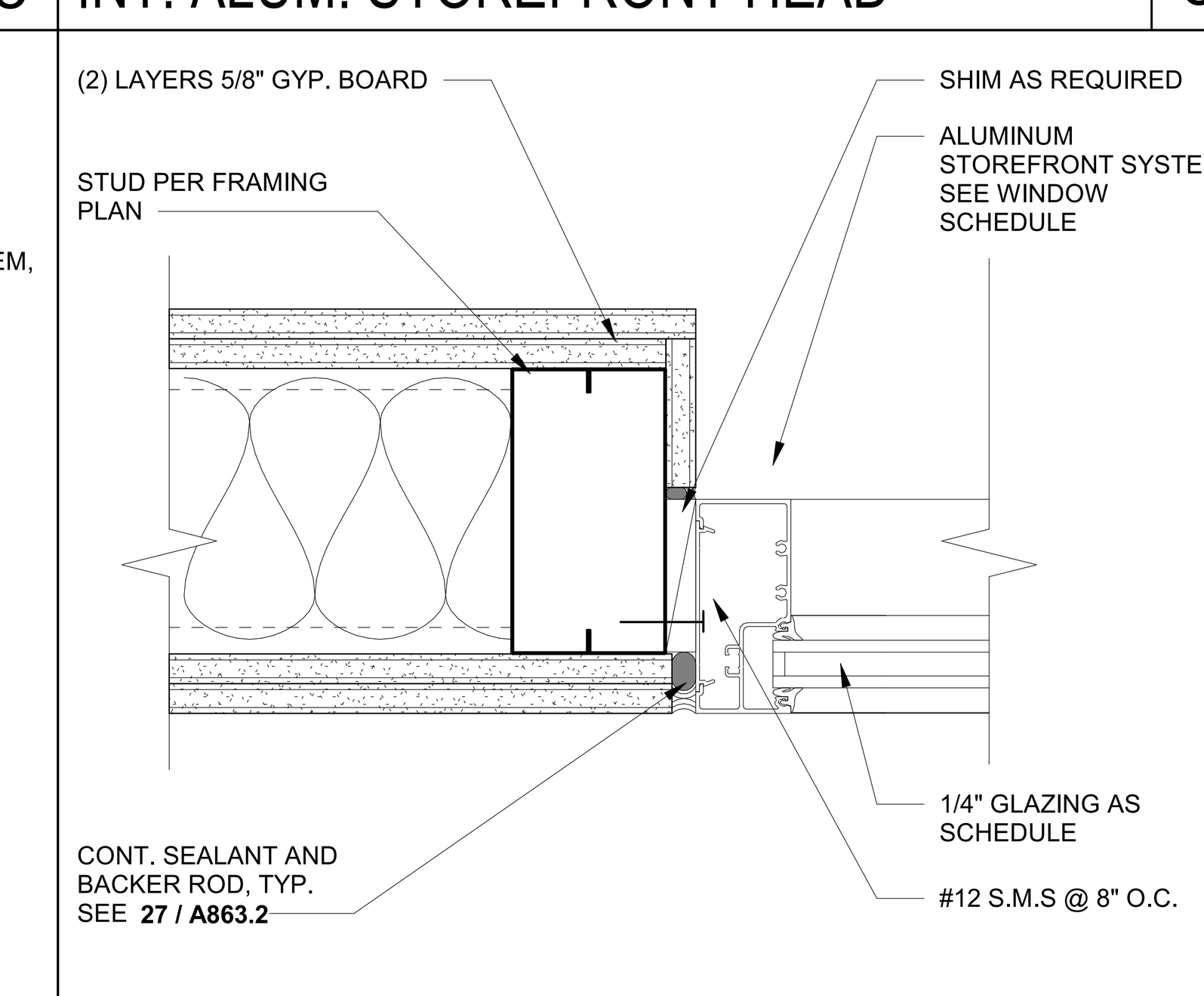

INT. ALUM. STOREFRONT JAMB 3" = 1'-0" 4

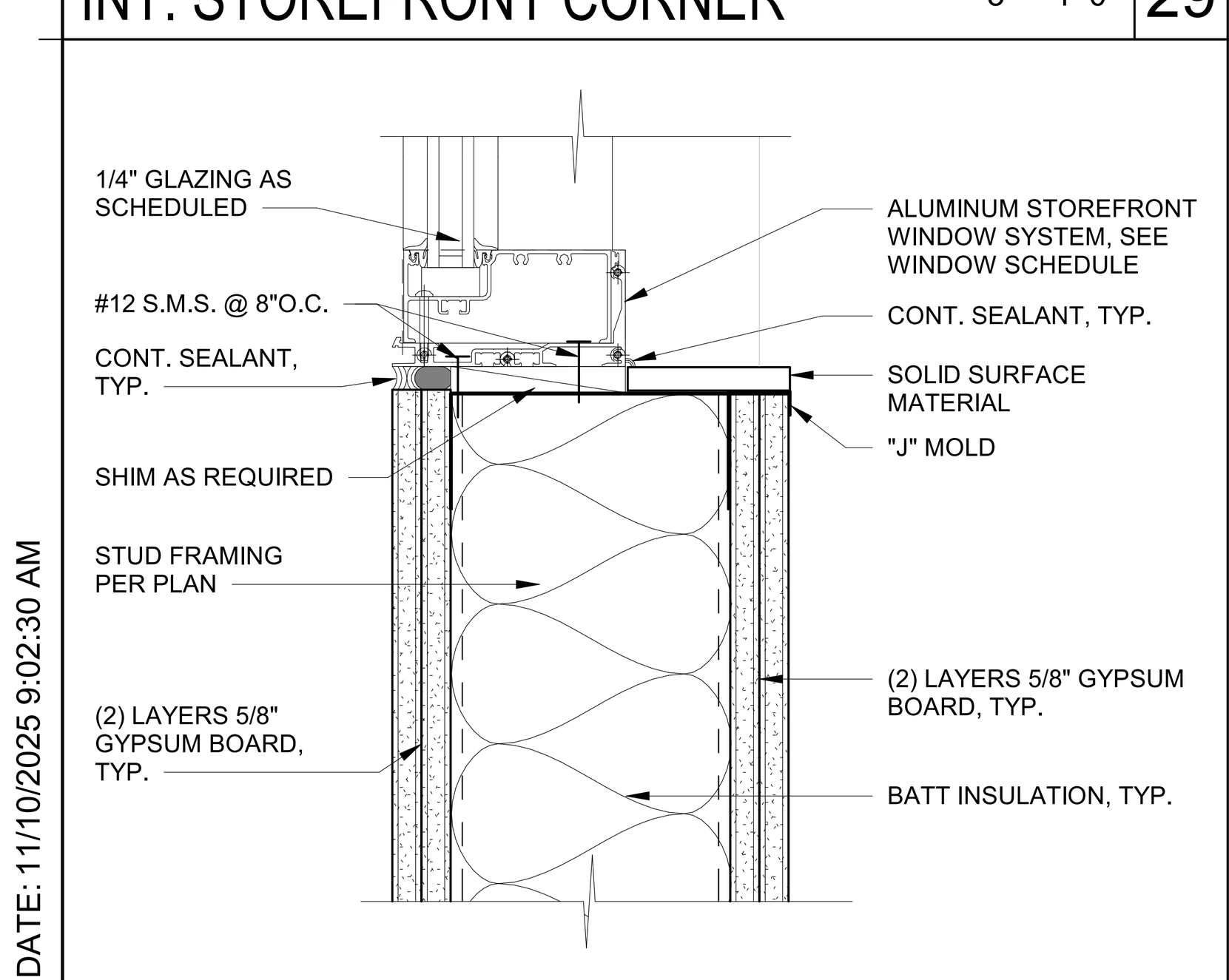

INT. ALUM. WINDOW SILL 3" = 1'-0" 30

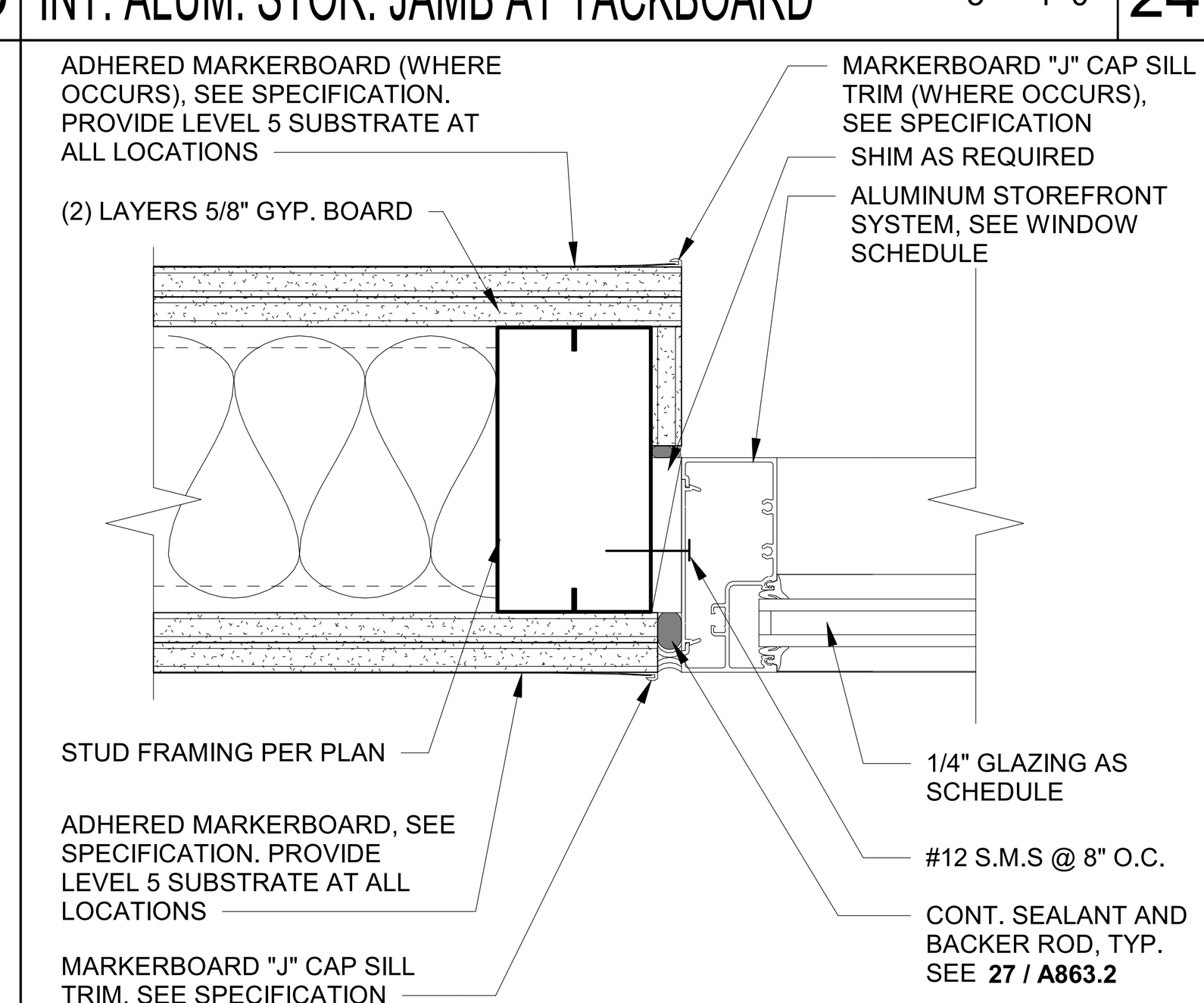

INT. ALUM. STOR. JAMB AT MARKERBOARD 3" = 1'-0" 25

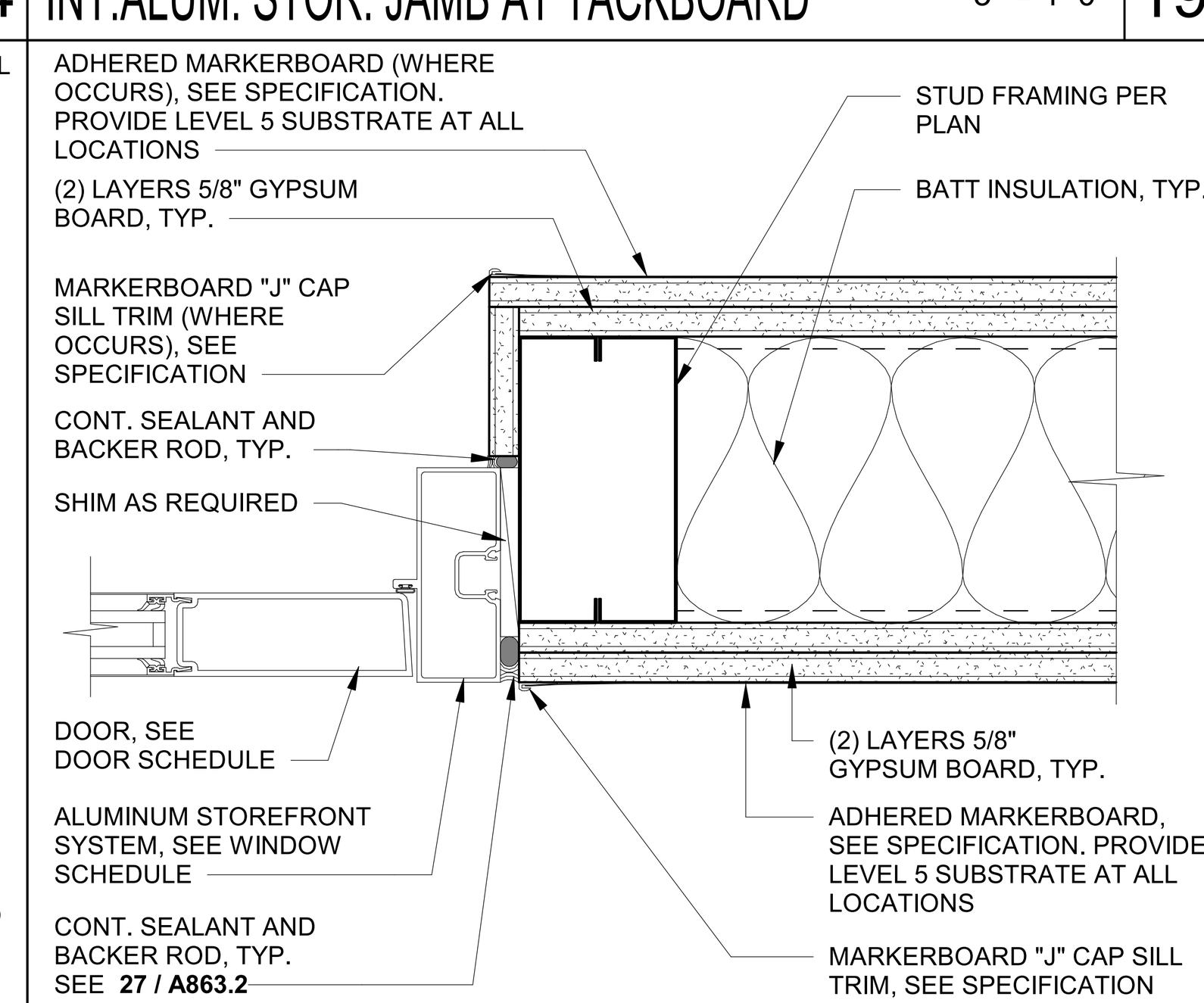

INT.ALUM. STOR. JAMB AT MARKERBOARD 3" = 1'-0" 20

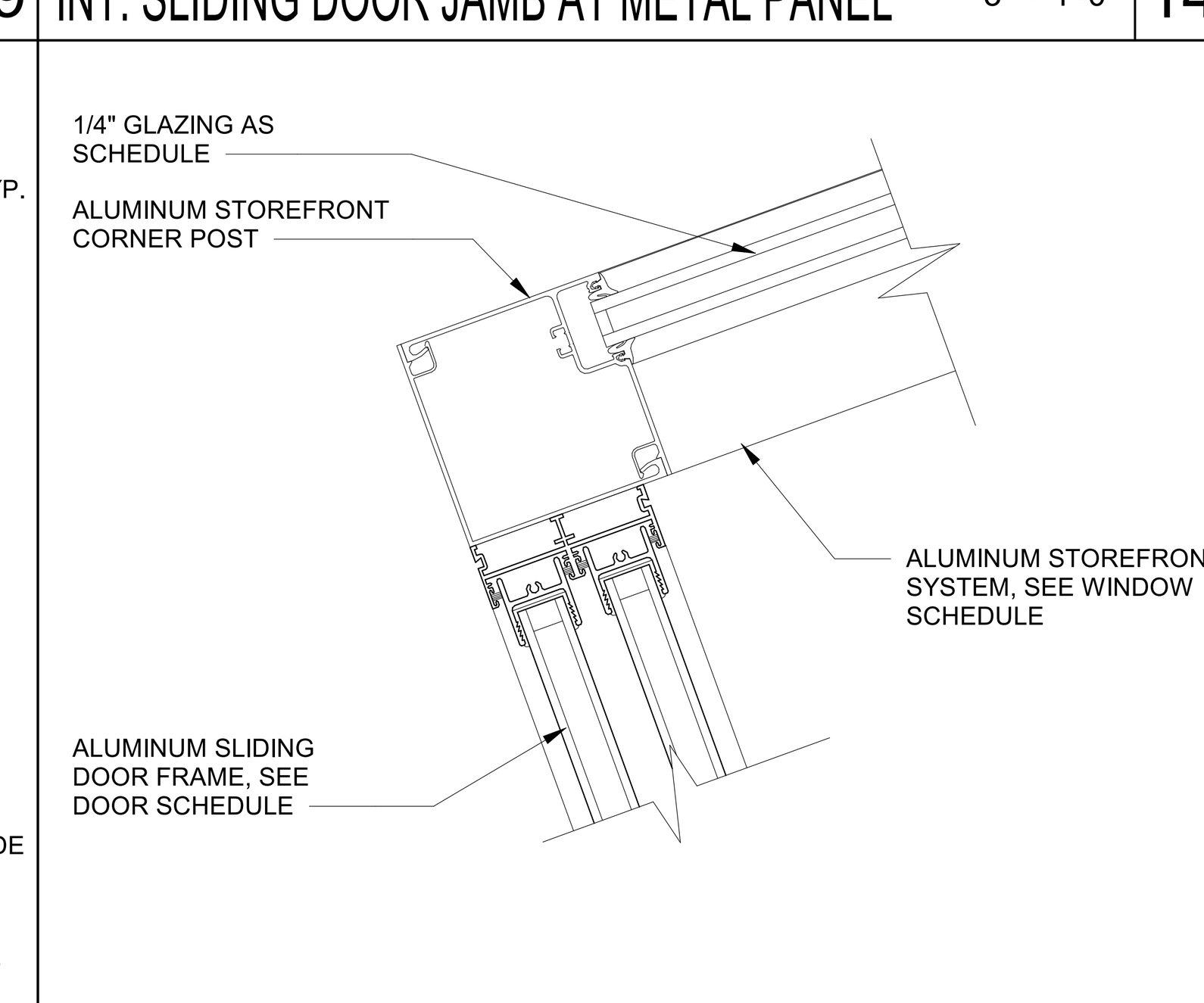

INT. SLIDING DOOR JAMB AT STOR. CORNER 3" = 1'-0" 15

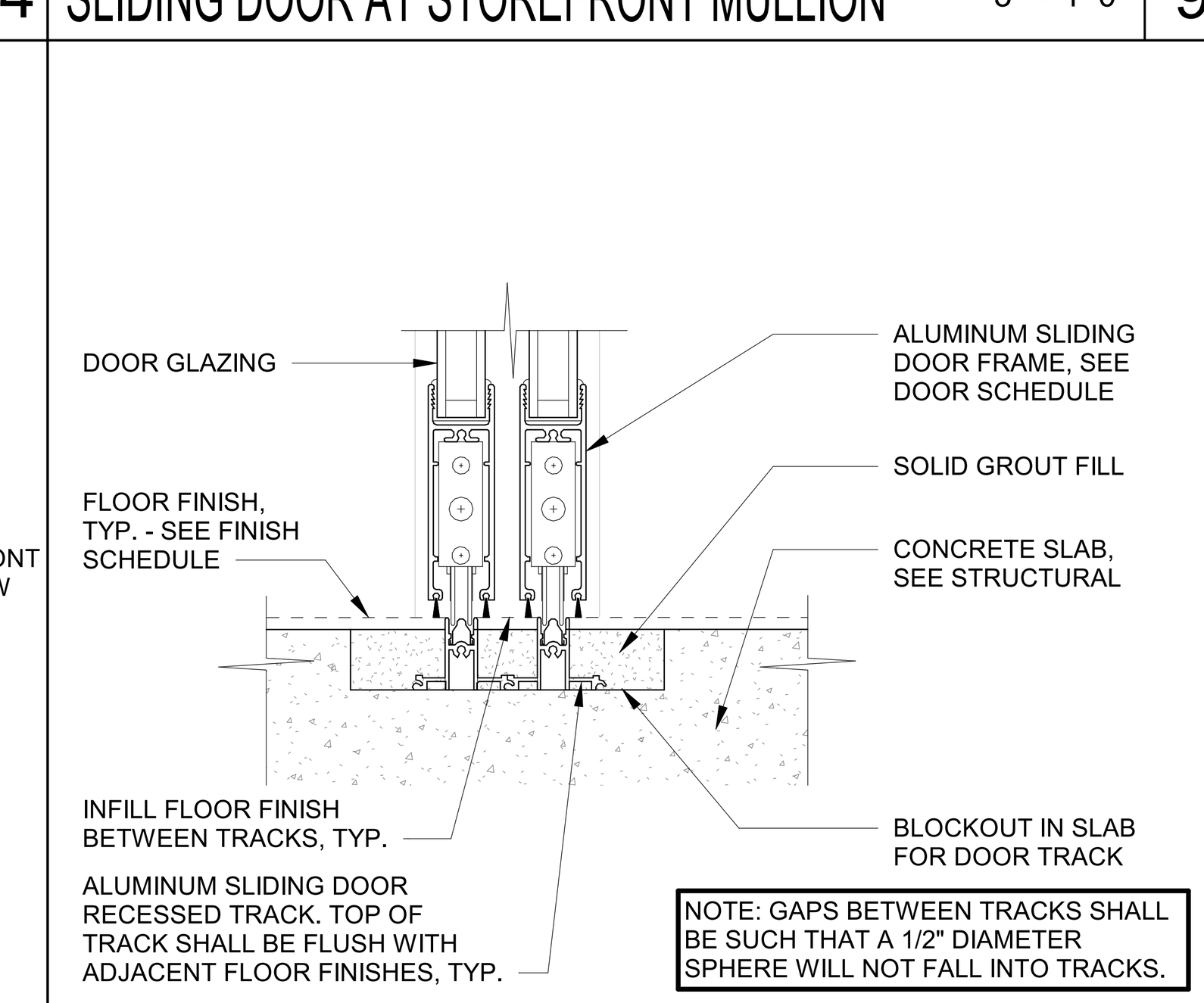

INT. SLIDING DOOR SILL 3" = 1'-0" 10

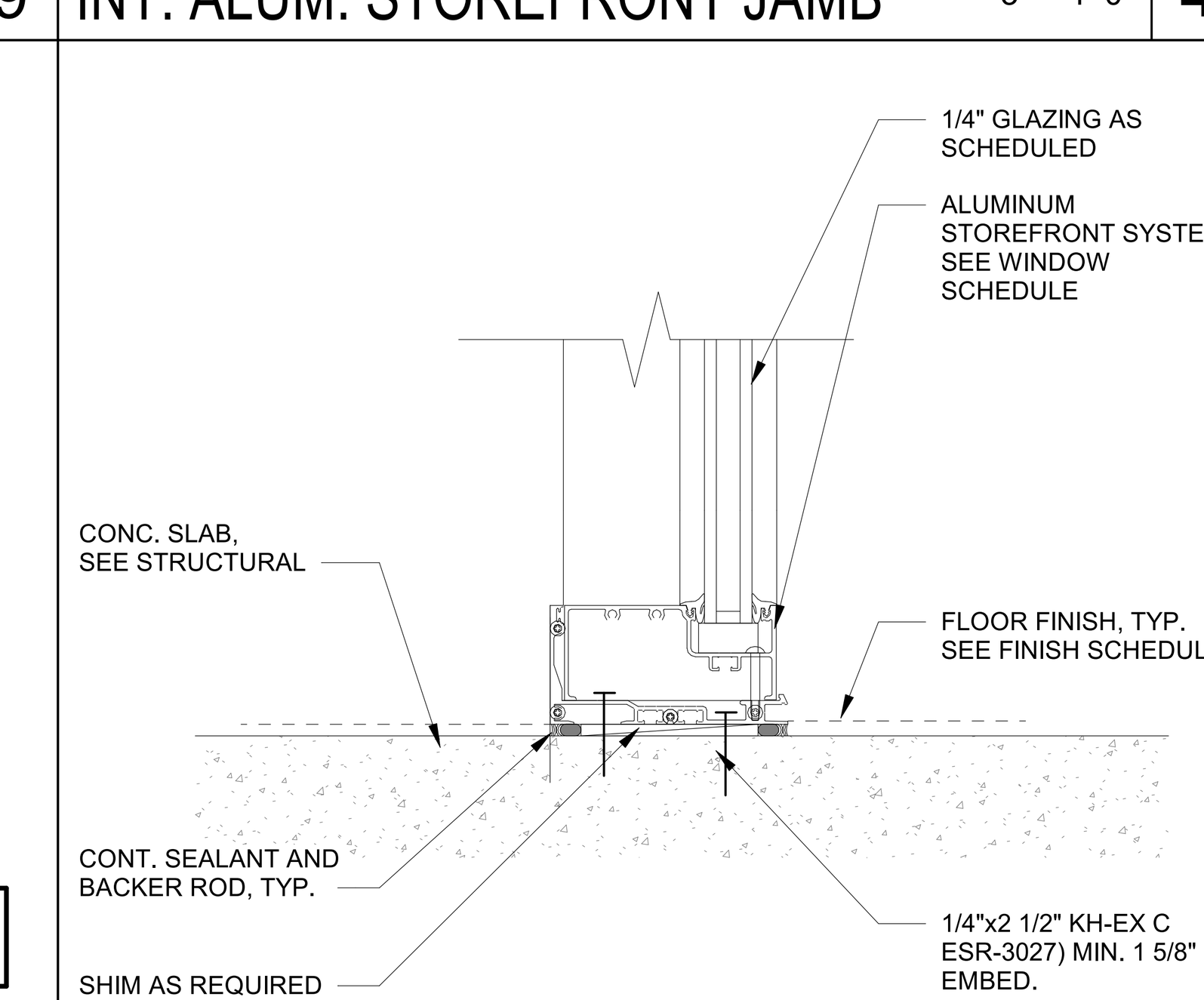

INT. ALUM. STOREFRONT SILL 3" = 1'-0" 5

IDENTIFICATION STAMP
DIV. OF THE STATE ARCHITECT
APP: 02-122821 INC: 2
REVIEWED FOR
SS ☑ FLS ☑ ACS ☑
DATE: 11/20/2025

Teter, Inc. expressly reserves its common law copyright and other property rights in these plans. This document, the ideas and designs incorporated herein, as an instrument of professional service, is not to be used in whole or in part, for any other project without prior written authorization.

MARK	DATE	DESCRIPTION
A	11/13/2025	DSA BACKCHECK

LICENSED ARCHITECT JONATHAN COULTER C-31093 REN. 03-31-27 STATE OF CALIFORNIA

TETER, INC.
FRESNO HEADQUARTERS
VISALIA | BAKERSFIELD | MODESTO | SAN LUIS OBISPO
ARCHITECTS ENGINEERS CONNECTED

VISALIA CAMPUS UNIVERSITY CENTER
COLLEGE OF THE SEQUOIAS - INCREMENT 2
915 S. MOONEY BLVD
VISALIA, CALIFORNIA

DRAWING TITLE
INTERIOR OPENING DETAILS

PROJECT NO.
22-12498

DRAWING
A818.2

\\tetr-file1\Users\tara.chong_TETR\Documents\12498-A-UC_tara.chong.rvt

PLOT DATE: 11/10/2025 9:02:30 AM

\\tet-file1\Users\tara.chong_TETR\Documents\12498-A-UC_tara.chong.rvt

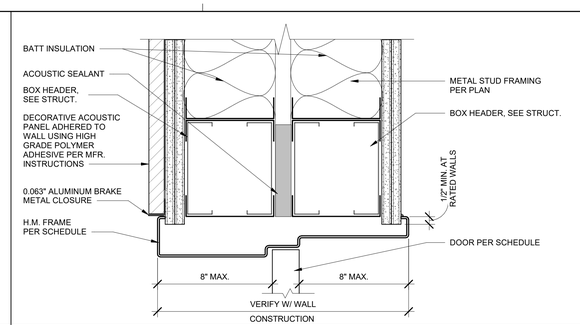

DOOR HEAD INTERIOR 3" = 1'-0" 16

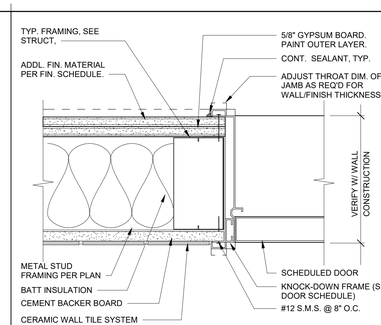

DOOR JAMB INT. KD AT CERAMIC TILE 3" = 1'-0" 11

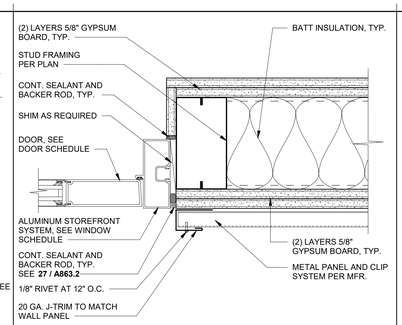

INT. STOR. JAMB AT HORIZ. METAL PANEL 3" = 1'-0" 6

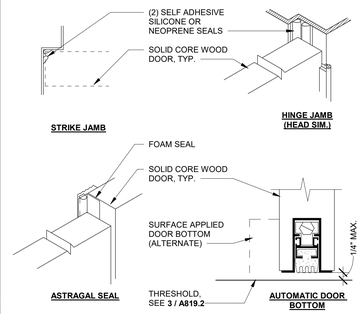

MANUFACTURER	PERIMETER	*ASTRAGAL	AUTOMATIC DOOR BOTTOM	
			MORTISE	SURFACE MOUNTED
NATIONAL GUARD	5050	109N	423N	420N
PEMKO	S 88	355CS	434AR/420A^0	
REESE	797		371	521
ULTRA			DB 043	
ZERO		1840	369	367

* NO ACOUSTICAL TEST DATA FROM MANUFACTURER
^0 ALTERNATE FOR HOLLOW METAL DOORS

NOTES:
1. INSTALL DOOR IN FRAME WITH 1/8" MAX. TOLERANCE AT HEAD, HINGE & STRIKE JAMB.
2. PERIMETER SEAL SHALL ALWAYS BE MIN. SEMI COMPRESSED WITH DOOR CLOSED.
3. IF TOLERANCE AT PERIMETER IS GREATER THAN 1/8" & DOOR CANNOT BE ADJUSTED, REPLACE WITH 1/2" SEAL INSTEAD OF 1/4" SEAL.
4. ALL GAPS AT INTERSECTION OF ASTRAGAL & AUTOMATIC DOOR BOTTOM SHALL BE SEALED.
5. FOR DOUBLE INTERCONNECTING DOORS PROVIDE PERIMETER SEALS AND AUTOMATIC DOOR BOTTOMS ON BOTH DOORS.
6. IF REQUIRED, SUBSTITUTE A SURFACE APPLIED AUTOMATIC DOOR BOTOOM WITH REESE 521 OR EQUAL.

ACOUSTIC DOOR SEAL N.T.S. 2

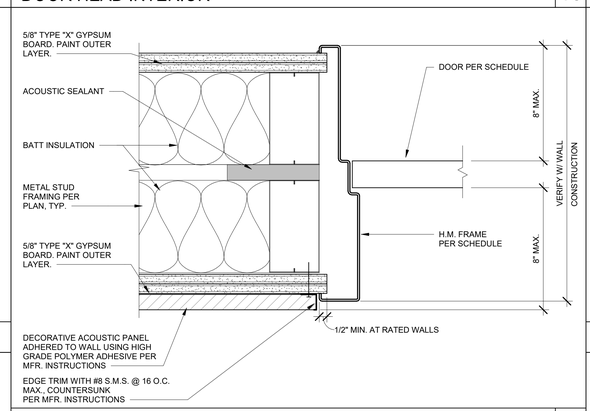

DOOR JAMB INT. H.M. 3" = 1'-0" 18

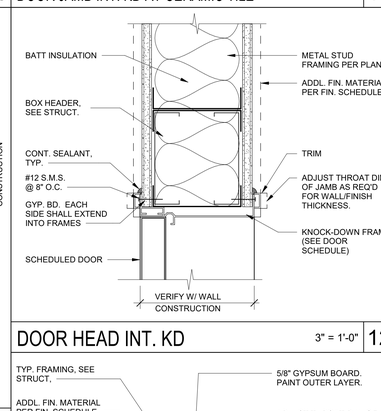

DOOR HEAD INT. KD 3" = 1'-0" 12

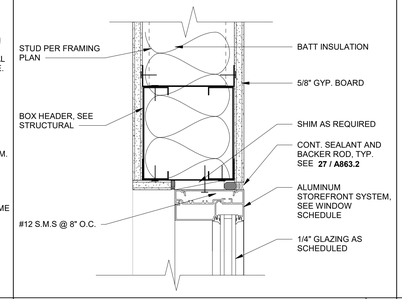

INT. ALUM. STOREFRONT HEAD 3" = 1'-0" 7

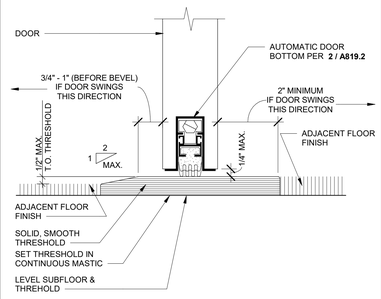

ACOUSTIC DOOR THRESHOLD N.T.S. 3

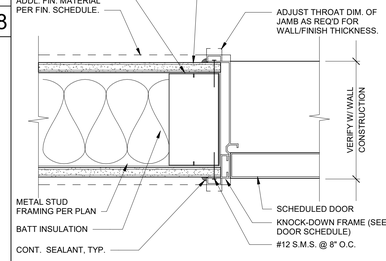

DOOR JAMB INT. KD 3" = 1'-0" 13

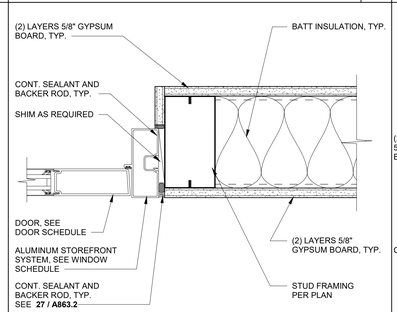

INT.ALUM. STOREFRONT JAMB 3" = 1'-0" 8

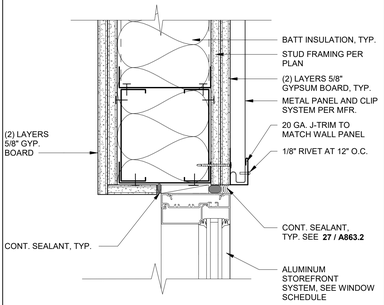

INT. STOR. HEAD AT HORIZ. METAL PANEL 3" = 1'-0" 4

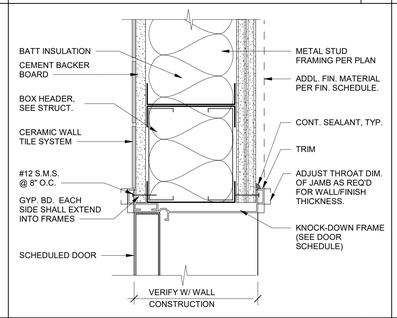

DOOR HEAD INT. KD AT CERAMIC TILE 3" = 1'-0" 10

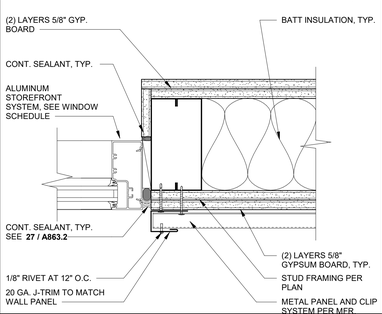

INT. STOR. JAMB AT HORIZ. METAL PANEL 3" = 1'-0" 5

IDENTIFICATION STAMP
DIV. OF THE STATE ARCHITECT
APP: 02-122821 INC: 2
REVIEWED FOR
SS ☑ FLS ☑ ACS ☑
DATE: 11/20/2025

Teter, Inc. expressly reserves its common law copyright and other property rights in these plans. This document, the ideas and designs incorporated herein, as an instrument of professional service, is not to be used in whole or in part, for any other project without prior written authorization.

MARK	DATE	DESCRIPTION
A	11/13/2025	DSA BACKCHECK

LICENSED ARCHITECT REGISTERED PROFESSIONAL ENGINEER STATE OF CALIFORNIA

TETER, INC.
FRESNO HEADQUARTERS
VISALIA | BAKERSFIELD | MODESTO | SAN LUIS OBISPO
ARCHITECTS ENGINEERS CONNECTED

VISALIA CAMPUS UNIVERSITY CENTER
COLLEGE OF THE SEQUOIAS - INCREMENT 2
915 S. MOONEY BLVD
VISALIA, CALIFORNIA

DRAWING TITLE
INTERIOR OPENING DETAILS

PROJECT NO.
22-12498

DRAWING
A819.2

PLOT DATE: 11/10/2025 9:02:38 AM

\\tet-file1\Users\tara.chong_TETR\Documents\12498-A-UC_tara.chong.rvt

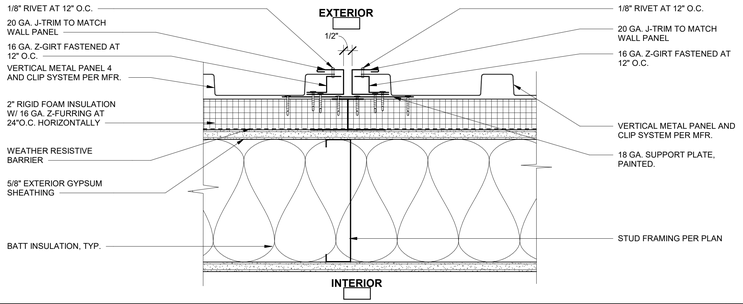

TYP. METAL PANEL 1 AT METAL PANEL 4 — 3" = 1'-0" — 21

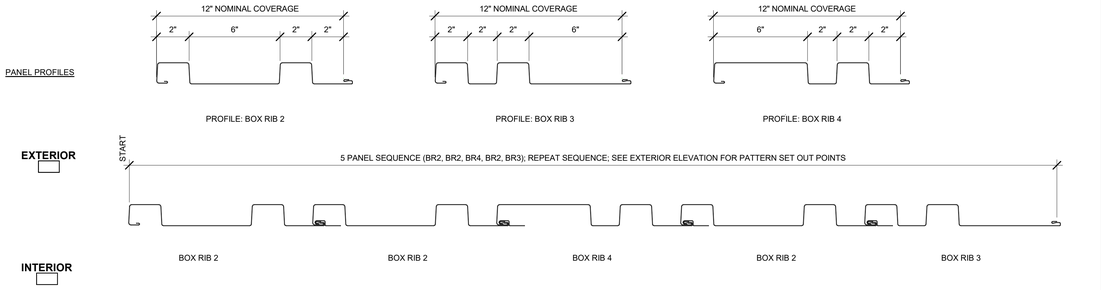

TYPE 1 VERT. METAL PANELS & LAYOUT PATTERN — 3" = 1'-0" — 1

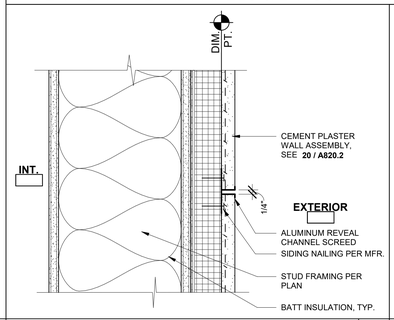

TYP. HORIZ. REVEAL AT CEMENT PLASTER — 3" = 1'-0" — 12

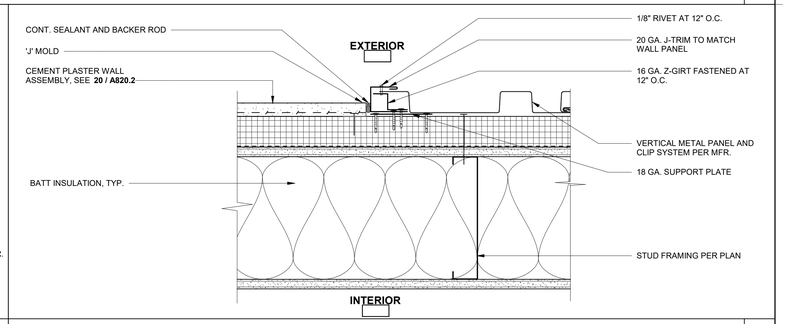

TYP. VERTICAL METAL PANEL AT CEMENT PLASTER — 3" = 1'-0" — 2

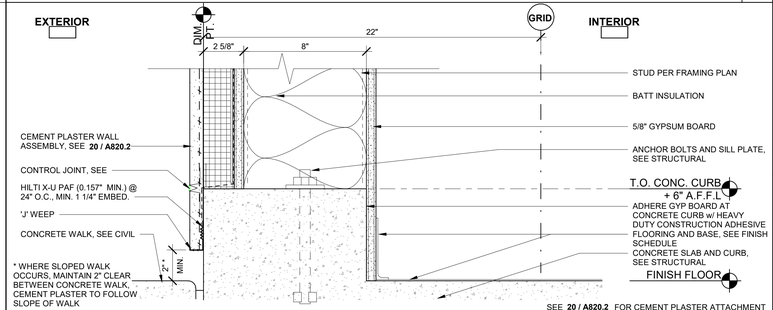

CONCRETE WALL AT METAL PANEL — 3" = 1'-0" — 23

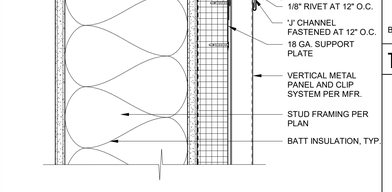

METAL PANEL AT CEMENT PLASTER VERT. — 3" = 1'-0" — 19

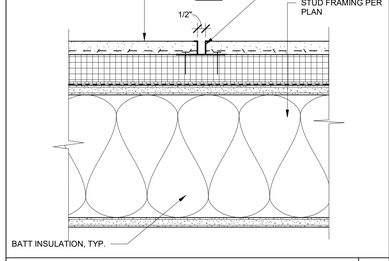

TYP. VERT. REVEVEAL AT CEMENT PLASTER — 3" = 1'-0" — 13

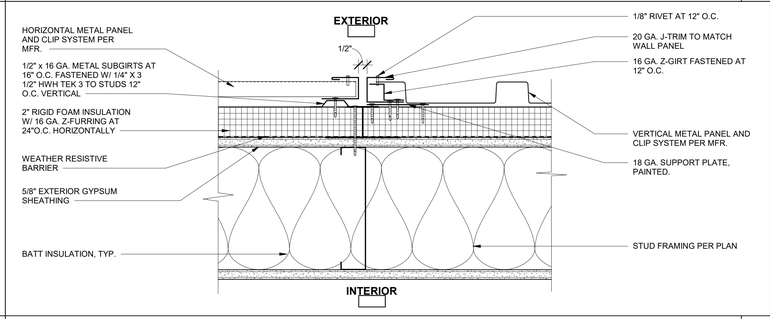

VERTICAL METAL PANEL AT HORIZONTAL METAL PANEL — 3" = 1'-0" — 3

EXTERIOR CURB AT CEMENT PLASTER — 3" = 1'-0" — 24

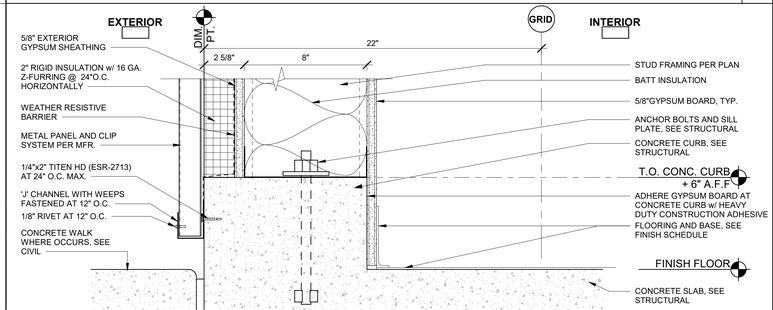

EXTERIOR CURB AT METAL PANEL — 3" = 1'-0" — 25

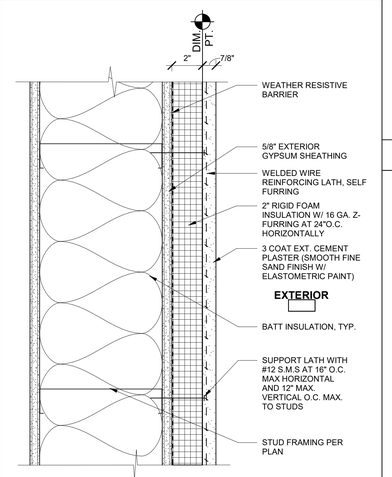

CEMENT PLASTER ATTACHMENT — 3" = 1'-0" — 20

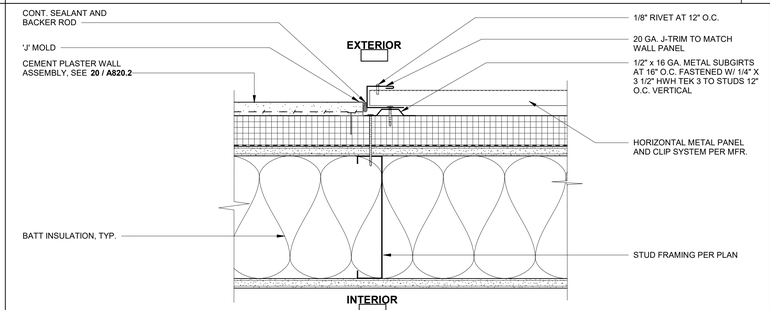

TYP. HORIZONTAL METAL PANEL AT CEMENT PLASTER — 3" = 1'-0" — 5

PLOT DATE: 11/10/2025 9:02:46 AM

IDENTIFICATION STAMP
DIV. OF THE STATE ARCHITECT
APP: 02-122821 INC: 2
REVIEWED FOR
SS ☑ FLS ☑ ACS ☑
DATE: 11/20/2025

Teter, Inc. expressly reserves its common law copyright and other property rights in these plans. This document, the ideas and designs incorporated herein, as an instrument of professional service, is not to be used in whole or in part, for any other project without prior written authorization.

MARK	DATE	DESCRIPTION
A	11/13/2025	DSA BACKCHECK

LICENSED ARCHITECT — CONSULTANT — CONSTRUCTION CONTROL — STATE OF CALIFORNIA

TETER, INC.
FRESNO HEADQUARTERS
VISALIA | BAKERSFIELD | MODESTO | SAN LUIS OBISPO
ARCHITECTS ENGINEERS CONNECTED

VISALIA CAMPUS UNIVERSITY CENTER
COLLEGE OF THE SEQUOIAS - INCREMENT 2
915 S. MOONEY BLVD
VISALIA, CALIFORNIA

DRAWING TITLE
EXTERIOR WALL DETAILS

PROJECT NO.
22-12498

DRAWING
A820.2

\\tet-file1\Users\tara.chong_TETR\Documents\12498-A-UC_tara.chong.rvt

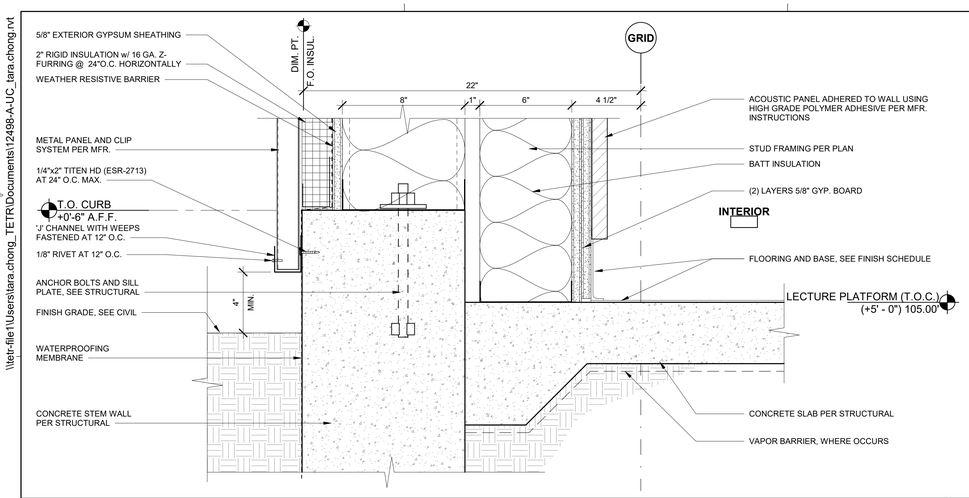

CONC. STEM WALL AT LECTURE PLATFORM — 3" = 1'-0" — 17

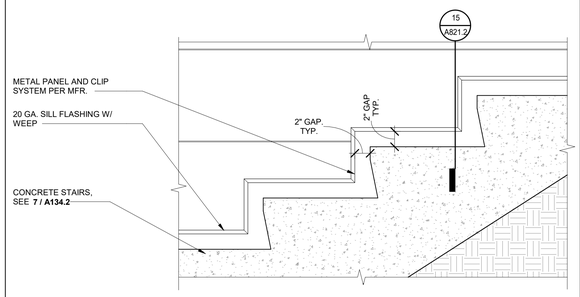

EXT. CONC. STAIRS AT METAL PANEL — 1 1/2" = 1'-0" — 12

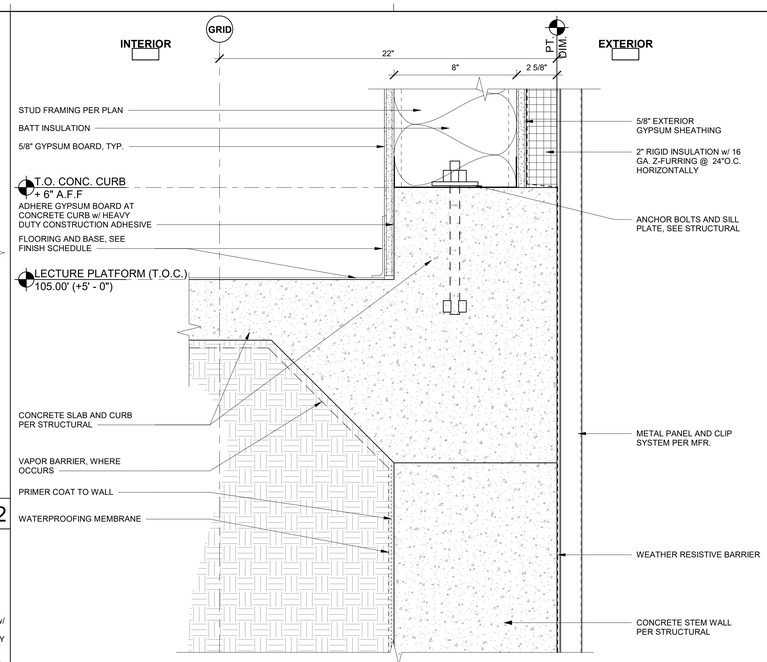

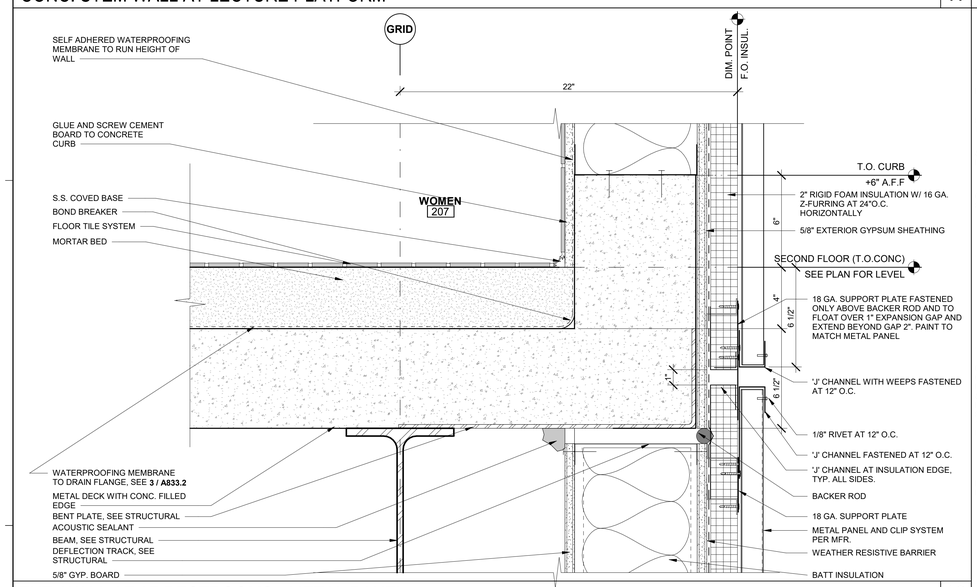

EXT. WALL AT 2F RESTROOMS - METAL PANEL — 3" = 1'-0" — 19

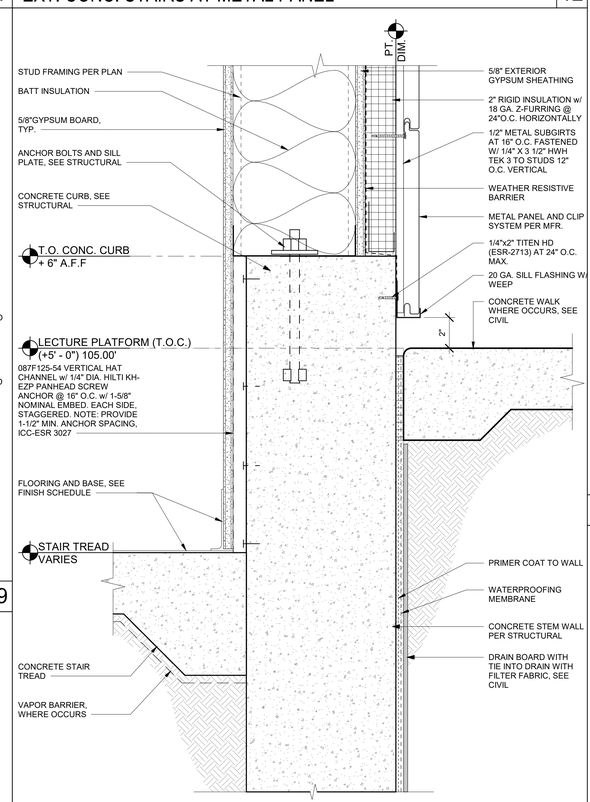

STAIR 4 AT CONC. STEM WALL — 3" = 1'-0" — 14

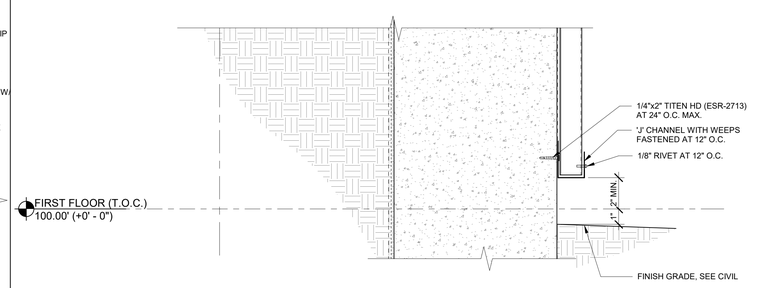

METAL PANEL AT CONC. STEM WALL — 3" = 1'-0" — 3

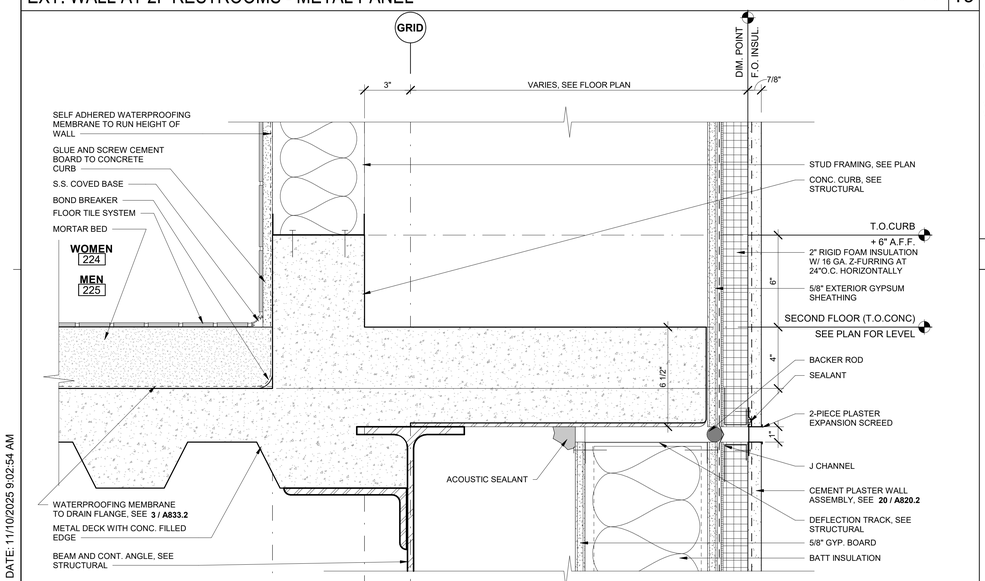

EXT. WALL AT 2F RESTROOMS - CEMENT PLASTER — 3" = 1'-0" — 20

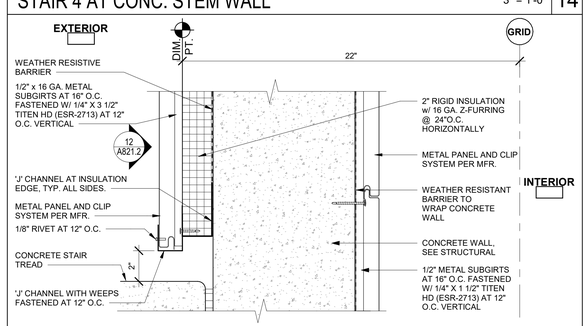

CONCRETE STAIR TREADS AT METAL PANEL — 3" = 1'-0" — 15

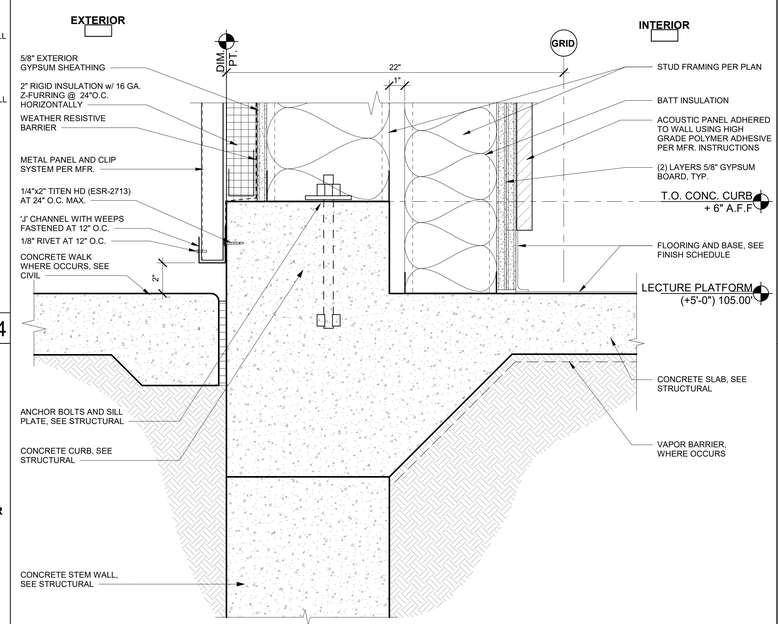

CONC. CURB AT DOUBLE STUD — 3" = 1'-0" — 5

IDENTIFICATION STAMP
DIV. OF THE STATE ARCHITECT
APP: 02-122821 INC: 2
REVIEWED FOR
SS ☑ FLS ☑ ACS ☑
DATE: 11/20/2025

Teter, Inc. expressly reserves its common law copyright and other property rights in these plans. This document, the ideas and designs incorporated herein, as an instrument of professional service, is not to be used in whole or in part, for any other project without prior written authorization.

MARK	DATE	DESCRIPTION
A	11/13/2025	DSA BACKCHECK

LICENSED ARCHITECT TIMOTHY J. TETER No. C-26000 STATE OF CALIFORNIA

TETER, INC.
ARCHITECTS ENGINEERS CONNECTED
FRESNO HEADQUARTERS
VISALIA | BAKERSFIELD | MODESTO | SAN LUIS OBISPO

VISALIA CAMPUS UNIVERSITY CENTER
COLLEGE OF THE SEQUOIAS - INCREMENT 2
915 S. MOONEY BLVD
VISALIA, CALIFORNIA

DRAWING TITLE
EXTERIOR WALL DETAILS

PROJECT NO.
22-12498

DRAWING
A821.2

PLOT DATE: 11/10/2025 9:02:54 AM

\\tet-file1\Users\tara.chong_TETER\Documents\12498-A-UC_tara.chong.rvt

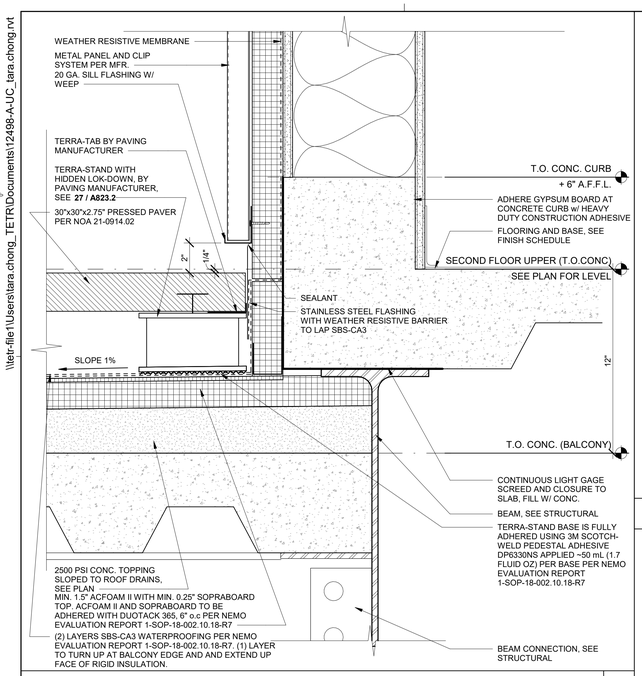

BALCONY AT WALL

3" = 1'-0" | 22

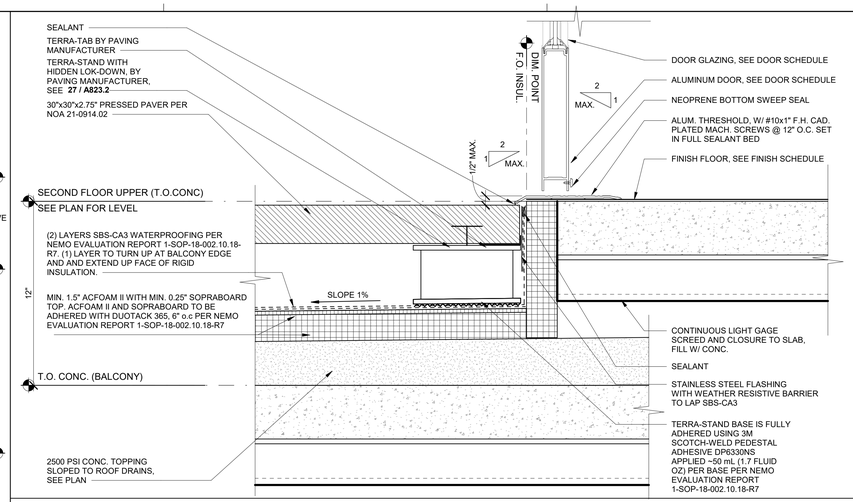

DOOR SILL AT BALCONY

3" = 1'-0" | 17

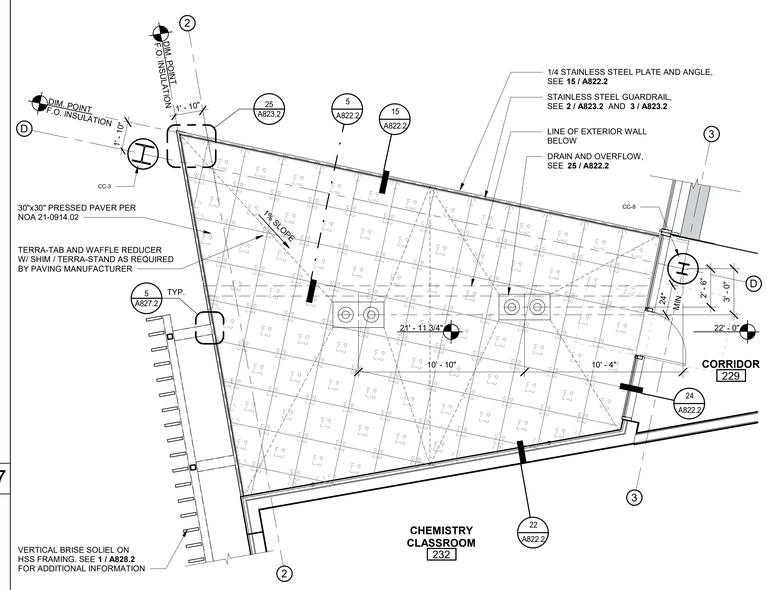

BALCONY - ENLARGED FLOOR PLAN

1/4" = 1'-0" | 2

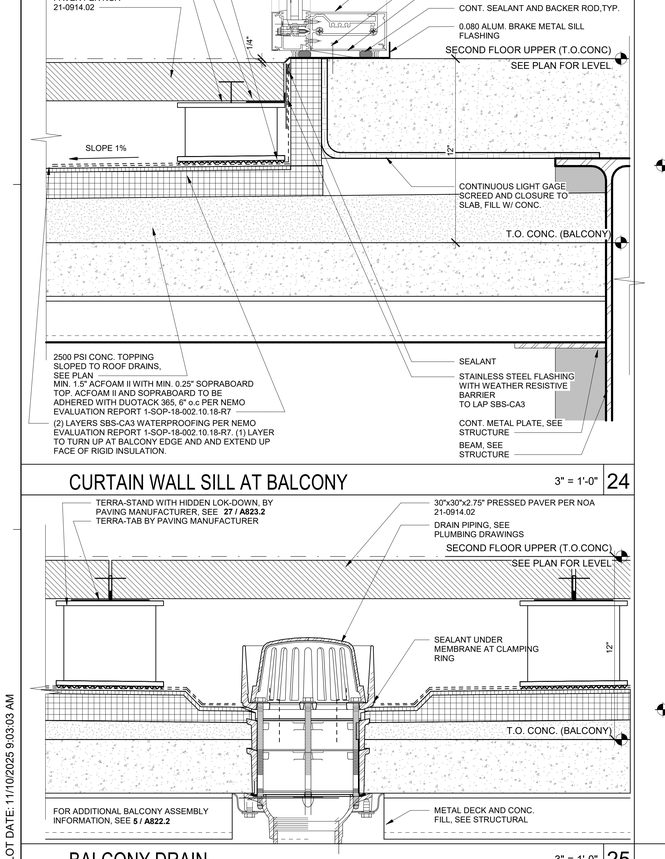

CURTAIN WALL SILL AT BALCONY

3" = 1'-0" | 24

BALCONY DRAIN

3" = 1'-0" | 25

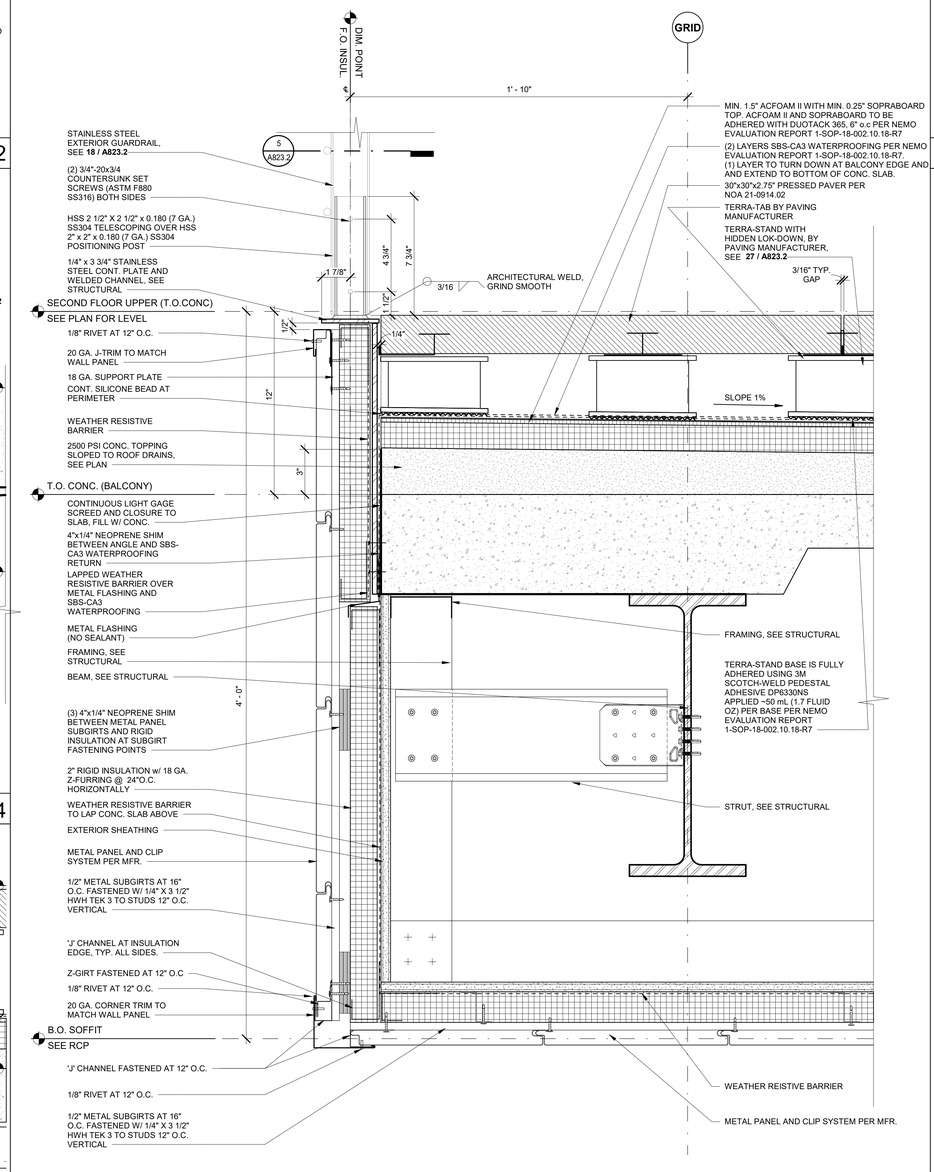

BALCONY EDGE

3" = 1'-0" | 15

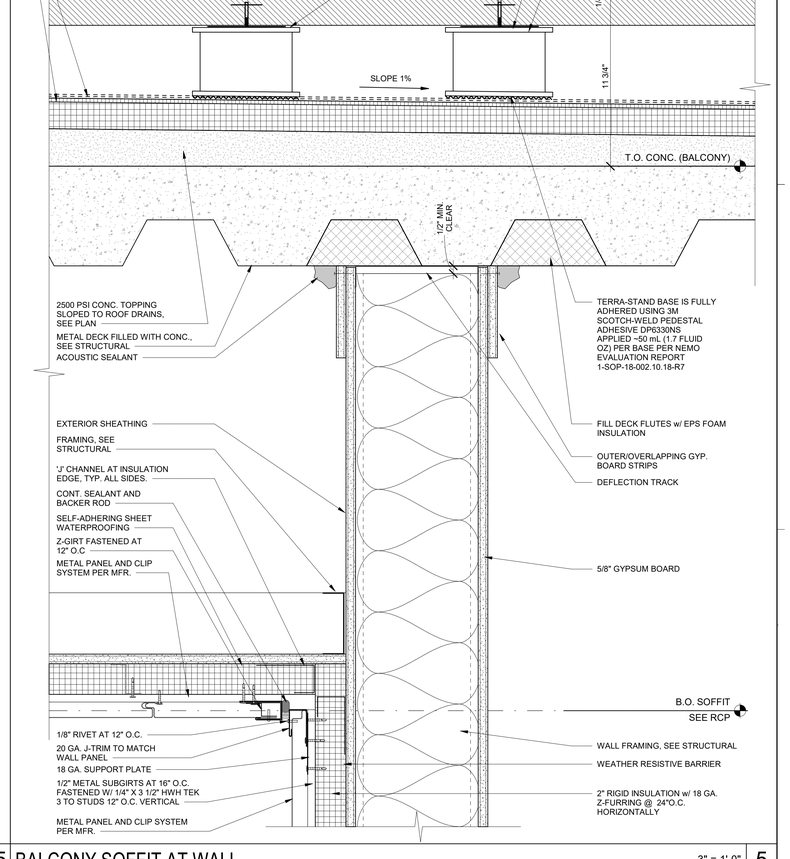

BALCONY SOFFIT AT WALL

3" = 1'-0" | 5

IDENTIFICATION STAMP
DIV. OF THE STATE ARCHITECT
APP: 02-122821 INC: 2
REVIEWED FOR
SS ☑ FLS ☑ ACS ☑
DATE: 11/20/2025

Teter, Inc. expressly reserves its common law copyright and other property rights in these plans. This document, the ideas and designs incorporated herein, as an instrument of professional service, is not to be used in whole or in part, for any other project without prior written authorization.

MARK	DATE	DESCRIPTION
A	11/13/2025	DSA BACKCHECK

TETER, INC.
FRESNO HEADQUARTERS
VISALIA | BAKERSFIELD | MODESTO | SAN LUIS OBISPO
ARCHITECTS ENGINEERS CONNECTED

VISALIA CAMPUS UNIVERSITY CENTER
COLLEGE OF THE SEQUOIAS - INCREMENT 2
915 S. MOONEY BLVD
VISALIA, CALIFORNIA

DRAWING TITLE
EXTERIOR WALL DETAILS

PROJECT NO.
22-12498

DRAWING
A822.2

PLOT DATE: 11/10/2025 9:03:03 AM

\\tet-file1\Users\tara.chong_TETR\Documents\12498-A-UC_tara.chong.rvt



HIDDEN LOK-DOWN UNIT ALLOWS PAVERS TO BE MECHANICALLY FASTENED INTO THE PEDESTAL AN SURROUNDING PAVERS.

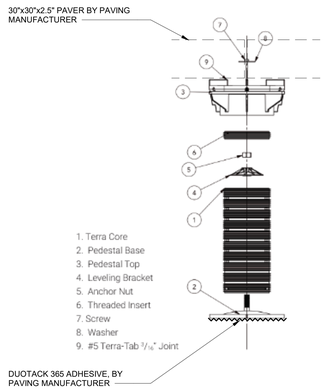

PAVING STAND MECHANISM 3" = 1'-0" | 27

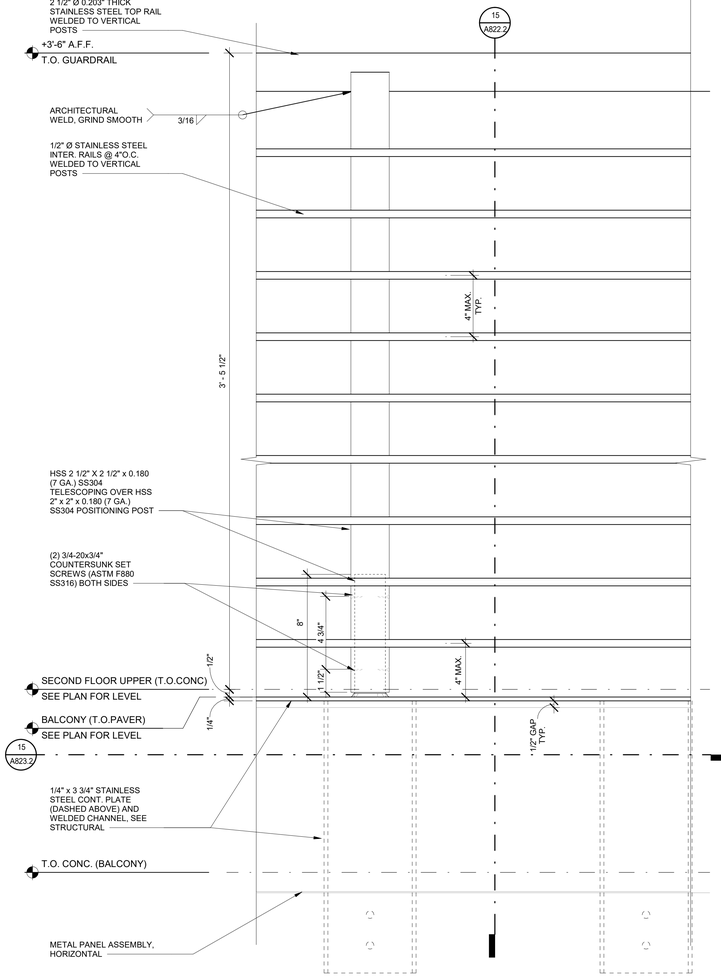

EXTERIOR BALCONY GUARDRAIL ELEVATION 3" = 1'-0" | 18

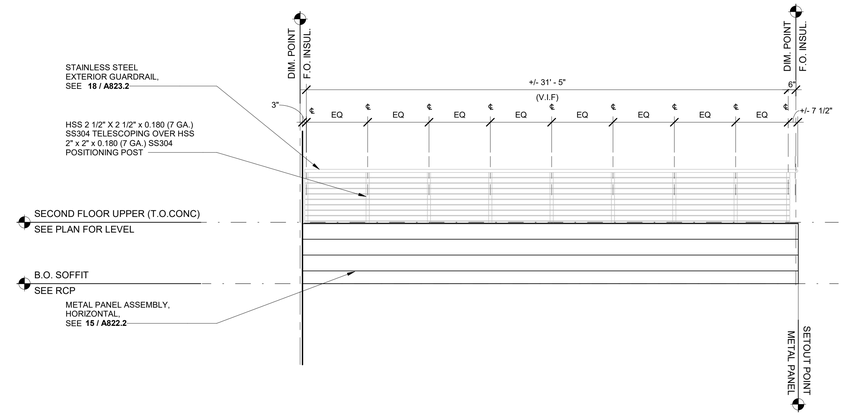

EXTERIOR BALCONY GUARDRAIL NORTH ELEVATION 1/4" = 1'-0" | 2

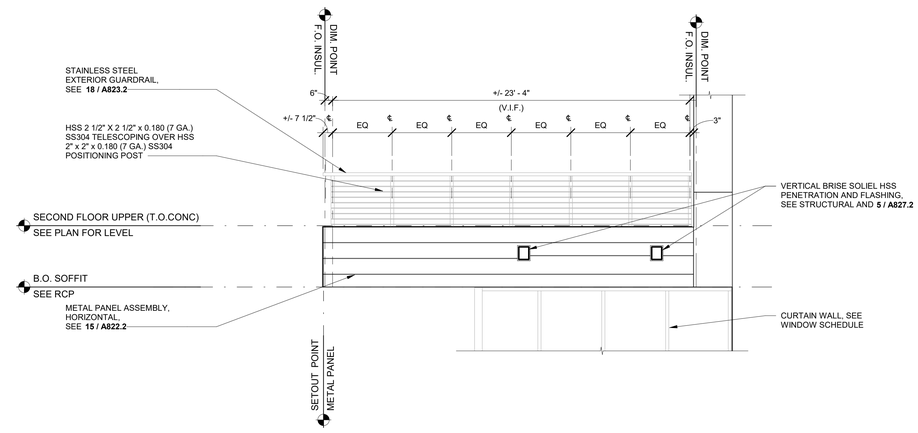

EXTERIOR BALCONY GUARDRAIL WEST ELEVATION 1/4" = 1'-0" | 3

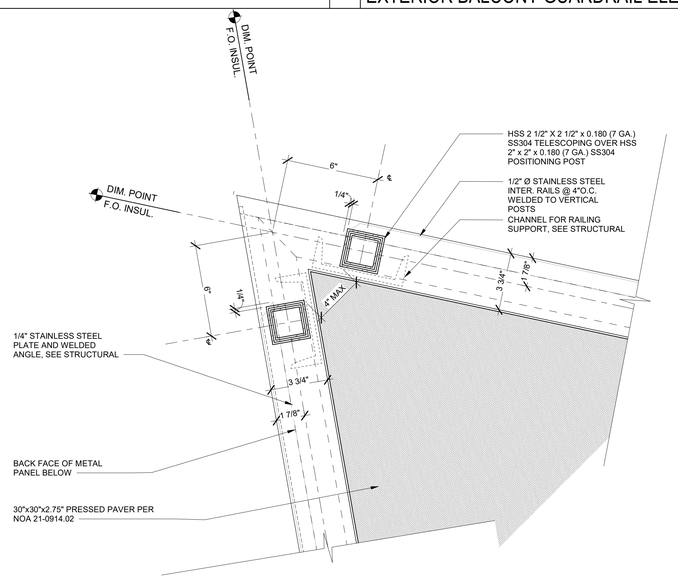

BALCONY CORNER AT GUARDRAIL 3" = 1'-0" | 25

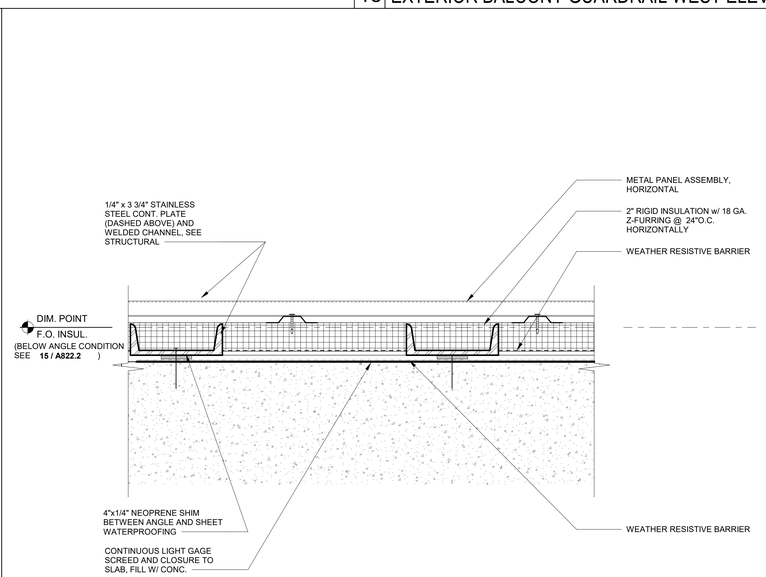

BALCONY GUARDRAIL SUPPORT AND FASTENING AT SLAB 3" = 1'-0" | 15

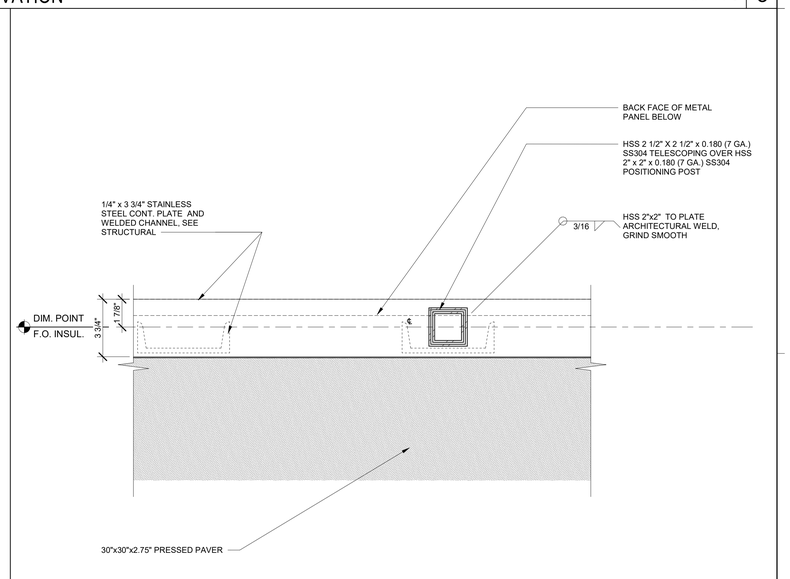

BALCONY EDGE AND GUARDRAIL 3" = 1'-0" | 5

IDENTIFICATION STAMP
DIV. OF THE STATE ARCHITECT
APP: 02-122821 INC: 2
REVIEWED FOR
SS ☑ FLS ☑ ACS ☑
DATE: 11/20/2025

Teter, Inc. expressly reserves its common law copyright and other property rights in these plans. This document, the ideas and designs incorporated herein, as an instrument of professional service, is not to be used in whole or in part, for any other project without prior written authorization.

MARK	DATE	DESCRIPTION
A.	11/13/2025	DSA BACKCHECK

LICENSED ARCHITECT JOSEPH DOUGLAS TETER No. C-29322 STATE OF CALIFORNIA

TETER, INC.
FRESNO HEADQUARTERS
VISALIA | BAKERSFIELD | MODESTO | SAN LUIS OBISPO
ARCHITECTS ENGINEERS CONNECTED
TETER

VISALIA CAMPUS UNIVERSITY CENTER
COLLEGE OF THE SEQUOIAS - INCREMENT 2
915 S. MOONEY BLVD
VISALIA, CALIFORNIA

DRAWING TITLE
EXTERIOR WALL DETAILS

PROJECT NO.
22-12498

DRAWING
A823.2

PLOT DATE: 11/10/2025 9:03:11 AM

\\tet-file1\Users\tara.chong_TETR\Documents\12498-A-UC_tara.chong.rvt

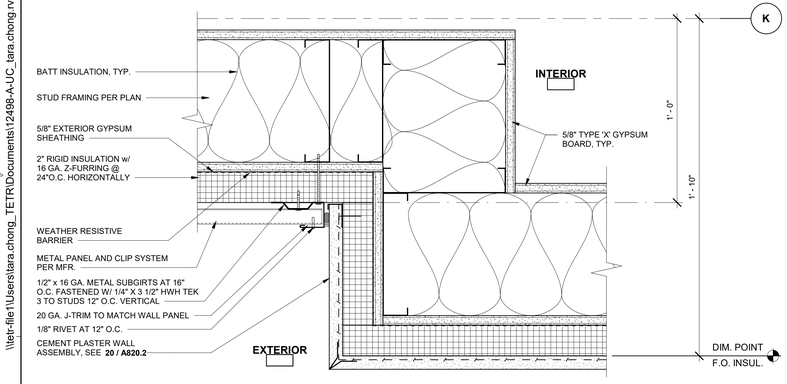

METAL PANEL AT EXTERIOR PLASTER INSIDE CORNER

3" = 1'-0" | 22

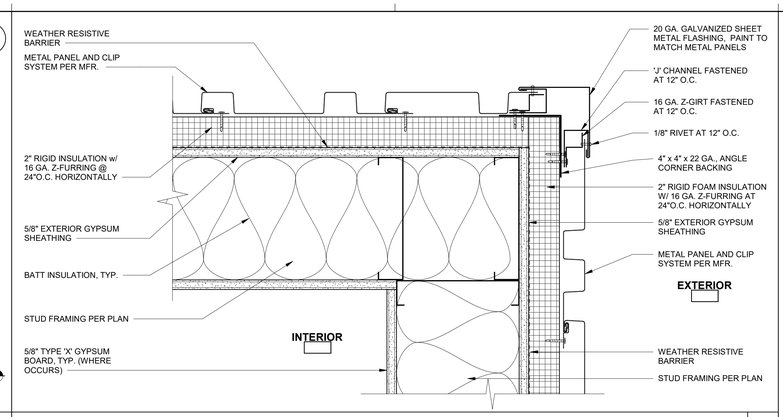

OUTSIDE CORNER AT METAL PANELS

3" = 1'-0" | 11

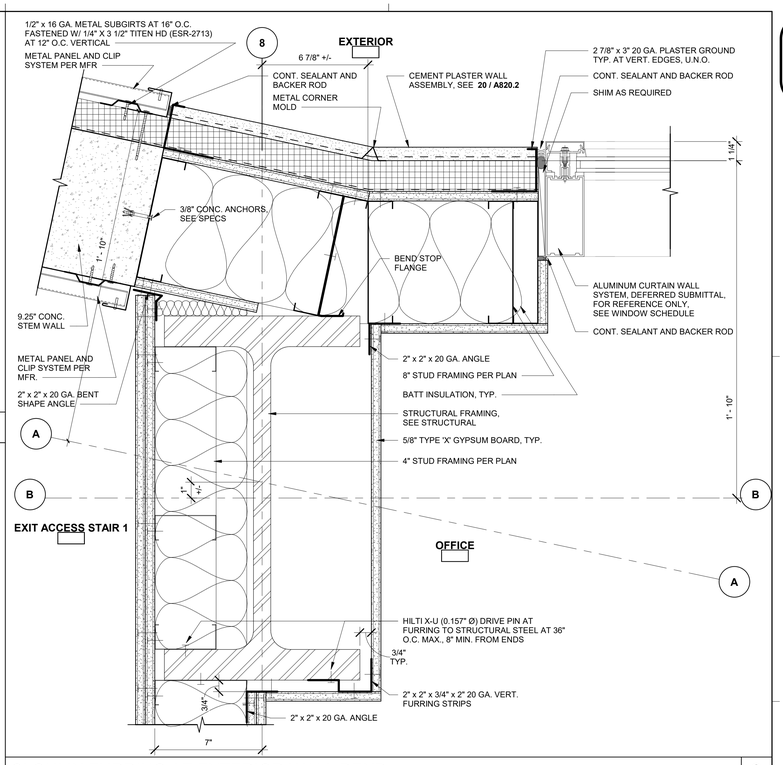

CLOUMN FURRING AT EXTERIOR WALL

3" = 1'-0" | 3

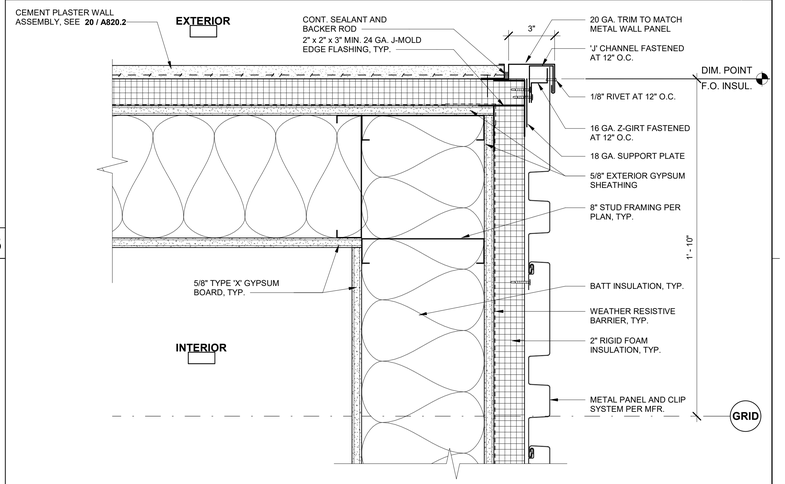

OUTSIDE CORNER OF CEMENT PLASTER

3" = 1'-0" | 4

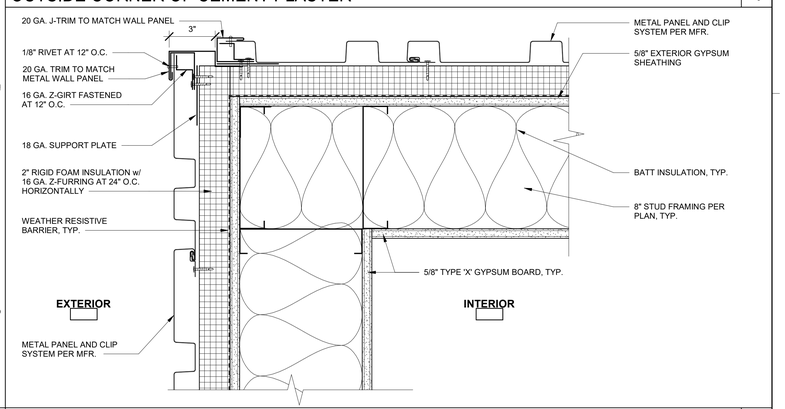

COULMN FURRING AT EXTERIOR WALL

3" = 1'-0" | 23

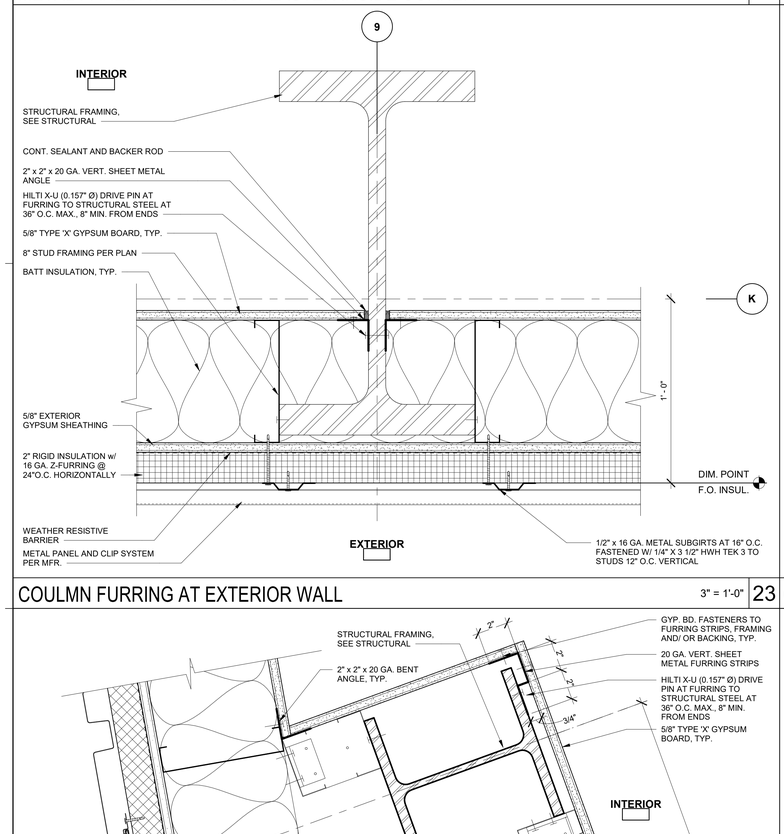

COLUMN FURRING AT COMPUTER LAB

3" = 1'-0" | 13

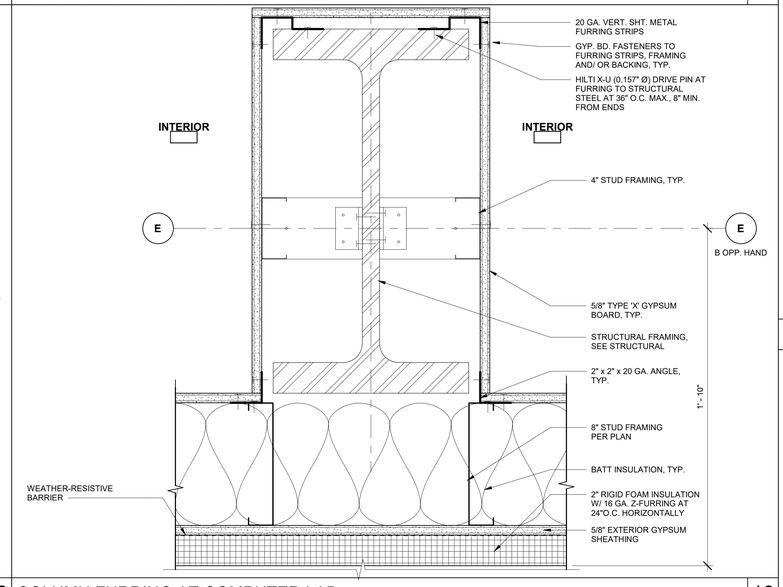

COLUMN FURRING AT METAL PANEL OUTSIDE CORNER

3" = 1'-0" | 25

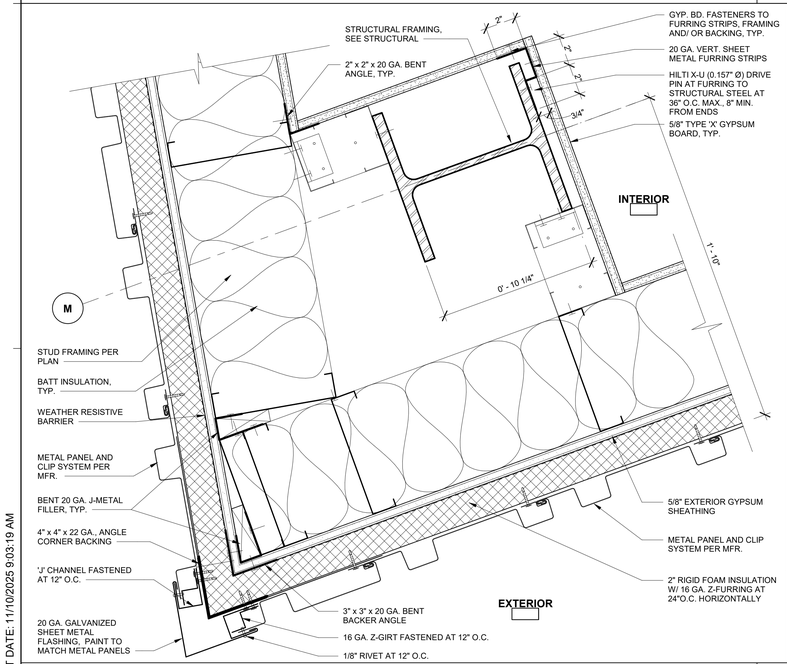

COLUMN FURRING AT METAL PANEL OUTSIDE CORNER

3" = 1'-0" | 15

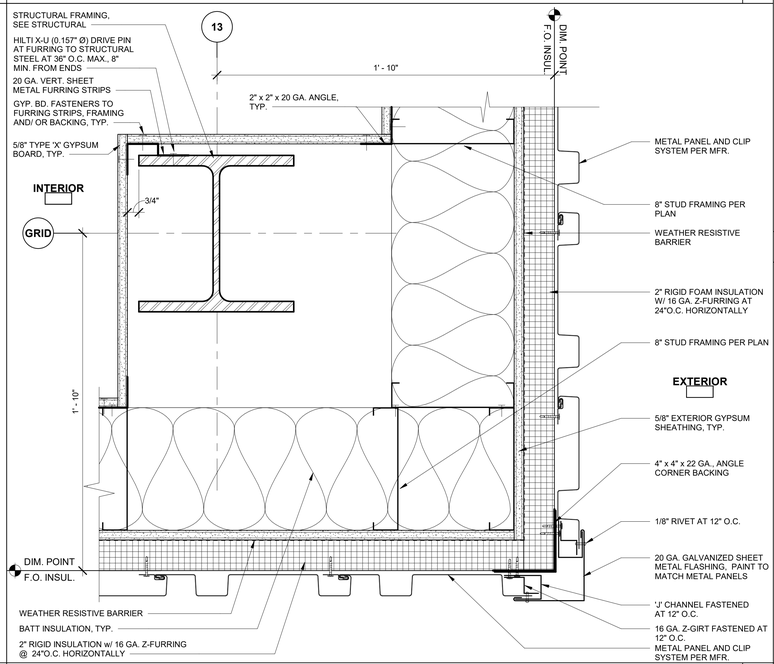

OUTSIDE CORNER AT METAL PANEL 1 AND METAL PANEL 4

3" = 1'-0" | 5

PLOT DATE: 11/10/2025 9:03:19 AM

IDENTIFICATION STAMP
DIV. OF THE STATE ARCHITECT
APP: 02-122821 INC: 2
REVIEWED FOR
SS ☑ FLS ☑ ACS ☑
DATE: 11/20/2025

MARK	DATE	DESCRIPTION
A	11/13/2025	DSA BACKCHECK

Teter, Inc. expressly reserves its common law copyright and other property rights in these plans. This document, the ideas and designs incorporated herein, as an instrument of professional service, is not to be used in whole or in part, for any other project without prior written authorization.

LICENSED ARCHITECT ★ TIMOTHY J. TETER ★ No. C-22021 ★ STATE OF CALIFORNIA

TETER, INC.
FRESNO HEADQUARTERS
VISALIA | BAKERSFIELD | MODESTO | SAN LUIS OBISPO
ARCHITECTS ENGINEERS CONNECTED

VISALIA CAMPUS UNIVERSITY CENTER
COLLEGE OF THE SEQUOIAS - INCREMENT 2
915 S. MOONEY BLVD
VISALIA, CALIFORNIA

DRAWING TITLE
EXTERIOR WALL DETAILS

PROJECT NO.
22-12498

DRAWING
A824.2

\\tet-file1\Users\tara.chong_TETR\Documents\12498-A-UC_tara.chong.rvt

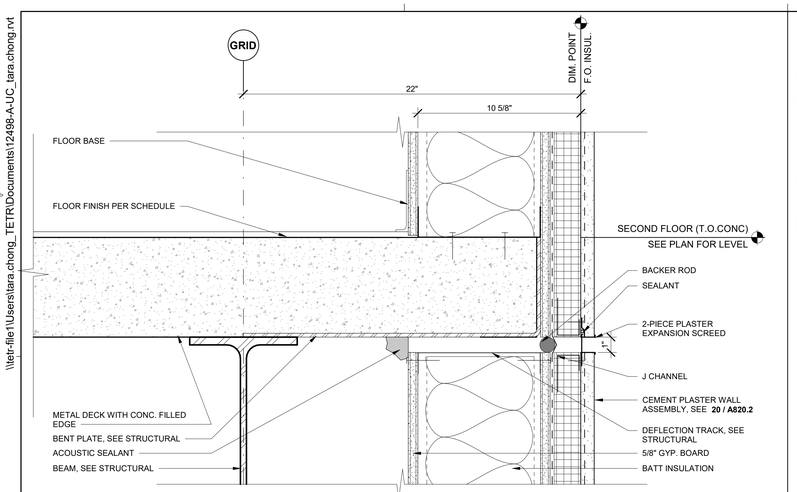

EXT. WALL AT 2F SLAB - CEMENT PLASTER

3" = 1'-0" | 22

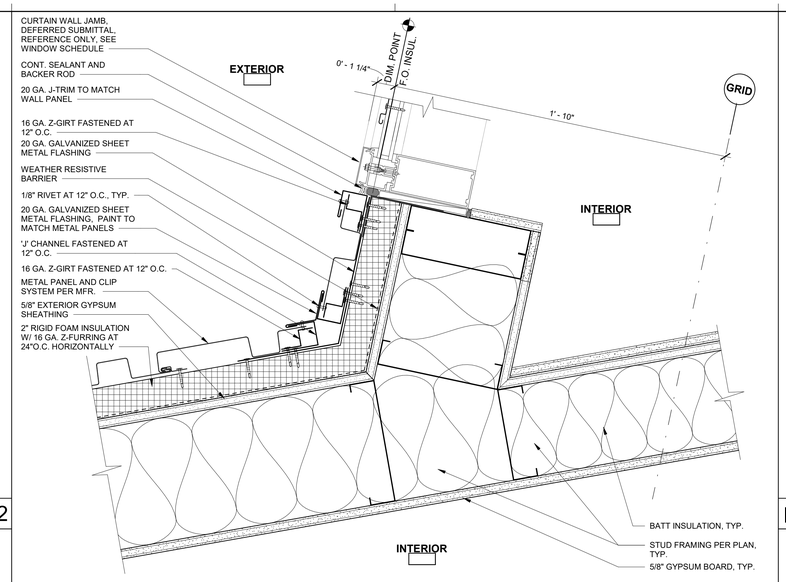

INSIDE CORNER AT METAL PANEL AND CURTAIN WALL JAMB

3" = 1'-0" | 12

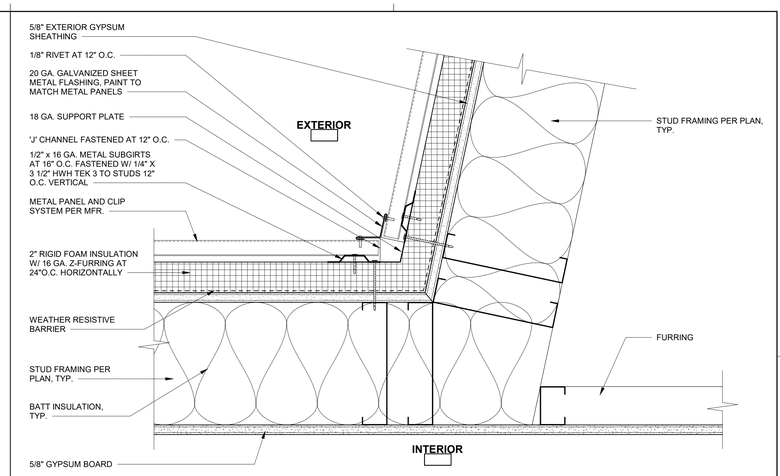

INSIDE CORNER AT HORIZ. METAL PANEL

3" = 1'-0" | 2

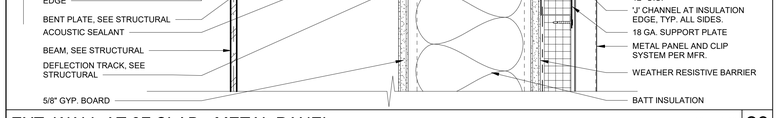

EXT. WALL AT 2F SLAB - METAL PANEL

3" = 1'-0" | 23

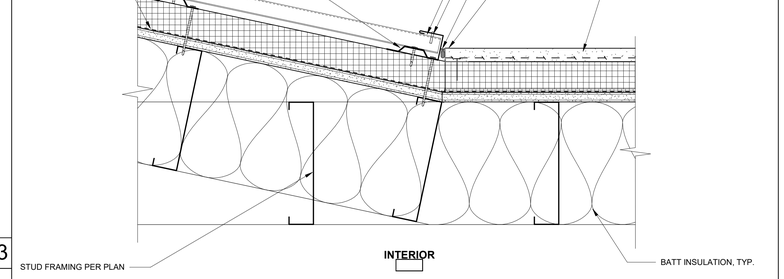

ENTRY CANOPY AT CEMENT PLASTER

3" = 1'-0" | 14

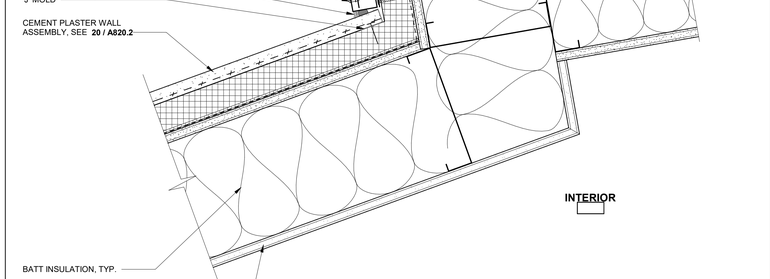

METAL PANEL AT CEMENT PLASTER

3" = 1'-0" | 4

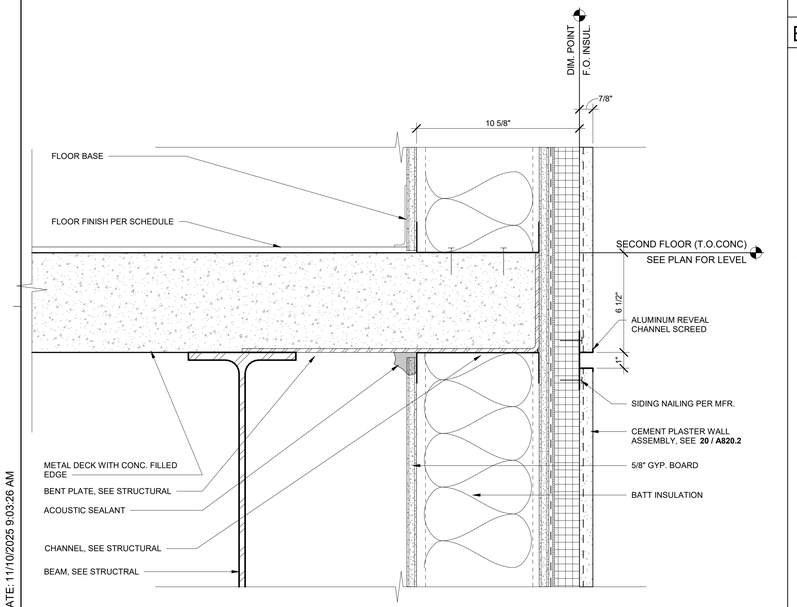

EXT. WALL AT OVERHANG

3" = 1'-0" | 25

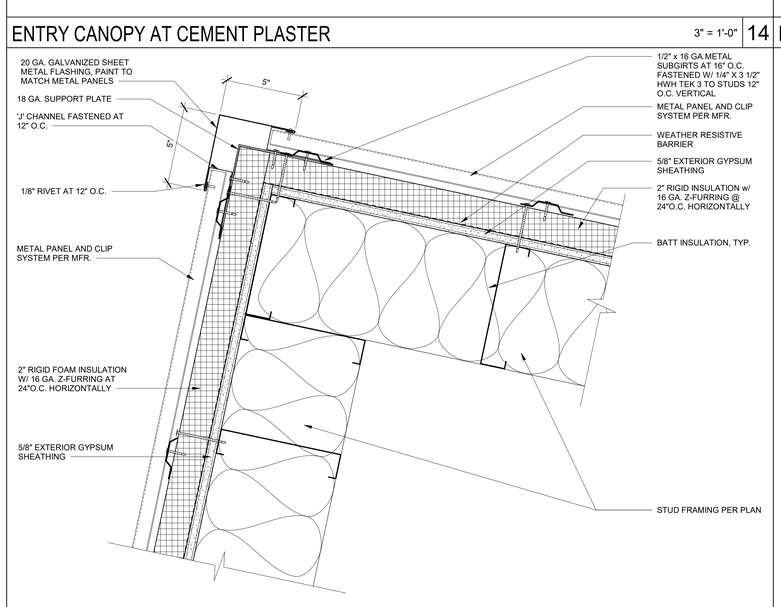

ENTRY CANOPY OUTSIDE CORNER

3" = 1'-0" | 15

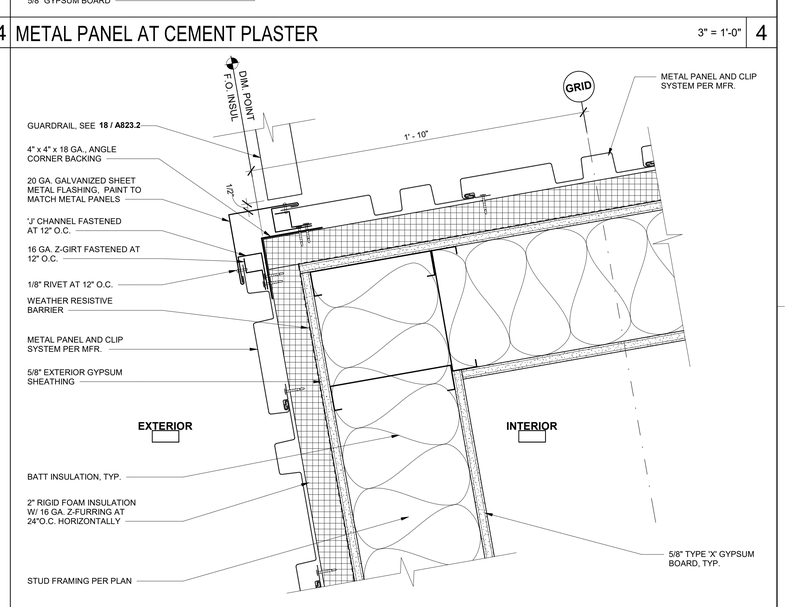

METAL PANEL AT BALCONY RAILING

3" = 1'-0" | 5

PLOT DATE: 11/10/2025 9:03:26 AM

IDENTIFICATION STAMP
DIV. OF THE STATE ARCHITECT
APP: 02-122821 INC: 2
REVIEWED FOR
SS ☑ FLS ☑ ACS ☑
DATE: 11/20/2025

Teter, Inc. expressly reserves its common law copyright and other property rights in these plans. This document, the ideas and designs incorporated herein, as an instrument of professional service, is not to be used in whole or in part, for any other project without prior written authorization.

MARK	DATE	DESCRIPTION
A	11/13/2025	DSA BACKCHECK

TETER, INC.
FRESNO HEADQUARTERS
VISALIA | BAKERSFIELD | MODESTO | SAN LUIS OBISPO
ARCHITECTS ENGINEERS CONNECTED

VISALIA CAMPUS UNIVERSITY CENTER
COLLEGE OF THE SEQUOIAS - INCREMENT 2
915 S. MOONEY BLVD
VISALIA, CALIFORNIA

DRAWING TITLE
EXTERIOR WALL DETAILS

PROJECT NO.
22-12498

DRAWING
A825.2

\\tet-file1\Users\tara.chong_TETR\Documents\12498-A-UC_tara.chong.rvt

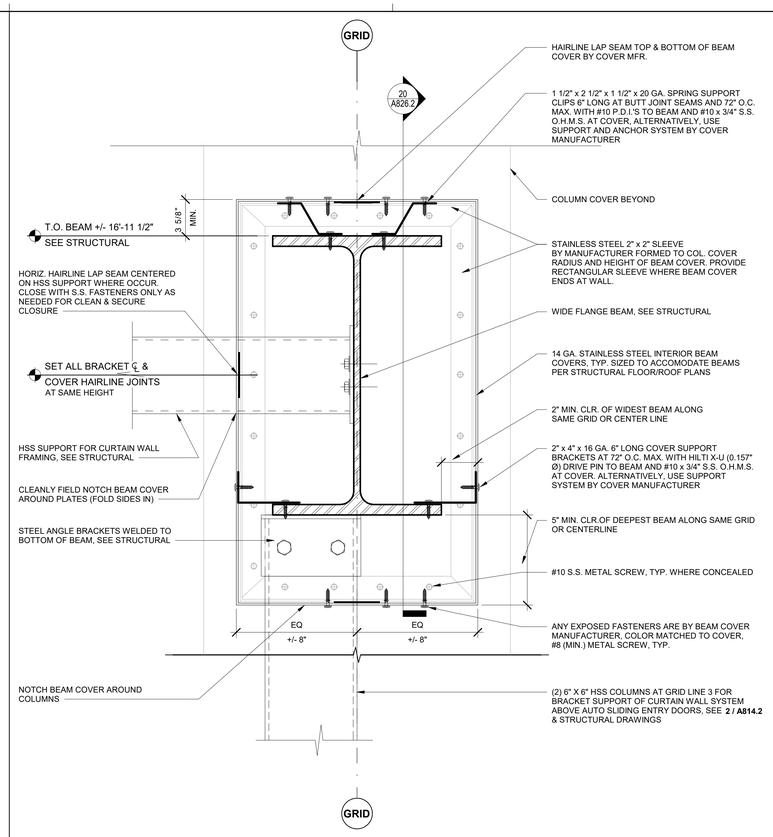

INTERIOR BEAM COVERS — 3" = 1'-0" | 18

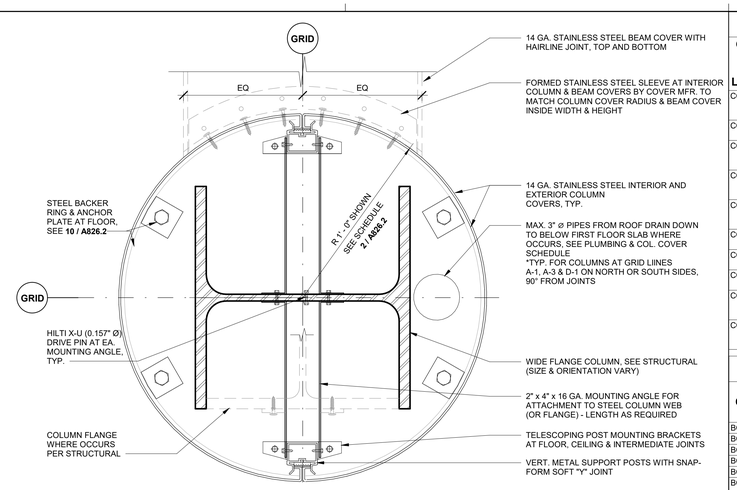

TYP. COLUMN COVER - (3) EXTERIOR & (7) INTERIOR, SEE SCHEDULE (DETAIL 1) — 3" = 1'-0" | 7

COLUMN COVER SCHEDULE

COLUMN NO. & GRID LOCATION	COL. SIZE	SPAN	COVER RADIUS	REMARKS/ APPROX. HT.	FINISH
CC-1, A-1	W14x90	1ST FLR TO 2ND FLR CLG.	12" R	EXTERIOR, RWL PIPE (NORTH SIDE) 33' - 0 1/2" V.I.F.	14 GA. S.S.
CC-2, C-1	W14x90	1ST FLR TO 2ND FLR CLG.	12" R	EXTERIOR, 33' - 0 1/2" V.I.F.	14 GA. S.S.
CC-3, D-1	W14x90	1ST FLR TO 2ND FLR CLG.	12" R	EXTERIOR, RWL PIPE (SOUTH SIDE) 33' - 0 1/2" V.I.F.	14 GA. S.S.
CC-4, A-3	W10x60	1ST FLR TO 2ND FLR CLG.	12" R	INTERIOR, RWL PIPE (NORTH SIDE) 33' - 0 1/2" V.I.F.	14 GA. S.S.
CC-5, A-6	W10x60	1ST FLR TO 2ND FLR CLG.	12" R	INTERIOR, SET BOTTOM ON BLEACHERS, 31'-4 3/4" V.I.F.	14 GA. S.S.
CC-6, C-3	W14x90	1ST FLR TO 2ND FLR CLG.	12" R	INTERIOR, 33' - 0 1/2" V.I.F.	14 GA. S.S.
CC-7, C-6	W10x60	1ST FLR TO 2ND FLR CLG.	12" R	INTERIOR, 33' - 0 1/2" V.I.F.	14 GA. S.S.
CC-8, D-3	W8x48	2ND FLOOR TO 2ND FLR CLG.	12" R	INTERIOR, 11' - 0 1/2" V.I.F.	14 GA. S.S.
CC-9, G-5	W21x248	2ND FLOOR TO 2ND FLR CLG.	16" R	INTERIOR, 11' - 0" V.I.F.	ALUMINUM, 3 COAT PAINT FINISH *
CC-10, G-7	W21x248	2ND FLOOR TO 2ND FLR CLG.	16" R	INTERIOR, 13' - 6" V.I.F. (FROM SECOND FLOOR LOWER)	14 GA. S.S.

BEAM COVER SCHEDULE

COVER NO. & GRID LOC'N	BEAM SIZE (VERIFY)	BEAM TOP HEIGHT	APPROX. COVER LENGTH	APPROX. COVER HTxW	FINISH
BC-1, GRID 2, EXT.	W24x84	37'-9"	14'-0" ± V.I.F.	2'-3"x1'-0"	14 GA. S.S.
BC-2, GRID 3, INT.	W18x76	16'-11 1/2"	27'-10" ± V.I.F.	2'-4"x1'-3"	14 GA. S.S.
BC-3, GRID 3, INT.	W18x76	16'-11 1/2"	26'-6" ± V.I.F.	2'-4"x1'-3"	14 GA. S.S.
BC-4, GRID A, INT.	W18x76	16'-11 1/2"	35'-2" ± V.I.F.	2'-4"x1'-3"	14 GA. S.S.
BC-5,GRID A, INT.	W18x76	16'-11 1/2"	22'-0" ± V.I.F.	2'-4"x1'-3"	14 GA. S.S.
BC-6, GRID B, EXT.	W24x55	16'-7 1/2"	6'-1" ± V.I.F.	2'-9"x1'-0"	ALUMINUM, 3 COAT PAINT FINISH *
BC-7, GRID13, EXT.	W18x211	16'-11 1/2"	27'-1" ± V.I.F.	2'-6"x1'-4"	14 GA. S.S.
BC-8, GRID 13, EXT.	W18x211	+/-37'-0"	29'-8" ± V.I.F.	2'-6"x1'-4"	14 GA. S.S.

* COLOR TO BE SELECTED BY ARCHITECT

COLUMN AND BEAM COVER SCHEDULES — N.T.S. | 2

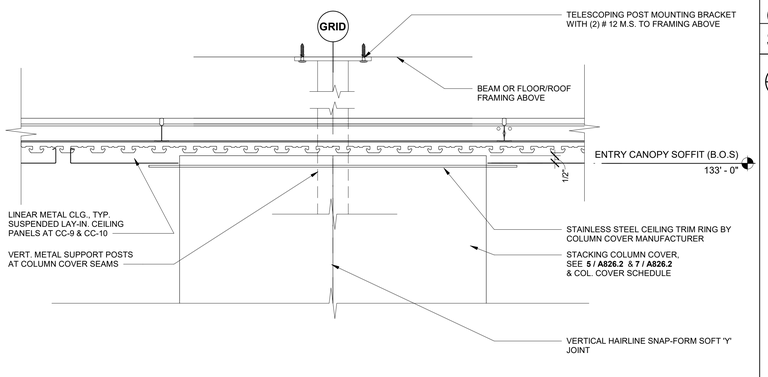

COLUMN COVER AT CEILING — 3" = 1'-0" | 8

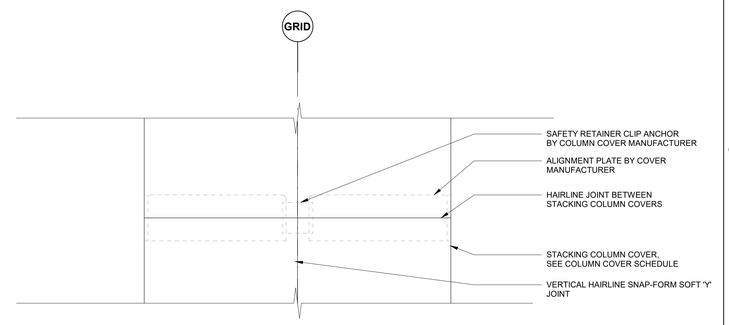

COLUMN COVER HORIZONTAL STACKING JOINTS — 3" = 1'-0" | 9

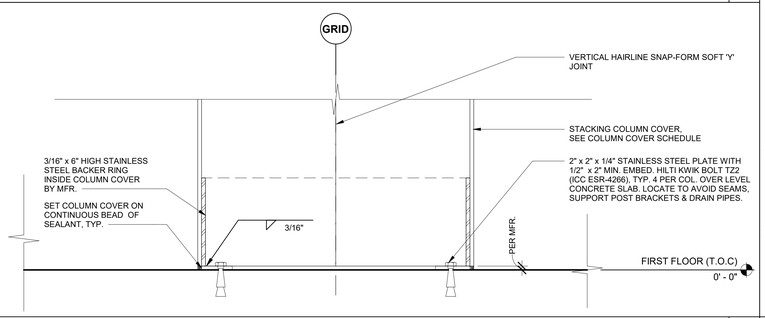

COLUMN COVER AT BASE — 3" = 1'-0" | 10

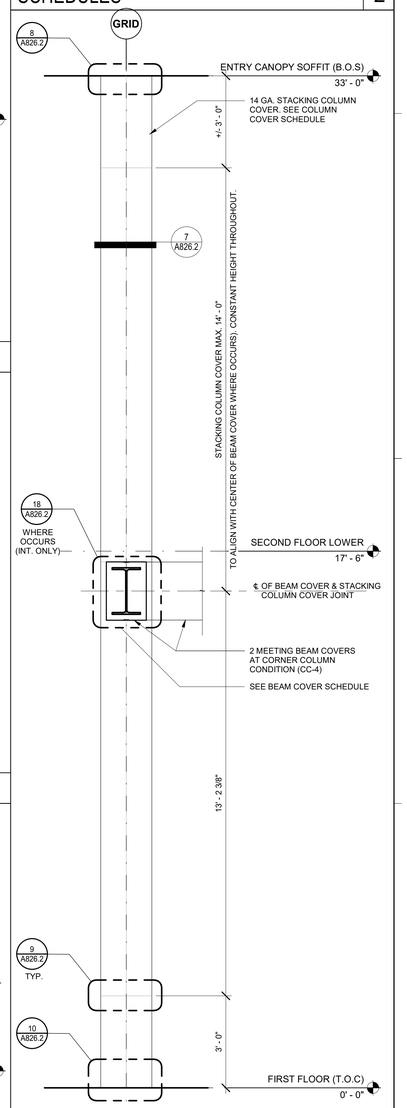

COLUMN COVER ELEVATION — 1/2" = 1'-0" | 5

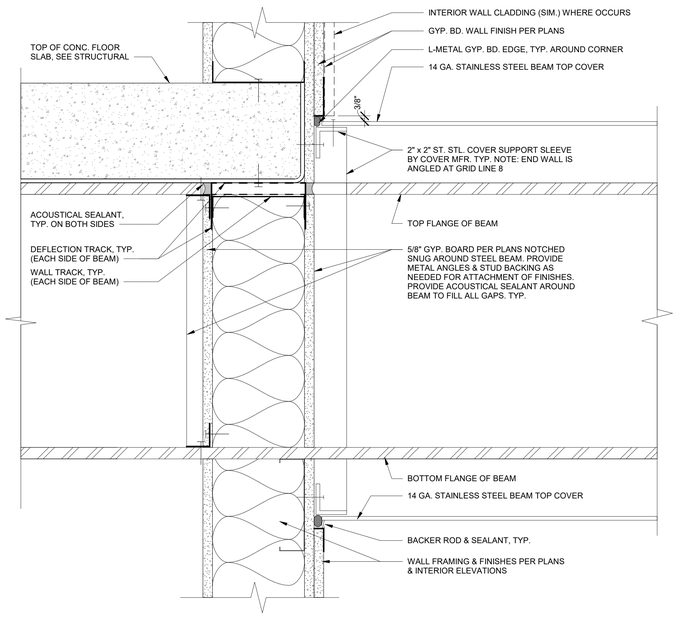

INTERIOR WALL FINISH AT BEAM COVER ENDS (GRID D & 8 WALL LINES) — 3" = 1'-0" | 20

IDENTIFICATION STAMP
DIV. OF THE STATE ARCHITECT
APP: 02-122821 INC: 2
REVIEWED FOR
SS ☑ FLS ☑ ACS ☑
DATE: 11/20/2025

Teter, Inc. expressly reserves its common law copyright and other property rights in these plans. This document, the ideas and designs incorporated herein, as an instrument of professional service, is not to be used in whole or in part, for any other project without prior written authorization.

MARK	DATE	DESCRIPTION
A	11/13/2025	DSA BACKCHECK

LICENSED ARCHITECT ★ STATE OF CALIFORNIA ★ CHRISTOPHER J. TETER ★ C-23021 ★ REGISTERED PROFESSIONAL ENGINEER ★ STATE OF CALIFORNIA ★ CIVIL ★ C-72521 ★ EXPIRES 12/31/2026

TETER, INC.
FRESNO HEADQUARTERS
VISALIA | BAKERSFIELD | MODESTO | SAN LUIS OBISPO
ARCHITECTS ENGINEERS CONNECTED

VISALIA CAMPUS UNIVERSITY CENTER
COLLEGE OF THE SEQUOIAS - INCREMENT 2
915 S. MOONEY BLVD
VISALIA, CALIFORNIA

DRAWING TITLE
EXTERIOR WALL DETAILS

PROJECT NO.
22-12498

DRAWING
A826.2

PLOT DATE: 11/10/2025 9:03:41 AM

\\tet-file1\Users\tara.chong_TETR\Documents\12498-A-UC_tara.chong.rvt

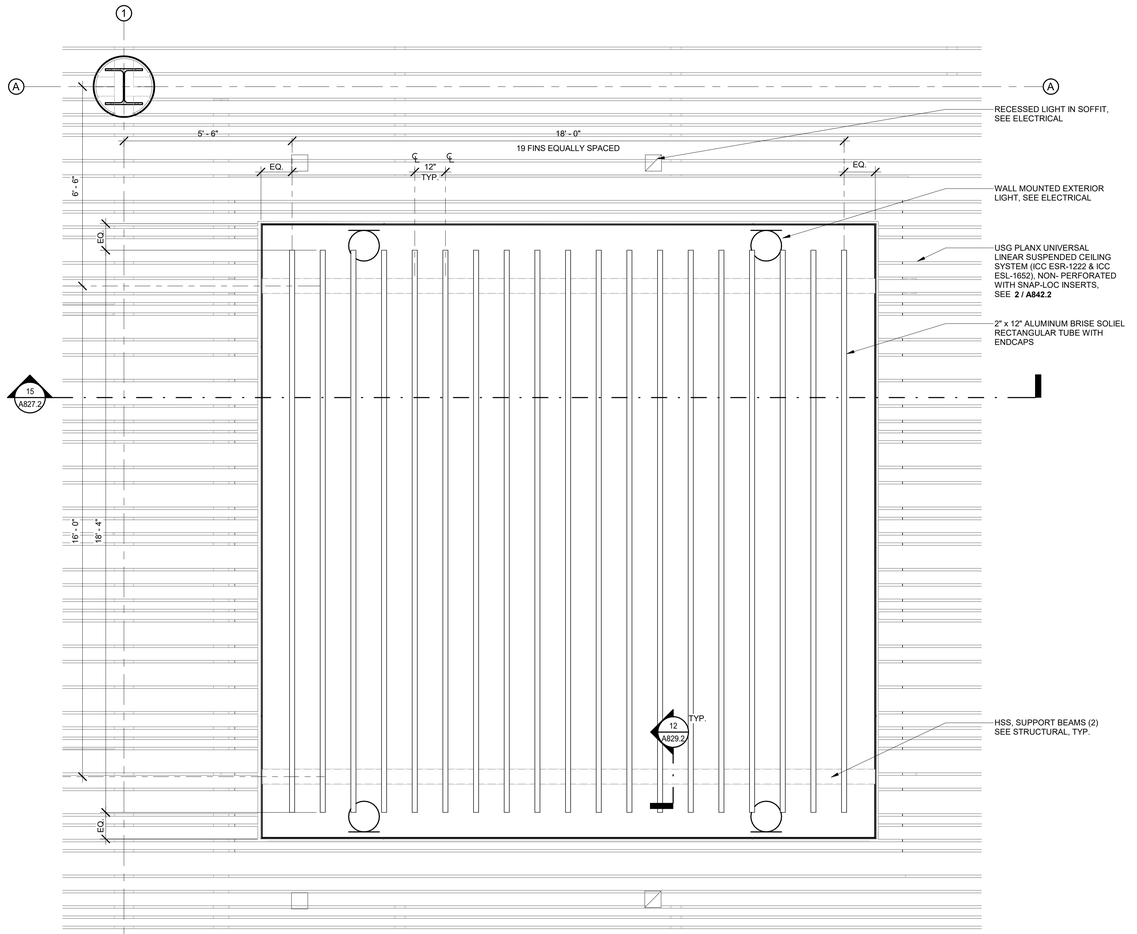

REFLECTED CEILING PLAN ENLARGEMENT - HORIZONTAL BRISE SOLIEL 1/2" = 1'-0" | 12

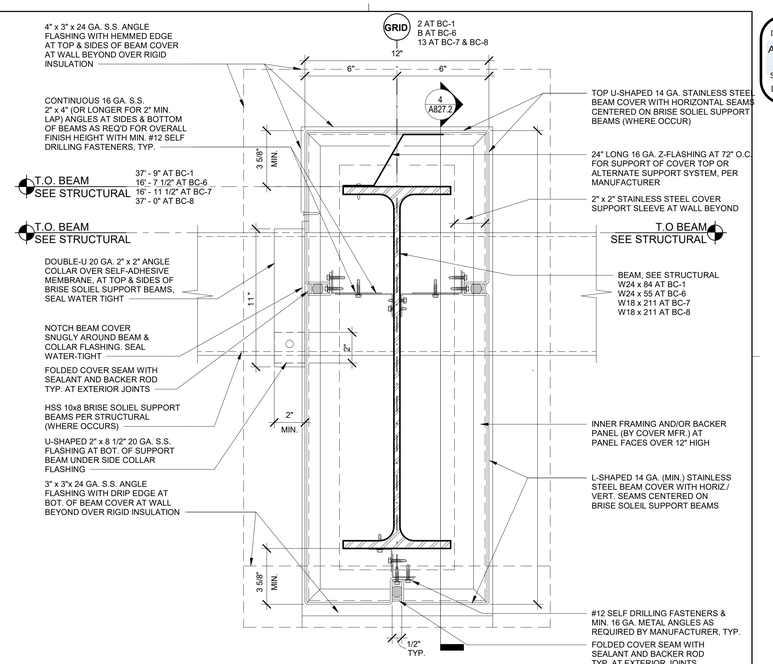

EXTERIOR BEAM COVERS & PENETRATIONS AT BRISE SOLIEL SUPPORT BEAMS 3" = 1'-0" | 2

SECTION - HORIZONTAL BRISE SOLIEL 1/2" = 1'-0" | 15

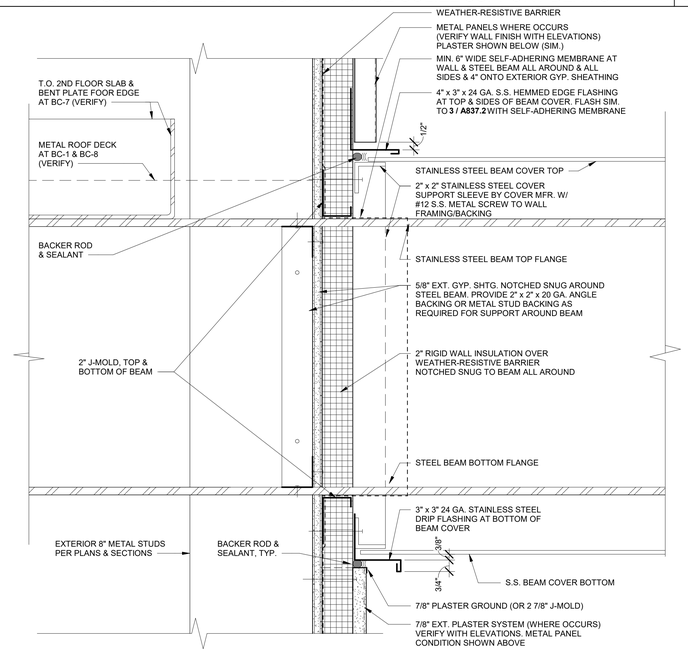

EXTERIOR WALL FINISH AT BEAM COVER ENDS 3" = 1'-0" | 4

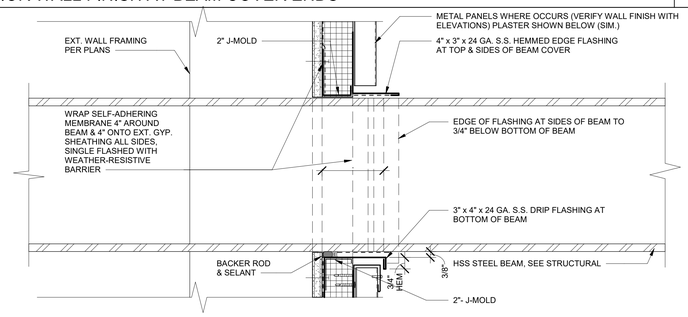

EXTERIOR METAL PANELS AT EXPOSED BEAM PENETRATIONS (PLASTER SIM.) 3" = 1'-0" | 5

IDENTIFICATION STAMP
DIV. OF THE STATE ARCHITECT
APP: 02-122821 INC: 2
REVIEWED FOR
SS ☑ FLS ☑ ACS ☑
DATE: 11/20/2025

Teter, Inc. expressly reserves its common law copyright and other property rights in these plans. This document, the ideas and designs incorporated herein, as an instrument of professional service, is not to be used in whole or in part, for any other project without prior written authorization.

MARK	DATE	DESCRIPTION
A.	11/13/2025	DSA BACKCHECK

LICENSED ARCHITECT CHRISTOPHER CHARLES TETER No. C-29220 STATE OF CALIFORNIA

TETER, INC.
FRESNO HEADQUARTERS
VISALIA | BAKERSFIELD | MODESTO | SAN LUIS OBISPO
ARCHITECTS ENGINEERS CONNECTED

VISALIA CAMPUS UNIVERSITY CENTER
COLLEGE OF THE SEQUOIAS - INCREMENT 2
915 S. MOONEY BLVD
VISALIA, CALIFORNIA

DRAWING TITLE
EXTERIOR WALL DETAILS

PROJECT NO.
22-12498

DRAWING
A827.2

PLOT DATE: 11/10/2025 9:03:52 AM

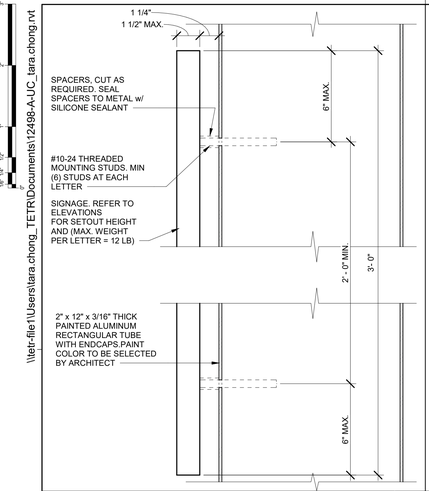

EXTERIOR SIGNAGE AT VERTICAL FINS — 3" = 1'-0" — 27

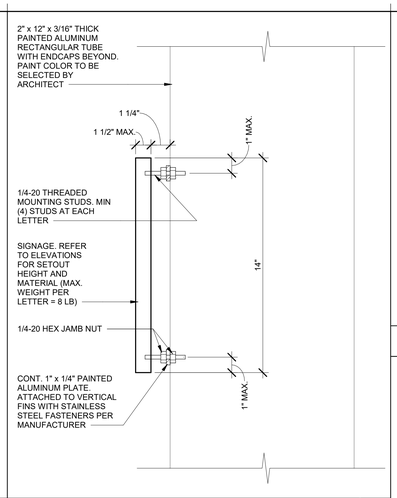

EXTERIOR SIGNAGE AT VERTICAL FINS — 3" = 1'-0" — 22

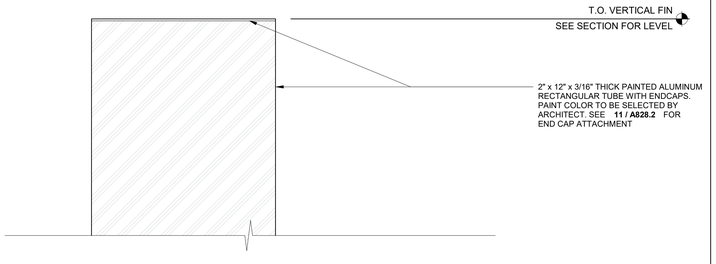

VERTICAL FIN - END — 3" = 1'-0" — 23

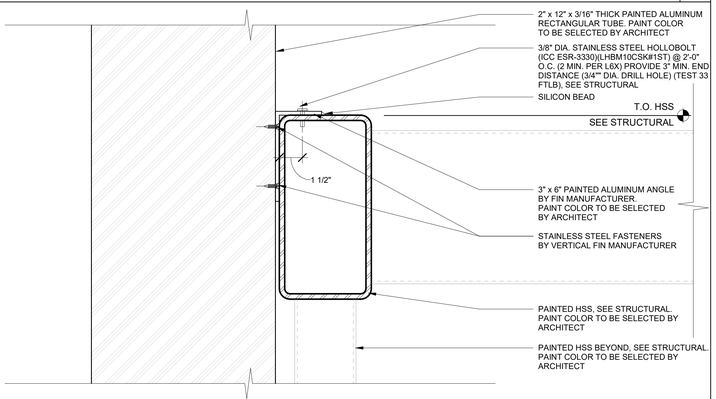

VERTICAL FIN AT HSS — 3" = 1'-0" — 24

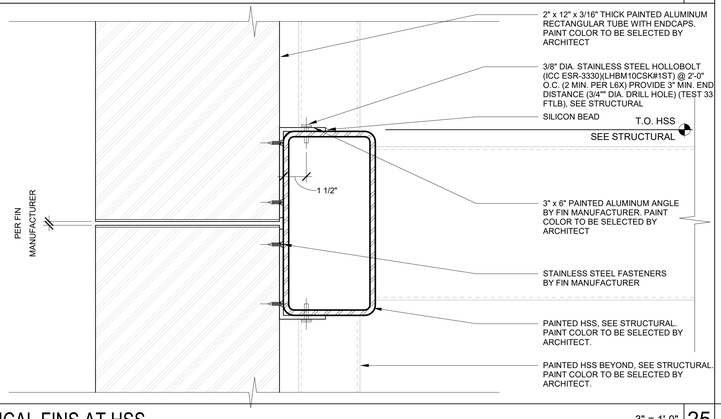

VERTICAL FINS AT HSS — 3" = 1'-0" — 25

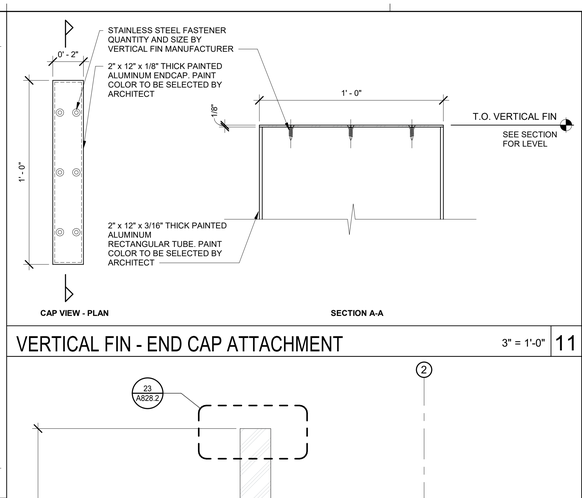

VERTICAL FIN - END CAP ATTACHMENT — 3" = 1'-0" — 11

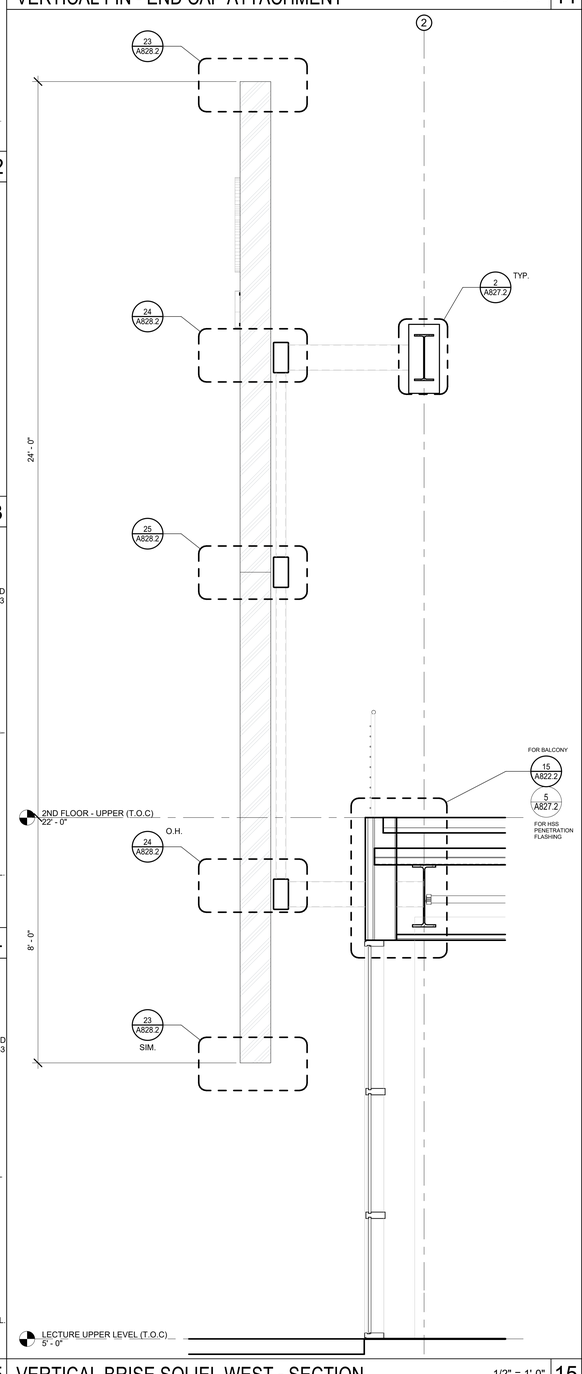

VERTICAL BRISE SOLIEL WEST - SECTION — 1/2" = 1'-0" — 15

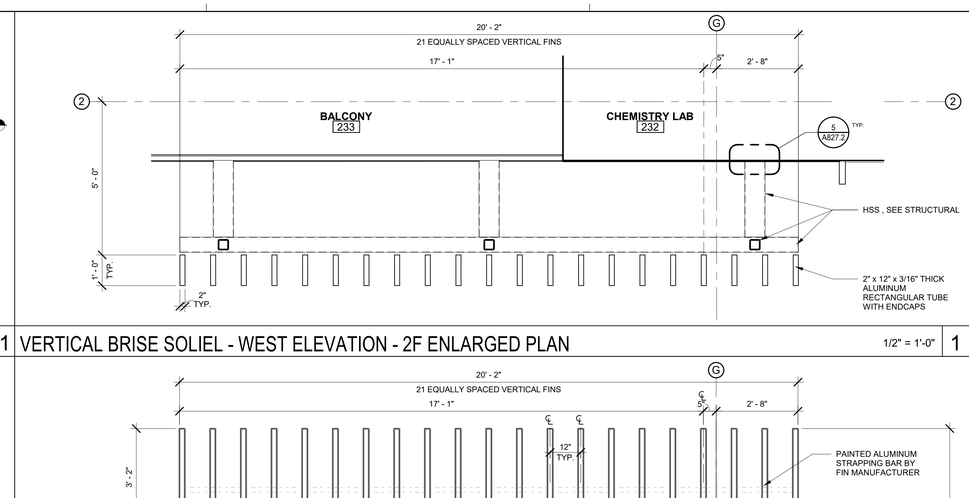

VERTICAL BRISE SOLIEL - WEST ELEVATION - 2F ENLARGED PLAN — 1/2" = 1'-0" — 1

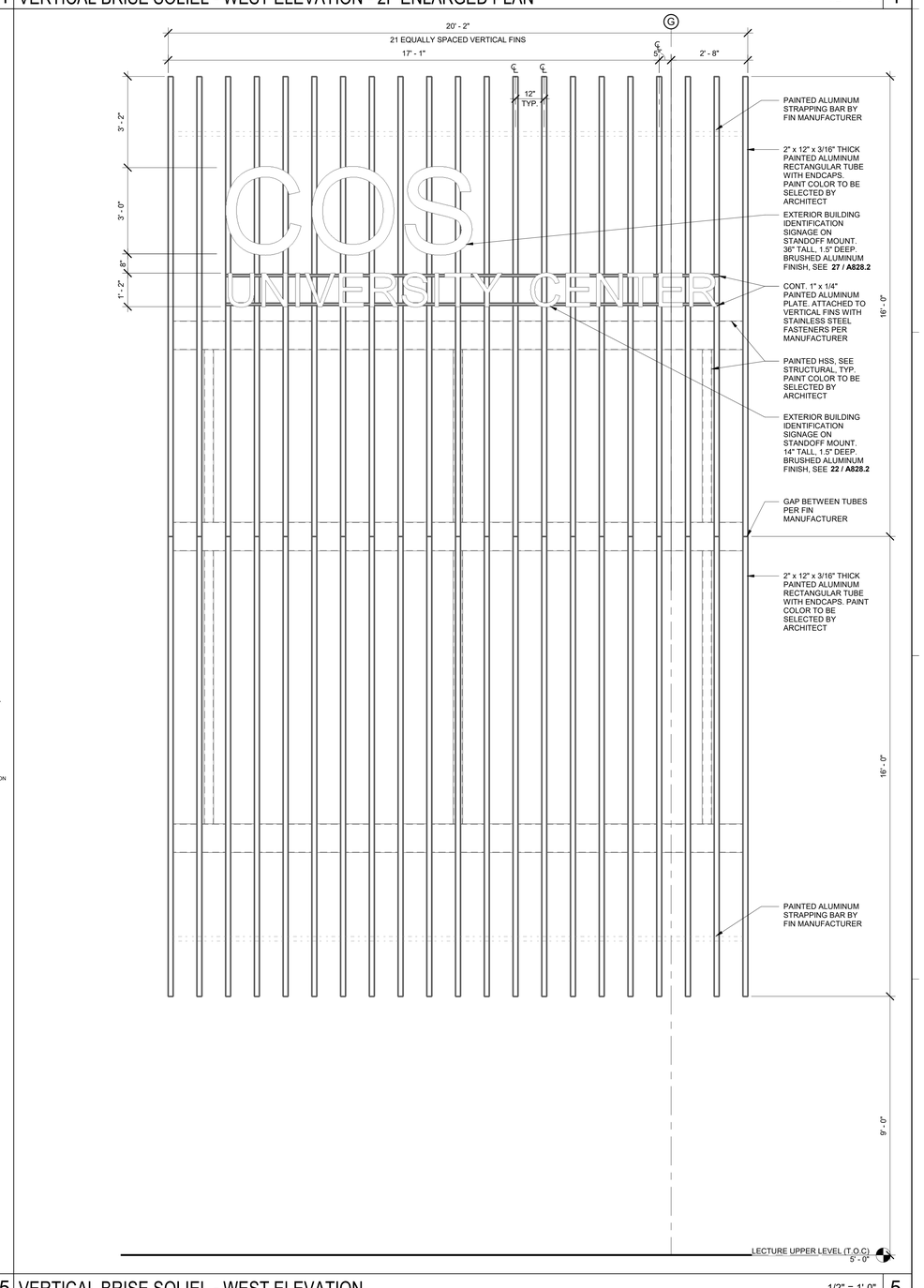

VERTICAL BRISE SOLIEL - WEST ELEVATION — 1/2" = 1'-0" — 5

IDENTIFICATION STAMP
DIV. OF THE STATE ARCHITECT
APP: 02-122821 INC: 2
REVIEWED FOR
SS ☑ FLS ☑ ACS ☑
DATE: 11/20/2025

Teter, Inc. expressly reserves its common law copyright and other property rights in these plans. This document, the ideas and designs incorporated herein, as an instrument of professional service, is not to be used in whole or in part, for any other project without prior written authorization.

MARK	DATE	DESCRIPTION
A	11/13/2025	DSA BACKCHECK

LICENSED ARCHITECT — CONSULTANT — STATE OF CALIFORNIA

TETER, INC.
ARCHITECTS ENGINEERS CONNECTED
FRESNO HEADQUARTERS
VISALIA | BAKERSFIELD | MODESTO | SAN LUIS OBISPO

TETER

VISALIA CAMPUS UNIVERSITY CENTER
COLLEGE OF THE SEQUOIAS - INCREMENT 2
915 S. MOONEY BLVD
VISALIA, CALIFORNIA

DRAWING TITLE
EXTERIOR WALL DETAILS

PROJECT NO.
22-12498

DRAWING
A828.2

\\tet-file1\Users\tara.chong_TETR\Documents\12498-A-UC_tara.chong.rvt
PLOT DATE: 11/10/2025 9:04:04 AM

\\tet-file1\Users\tara.chong_TETR\Documents\12498-A-UC_tara.chong.rvt
PLOT DATE: 11/10/2025 9:04:14 AM

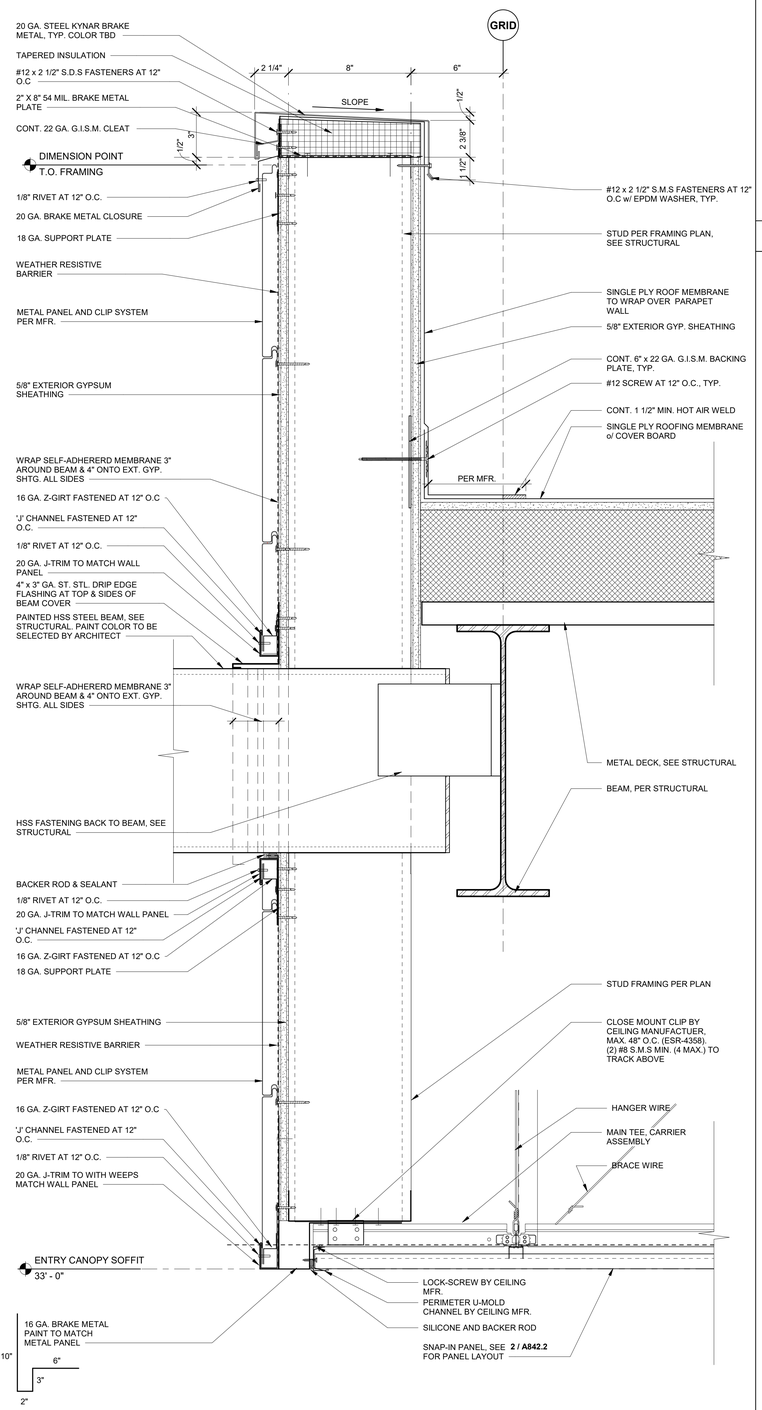

EXT. WALL AT CANOPY OPENING — 3" = 1'-0" — 20

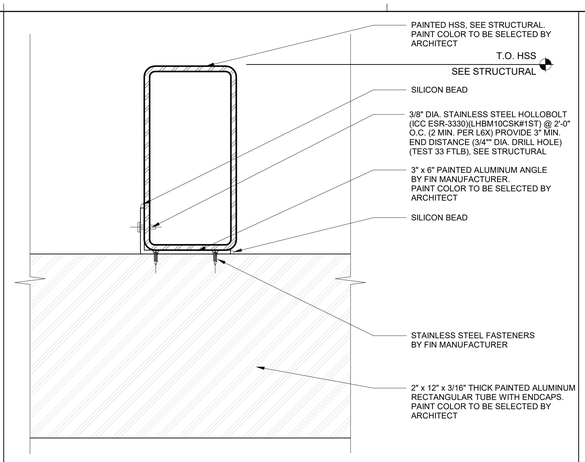

HORIZONTAL FIN FASTENING TO HSS — 3" = 1'-0" — 12

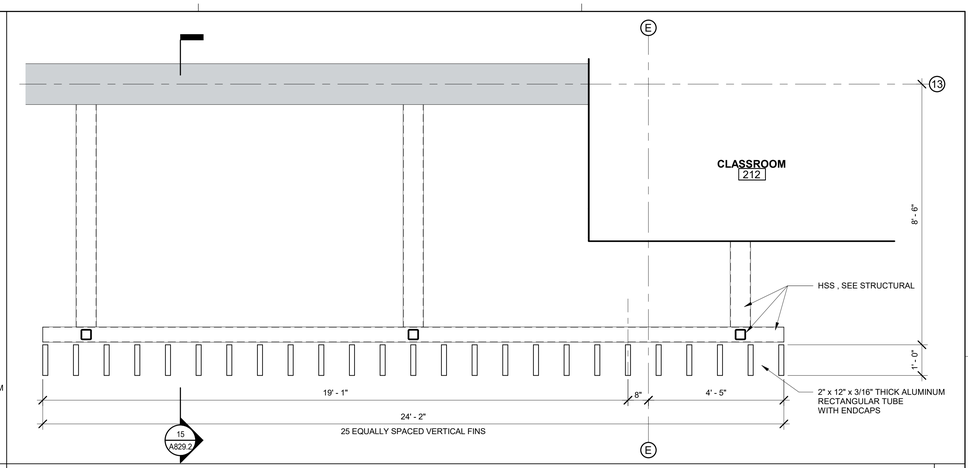

VERTICAL BRISE SOLIEL - EAST ELEVATION - ENLARGED PLAN — 1/2" = 1'-0" — 2

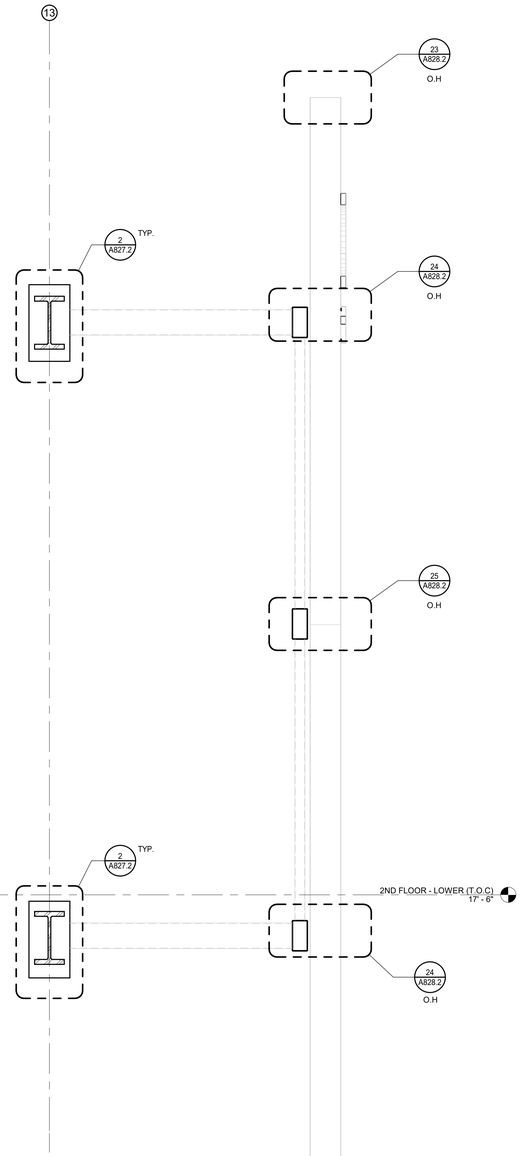

VERTICAL BRISE SOLIEL EAST - SECTION — 1/2" = 1'-0" — 15

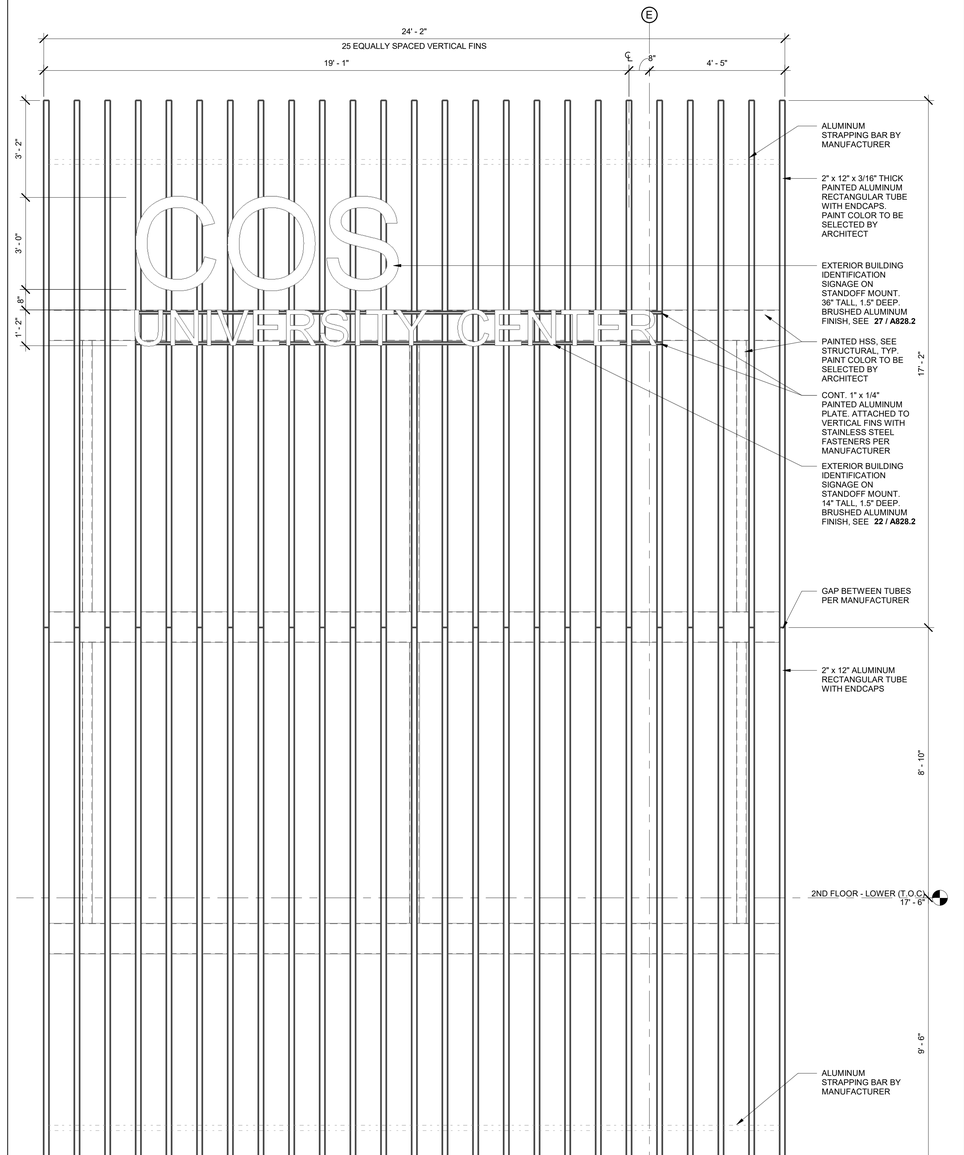

VERTICAL BRISE SOLIEL - EAST ELEVATION — 1/2" = 1'-0" — 5

IDENTIFICATION STAMP
DIV. OF THE STATE ARCHITECT
APP: 02-122821 INC: 2
REVIEWED FOR
SS ☑ FLS ☑ ACS ☑
DATE: 11/20/2025

Teter, Inc. expressly reserves its common law copyright and other property rights in these plans. This document, the ideas and designs incorporated herein, as an instrument of professional service, is not to be used in whole or part, for any other project without prior written authorization.

MARK	DATE	DESCRIPTION
A	11/13/2025	DSA BACKCHECK

LICENSED ARCHITECT — STATE OF CALIFORNIA — CHRISTOPHER COLE PETER — EXPIRATION 08-31-2027

TETER, INC.
FRESNO HEADQUARTERS
VISALIA | BAKERSFIELD | MODESTO | SAN LUIS OBISPO
ARCHITECTS ENGINEERS CONNECTED

VISALIA CAMPUS UNIVERSITY CENTER
COLLEGE OF THE SEQUOIAS - INCREMENT 2
915 S. MOONEY BLVD
VISALIA, CALIFORNIA

DRAWING TITLE
EXTERIOR WALL DETAILS

PROJECT NO.
22-12498

DRAWING
A829.2

\\tet-file1\Users\tara.chong_TETR\Documents\12498-A-UC_tara.chong.rvt

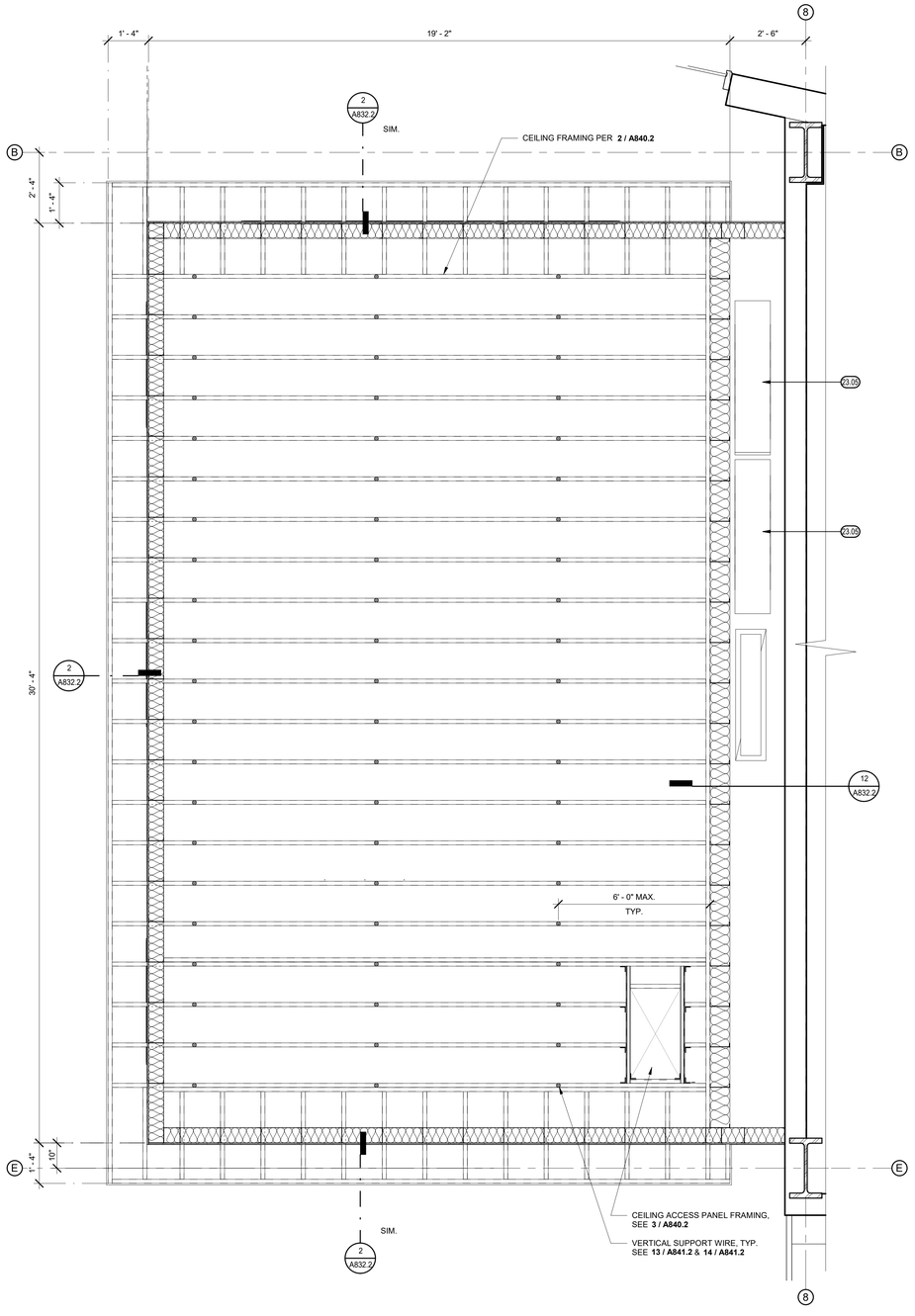

CEILING FRAMING PLAN - LOBBY FEATURE WALL 1/2" = 1'-0" 19

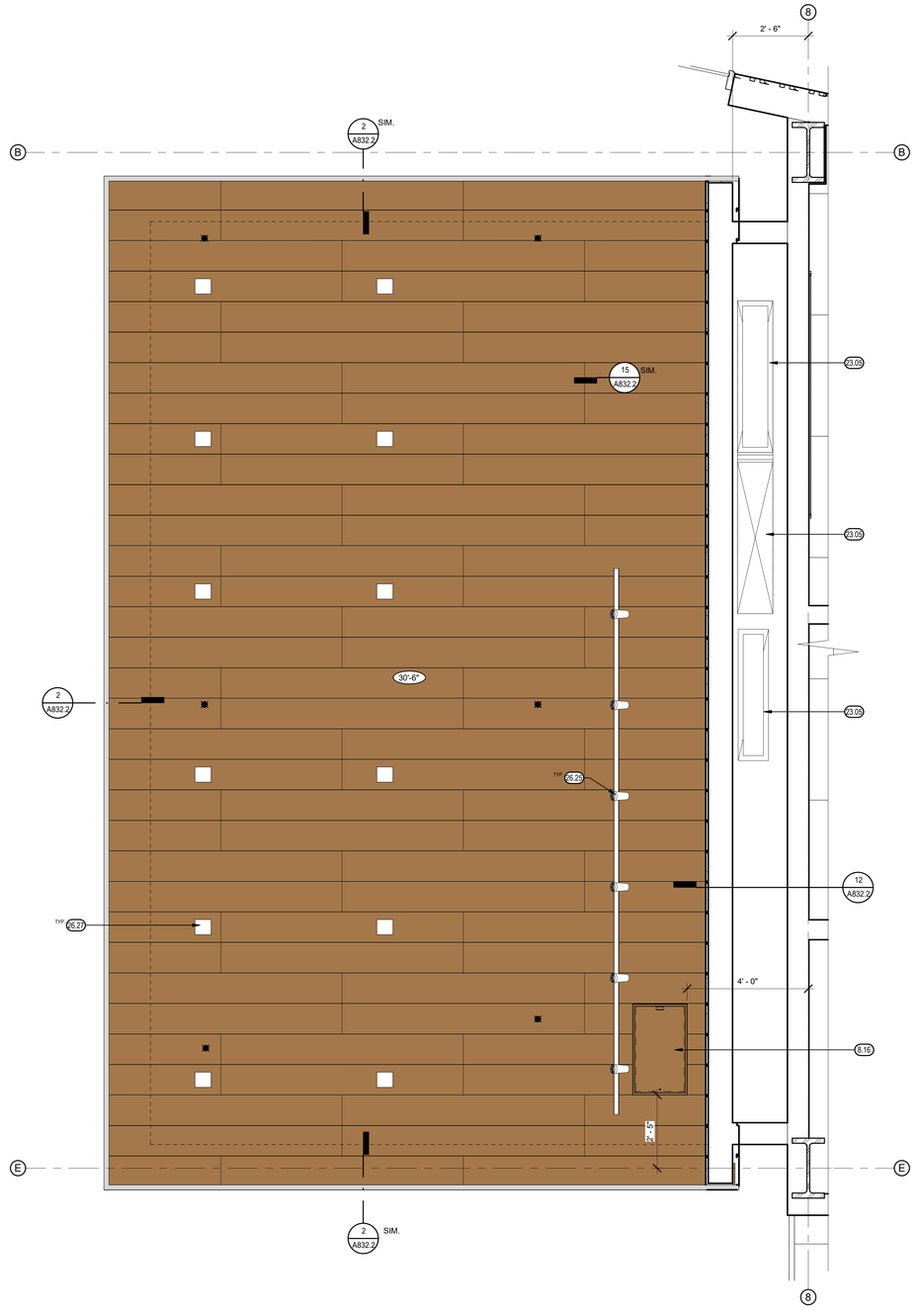

REFLECTED CEILING PLAN - LOBBY FEATURE WALL 1/2" = 1'-0" 9

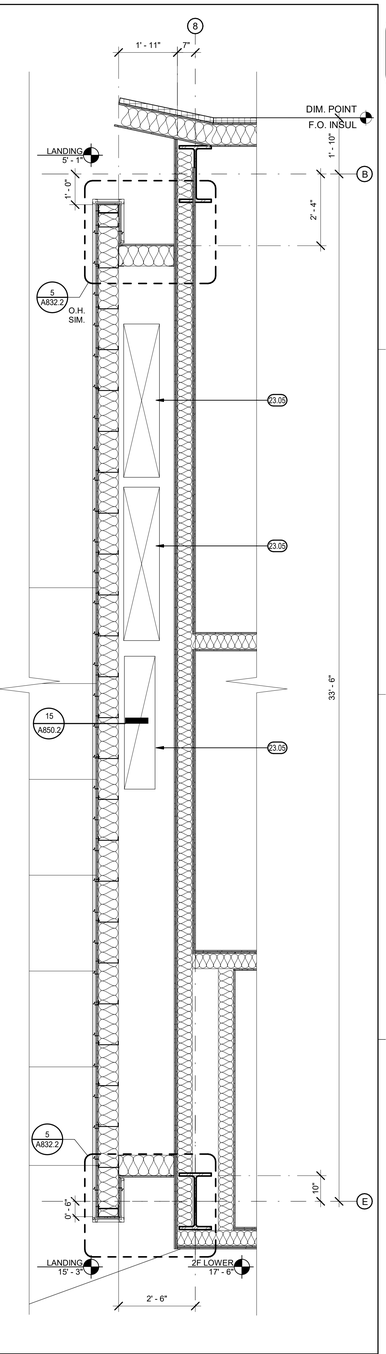

ENG. FLOOR PLAN - LOBBY FEATURE WALL 1/2" = 1'-0" 4

KEYNOTES (X.XX)

8.16	20"W X 36"H CEILING ACCESS DOOR, SEE **14 / A832.2**
23.05	DUCT, SEE MECHANICAL
26.25	TRACK LIGHTING, SEE ELECTRICAL
26.27	RECESSED CEILING LIGHT, SEE ELECTRICAL

LEGEND

FLUSH METAL PANEL, VERTICAL (BROWN)

KYNAR BRAKE METAL, COLOR TO BE SELECTED BY ARCHITECT

IDENTIFICATION STAMP
DIV. OF THE STATE ARCHITECT
APP: 02-122821 INC: 2
REVIEWED FOR
SS ☑ FLS ☑ ACS ☑
DATE: 11/20/2025

Teter, Inc. expressly reserves its common law copyright and other property rights in these plans. This document, the ideas and designs incorporated herein, as an instrument of professional service, is not to be used in whole or in part, for any other project without prior written authorization.

MARK	DATE	DESCRIPTION
A.	11/13/2025	DSA BACKCHECK

LICENSED ARCHITECT ★ STATE OF CALIFORNIA ★ CHRISTOPHER J. CONLEY ★ C-32127 ★ REGISTERED PROFESSIONAL ENGINEER

TETER, INC.
FRESNO HEADQUARTERS
VISALIA | BAKERSFIELD | MODESTO | SAN LUIS OBISPO
ARCHITECTS ENGINEERS CONNECTED

VISALIA CAMPUS UNIVERSITY CENTER
COLLEGE OF THE SEQUOIAS - INCREMENT 2
915 S. MOONEY BLVD
VISALIA, CALIFORNIA

DRAWING TITLE
INTERIOR WALL DETAILS

PROJECT NO.
22-12498

DRAWING
A830.2

PLOT DATE: 11/10/2025 9:04:32 AM

\\tet-file1\Users\tara.chong_TETR\Documents\12498-A-UC_tara.chong.rvt

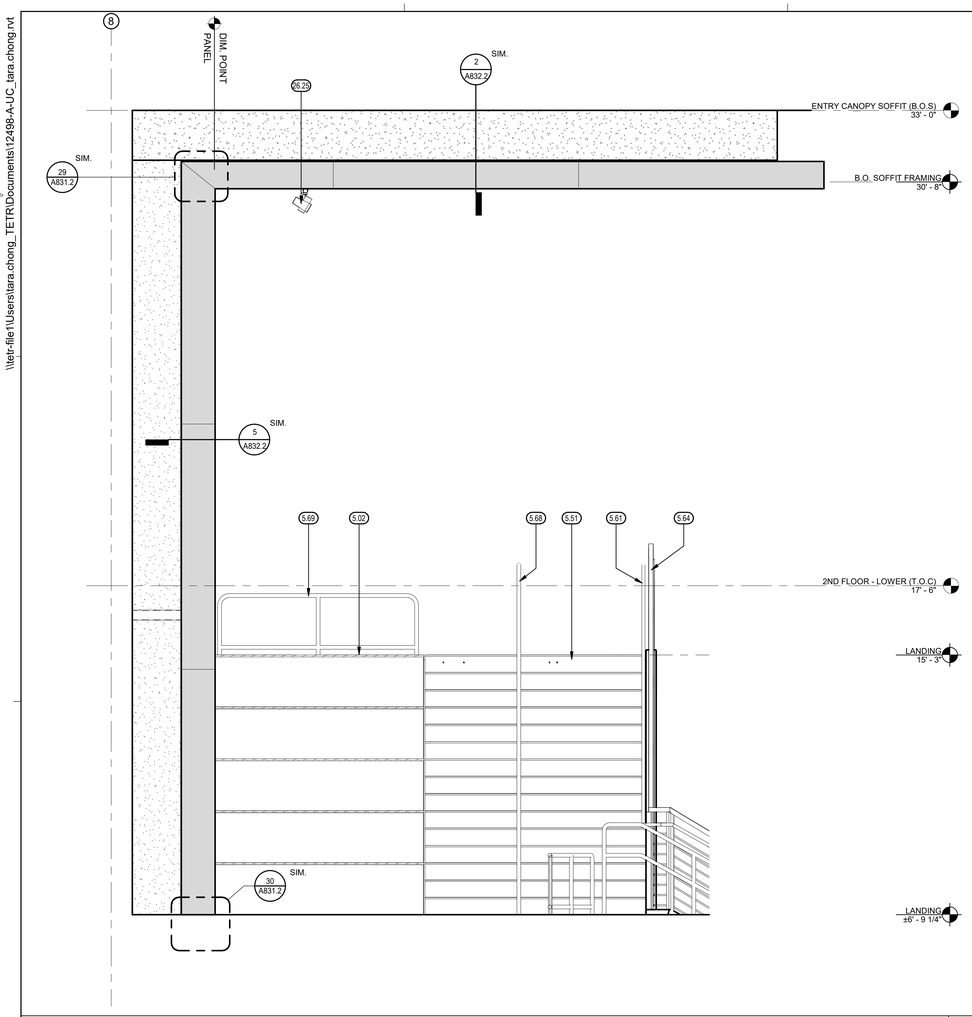

LOBBY FEATURE WALL - NORTH ELEVATION 1/2" = 1'-0" 18

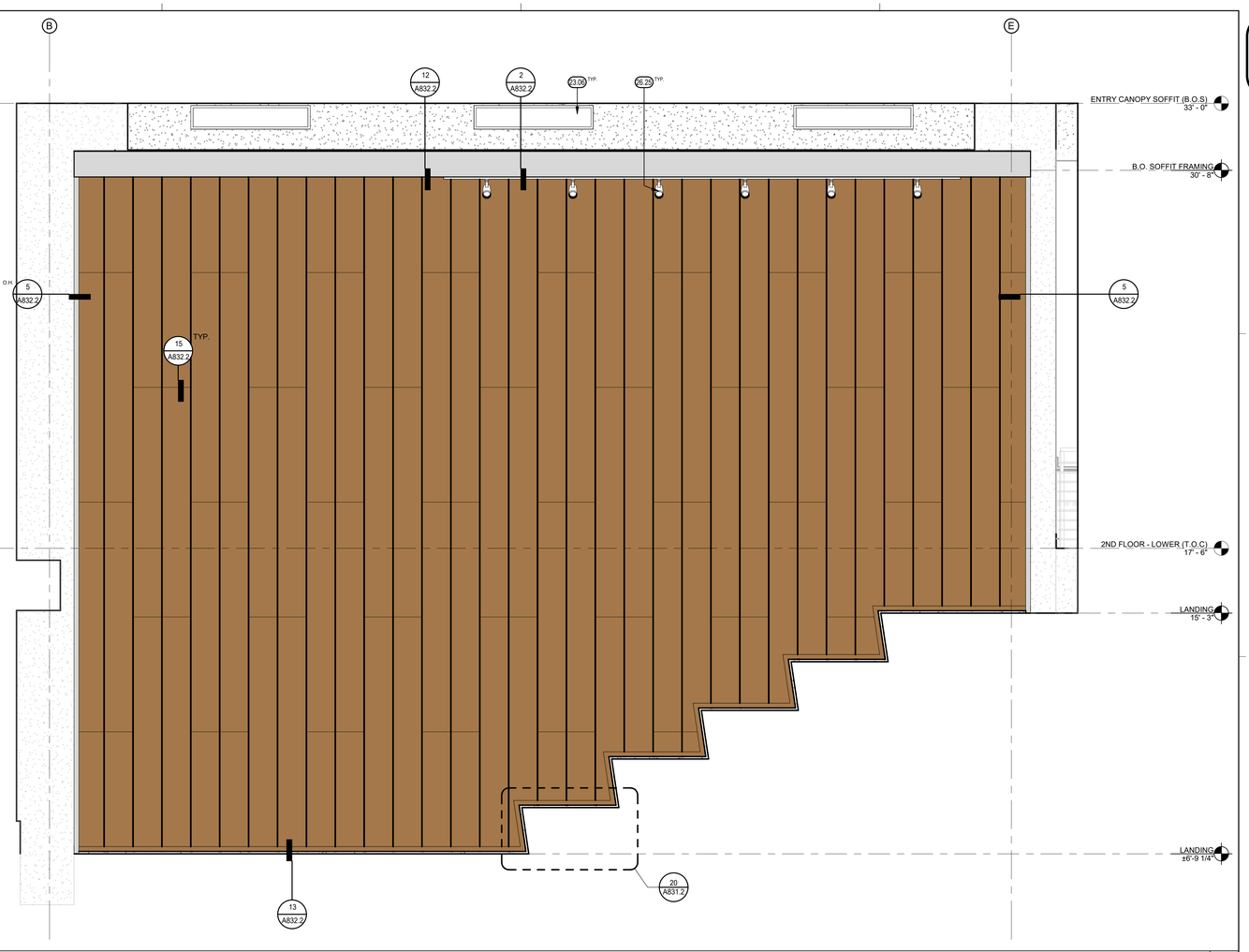

LOBBY FEATURE WALL - WEST ELEVATION 1/2" = 1'-0" 3

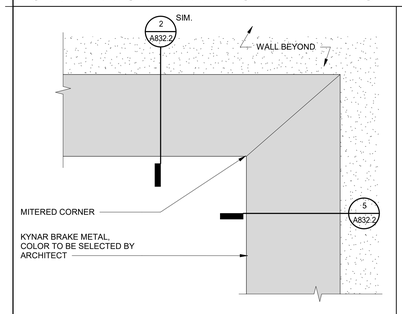

METAL PANEL ELEVATION AT SOFFIT 1 1/2" = 1'-0" 29

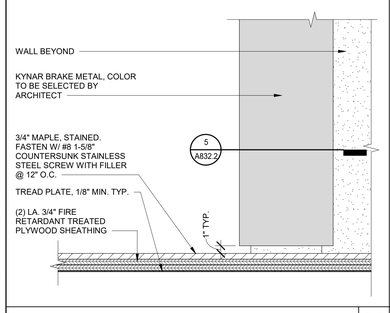

METAL PANEL ELEVATION AT LANDING 1 1/2" = 1'-0" 30

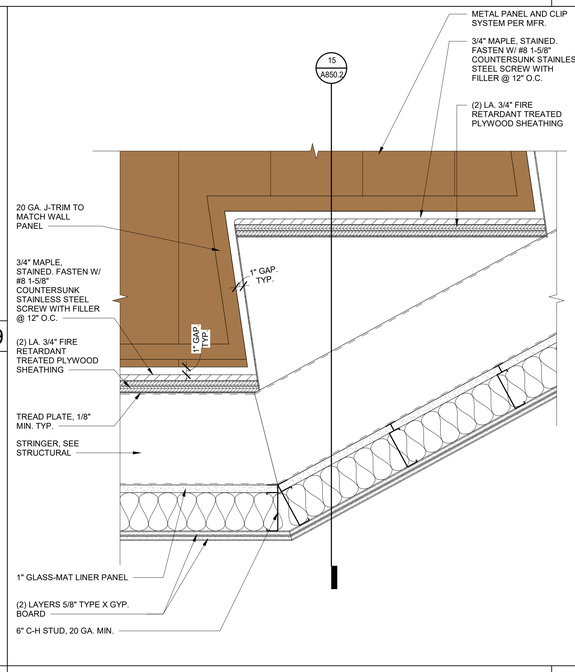

METAL PANEL AT BLEACHER 1 1/2" = 1'-0" 20

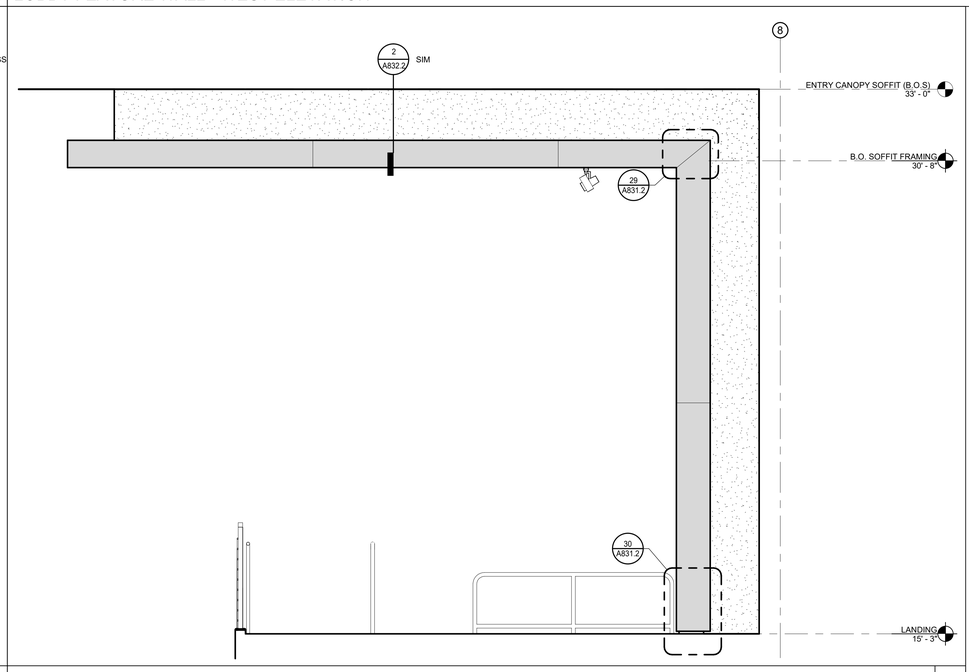

LOBBY FEATURE WALL - SOUTH ELEVATION 1/2" = 1'-0" 5

KEYNOTES

5.02	METAL FRAMED SEATING AND LANDING
5.51	METAL PAN STAIRS WITH CONCRETE FILLED TREADS/LANDING
5.61	HANDRAIL, TYP. SEE **2 / A852.2**
5.64	GUARDRAIL, TYP. SEE **24 / A850.2**
5.68	STAIR HANDRAIL, SEE **20 / A850.2**
5.69	GUARD AT BLEACHER STAIR, SEE **4 / A853.2**
23.06	WALL REGISTER, SEE MECHANICAL
26.25	TRACK LIGHTING, SEE ELECTRICAL

LEGEND

FLUSH METAL PANEL, VERTICAL (BROWN)

KYNAR BRAKE METAL, COLOR TO BE SELECTED BY ARCHITECT

PLOT DATE: 11/10/2025 9:04:56 AM

IDENTIFICATION STAMP
DIV. OF THE STATE ARCHITECT
APP: 02-122821 INC: 2
REVIEWED FOR
SS ☑ FLS ☑ ACS ☑
DATE: 11/20/2025

Teter, Inc. expressly reserves its common law copyright and other property rights in these plans. This document, the ideas and designs incorporated herein, as an instrument of professional service, is not to be used in whole or in part, for any other project without prior written authorization.

MARK	DATE	DESCRIPTION
A	11/13/2025	DSA BACKCHECK

LICENSED ARCHITECT ★ CHRISTOPHER J. CONNELLY ★ No. C-32127 ★ STATE OF CALIFORNIA

TETER, INC.
FRESNO HEADQUARTERS
VISALIA | BAKERSFIELD | MODESTO | SAN LUIS OBISPO
ARCHITECTS ENGINEERS CONNECTED

VISALIA CAMPUS UNIVERSITY CENTER
COLLEGE OF THE SEQUOIAS - INCREMENT 2
915 S. MOONEY BLVD
VISALIA, CALIFORNIA

DRAWING TITLE
INTERIOR WALL DETAILS

PROJECT NO.
22-12498

DRAWING
A831.2

\\tet-file1\Users\tara.chong_TETR\Documents\12498-A-UC_tara.chong.rvt

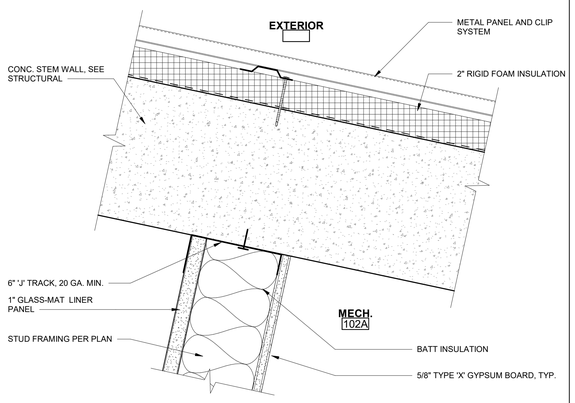

SHAFT WALL AT CONC. STEM WALL

3" = 1'-0" | 17

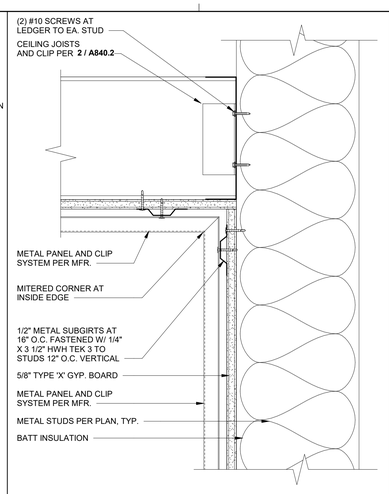

SOFFIT AT LOBBY FEATURE WALL

3" = 1'-0" | 12

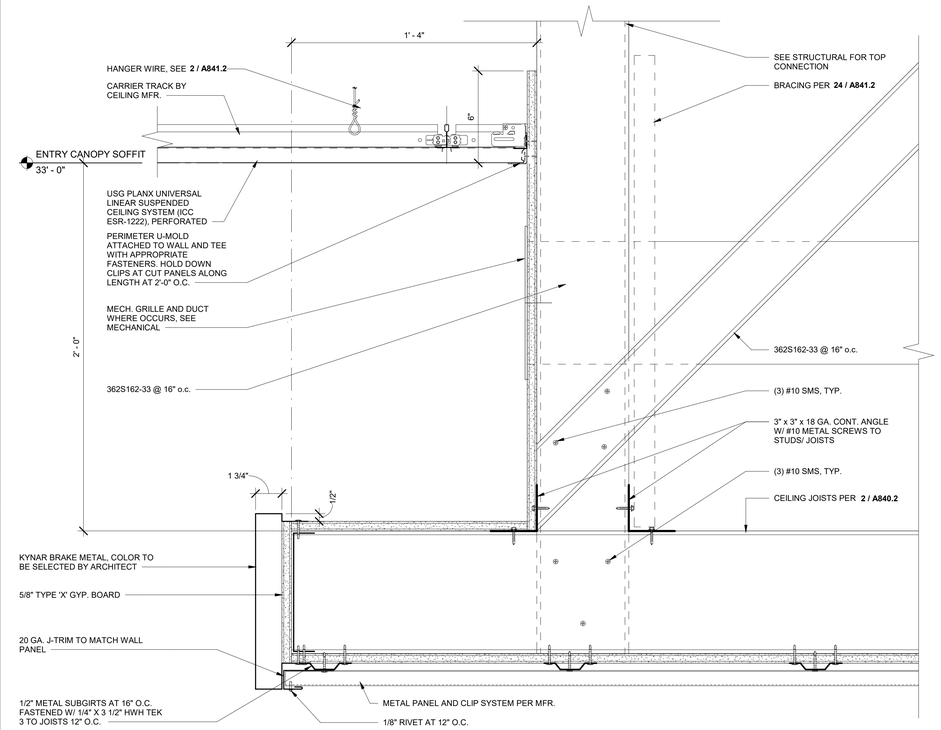

LOBBY FEATURE WALL - SOFFIT

3" = 1'-0" | 2

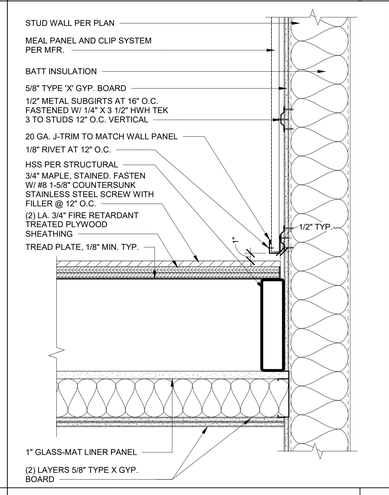

METAL PANEL AT LANDING

1 1/2" = 1'-0" | 13

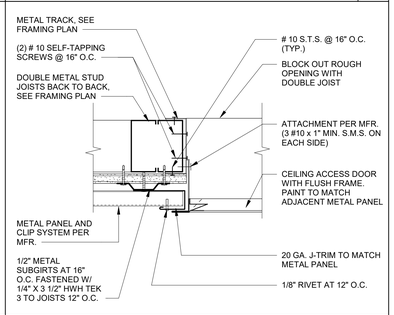

CLG. ACCESS DOOR EDGE AT METAL PANEL

3" = 1'-0" | 14

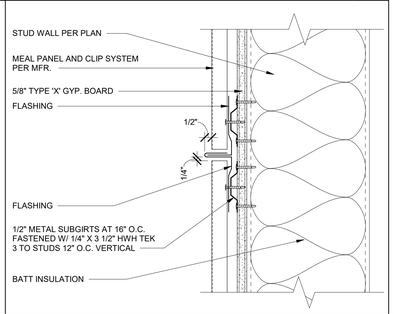

METAL PANEL JOINT

3" = 1'-0" | 15

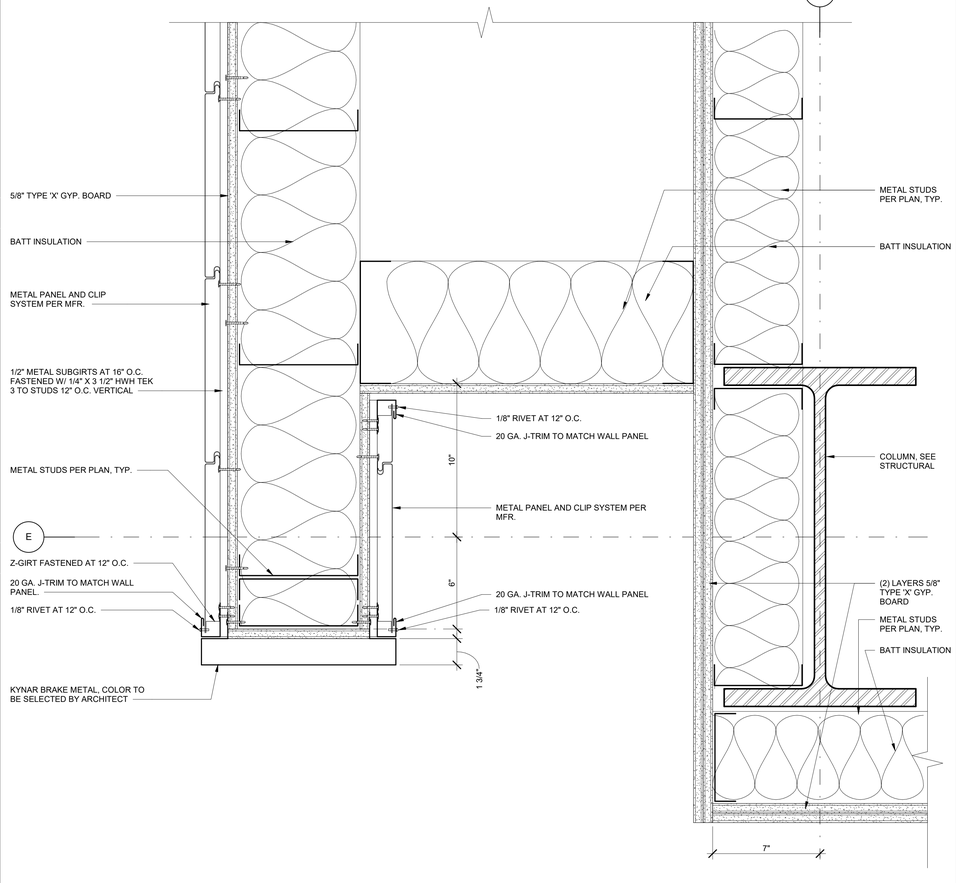

LOBBY FEATURE WALL - REGISTER

3" = 1'-0" | 5

IDENTIFICATION STAMP
DIV. OF THE STATE ARCHITECT
APP: 02-122821 INC: 2
REVIEWED FOR
SS ☑ FLS ☑ ACS ☑
DATE: 11/20/2025

Teter, Inc. expressly reserves its common law copyright and other property rights in these plans. This document, the ideas and designs incorporated herein, as an instrument of professional service, is not to be used in whole or in part, for any other project without prior written authorization.

MARK	DATE	DESCRIPTION
A	11/13/2025	DSA BACKCHECK

LICENSED ARCHITECT ★ TIMOTHY J. TETER ★ No. C-22021 ★ STATE OF CALIFORNIA

TETER, INC.
ARCHITECTS ENGINEERS CONNECTED
FRESNO HEADQUARTERS
VISALIA | BAKERSFIELD | MODESTO | SAN LUIS OBISPO

TETER

VISALIA CAMPUS UNIVERSITY CENTER
COLLEGE OF THE SEQUOIAS - INCREMENT 2
915 S. MOONEY BLVD
VISALIA, CALIFORNIA

DRAWING TITLE
INTERIOR WALL DETAILS

PROJECT NO.
22-12498

DRAWING
A832.2

PLOT DATE: 11/10/2025 9:05:02 AM

\\tet-file1\Users\tara.chong_TETR\Documents\12498-A-UC_tara.chong.rvt

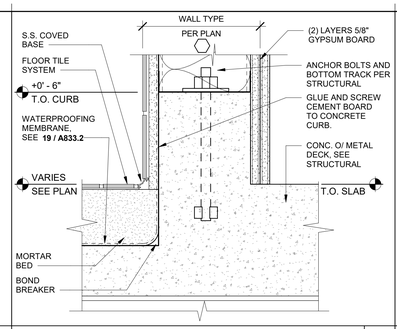

CONC. CURB AT TILE WALL 2F — 3" = 1'-0" — 16

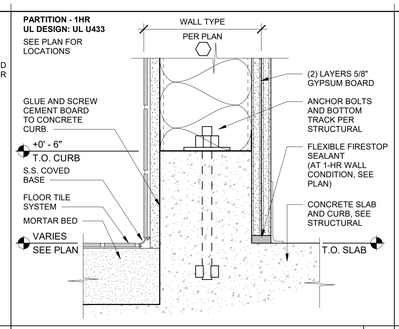

CONC. CURB AT TILE WALL — 3" = 1'-0" — 11

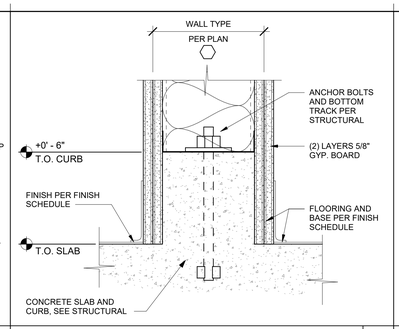

TYP. INT. CONC. CURB — 3" = 1'-0" — 6

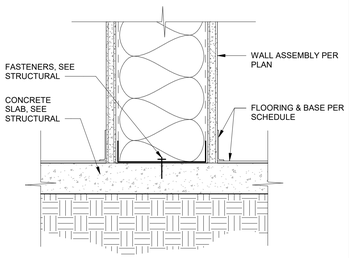

INT. WALL @ CONC. SLAB — 3" = 1'-0" — 1

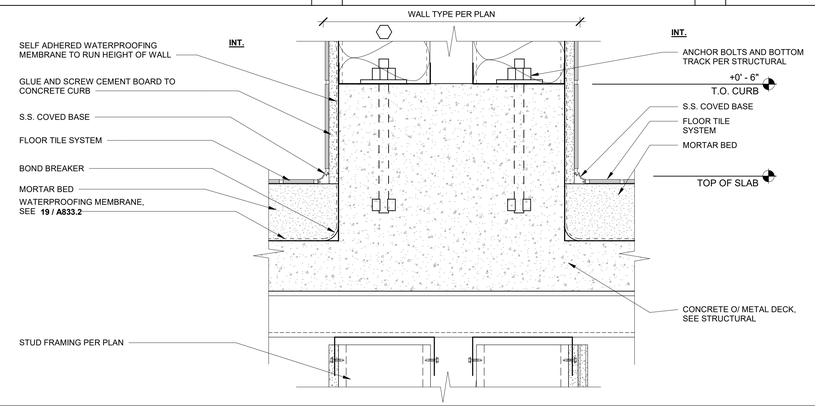

CONC. CURB AT 2F PLUMBING CHASE — 3" = 1'-0" — 18

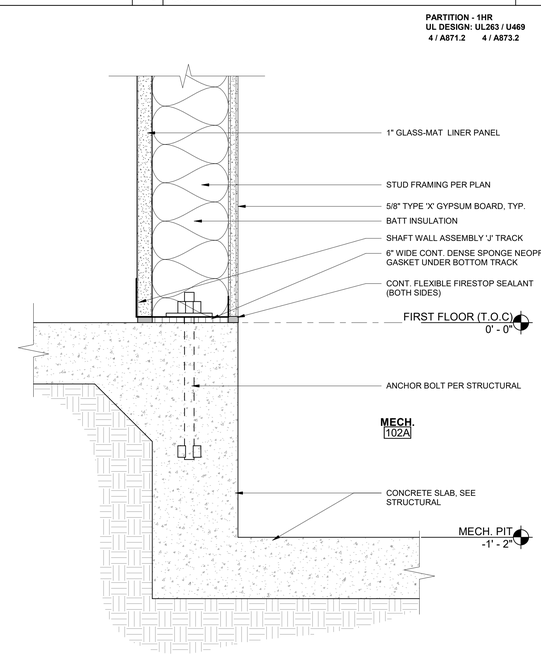

SHAFT WALL AT MECH. PIT — 3" = 1'-0" — 13

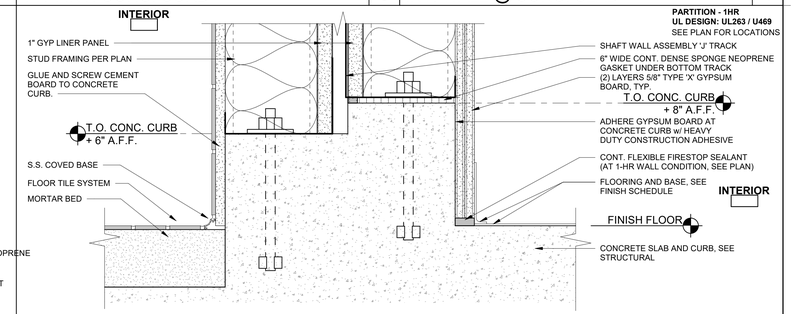

CURB AT RESTROOM — 3" = 1'-0" — 2

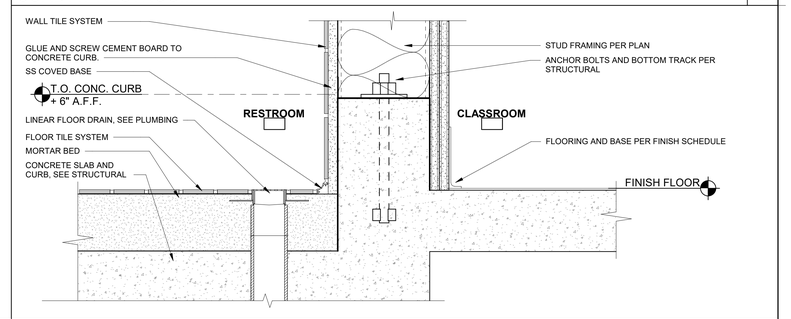

LINEAR DRAIN AT RESTROOM — 3" = 1'-0" — 3

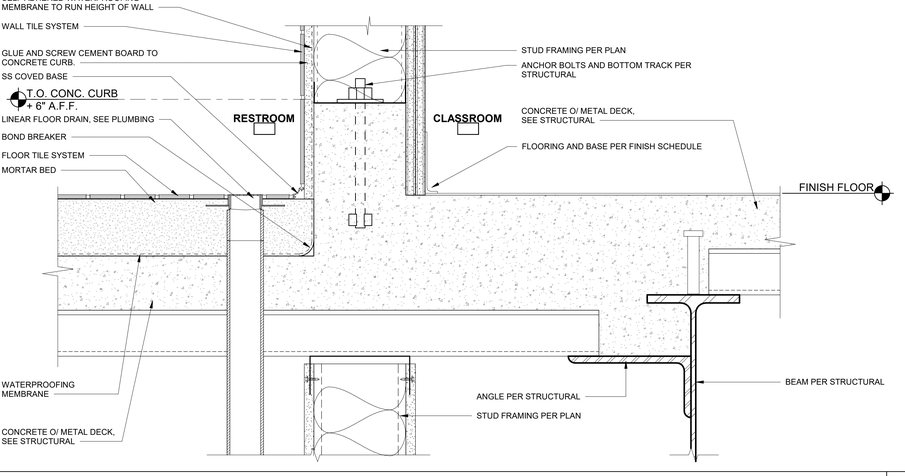

LINEAR DRAIN AT 2F RESTROOM — 3" = 1'-0" — 19

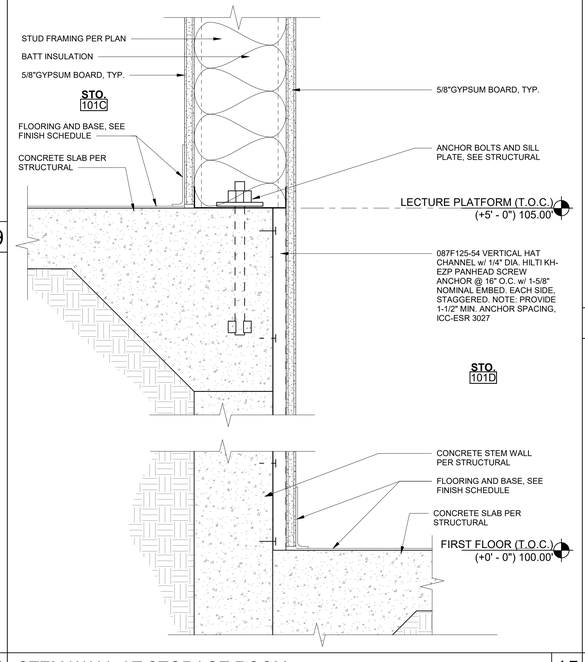

STEM WALL AT STORAGE ROOM — 3" = 1'-0" — 15

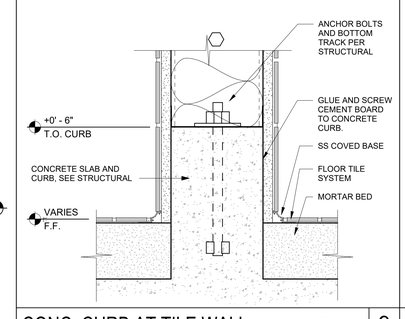

CONC. CURB AT TILE WALL — 3" = 1'-0" — 9

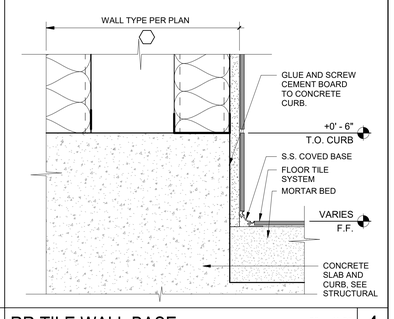

RR TILE WALL BASE — 3" = 1'-0" — 4

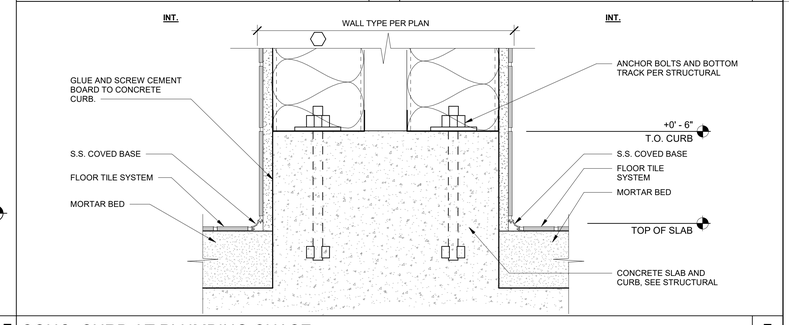

CONC. CURB AT PLUMBING CHASE — 3" = 1'-0" — 5

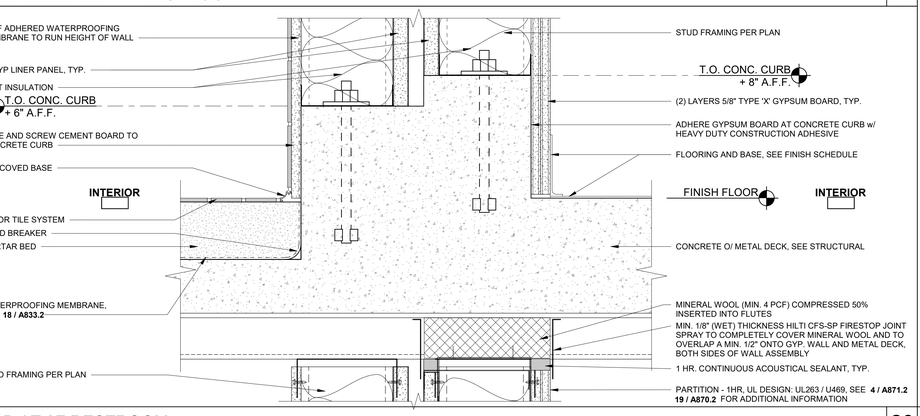

CURB AT 2F RESTROOM — 3" = 1'-0" — 20

IDENTIFICATION STAMP
DIV. OF THE STATE ARCHITECT
APP: 02-122821 INC: 2
REVIEWED FOR
SS ☑ FLS ☑ ACS ☑
DATE: 11/20/2025

Teter, Inc. expressly reserves its common law copyright and other property rights in these plans. This document, the ideas and designs incorporated herein, as an instrument of professional service, is not to be used in whole or part, for any other project without prior written authorization.

MARK	DATE	DESCRIPTION
A	11/13/2025	DSA BACKCHECK

LICENSED ARCHITECT
CONSTRUCTION CONFORMANCE
STATE OF CALIFORNIA

TETER, INC.
ARCHITECTS ENGINEERS CONSULTANTS
FRESNO HEADQUARTERS
VISALIA | BAKERSFIELD | MODESTO | SAN LUIS OBISPO

VISALIA CAMPUS UNIVERSITY CENTER
COLLEGE OF THE SEQUOIAS - INCREMENT 2
915 S. MOONEY BLVD
VISALIA, CALIFORNIA

DRAWING TITLE
INTERIOR WALL DETAILS

PROJECT NO.
22-12498

DRAWING
A833.2

PLOT DATE: 11/10/2025 9:05:12 AM

\\tet-file1\Users\tara.chong_TETR\Documents\12498-A-UC_tara.chong.rvt

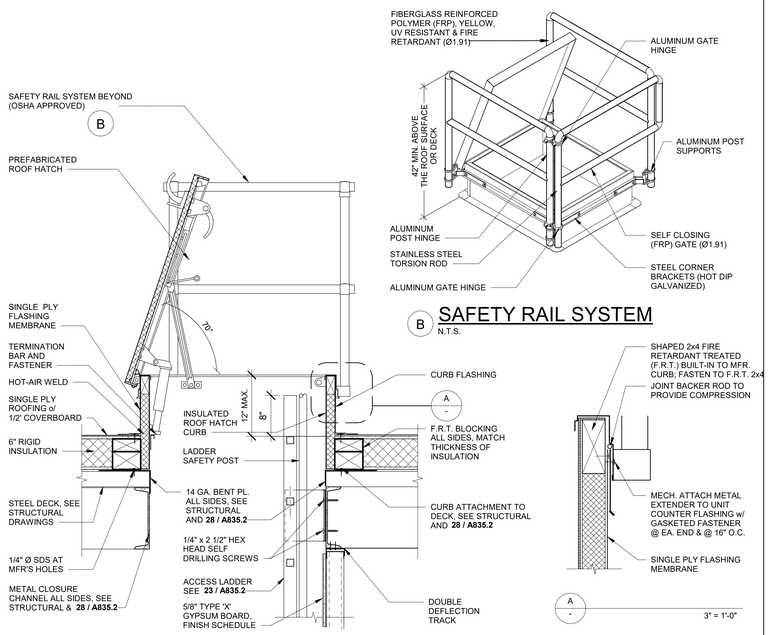

B SAFETY RAIL SYSTEM
N.T.S.

ROOF ACCESS HATCH WITH GUARDRAIL
1" = 1'-0" | 22

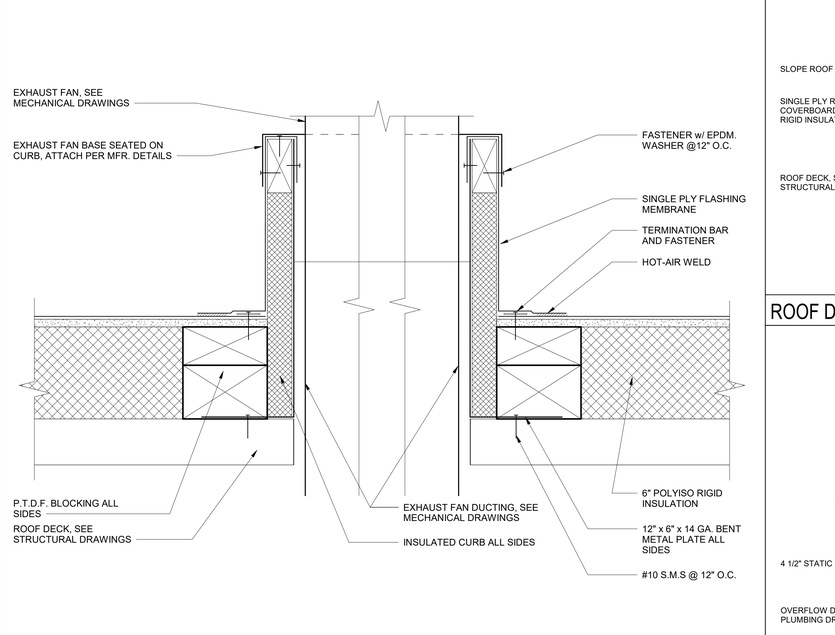

EXHAUST FAN OPENING
3" = 1'-0" | 12

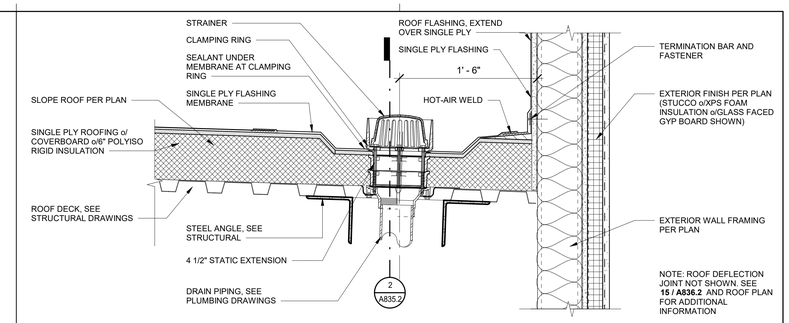

ROOF DRAIN SECTION WITH WALL
1 1/2" = 1'-0" | 1

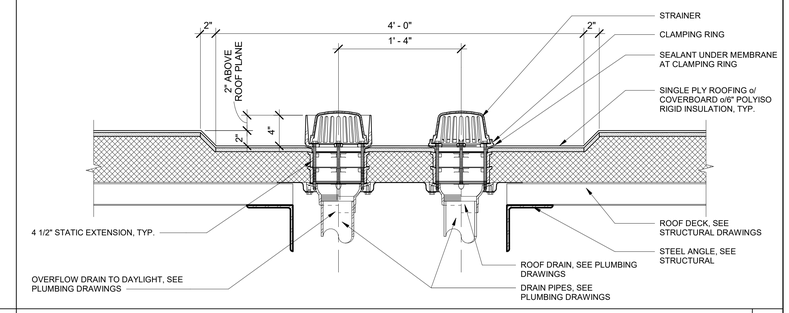

ROOF DRAIN SECTION
1 1/2" = 1'-0" | 2

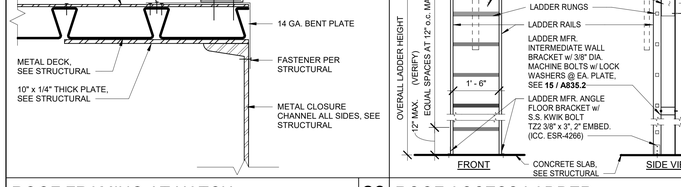

ROOF FRAMING AT HATCH
3" = 1'-0" | 28

ROOF ACCESS LADDER
1/2" = 1'-0" | 23

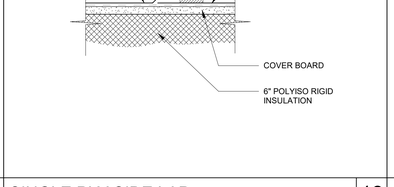

SINGLE PLY SIDE LAP
3" = 1'-0" | 18

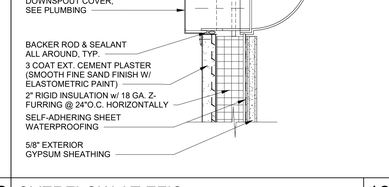

OVERFLOW AT EFIS
3" = 1'-0" | 13

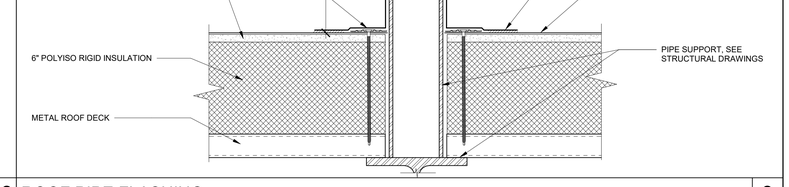

ROOF PIPE FLASHING
3" = 1'-0" | 3

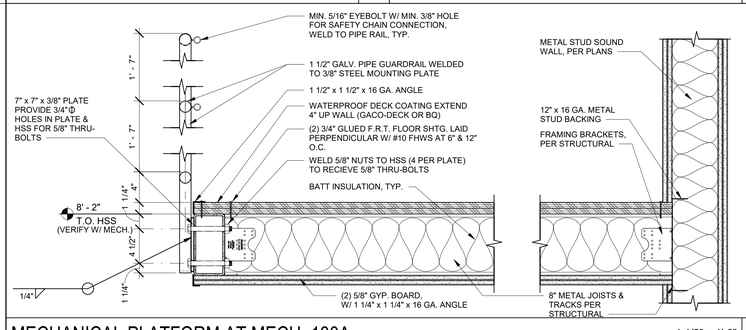

MECHANICAL PLATFORM AT MECH. 130A
1 1/2" = 1'-0" | 24

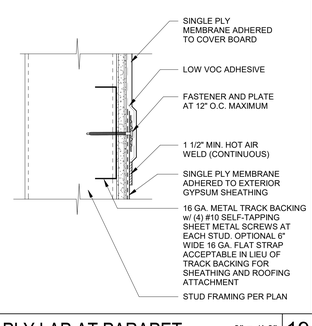

SINGLE PLY LAP AT PARAPET
3" = 1'-0" | 19

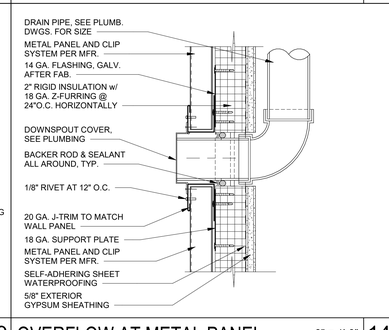

OVERFLOW AT METAL PANEL
3" = 1'-0" | 14

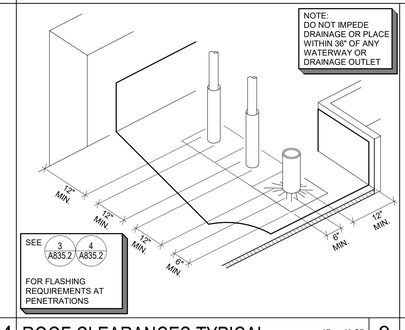

ROOF CLEARANCES TYPICAL
1" = 1'-0" | 9

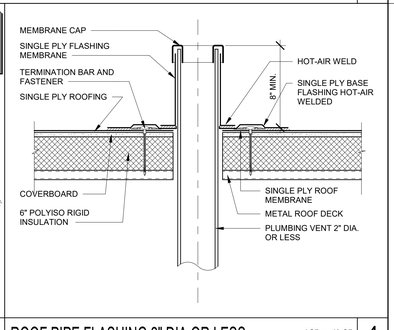

ROOF PIPE FLASHING 2" DIA OR LESS
12" = 1'-0" | 4

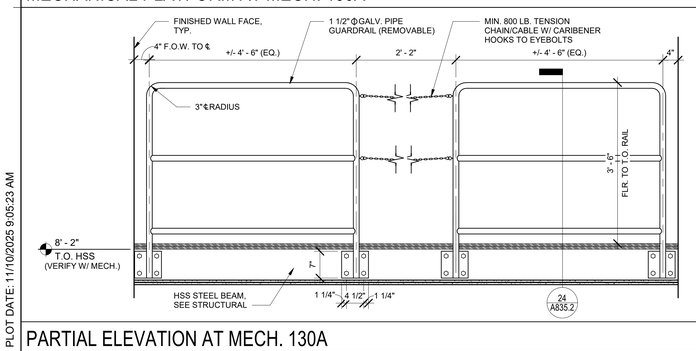

PARTIAL ELEVATION AT MECH. 130A
3/4" = 1'-0" | 25

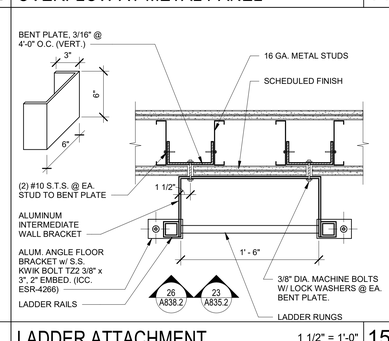

LADDER ATTACHMENT
1 1/2" = 1'-0" | 15

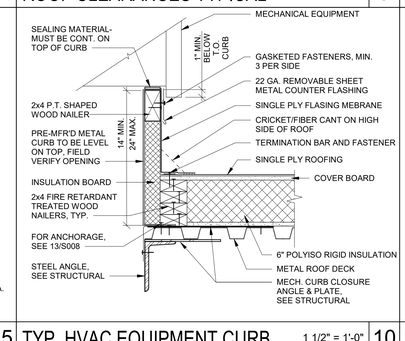

TYP. HVAC EQUIPMENT CURB
1 1/2" = 1'-0" | 10

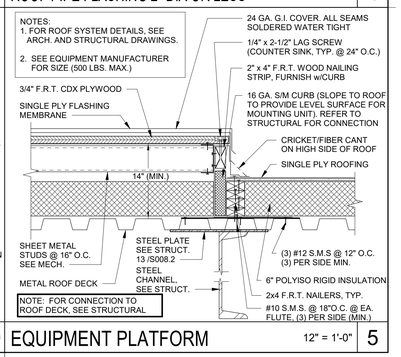

EQUIPMENT PLATFORM
12" = 1'-0" | 5

IDENTIFICATION STAMP
DIV. OF THE STATE ARCHITECT
APP: 02-122821 INC: 2
REVIEWED FOR
SS ☑ FLS ☑ ACS ☑
DATE: 11/20/2025

Teter, Inc. expressly reserves its common law copyright and other property rights in these plans. This document, the ideas and designs incorporated herein, as an instrument of professional service, is not to be used in whole or in part, for any other project without prior written authorization.

MARK	DATE	DESCRIPTION
A	11/13/2025	DSA BACKCHECK

TETER, INC.
ARCHITECTS ENGINEERS CONNECTED
FRESNO HEADQUARTERS
VISALIA | BAKERSFIELD | MODESTO | SAN LUIS OBISPO

VISALIA CAMPUS UNIVERSITY CENTER
COLLEGE OF THE SEQUOIAS - INCREMENT 2
915 S. MOONEY BLVD
VISALIA, CALIFORNIA

DRAWING TITLE
ROOF DETAILS

PROJECT NO.
22-12498

DRAWING
A835.2

PLOT DATE: 11/10/2025 9:05:23 AM

\\tet-file1\Users\tara.chong_TETR\Documents\12498-A-UC_tara.chong.rvt

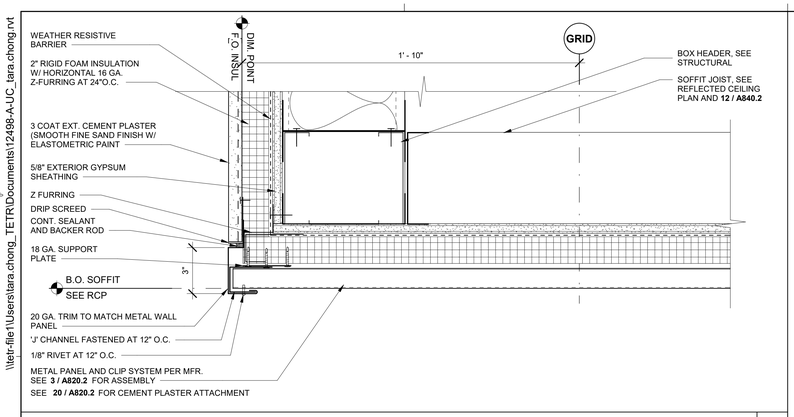

EXTERIOR SOFFIT AT METAL PANEL AND CEMENT PLASTER

3" = 1'-0" | 22

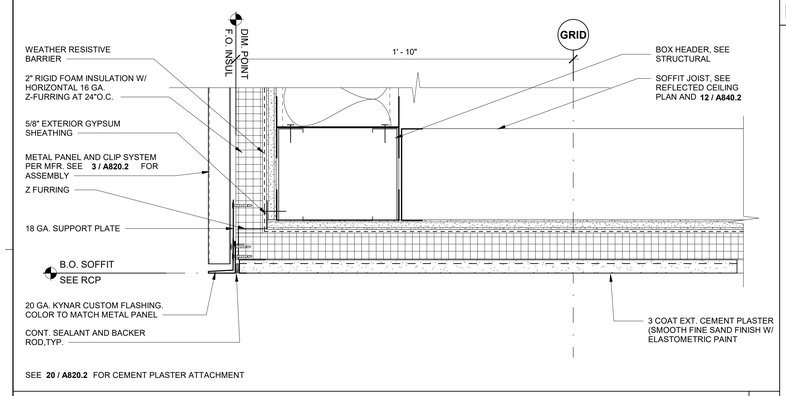

METAL PANEL SOFFIT EDGE

3" = 1'-0" | 23

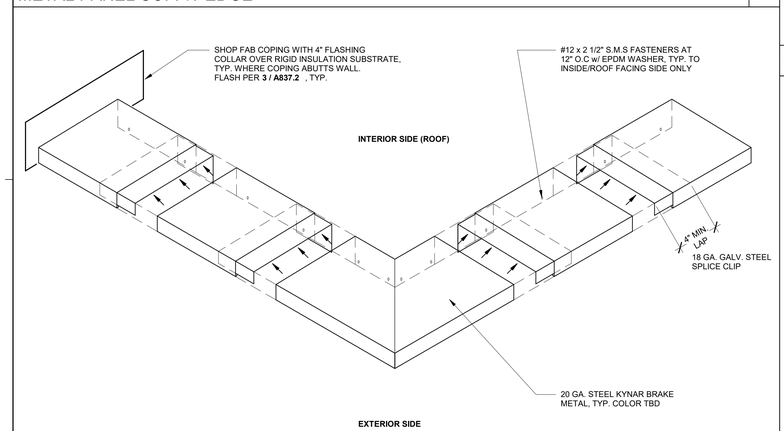

COPING SLIP JOINT

1" = 1'-0" | 25

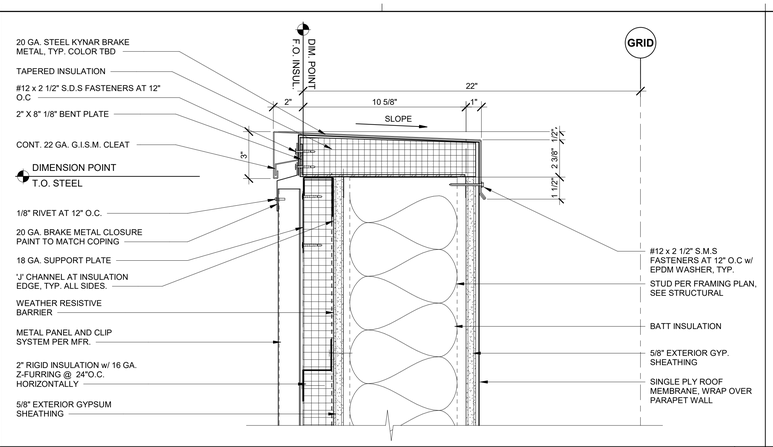

PARAPET CAP AT METAL PANEL

3" = 1'-0" | 12

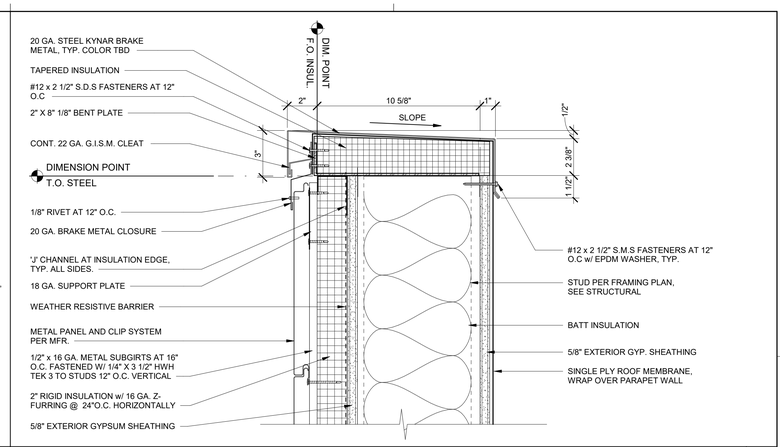

PARAPET CAP AT METAL PANEL

3" = 1'-0" | 2

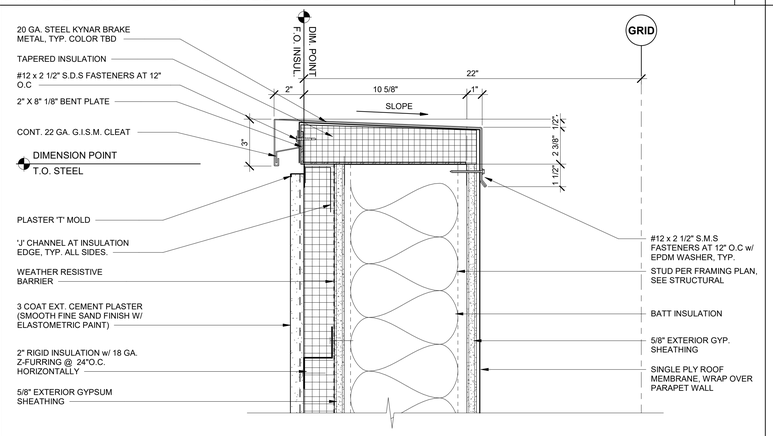

PARAPET CAP AT CEMENT PLASTER

3" = 1'-0" | 13

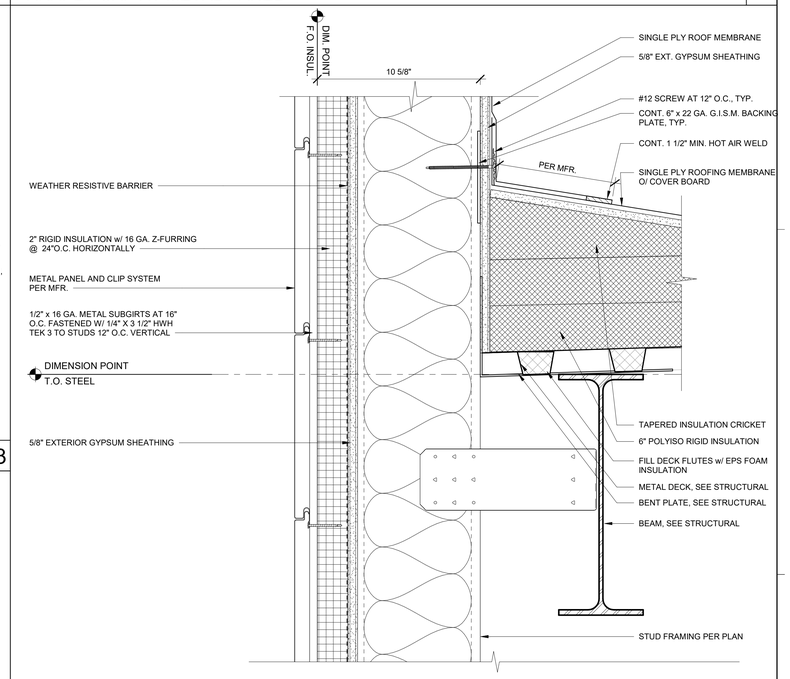

ROOF TO WALL AT OVERHANG

3" = 1'-0" | 4

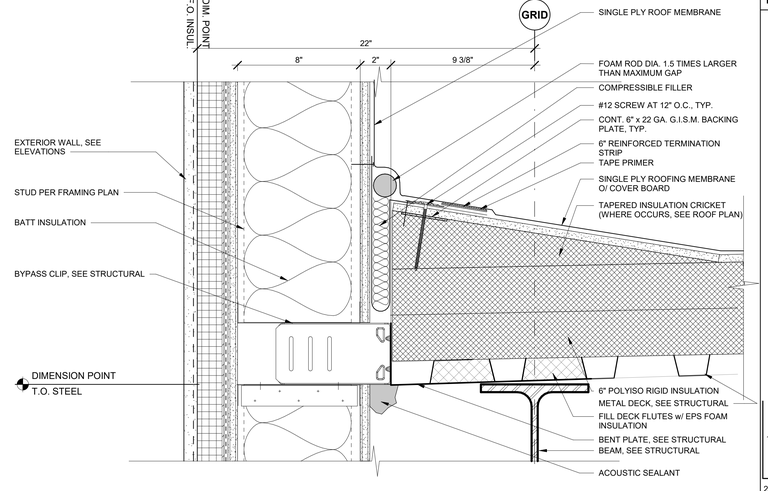

DEFLECTION JOINT FROM ROOF TO WALL, TYP.

3" = 1'-0" | 15

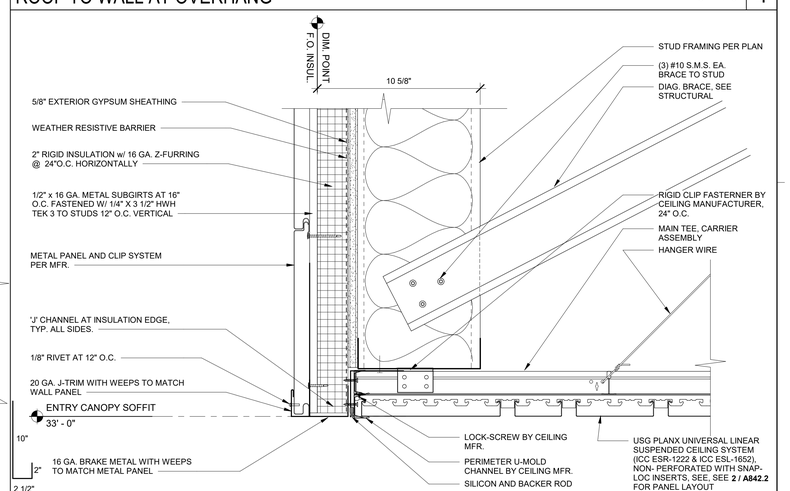

ENTRY CANOPY SOFFIT AT METAL PANEL

3" = 1'-0" | 5

IDENTIFICATION STAMP
DIV. OF THE STATE ARCHITECT
APP: 02-122821 INC: 2
REVIEWED FOR
SS ☑ FLS ☑ ACS ☑
DATE: 11/20/2025

Teter, Inc. expressly reserves its common law copyright and other property rights in these plans. This document, the ideas and designs incorporated herein, as an instrument of professional service, is not to be used in whole or part, for any other project without prior written authorization.

MARK	DATE	DESCRIPTION
A	11/13/2025	DSA BACKCHECK

LICENSED ARCHITECT STATE OF CALIFORNIA CHRISTOPHER J. COLLINS C-30 Exp. 08-31-2027

TETER, INC.
FRESNO HEADQUARTERS
VISALIA | BAKERSFIELD | MODESTO | SAN LUIS OBISPO
ARCHITECTS ENGINEERS CONNECTED

VISALIA CAMPUS UNIVERSITY CENTER
COLLEGE OF THE SEQUOIAS - INCREMENT 2
915 S. MOONEY BLVD
VISALIA, CALIFORNIA

DRAWING TITLE
ROOF DETAILS

PROJECT NO.
22-12498

DRAWING
A836.2

PLOT DATE: 11/10/2025 9:05:30 AM

\\tet-file1\Users\tara.chong_TETR\Documents\12498-A-UC_tara.chong.rvt

ROOFING ZONE PATTERN	SUBSTRATE	TOP OF ROOF DECK INSULATION		COVER BOARD		ROOFING MEMBRANE			ALLOWABLE WIND UPLIFT CAPACITY
		TYPE	ATTACHMENT (2), (3)	TYPE	ATTACHMENT (2), (3)	SARNAFIL PVC MEMBRANE	LAP WIDTH	WELD WIDTH	
TYPICAL ROOF	STEEL DECK, SEE STRUCTURAL	6" MIN. POLYISOCYANURATE RIGID INSULATION, MIN.	6 (5.33 S.F.)	5/8" DENS-DECK PRIME	SARNAFASTENERS AND SARNAPLATES AT 1 FASTENER PER 2 SQ. FT.	G410-80 FELTBACK MEMBRANE ADHERED TO THE COVER BOARD WITH SARNACOL 2121 ADHESIVE APPLIED TO COVER BOARD AT 0.75 GAL/100 SQ. FT	3"	1.5"	53 PSF

ROOFING FASTENER SCHEDULE REFERENCED NOTES:

(1) BASIS OF DESIGN IS SIKA G410-80 FELTBACK (ICC-ESR 1157) SARNAFIL PVC COATED METAL FLASHING SHEET. ALL FASTENERS AND PLATES SHALL BE APPROVED FOR USE WITH ROOF ASSEMBLY AND SHALL NOT VOID ANY WARRANTY AND SHALL BE APPROVED BY FACTORY MUTUAL AND MEET FM STANDARD 4470 FOR CORROSION RESISTANCE.

(2) ALL FASTENERS AND PLATES AND THEIR LAYOUT ARE TO BE ACCEPTED BY THE ROOFING MANUFACTURER.

(3) FASTENERS PER 4X8 BOARD.

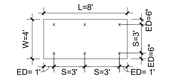

6 FASTENERS PER 4' x 8' INSULATION BOARD PLAN (5.33 S.F.)
W=WIDTH, L=LENGTH, ED=EDGE DISTANCE, S=SPACING

ROOFING FASTENER SCHEDULE

3" = 1'-0" | 1

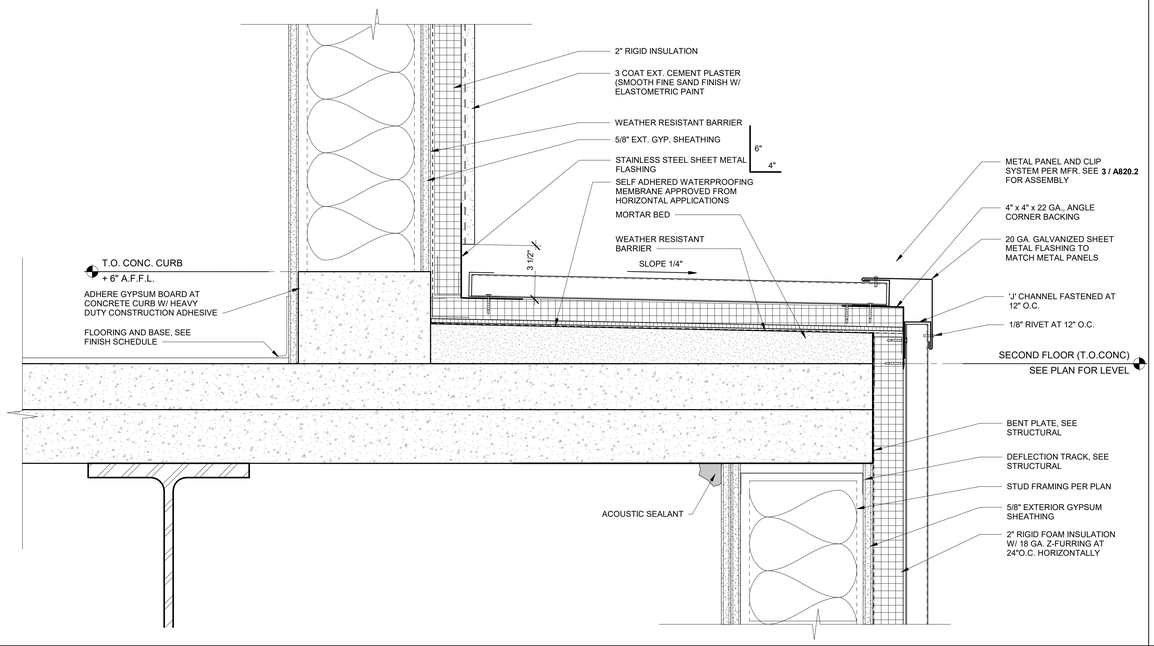

OVERHANG AT 2F

3" = 1'-0" | 8

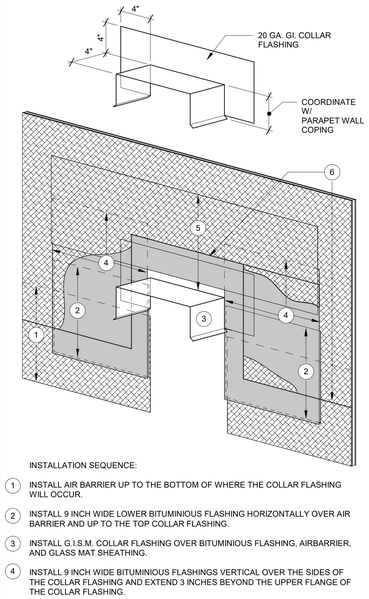

INSTALLATION SEQUENCE:

1. INSTALL AIR BARRIER UP TO THE BOTTOM OF WHERE THE COLLAR FLASHING WILL OCCUR.
2. INSTALL 9 INCH WIDE LOWER BITUMINIOUS FLASHING HORIZONTALLY OVER AIR BARRIER AND UP TO THE TOP COLLAR FLASHING.
3. INSTALL G.I.S.M. COLLAR FLASHING OVER BITUMINIOUS FLASHING, AIRBARRIER, AND GLASS MAT SHEATHING.
4. INSTALL 9 INCH WIDE BITUMINIOUS FLASHINGS VERTICAL OVER THE SIDES OF THE COLLAR FLASHING AND EXTEND 3 INCHES BEYOND THE UPPER FLANGE OF THE COLLAR FLASHING.
5. INSTALL TOP 9 INCH WIDE BITUMINIOUS FLASHING HORIZONTAL OVER THE UPPER FLANGE OF THE COLLAR FLASHING.
6. INSTALL UPPER AIR BARRIER OVER THE TOP BITUMINIOUS FLASHING.

PARAPET TO WALL FLASHING

1 1/2" = 1'-0" | 3

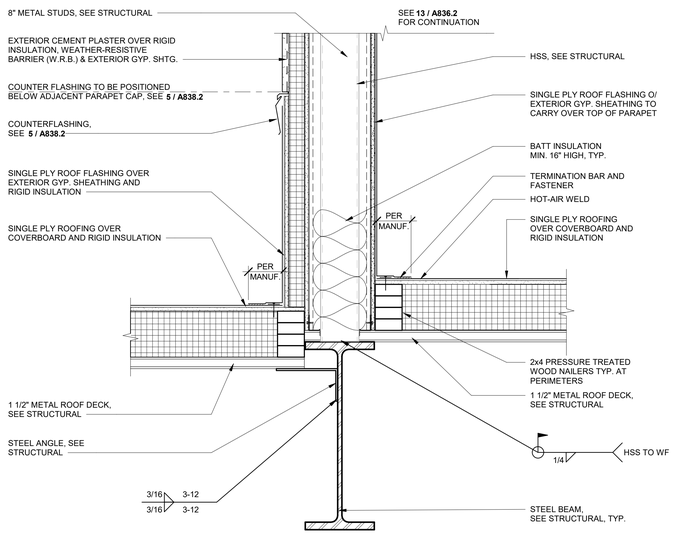

BASE OF PARAPET AT OFFSET ROOF DECKS

1 1/2" = 1'-0" | 25

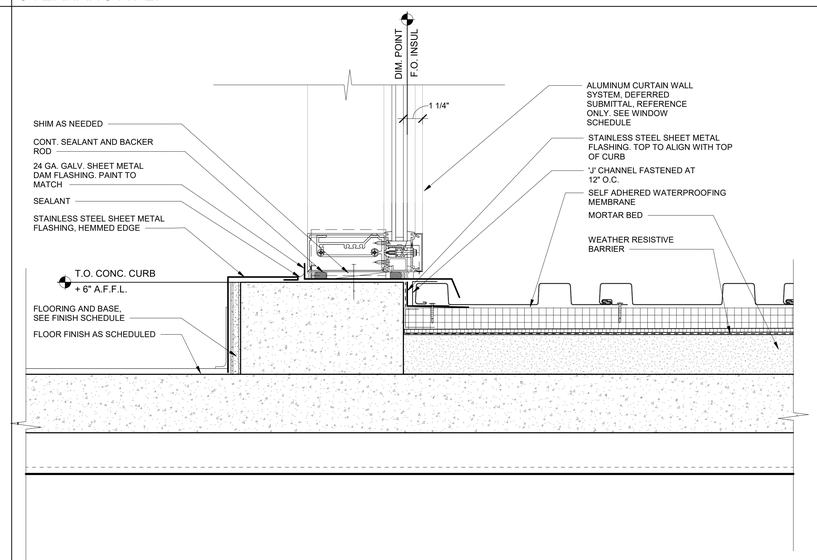

GLAZING AT FLOOR OVERHANG

3" = 1'-0" | 5

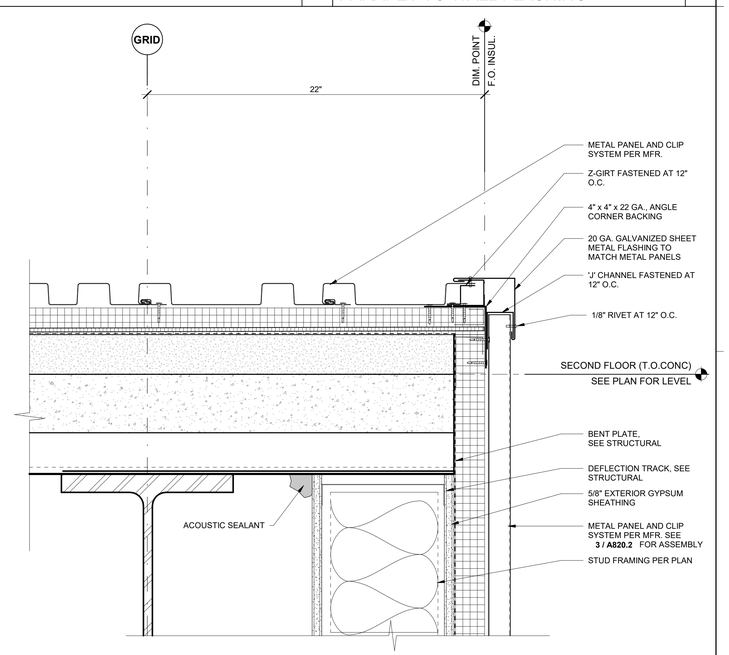

IDENTIFICATION STAMP
DIV. OF THE STATE ARCHITECT
APP: 02-122821 INC: 2
REVIEWED FOR
SS ☑ FLS ☑ ACS ☑
DATE: 11/20/2025

Teter, Inc. expressly reserves its common law copyright and other property rights in these plans. This document, the ideas and designs incorporated herein, as an instrument of professional service, is not to be used in whole or part, for any other project without prior written authorization.

MARK	DATE	DESCRIPTION
A	11/13/2025	DSA BACKCHECK

LICENSED ARCHITECT ★ STANDARD OF CONFORMANCE ★ STATE OF CALIFORNIA

TETER, INC.
FRESNO HEADQUARTERS
VISALIA | BAKERSFIELD | MODESTO | SAN LUIS OBISPO
ARCHITECTS ENGINEERS CONNECTED

VISALIA CAMPUS UNIVERSITY CENTER
COLLEGE OF THE SEQUOIAS - INCREMENT 2
915 S. MOONEY BLVD
VISALIA, CALIFORNIA

DRAWING TITLE
ROOF DETAILS

PROJECT NO.
22-12498

DRAWING
A837.2

PLOT DATE: 11/10/2025 9:05:37 AM

\\tet-file1\Users\tara.chong_TETR\Documents\12498-A-UC_tara.chong.rvt

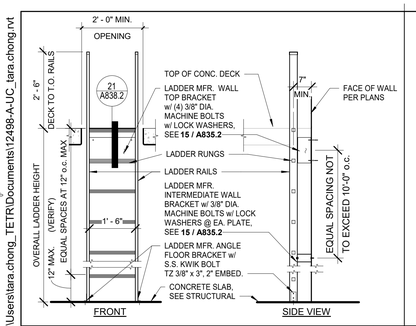

ATTIC ACCESS LADDER 1/2" = 1'-0" | 26

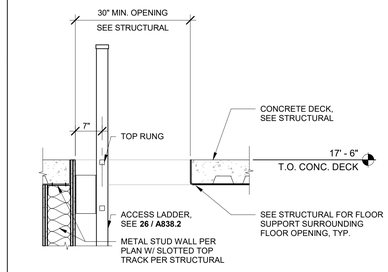

LADDER AT DECK OPENING 3/4" = 1'-0" | 21

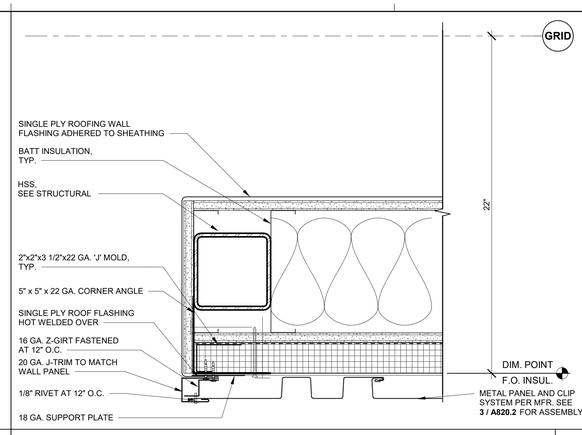

END OF PARAPET AT CLADDING TRANS. TO SINGLE PLY 3" = 1'-0" | 7

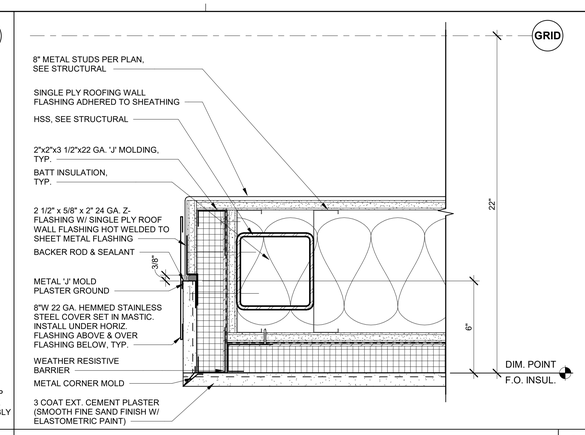

END OF PARAPET AT PLASTER TRANS. TO SINGLE PLY 3" = 1'-0" | 2

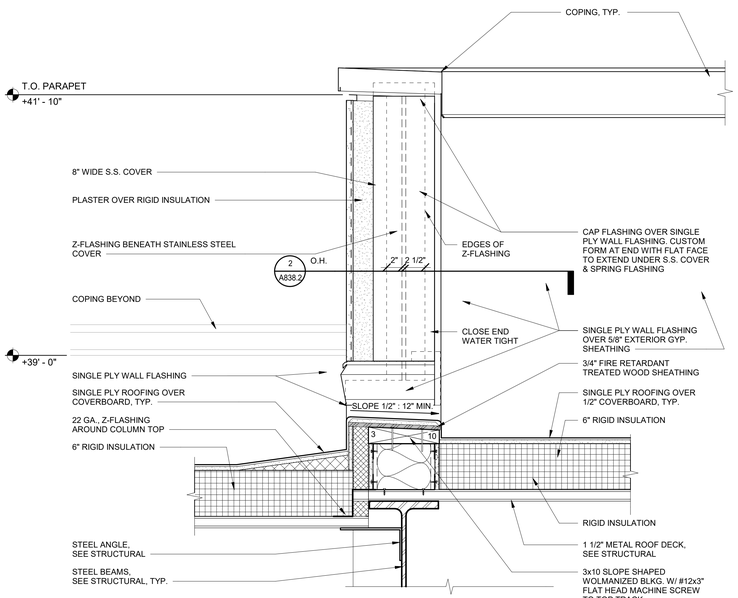

PARAPET OPENING BETWEEN ROOF DECKS 1 1/2" = 1'-0" | 23

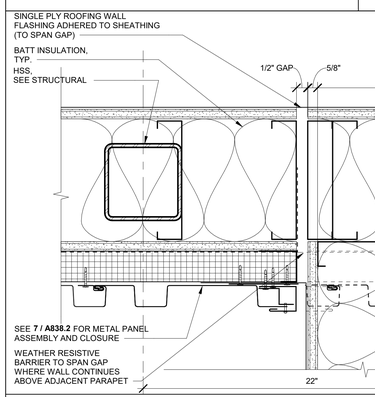

PLAN - VERTICAL EXPANSION JOINT 3" = 1'-0" | 8

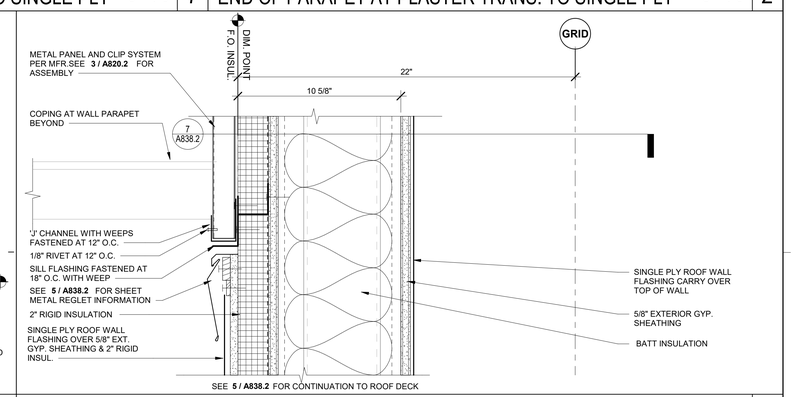

METAL PANEL AT INNER ROOF PARAPET 3" = 1'-0" | 3

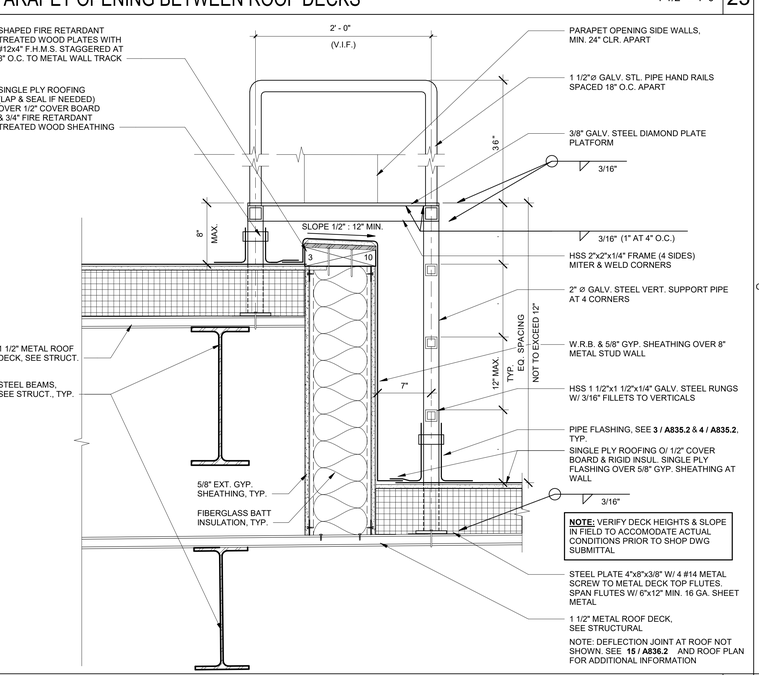

ROOF LADDER & RAILS AT PARAPET BETWEEN HIGH & LOW ROOFS 1 1/2" = 1'-0" | 25

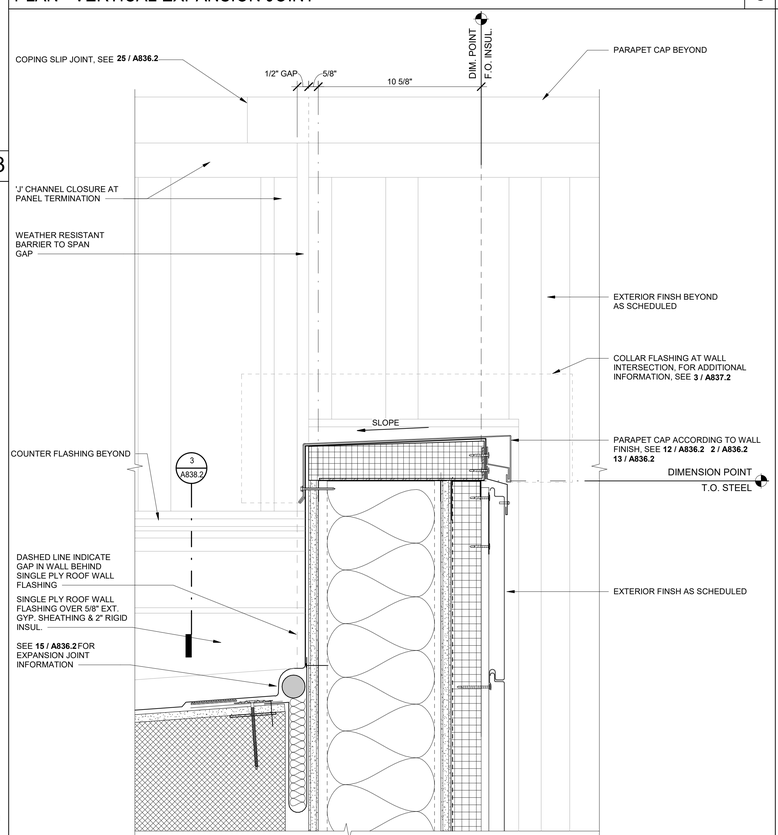

ELEVATION - EXT. VERTICAL EXPANSION JOINT 3" = 1'-0" | 10

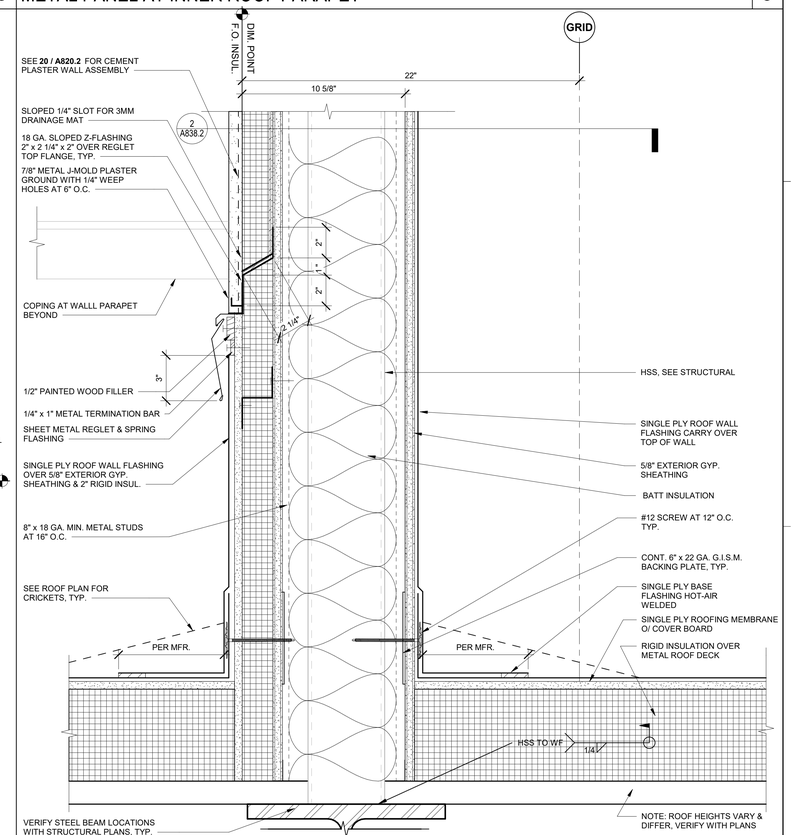

PLASTER WALL FINISH AT INNER ROOF PARAPET 3" = 1'-0" | 5

PLOT DATE: 11/10/2025 9:05:45 AM

IDENTIFICATION STAMP
DIV. OF THE STATE ARCHITECT
APP: 02-122821 INC: 2
REVIEWED FOR
SS ☑ FLS ☑ ACS ☑
DATE: 11/20/2025

Teter, Inc. expressly reserves its common law copyright and other property rights in these plans. This document, the ideas and designs incorporated herein, as an instrument of professional service, is not to be used in whole or in part, for any other project without prior written authorization.

MARK	DATE	DESCRIPTION
A.	11/13/2025	DSA BACKCHECK

LICENSED ARCHITECT ★ STATE OF CALIFORNIA ★ CHRISTOPHER J. CAMPBELL ★ C-30232 ★ EXPIRATION DATE 08-31-2027

TETER, INC.
ARCHITECTS ENGINEERS CONNECTED
FRESNO HEADQUARTERS
VISALIA | BAKERSFIELD | MODESTO | SAN LUIS OBISPO

TETER

VISALIA CAMPUS UNIVERSITY CENTER
COLLEGE OF THE SEQUOIAS - INCREMENT 2
915 S. MOONEY BLVD
VISALIA, CALIFORNIA

DRAWING TITLE
ROOF DETAILS

PROJECT NO.
22-12498

DRAWING
A838.2

\\tet-file1\Users\tara.chong_TETR\Documents\12498-A-UC_tara.chong.rvt

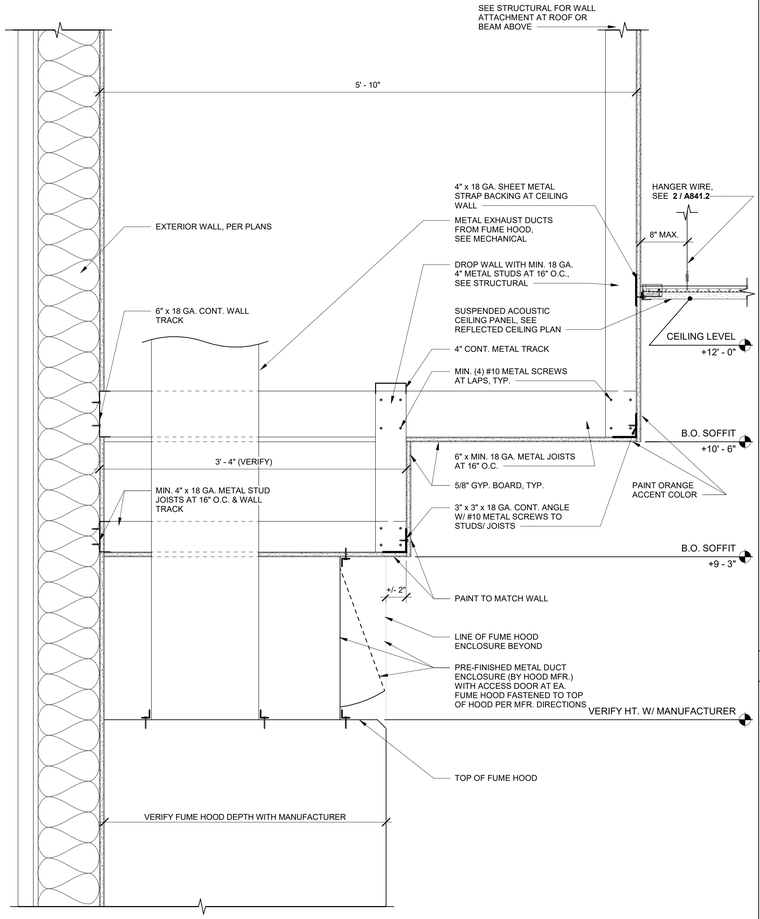

GYP. BD. CEILING SOFFIT/ CHASE AT DUCTS FROM FUME HOOD

1 1/2" = 1'-0" | 22

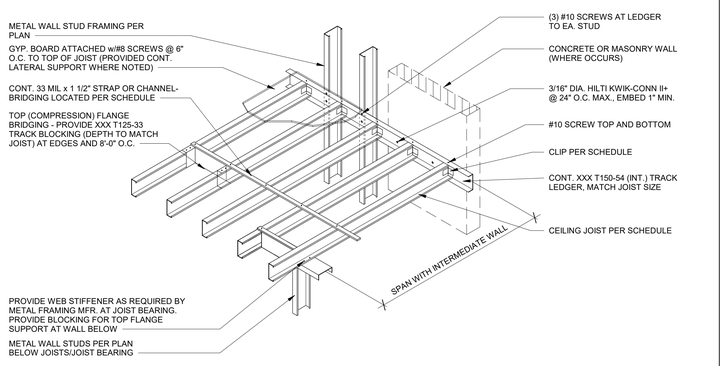

GENERAL NOTES:

1. DESIGNED FOR 12 psf DL (UP TO (2) LAYERS OF 5/8" GYP. BOARD) AND 10 psf LL.
2. IF SPAN OR LOADING CONDITION IS DIFFERENT THAN INDICATED, CONTACT ARCHITECT.
3. ILLUSTRATION IS FOR INFORMATION PURPOSES ONLY AND DOES NOT REFLECT A SPECIFIC LOCATION.

EXTERIOR CEILING FRAMING SCHEDULE

MAX. SPAN	MIN. JOIST SIZE & SPACING	BRIDGING LOCATION	CONNECTION OF JOIST TO LEDGER
6'-0"	600S162-33 @ 16" O.C.	ONE ROW AT MID-SPAN	LS545 w/(2) #10 SCREWS EA. LEG OR, L50 w/(2) #10 SCREWS EA. LEG
9'-0"	600S200-43 @ 16" O.C.	ONE ROW AT MID-SPAN	LS545 w/(2) #10 SCREWS EA. LEG OR, L50 w/(2) #10 SCREWS EA. LEG

CEILING FRAMING - EXTERIOR (MTL.)

1/2" = 1'-0" | 12

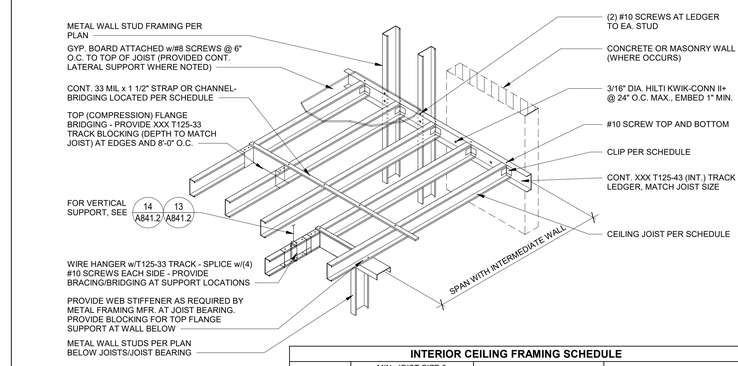

GENERAL NOTES:

1. DESIGNED FOR 12 psf DL (UP TO (2) LAYERS OF 5/8" GYP. BOARD) AND 10 psf LL.
2. IF SPAN OR LOADING CONDITION IS DIFFERENT THAN INDICATED, CONTACT ARCHITECT.
3. ILLUSTRATION IS FOR INFORMATION PURPOSES ONLY AND DOES NOT REFLECT A SPECIFIC LOCATION.

INTERIOR CEILING FRAMING SCHEDULE

MAX. SPAN	MIN. JOIST SIZE & SPACING	BRIDGING LOCATION	CONNECTION OF JOIST TO LEDGER
6'-0"	362S162-33 @ 16" O.C.	ONE ROW AT MID-SPAN	LS543 w/(2) #10 SCREWS EA. LEG OR, L30 w/(2) #10 SCREWS EA. LEG
9'-0"	362S200-43 @ 16" O.C.	ONE ROW AT MID-SPAN	LS543 w/(2) #10 SCREWS EA. LEG OR, L30 w/(2) #10 SCREWS EA. LEG
12'-0"	600S162-43 @ 16" O.C.	ONE ROW AT MID-SPAN	LS545 w/(2) #10 SCREWS EA. LEG OR, L50 w/(3) #10 SCREWS EA. LEG
15'-0"	600S200-54 @ 16" O.C.	TWO ROWS AT 1/3 POINTS	LS545 w/(2) #10 SCREWS EA. LEG OR, L50 w/(3) #10 SCREWS EA. LEG
20'-0"	600S300-68 @ 16" O.C.	TWO ROWS AT 1/3 POINTS	LS545 w/(2) #10 SCREWS EA. LEG OR, L50 w/(3) #10 SCREWS EA. LEG

CEILING FRAMING - INTERIOR (MTL.) (FOR MECH. PLATFORM FRAMING, SEE STRUCT.)

1/2" = 1'-0" | 2

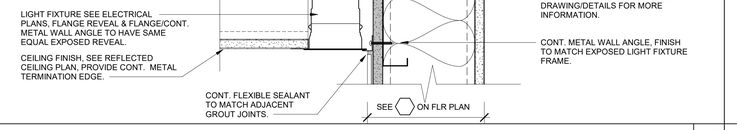

RECESSED CEILING LIGHT AT WALL

3" = 1'-0" | 13

NOTE:
CLIP TO LEDGER AT EA. END OF DOUBLE JOISTS (NOT SHOWN) SHOULD MATCH TYP. CEILING JOIST CLIP

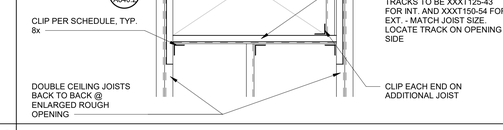

EXTERIOR CLIP SCHEDULE

MAX. SPAN	CLIP
9'-0"	LS543 w/(2) #10 SCREWS EA. LEG OR, L30 w/(2) #10 SCREWS EA. LEG
12'-0"	LS545 w/(2) #10 SCREWS EA. LEG OR, L50 w/(3) #10 SCREWS EA. LEG
15'-0"	LS545 w/(2) #10 SCREWS EA. LEG OR, L50 w/(3) #10 SCREWS EA. LEG

INTERIOR CLIP SCHEDULE

MAX. SPAN	CLIP
9'-0"	LS543 w/(2) #10 SCREWS EA. LEG OR, L30 w/(2) #10 SCREWS EA. LEG
12'-0"	LS545 w/(2) #10 SCREWS EA. LEG OR, L50 w/(3) #10 SCREWS EA. LEG

CEILING / WALL ACCESS PANELS

1" = 1'-0" | 3

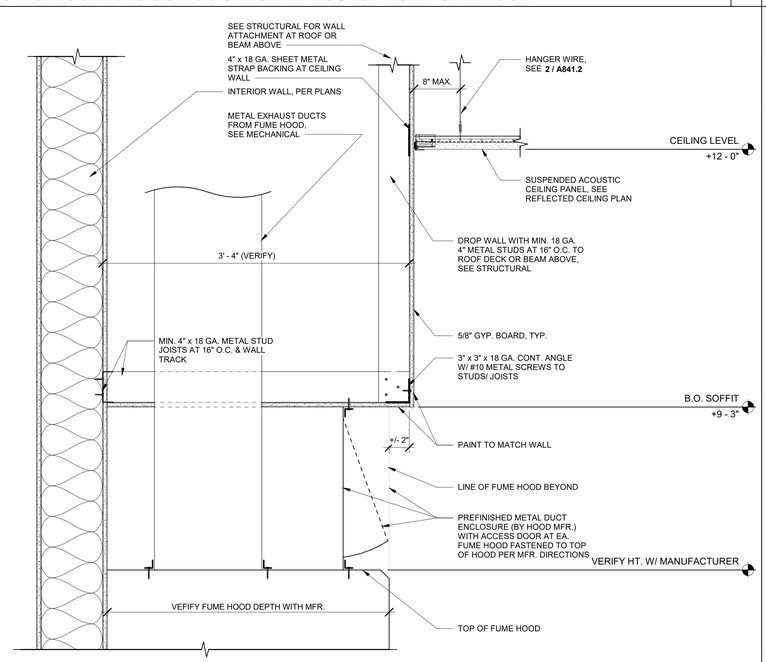

GYP. BD. CLG. SOFFIT/ CHASE AT DUCTS FROM FUME HOOD AT 12'-0" CEILING

1 1/2" = 1'-0" | 25

NOTE: ALL INTERIOR TRIM & COOLER BOX PANEL TO PANEL ATTACHMENT & ANCHORAGE TO SLAB IS BY COOLER BOX MANUFACTURER/INSTALLER.

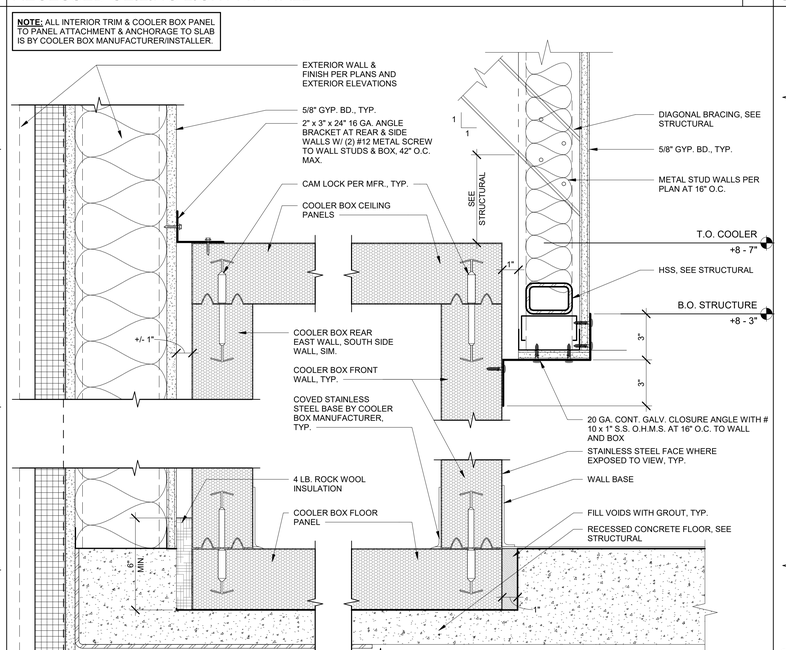

SECTION THROUGH COOLER BOX CEILING & REAR/FRONT WALLS

3" = 1'-0" | 20

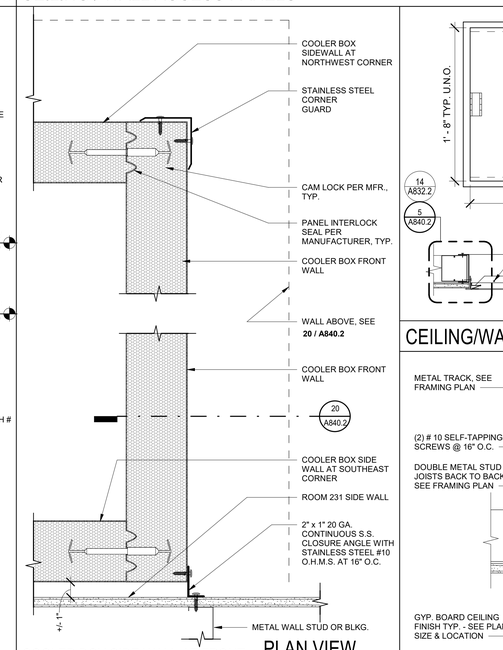

COOLER BOX SIDE WALL AT FRONT CORNERS

3" = 1'-0" | 15

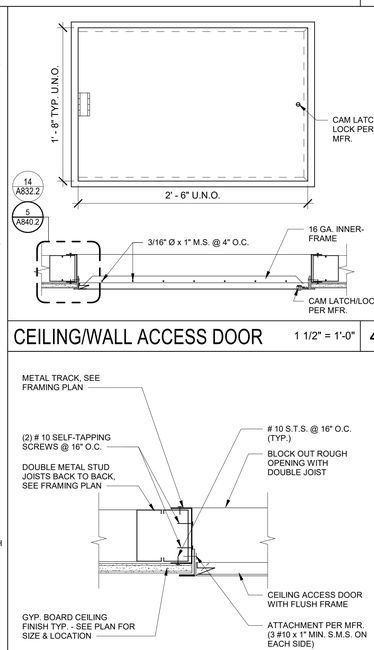

CEILING/WALL ACCESS DOOR

1 1/2" = 1'-0" | 4

CLG./ WALL ACCESS DOOR EDGE

3" = 1'-0" | 5

IDENTIFICATION STAMP
DIV. OF THE STATE ARCHITECT
APP: 02-122821 INC: 2
REVIEWED FOR
SS ☑ FLS ☑ ACS ☑
DATE: 11/20/2025

Teter, Inc. expressly reserves its common law copyright and other property rights in these plans. This document, the ideas and designs incorporated herein, as an instrument of professional service, is not to be used in whole or in part, for any other project without prior written authorization.

MARK	DATE	DESCRIPTION
A	11/13/2025	DSA BACKCHECK

TETER, INC.
FRESNO HEADQUARTERS
VISALIA | BAKERSFIELD | MODESTO | SAN LUIS OBISPO
ARCHITECTS ENGINEERS CONNECTED

VISALIA CAMPUS UNIVERSITY CENTER
COLLEGE OF THE SEQUOIAS - INCREMENT 2
915 S. MOONEY BLVD
VISALIA, CALIFORNIA

DRAWING TITLE
CEILING DETAILS

PROJECT NO.
22-12498

DRAWING
A840.2

PLOT DATE: 11/10/2025 9:05:53 AM

\\tet-file1\Users\tara.chong_TETR\Documents\12498-A-UC_tara.chong.rvt

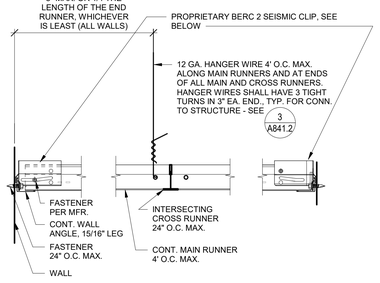

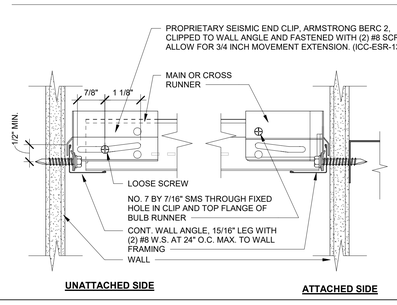

CEILING PERIMETER N.T.S. 27

(REF. DSA IR 25-2 DETAIL 2.35)

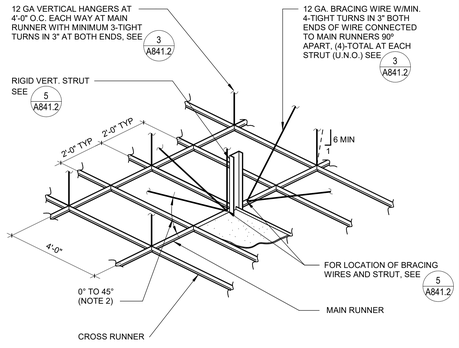

NOTES:

1. STRUTS SHALL NOT REPLACE HANGER WIRES.
2. THE MINIMUM ACCEPTABLE ANGLE IS DETERMINED SUCH THAT THE WIRES DO NOT INTERFERE WITH THE RUNNERS, LIGHT FIXTURES, ETC. AND REMAIN STRAIGHT AND UNOBSTRUCTED.
3. FOR LIGHT STRUCTURE AIR TERMINAL SUPPORT, SEE 18 A841.2
4. FOR TYPICAL CEILING WIRE SPLICES, SEE 4 A841.2

SUSPENDED CEILING - SUSPENSION & BRACING ASSEMBLY 3" = 1'-0" 17

(REF. DSA IR 25-2 DETAIL 2.12)

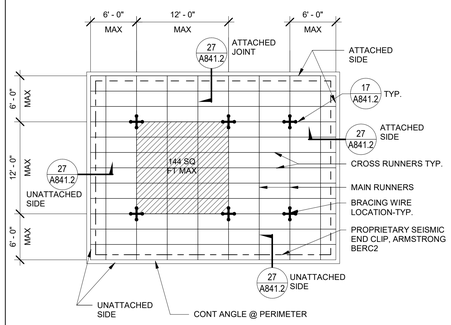

NOTE:
BRACING WIRES AND COMP. STRUT SHALL OCCUR AT EVERY 144 SQ. FT. MAX. IN ROOMS OVER 144 SQ. FT.

TYPICAL SUSPENDED CEILING NOTES

CEILING SYSTEM NOTES FROM DSA IR 25-2, APPENDIX 'A,' NOTES 1.01 - 8.01

1. **-CEILING SYSTEM GENERAL**
1.01 -CEILING SYSTEM COMPONENTS SHALL COMPLY WITH ASTM C 635 AND SECTION 5.1 OF ASTM E 580.
1.02 -THE CEILING GRID SYSTEM MUST BE RATED HEAVY DUTY AS DEFINED BY ASTM C635.
1.03 -SUSPENSION COMPONENTS:
& ARMSTRONG WORLD INDUSTRIES INC.; PRELUDE XL, ESR 1308.
MAIN RUNNER: NO. 7301
CROSS RUNNERS: NO. XL7341 (4'), XL7328 (2')
1.04 PERIMETER SEISMIC CLIPS: NO. BERC2
WALL ANGLE: 15/16" LEGS
1.05 -CEILING PANELS SHALL NOT SUPPORT ANY LIGHT FIXTURES, AIR TERMINALS, OR DEVICES.
1.06 -FOR ACOUSTICAL TILE PANELS OF ANY MATERIAL OTHER THAN MINERAL OR GLASS FIBER, A 3/4 INCH CLEARANCE SHALL BE PROVIDED BETWEEN THE PANEL AND THE WALL ON THE SIDES OF THE CEILING FREE TO SLIP. CLEARANCE BETWEEN CEILING FRID RUNNERS AND WALLS SHALL COMPLY WITH THE DETAILS ON THESE DRAWINGS REGARDLESS OF CEILING TILE MATERIAL.

2. **-MATERIALS**
2.01 -CEILING WIRE SHALL BE CLASS 1 ZINC COATED (GALVANIZED) CARBON STEEL CONFORMING TO ASTM A 641. WIRE SHALL BE 12 GAUGE (0.106 INCH DIAMETER) WITH SOFT TEMPER AND MINIMUM TENSILE STRENGTH OF 70 KSI.
2.02 GALVANIZED SHEET STEEL (INCLUDING THAT USED FOR METAL STUD COMPRESSION STRUTS) SHALL CONFORM TO ASTM A653, OR OTHER EQUIVALENT SHEET STEEL LISTED IN SECTION A3.1 OF THE NORTH AMERICAN SPECIFICATION FOR THE DESIGN OF COLD-FORMED STEEL STRUCTURAL MEMBERS, (AISI S100). MATERIAL 43 MIL (18 GAUGE) THICK AND LIGHTER SHALL HAVE MINIMUM YIELD STRENGTH OF 33 KSI. MATERIAL 54 MIL (16 GAUGE) THICK AND HEAVIER SHALL HAVE A MINIMUM YIELD STRENGTH OF 50KSI.
2.03 -ELECTRICAL METALLIC TUBING (EMT) SHALL BE ANSI C80.3/UL 797 CARBON STEEL WITH G90 GALVANIZING. EMT SHALL HAVE A MINIMUM YIELD STRENGTH (FY) OF 30 KSI AND MINIMUM ULTIMATE STRENGTH (FU) OF 48 KSI.

3. **-ATTACHMENT OF HANGER AND BRACING WIRES**
3.01 -ALL CEILING HANGER AND BRACING WIRES SHALL BE SEPARATED AT LEAST 6 INCHES FROM ALL UNBRACED DUCTS, PIPES, CONDUIT, ETC.
3.02 -HANGER AND BRACING WIRES SHALL NOT ATTACH TO OR BEND AROUND OBSTRUCTIONS INCLUDING BUT NOT LIMITED TO PIPING, DUCTWORK, CONDUIT, AND EQUIPMENT.
3.03 -HANGER WIRES THAT ARE MORE THAN ONE HORIZONTAL IN 6 VERTICAL OUT OF PLUMB SHALL HAVE COUNTER SLOPING WIRES.
3.04 -SLACK SAFETY WIRES SHALL BE CONSIDERED HANGER WIRES FOR INSTALLATION AND TESTING REQUIREMENTS.
3.05 -HANGER AND BRACING WIRE ANCHORAGE TO THE STRUCTURE SHALL BE INSTALLED SUCH THAT THE DIRECTION OF THE ANCHORAGE ALIGNS WITH THE DIRECTION OF THE WIRE. BRACING WIRE CEILING CLOPS SHALL BE BENT AS SHOWN IN THE DETAILS AND ROTATED AS REQUIRED TO ALIGN WITH THE DIRECTION OF THE WIRE. SCREWS IN WOOD SHALL BE INSTALLED TO ALIGN WITH THE DIRECTION OF THE WIRE.

4. **-FASTENERS AND WELDING**
4.01 -SHEET METAL SCREWS SHALL COMPLY WITH ASTM C 1513, ASME B 18.6.3.. PENETRATION OF SCREWS THROUGH JOINED MATERIAL SHALL NOT BE LESS THAN THREE EXPOSED THREADS.
4.02 -EXPANSION ANCHORS SHALL BE (NONE REQUIRED FOR PROJECT CONDITIONS).
4.03 -POWER ACTUATED FASTENERS SHALL BE (NONE REQUIRED FOR PROJECT CONDITIONS).
4.04 -IF NOT OTHERWISE SPECIFIED IN THE EVALUATION REPORT, POWER ACTUATED FASTENERS INSTALLED IN STEEL SHALL BE INSTALLED SO THE ENTIRE POINTED END OF THE FASTENER IS DRIVEN THROUGH THE STEEL MEMBER.
4.05 -POWER ACTUATED FASTENERS IN CONCRETE ARE NOT PERMITTED FOR BRACING WIRES.
4.06 -CONCRETE REINFORCEMENT AND PRESTRESSING TENDONS SHALL BE LOCATED BY NON-DESTRUCTIVE MEANS PRIOR TO INSTALLING POST-INSTALLED ANCHORS.
4.07 -WELDING SHALL BE IN ACCORDANCE WITH AWS D1.3 USING E60XX SERIES ELECTRODES.

5. **-TESTING**
5.01 -ALL FIELD TESTING MUST BE PERFORMED IN THE PRESENCE OF THE PROJECT INSPECTOR.
5.02 -POST-INSTALLED ANCHORS IN CONCRETE USED TO SUPPORT HANGER WIRES SHALL BE TESTED AT A FREQUENCY OF 10 PERCENT. POWER-ACTUATED FASTENERS IN CONCRETE SHALL BE FIELD TESTED FOR 200 POUNDS IN TENSION. ALL OTHER POST-INSTALLED ANCHORS IN CONCRETE SHALL BE TESTED IN ACCORDANCE WITH CBC SECTION 1910A.5.
5.03 -POST-INSTALLED ANCHORS IN CONCRETE USED TO ATTACH BRACING WIRES SHALL BE TESTED AT A FREQUENCY OF 50 PERCENT IN ACCORDANCE WITH CBC SECTION 1910A.5.

6. **-LIGHT FIXTURES**
6.01 -ALL LIGHT FIXTURES SHALL BE POSITIVELY ATTACHED TO THE CEILING SUSPENSION SYSTEMS BY MECHANICAL MEANS TO RESIST A HORIZONTAL FORCE EQUAL TO THE WEIGHT OF THE LIGHT FIXTURE. A MINIMUM OF TWO SCREWS OR APPROVED FASTENERS ARE REQUIRED AT EACH LIGHT FIXTURE PER ASTM E580 SECTION 5.3.1.
6.02 -SURFACE MOUNTED FIXTURES SHALL BE ATTACHED TO THE MAIN RUNNER WITH AT LEAST 2 POSITIVE CLAMPING DEVICES. THE CLAMPING DEVICE SHALL COMPLETELY SURROUND THE SUPPORTING CEILING RUNNER AND BE MADE OF 14 GAUGE MINIMUM THICKNESS SHEET STEEL. ROTATIONAL SPRING CATCHES DO NOT COMPLY. A 12 GAUGE SLACK SAFETY WIRE SHALL BE CONNECTED FROM EACH CLAMPING DEVICE TO THE STRUCTURE ABOVE. PROVIDE ADDITIONAL SUPPORTS WHEN LIGHT FIXTURES ARE 8 FEET OR LONGER, OR EXCEED 56 LBS. MAXIMUM SPACING BETWEEN SUPPORTS SHALL NOT EXCEED 8 FEET.
6.03 -LIGHT FIXTURES WEIGHING LESS THAN OR EQUAL TO 10 LBS SUPPORTED DIRECTLY ON THE CEILING RUNNERS SHALL HAVE A MINIMUM OF ONE 12 GAUGE SLACK SAFETY WIRE CONNECTED TO THE FIXTURE HOSING AND THE STRUCTURE ABOVE.
6.04 -LIGHT FIXTURES WEIGHING GREATER THAN 10 LBS BUT LESS THAN OR EQUAL TO 56 POUNDS SUPPORTED DIRECTLY ON THE CEILING RUNNERS SHALL HAVE A MINIMUM OF TWO 12 GAUGE SLACK SAFETY WIRES CONNECTED FROM THE FIXTURE HOUSING AT DIAGONAL CORNERS TO THE STRUCTURE ABOVE.
EXCEPTION: ALL LIGHT FIXTURES GREATER THAN 2 BY 4 FT WEIGHING LESS THAN 56 LBS SHALL HAVE A 12 GAUGE SLACK SAFETY WIRE AT EACH CORNER.
6.05 -ALL LIGHT FIXTURES WEIGHING GREATER THAN 56 POUNDS SHALL BE INDEPENDENTLY SUPPORTED FROM THE STRUCTURE ABOVE.

7. **-SERVICES WITHIN THE CEILING**
7.01 -ALL FLECIBLE SPRINKLER HOSE FITTING MOUNTING BRACKETS, CEILING-MOUNTED AIR TERMINALS, OR OTHER SERVICES SHALL BE POSITIVELY ATTACHED TO THE CEILING SUSPENSION SYSTEMS BY MECHANICAL MEANS. SCREWS OR OTHER FASTENERS SPECIFIED ON THE DRAWINGS ARE REQUIRED. A MINIMUM OF (2) ATTACHMENTS ARE REQUIRED AT EACH COMPONENT.
7.02 -CEILING-MOUNTED SERVICES WEIGHING LESS THAN OR EQUAL TO 20 LBS SHALL HAVE (1) 12 GAUGE SLACK SAFETY WIRE ATTACHED FROM THE TERMINAL OR SERVICE TO THE STRUCTURE ABOVE.
7.03 -CEILING-MOUNTED SERVICES WEIGHING MORE THAN 20 LBS BUT LESS THAN OR EQUAL TO 56 LBS SHALL HAVE (2) 12 GAUGE SLACK SAFETY WIRES (AT DIAGONAL CORNERS) CONNECTED FROM THE TERMINAL OR SERVICE TO THE STRUCTURE ABOVE.
7.04 -CEILING-MOUNTED SERVICES WEIGHING MORE THAN 56 LBS SHALL BE INDEPENDENTLY SUPPORTED FROM THE STRUCTURE ABOVE.

8. **-OTHER DEVICES WITHIN THE CEILING**
8.01 -ALL LIGHTWEIGHT MISCELLANEOUS DEVICES, SUCH AS STROBE LIGHTS, OCCUPANCY SENSORS, SPEAKERS, EXIT SIGNS, ETC., SHALL BE ATTACHED TO THE CEILING GRID. IN ADDITION, DEVICES WEIGHING MORE THAN 10 LBS SHALL HAVE A 12 GAUGE SLACK SAFETY WIRE ANCHORED TO THE STRUCTURE ABOVE. DEVICES WEIGHING MORE THAN 20 LBS SHALL BE SUPPORTED INDEPENDENTLY FROM THE STRUCTURE ABOVE.

TYPICAL SUSPENDED CEILING INSTALLATION N.T.S. 2

BRACKET WALL MOUNT

PROJECTION SCREEN MOUNTING 1 1/2" = 1'-0" 28

SOFFIT CORNER 1" = 1'-0" 23

(REF. DSA IR 25-2 DETAIL 2.80)

LIGHT FIXTURE / AIR TERMINAL SUPPORT DETAIL

SUSP. ACOUSTICAL CLG. LIGHT 3" = 1'-0" 18

CLG. SUPPORT TO METAL DECK 3/4" = 1'-0" 13

(REF. DSA IR 25-2 DETAIL 4.10)

HANGER AND BRACING WIRE CONNECTION - TYP. WIRE 3" = 1'-0" 3

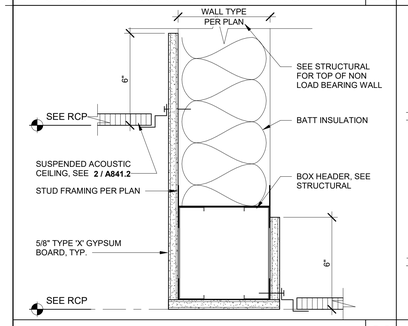

CORRIDOR SOFFIT 3" = 1'-0" 29

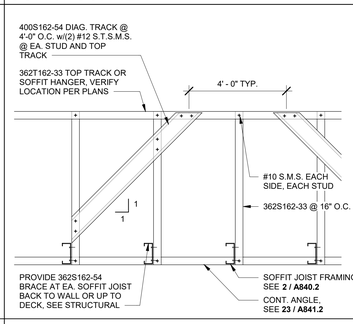

SOFFIT DIAGONAL STRAP 1" = 1'-0" 24

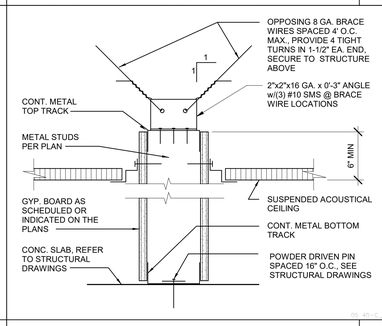

WALL BRACING (WIRE) 3" = 1'-0" 19

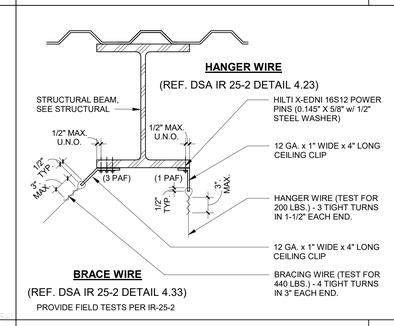

CEILING SUPPORT WIRE TO BEAM 1/2" = 1'-0" 14

(REF. DSA IR 25-2 DETAIL 6.10)

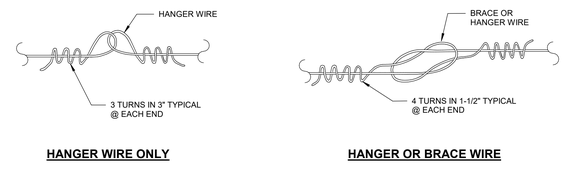

NOTES:
WIRE SPLICES ARE SHOWN LOOSELY TIED FOR ILLUSTRATIVE PURPOSES ONLY AND SHALL BE DRAWN TIGHT TO COMPLETE INSTALLATION WHEN CONSTRUCTED.

CEILING WIRE SPLICES 3" = 1'-0" 4

(REF. DSA IR 25-2.13 DETAIL 5.21)

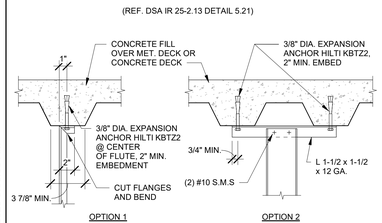

STRUT CONNECTION TO CONCRETE OVER METAL DECK

(REF. DSA IR 25-2.13 DETAIL 5.40)

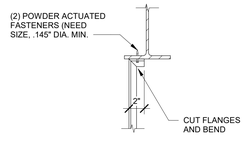

STRUT CONNECTION TO STRUCTURAL STEEL

(REF. DSA IR 25-2.13 DETAIL 5.20 & 3.21)

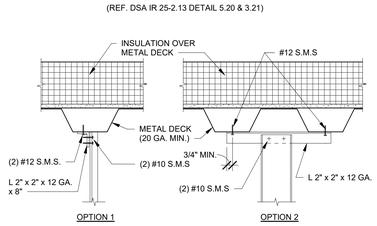

STRUT CONNECTION TO METAL DECK

CHANNEL COMPRESSION STRUT	MAXIMUM LENGTH
250S125-33	5' - 0"
250S137-33	6' - 10"
362S137-33	8' - 0"
250S137-43	8' - 10"
400S137-43	10' - 10"

CHANNEL STRUT TABLE

COMPRESSION STRUT TO STRUCTURE CONNECTIONS 1 1/2" = 1'-0" 15

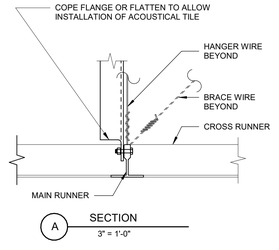

CHANNEL TYP STRUT

(REF. DSA IR 25-2 DETAIL 3.10)

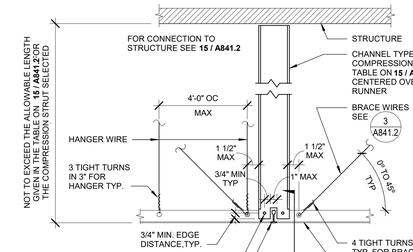

SUSPENDED ACOUSTICAL CEILING COMPRESSION STRUT 1 1/2" = 1'-0" 5

PLOT DATE: 11/10/2025 9:06:03 AM

IDENTIFICATION STAMP
DIV. OF THE STATE ARCHITECT
APP: 02-122821 INC: 2
REVIEWED FOR
SS ☑ FLS ☑ ACS ☑
DATE: 11/20/2025

Teter, Inc. expressly reserves its common law copyright and other property rights in these plans. This document, the ideas and designs incorporated herein, as an instrument of professional service, is not to be used in whole or in part, for any other project without prior written authorization.

MARK	DATE	DESCRIPTION
A	11/13/2025	DSA BACKCHECK

TETER, INC.
ARCHITECTS ENGINEERS CONNECTED
FRESNO HEADQUARTERS
VISALIA | BAKERSFIELD | MODESTO | SAN LUIS OBISPO

VISALIA CAMPUS UNIVERSITY CENTER
COLLEGE OF THE SEQUOIAS - INCREMENT 2
915 S. MOONEY BLVD
VISALIA, CALIFORNIA

DRAWING TITLE
CEILING DETAILS

PROJECT NO.
22-12498

DRAWING
A841.2

\\tet-file1\Users\tara.chong_TETR\Documents\12498-A-UC_tara.chong.rvt

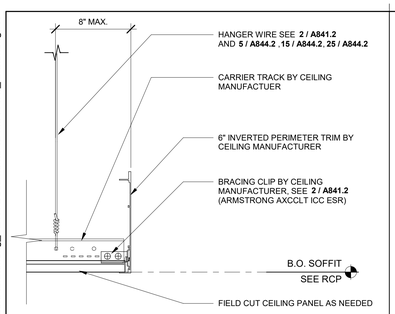

CEILING PERIMETER TRIM 3" = 1'-0" 26

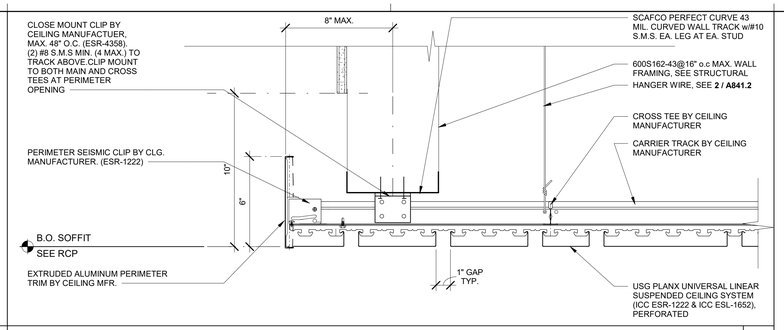

ENTRY LOBBY CEILING OPENING 3" = 1'-0" 16

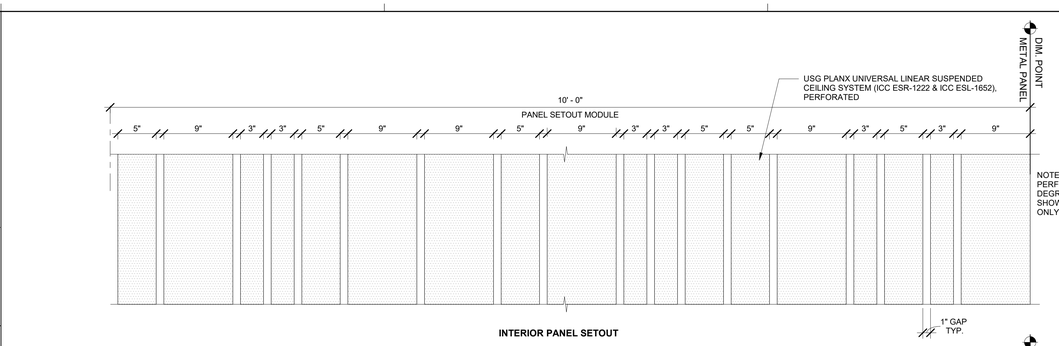

NOTE: INTERIOR AND EXTERIOR PANELS TO ALIGN AND TO APPEAR AS IF CONTINUOUS

ENTRY CANOPY SOFFIT PANEL SETOUT 1 1/2" = 1'-0" 2

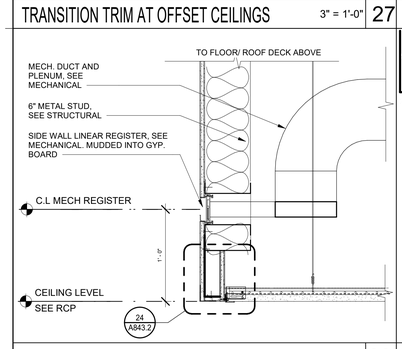

MECHANICAL REGISTER AT WALL 1 1/2" = 1'-0" 28

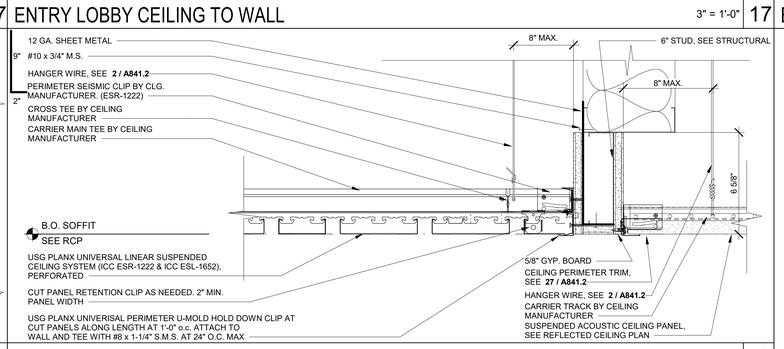

ENTRY LOBBY CEILING TO WALL 3" = 1'-0" 18

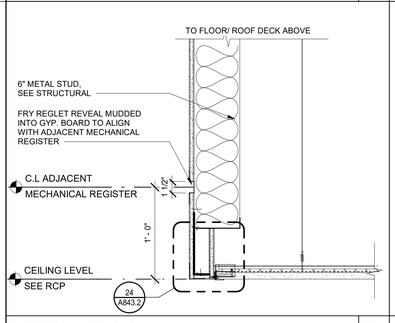

REVEAL AT WALL 1 1/2" = 1'-0" 29

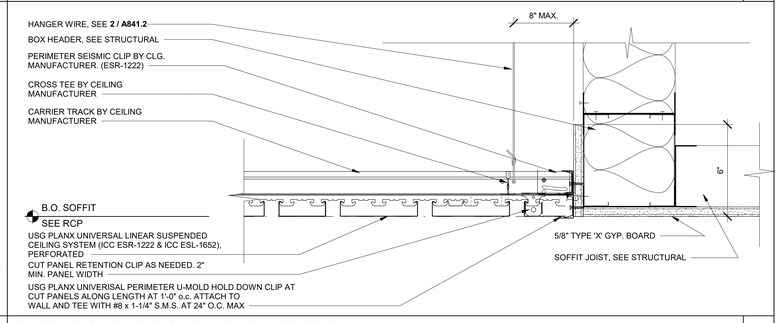

ENTRY LOBBY TO GYP. BOARD SOFFIT 3" = 1'-0" 19

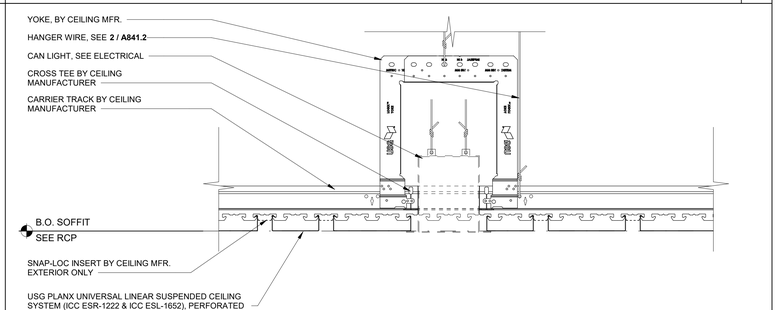

ENTRY LOBBY CAN LIGHT 3" = 1'-0" 20

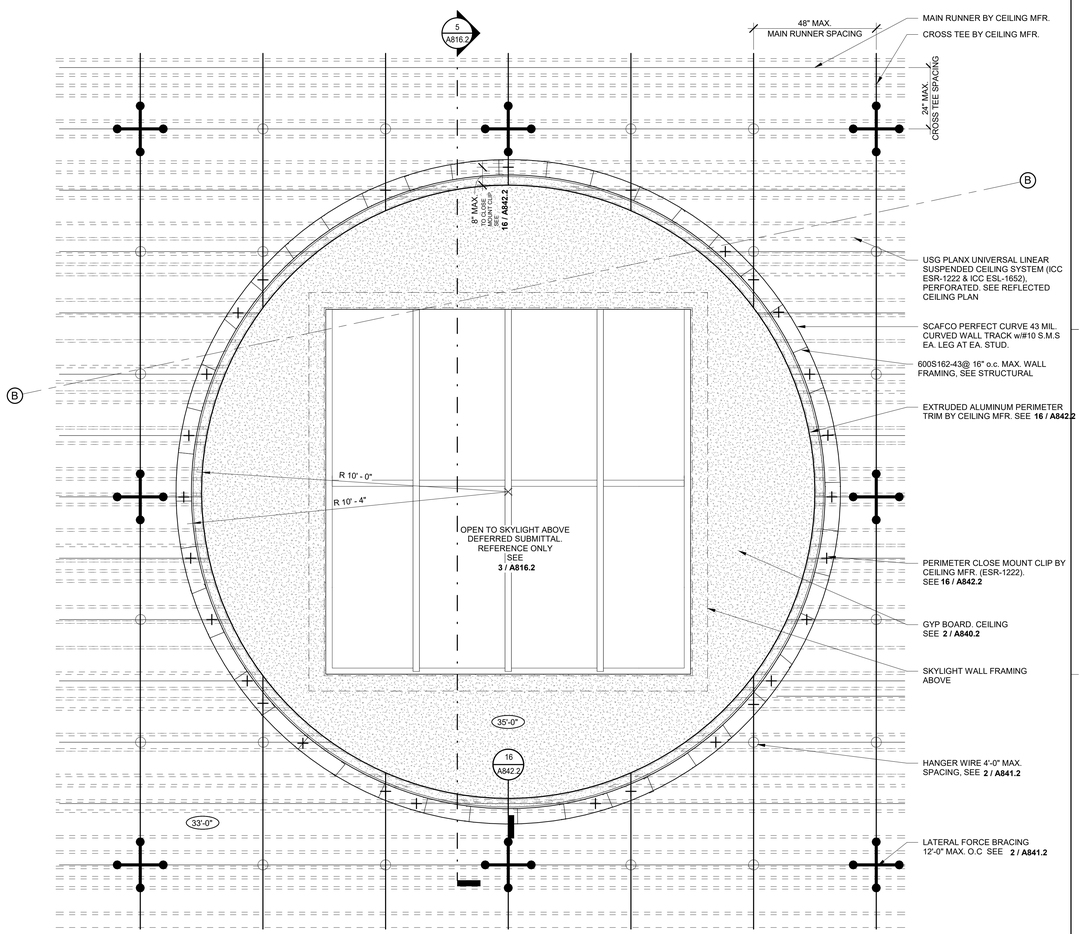

OPENING FRAMING PLAN 1/2" = 1'-0" 5

IDENTIFICATION STAMP
DIV. OF THE STATE ARCHITECT
APP: 02-122821 INC: 2
REVIEWED FOR
SS ☑ FLS ☑ ACS ☑
DATE: 11/20/2025

Teter, Inc. expressly reserves its common law copyright and other property rights in these plans. This document, the ideas and designs incorporated herein, as an instrument of professional service, is not to be used in whole or in part, for any other project without prior written authorization.

MARK	DATE	DESCRIPTION
A.	11/13/2025	DSA BACKCHECK

LICENSED ARCHITECT ★ STATE OF CALIFORNIA ★ CHRISTOPHER J. CONLEY ★ EXPIRATION DATE 08-31-2026

TETER, INC.
ARCHITECTS ENGINEERS
FRESNO HEADQUARTERS
VISALIA | BAKERSFIELD | MODESTO | SAN LUIS OBISPO

TETER

VISALIA CAMPUS UNIVERSITY CENTER
COLLEGE OF THE SEQUOIAS - INCREMENT 2
915 S. MOONEY BLVD
VISALIA, CALIFORNIA

DRAWING TITLE
CEILING DETAILS

PROJECT NO.
22-12498

DRAWING
A842.2

PLOT DATE: 11/10/2025 9:06:15 AM

\\tet-file1\Users\tara.chong_TETR\Documents\12498-A-UC_tara.chong.rvt

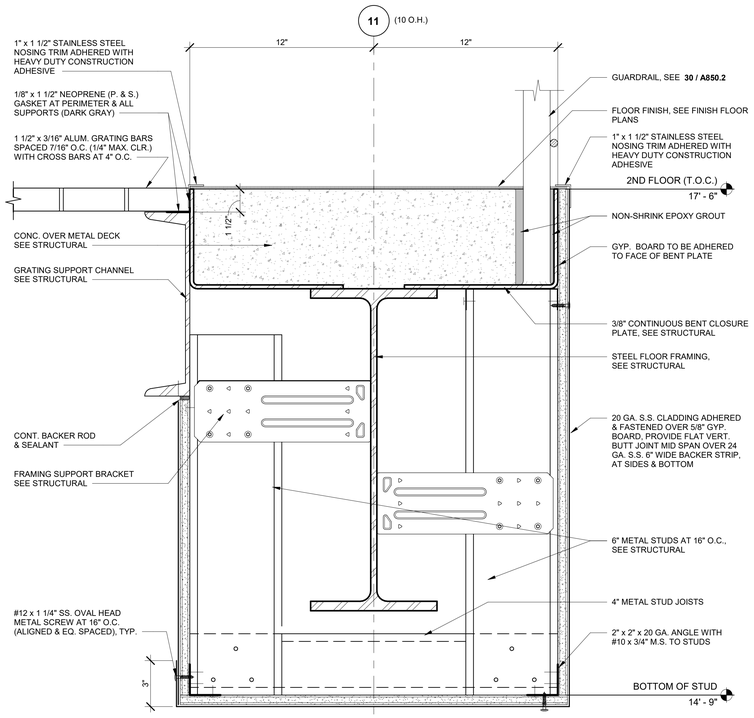

STAINLESS STEEL CLADDING AROUND BEAMS AT METAL FLOOR GRATING

3" = 1'-0" | 23

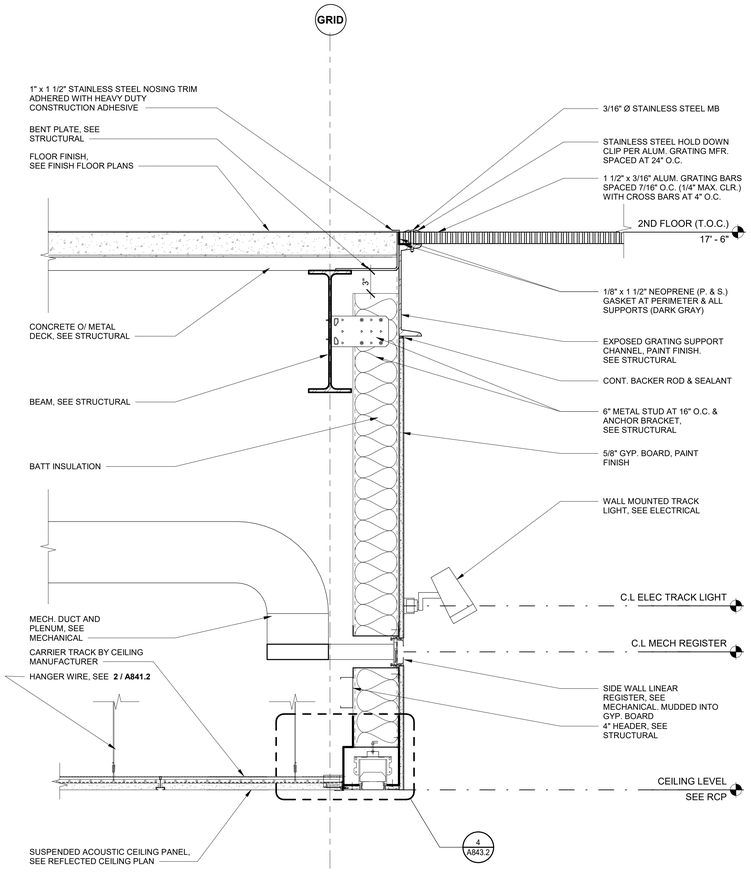

2ND FLOOR EDGE OF SLAB AT METAL GRATING

1 1/2" = 1'-0" | 12

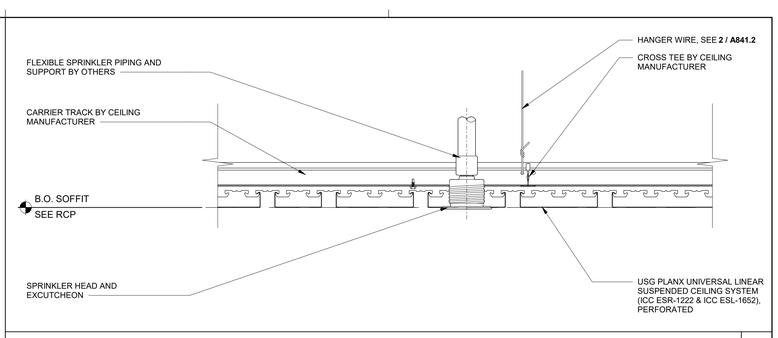

ENTRY LOBBY FIRE SPRINKLER HEAD AT INTERIOR LINEAR MTL. CLG.

3" = 1'-0" | 1

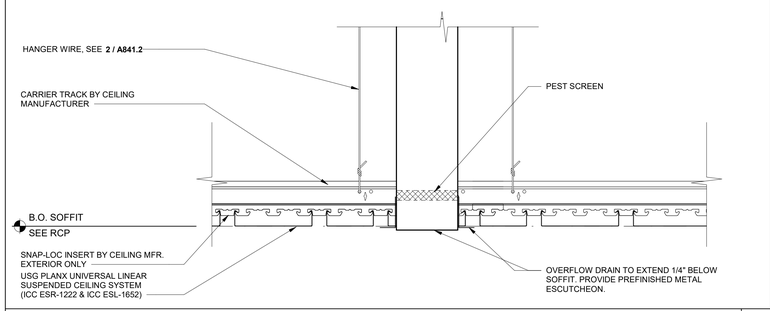

SOFFIT OVERFLOW

3" = 1'-0" | 2

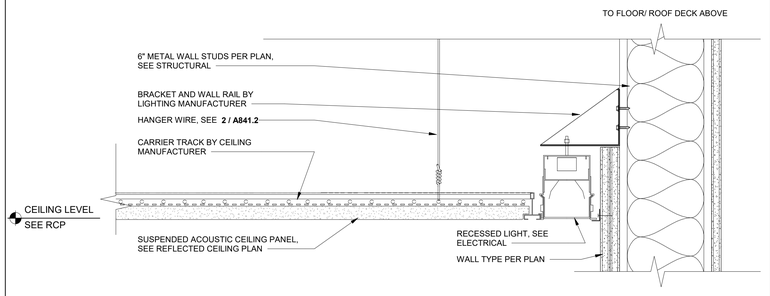

RECESSED LIGHT AT A.C.T.

3" = 1'-0" | 3

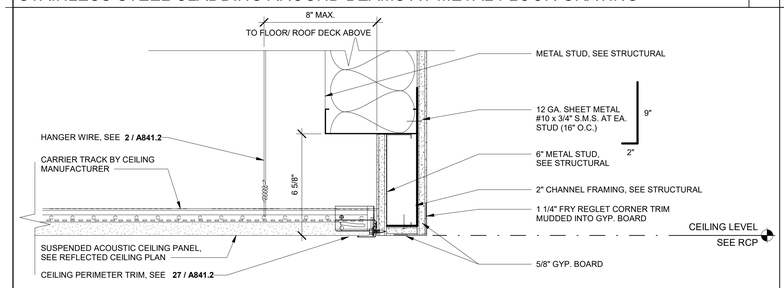

CEILING EDGE AT A.C.T. TERMINATION

3" = 1'-0" | 24

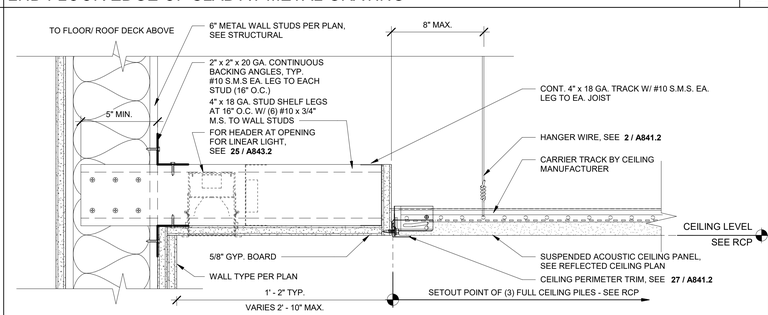

GYP. CEILING TO A.C.T. IN CORRIDOR

3" = 1'-0" | 14

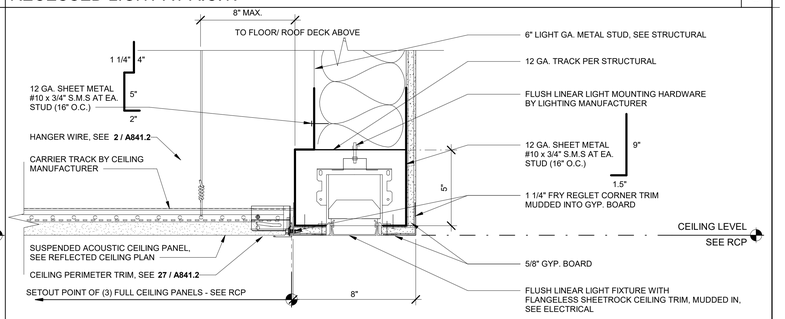

CEILING EDGE WITH LINEAR LIGHT

3" = 1'-0" | 4

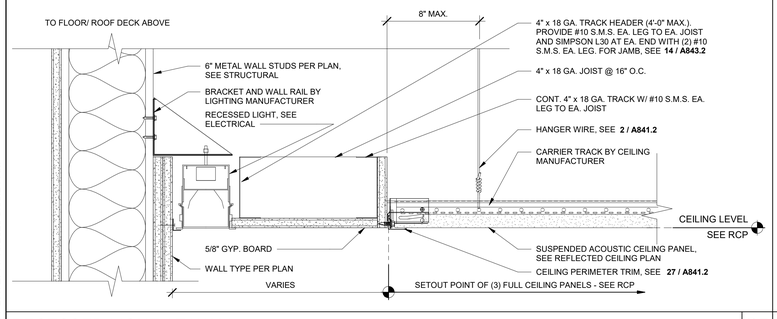

RECESSED LIGHT AT WALL

3" = 1'-0" | 25

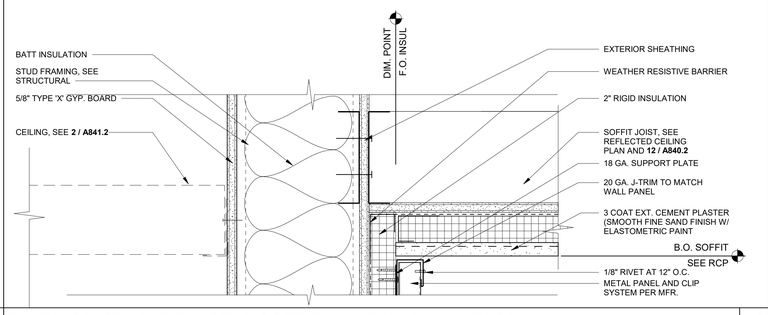

EXTERIOR CEMENT PLASTER SOFFIT AT METAL PANEL FACED WALL

3" = 1'-0" | 15

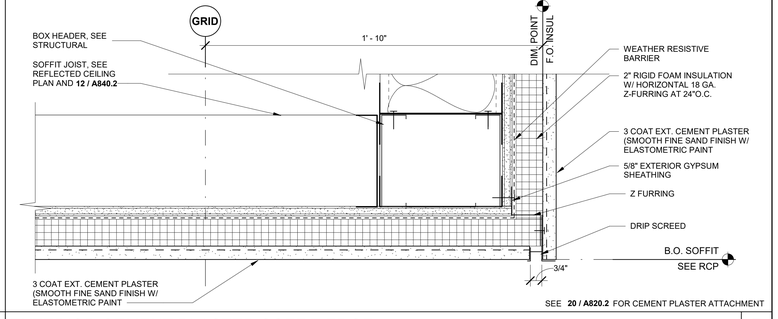

EXTERIOR CEMENT PLASTER SOFFIT EDGE

3" = 1'-0" | 5

PLOT DATE: 11/10/2025 9:06:24 AM

IDENTIFICATION STAMP
DIV. OF THE STATE ARCHITECT
APP: 02-122821 INC: 2
REVIEWED FOR
SS ☑ FLS ☑ ACS ☑
DATE: 11/20/2025

Teter, Inc. expressly reserves its common law copyright and other property rights in these plans. This document, the ideas and designs incorporated herein, as an instrument of professional service, is not to be used in whole or in part, for any other project without prior written authorization.

MARK	DATE	DESCRIPTION
A	11/13/2025	DSA BACKCHECK

LICENSED ARCHITECT — CHRISTOPHER JOHN TETER — No. C-29322 — STATE OF CALIFORNIA

TETER, INC.
FRESNO HEADQUARTERS
VISALIA | BAKERSFIELD | MODESTO | SAN LUIS OBISPO
ARCHITECTS ENGINEERS CONNECTED

VISALIA CAMPUS UNIVERSITY CENTER
COLLEGE OF THE SEQUOIAS - INCREMENT 2
915 S. MOONEY BLVD
VISALIA, CALIFORNIA

DRAWING TITLE
CEILING DETAILS

PROJECT NO.
22-12498

DRAWING
A843.2

\\tet-file1\Users\tara.chong_TETR\Documents\12498-A-UC_tara.chong.rvt

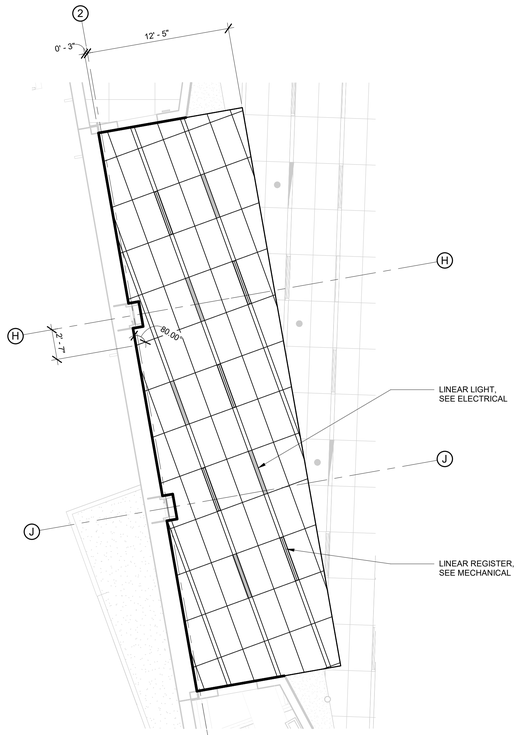

SEE 5 / A845.2 FOR SUSPENDED GYP. BOARD CEILING ABOVE

PROJECT NORTH

LECTURE ROOM 15' - 0" CEILING 3/16" = 1'-0" 25

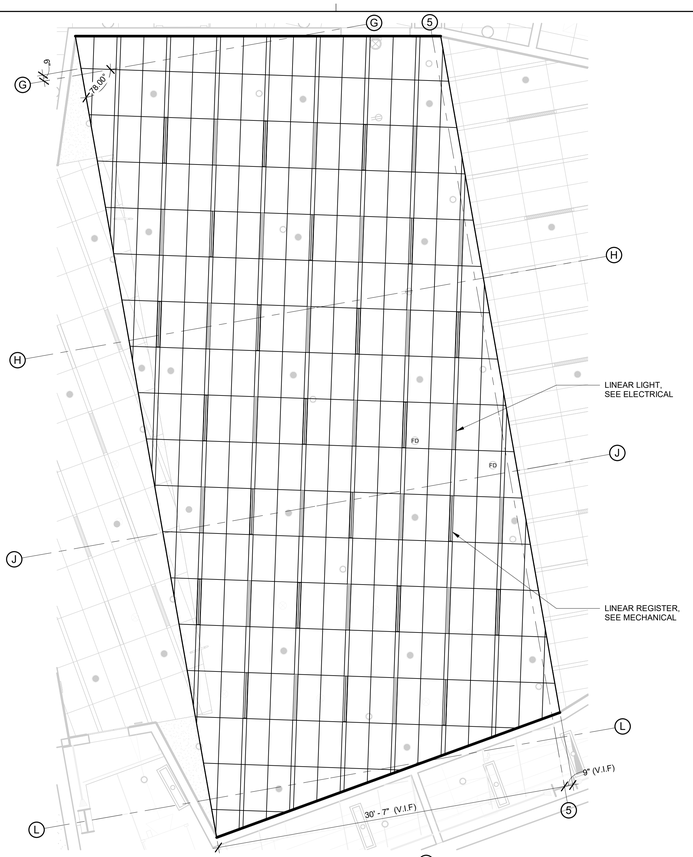

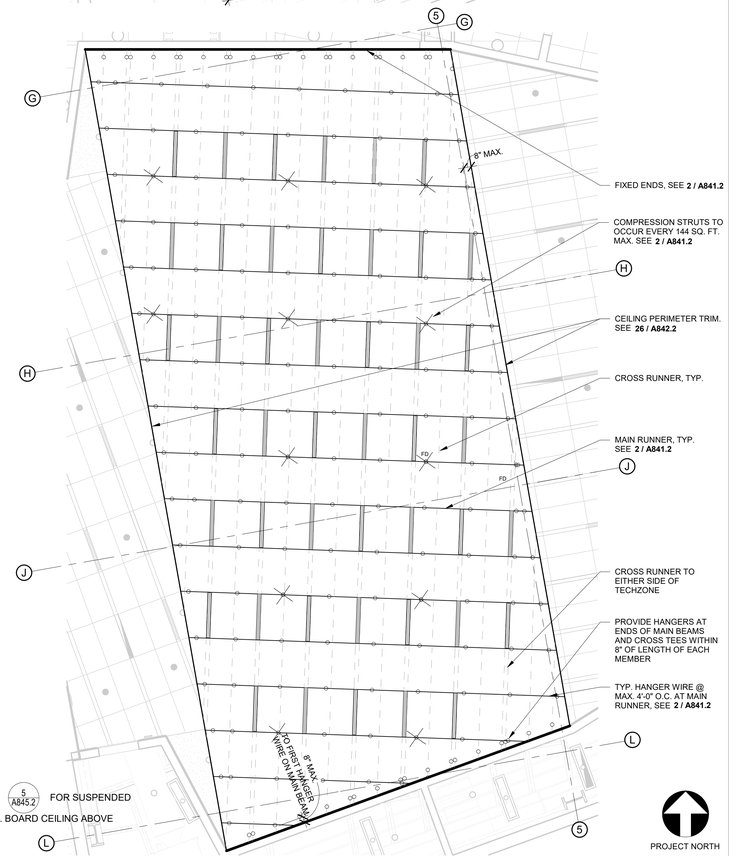

SEE 5 / A845.2 FOR SUSPENDED GYP. BOARD CEILING ABOVE

PROJECT NORTH

LECTURE ROOM 16' - 6" CEILING 3/16" = 1'-0" 15

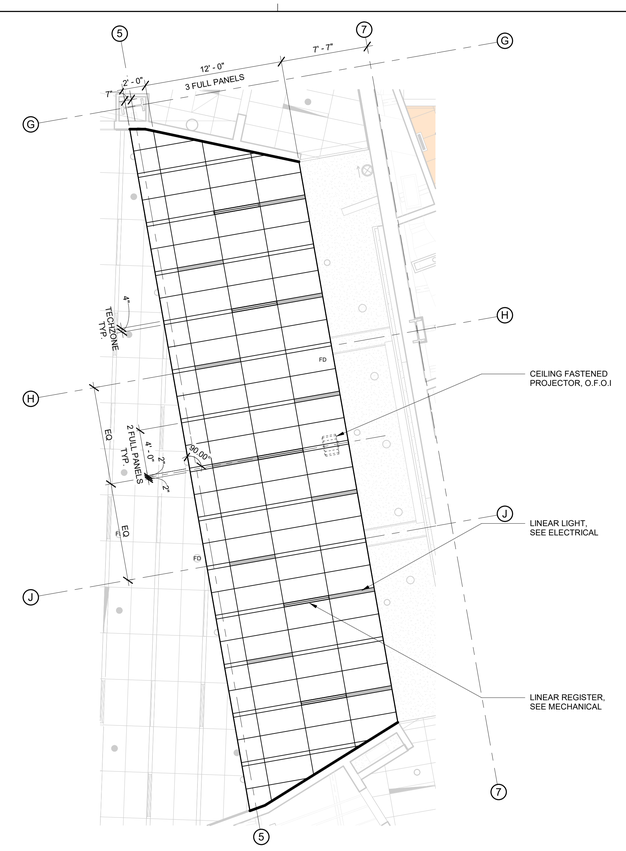

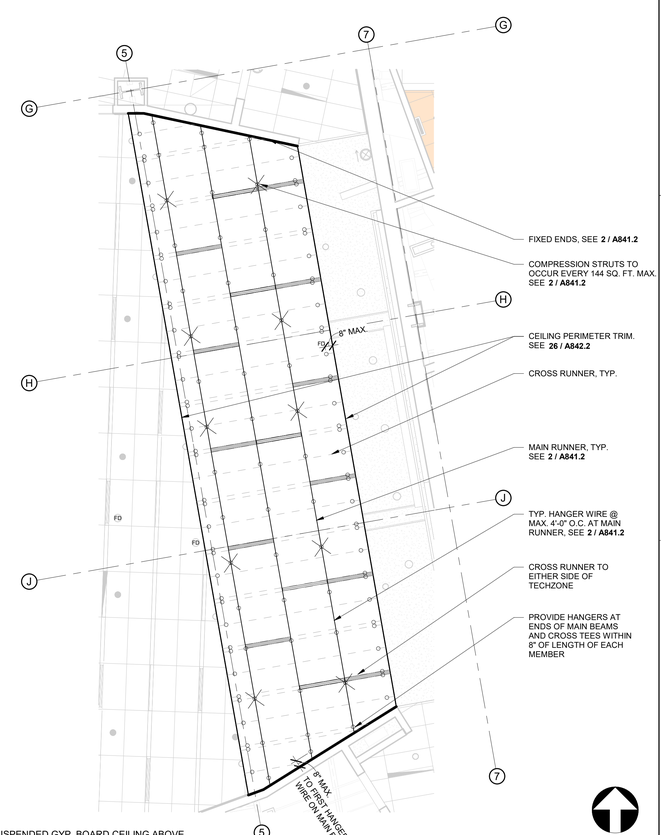

SEE 5 / A845.2 FOR SUSPENDED GYP. BOARD CEILING ABOVE

PROJECT NORTH

LECTURE ROOM 18' - 0" CEILING 3/16" = 1'-0" 5

IDENTIFICATION STAMP
DIV. OF THE STATE ARCHITECT
APP: 02-122821 INC: 2
REVIEWED FOR
SS ☑ FLS ☑ ACS ☑
DATE: 11/20/2025

Teter, Inc. expressly reserves its common law copyright and other property rights in these plans. This document, the ideas and designs incorporated herein, as an instrument of professional service, is not to be used in whole or part, for any other project without prior written authorization.

MARK	DATE	DESCRIPTION
A.	11/13/2025	DSA BACKCHECK

LICENSED ARCHITECT DOUGLAS R. WINOGRAD No. C-23422 STATE OF CALIFORNIA

TETER, INC.
FRESNO HEADQUARTERS
VISALIA | BAKERSFIELD | MODESTO | SAN LUIS OBISPO
ARCHITECTS ENGINEERS CONNECTED

TETER

VISALIA CAMPUS UNIVERSITY CENTER
COLLEGE OF THE SEQUOIAS - INCREMENT 2
915 S. MOONEY BLVD
VISALIA, CALIFORNIA

DRAWING TITLE
CEILING DETAILS

PROJECT NO.
22-12498

DRAWING
A844.2

PLOT DATE: 11/10/2025 9:06:40 AM

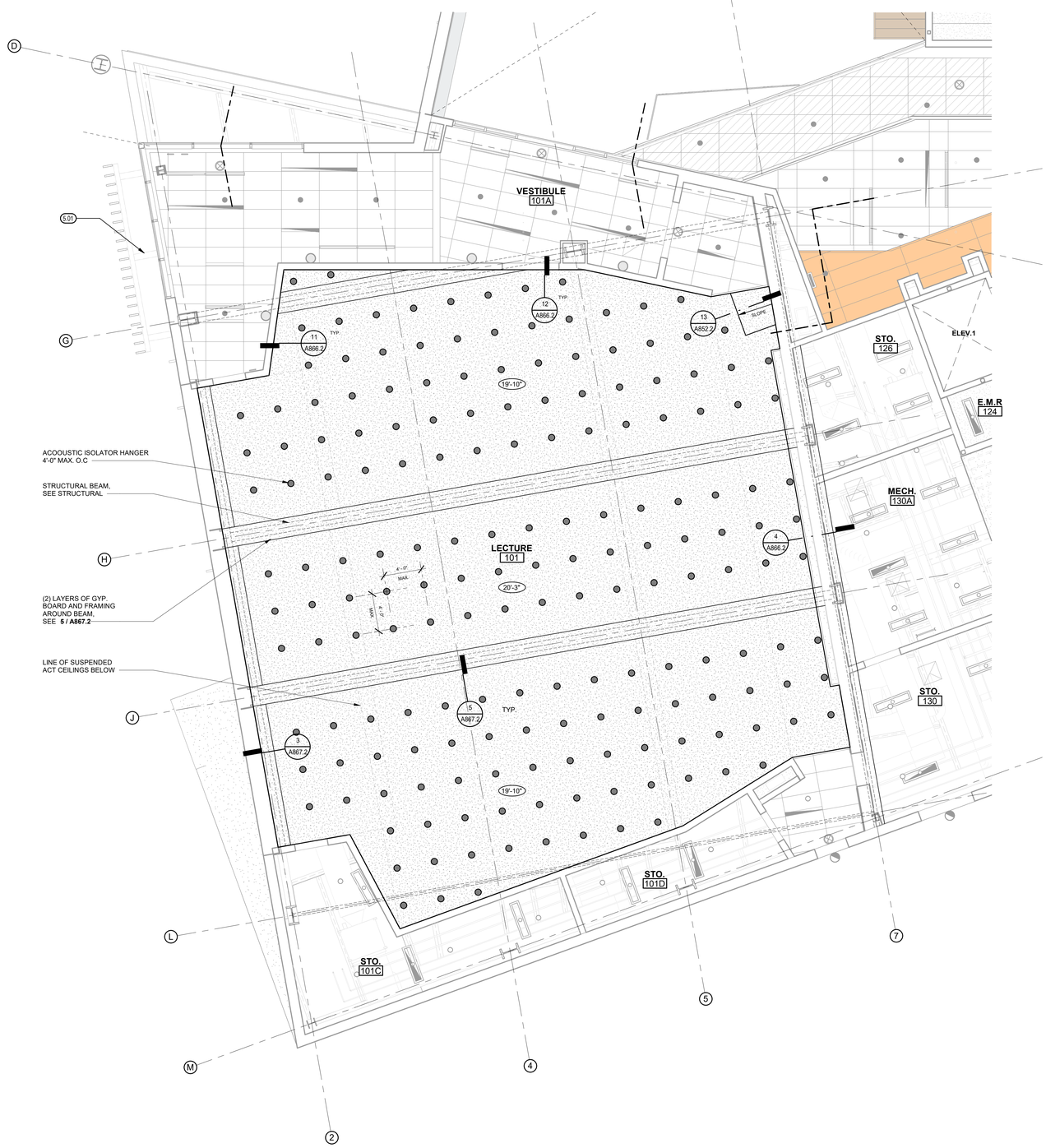

NOTE:

ANY PENETRATION BY MECHANICAL, ELECTRICAL, PLUMBING OR FIRE SERVICES OF ZONE BETWEEN GYP. BOARD SUSPENDED CEILING AND DECK ABOVE REQUIRES SOUND ISOLATION TREATMENT.

PROJECT NORTH

LECTURE ROOM SUSPENDED GYP. BOARD CEILING

3/16" = 1'-0" | 5

IDENTIFICATION STAMP
DIV. OF THE STATE ARCHITECT
APP: 02-122821 INC: 2
REVIEWED FOR
SS ☑ FLS ☑ ACS ☑
DATE: 11/20/2025

Teter, Inc. expressly reserves its common law copyright and other property rights in these plans. This document, the ideas and designs incorporated herein, as an instrument of professional service, is not to be used in whole or in part, for any other project without prior written authorization.

MARK	DATE	DESCRIPTION
A	11/13/2025	DSA BACKCHECK

LICENSED ARCHITECT JONATHAN COUTER C-15991 STATE OF CALIFORNIA

TETER, INC.
FRESNO HEADQUARTERS
VISALIA | BAKERSFIELD | MODESTO | SAN LUIS OBISPO
ARCHITECTS ENGINEERS CONNECTED

VISALIA CAMPUS UNIVERSITY CENTER
COLLEGE OF THE SEQUOIAS - INCREMENT 2
915 S. MOONEY BLVD
VISALIA, CALIFORNIA

DRAWING TITLE
CEILING DETAILS

PROJECT NO.
22-12498

DRAWING
A845.2

\\tetr-file1\Users\tara.chong_TETR\Documents\12498-A-UC_tara.chong.rvt

PLOT DATE: 11/10/2025 9:06:54 AM

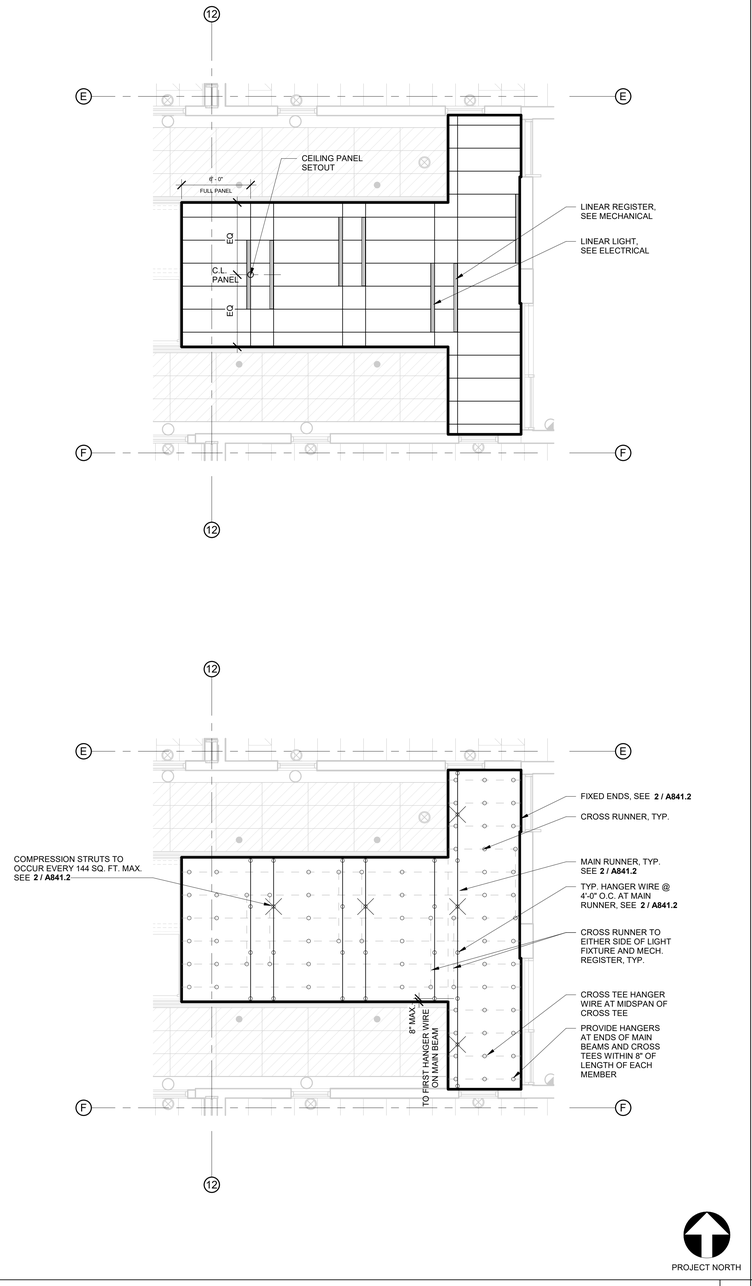

2'-0" X 2'-0" AND 2'-0" AND 8'-0" CEILING LAYOUT PARTIAL PLAN 3/16" = 1'-0" 24

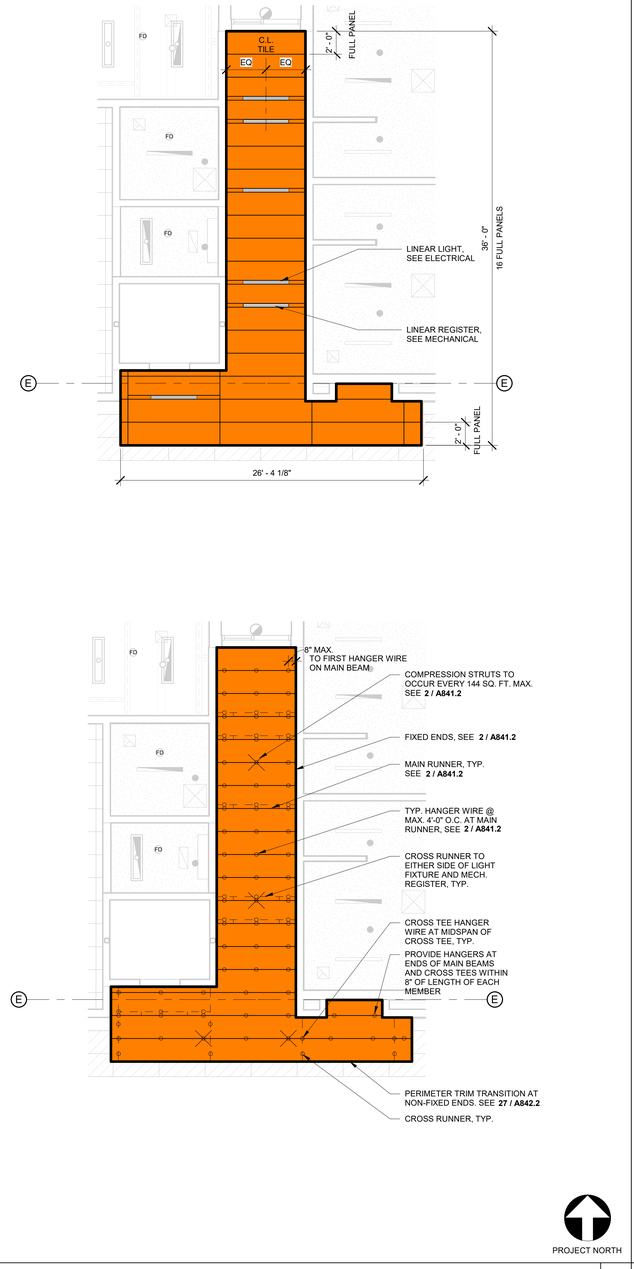

2'-0" X 8'-0" CEILING LAYOUT PARTIAL PLAN 3/16" = 1'-0" 14

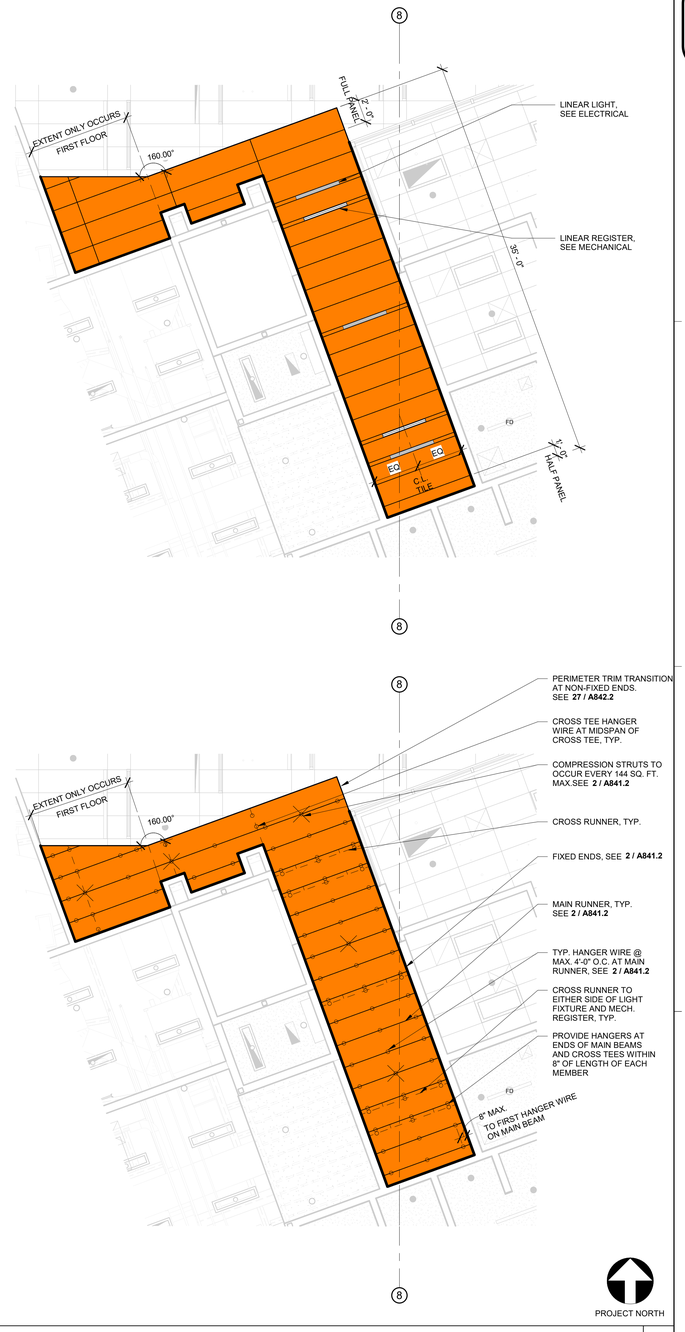

2'-0" X 8'-0" CEILING LAYOUT PARTIAL PLAN 3/16" = 1'-0" 4

IDENTIFICATION STAMP
DIV. OF THE STATE ARCHITECT
APP: 02-122821 INC: 2
REVIEWED FOR
SS ☑ FLS ☑ ACS ☑
DATE: 11/20/2025

Teter, Inc. expressly reserves its common law copyright and other property rights in these plans. This document, the ideas and designs incorporated herein, as an instrument of professional service, is not to be used in whole or in part, for any other project without prior written authorization.

MARK	DATE	DESCRIPTION
A	11/13/2025	DSA BACKCHECK

TETER, INC.
FRESNO HEADQUARTERS
VISALIA | BAKERSFIELD | MODESTO | SAN LUIS OBISPO
ARCHITECTS ENGINEERS CONNECTED

VISALIA CAMPUS UNIVERSITY CENTER
COLLEGE OF THE SEQUOIAS - INCREMENT 2
915 S. MOONEY BLVD
VISALIA, CALIFORNIA

DRAWING TITLE
CEILING DETAILS

PROJECT NO.
22-12498

DRAWING
A846.2

\\tetr-file1\Users\tara.chong_TETR\Documents\12498-A-UC_tara.chong.rvt
PLOT DATE: 11/10/2025 9:07:11 AM

\\tet-file1\Users\tara.chong_TETR\Documents\12498-A-UC_tara.chong.rvt

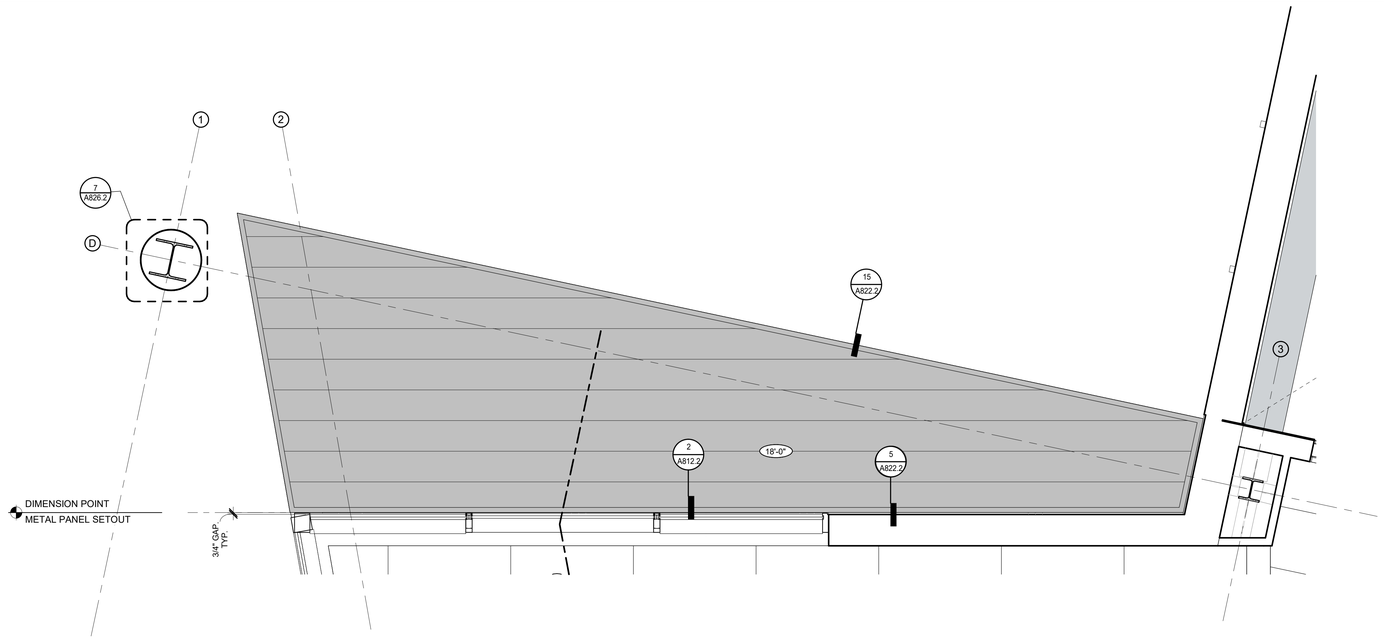

BALCONY SOFFIT - METAL PANEL SETOUT — 1/2" = 1'-0" — 2

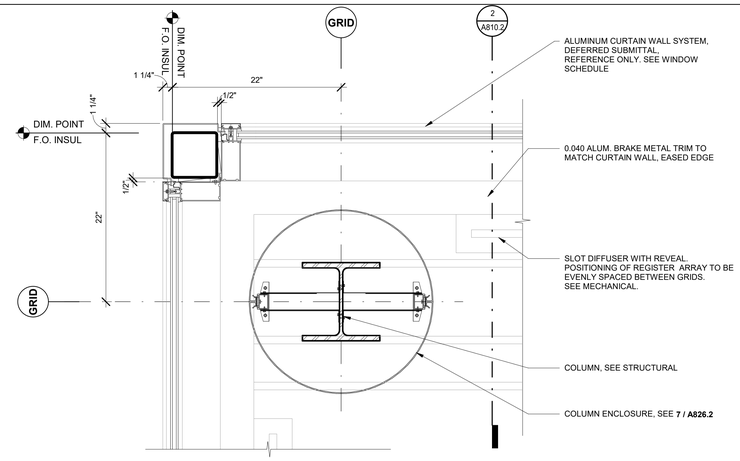

SOFFIT - CURTAIN WALL CORNER — 1 1/2" = 1'-0" — 14

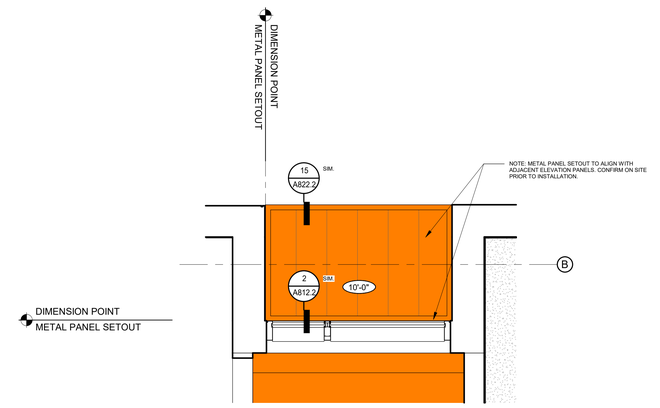

2F SOFFIT - METAL PANEL SETOUT — 1/2" = 1'-0" — 4

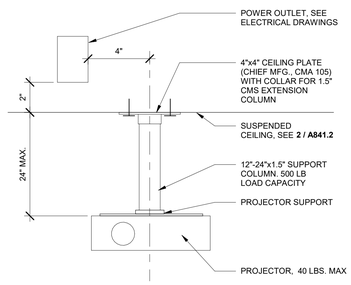

NOTE:
1. PROJECTOR NOT TO EXCEED 40 LBS. AND EXTEND 12" BELOW CEILING.
2. 1/8" AIRCRAFT SAFETY CABLE FROM PROJECTOR TO STRUCTURE ABOVE.
3. PROVIDE 4-WAY WIRE BRACING AT POINT OF PROJECTOR. ALTERNATIVE: PROVIDE 2-WAY BRACING AT 4 CORNERS OF PAN

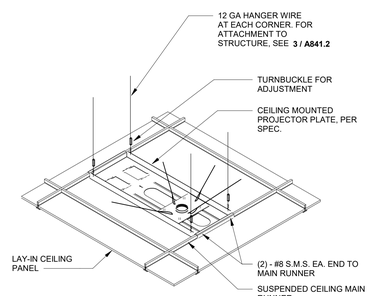

CEILING PROJECTOR MOUNT — 3" = 1'-0" — 15

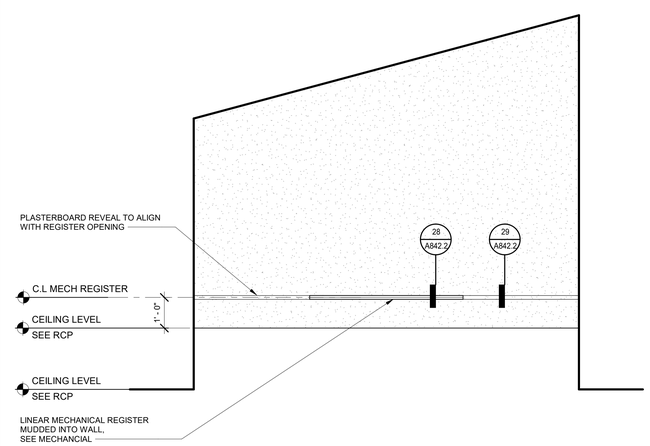

MECHANICAL REGISTER ELEVATION — 1/2" = 1'-0" — 5

IDENTIFICATION STAMP
DIV. OF THE STATE ARCHITECT
APP: 02-122821 INC: 2
REVIEWED FOR
SS ☑ FLS ☑ ACS ☑
DATE: 11/20/2025

Teter, Inc. expressly reserves its common law copyright and other property rights in these plans. This document, the ideas and designs incorporated herein, as an instrument of professional service, is not to be used in whole or part, for any other project without prior written authorization.

MARK	DATE	DESCRIPTION
A.	11/13/2025	DSA BACKCHECK

LICENSED ARCHITECT — JONATHAN CHONG — C-36021 — STATE OF CALIFORNIA

TETER, INC.
ARCHITECTS ENGINEERS CONSULTANTS
FRESNO HEADQUARTERS
VISALIA | BAKERSFIELD | MODESTO | SAN LUIS OBISPO

VISALIA CAMPUS UNIVERSITY CENTER
COLLEGE OF THE SEQUOIAS - INCREMENT 2
915 S. MOONEY BLVD
VISALIA, CALIFORNIA

DRAWING TITLE
CEILING DETAILS

PROJECT NO.
22-12498

DRAWING
A847.2

PLOT DATE: 11/10/2025 9:07:20 AM

\\tet-file1\Users\tara.chong_TETR\Documents\12498-A-UC_tara.chong.rvt

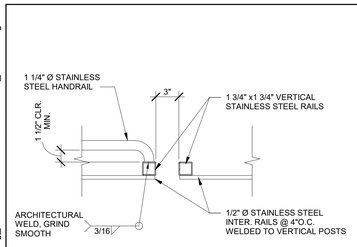

DETAIL A - PLAN VIEW

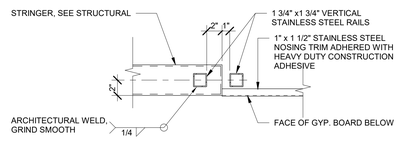

DETAIL B - PLAN VIEW

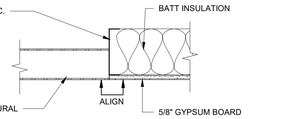

DETAIL C - PLAN VIEW

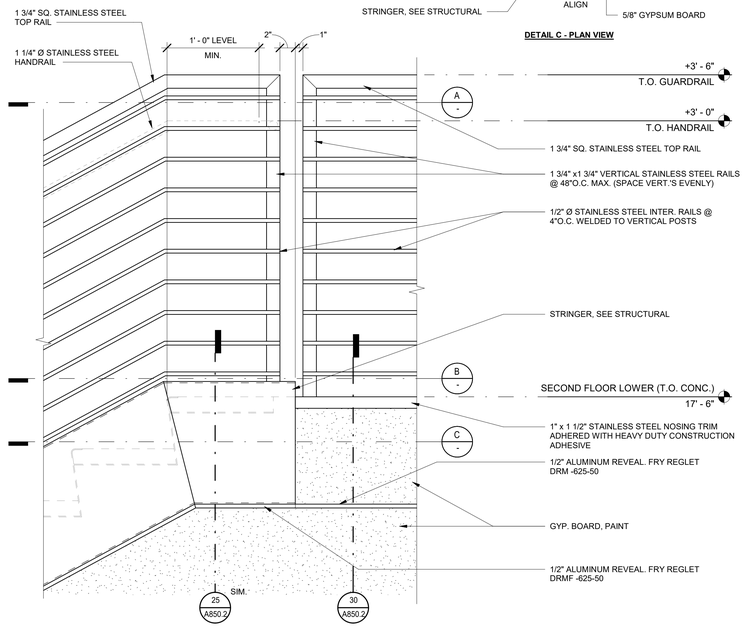

STAIR 1 GUARDRAIL AT TOP LANDING — 1 1/2" = 1'-0" — 23

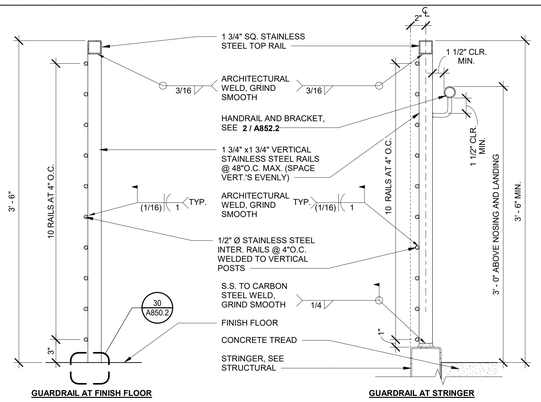

GUARDRAIL AT FINISH FLOOR **GUARDRAIL AT STRINGER**

TYP. GUARDRAIL — 1 1/2" = 1'-0" — 24

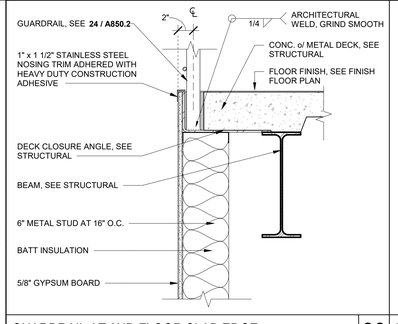

GUARDRAIL AT 2ND FLOOR SLAB EDGE — 1 1/2" = 1'-0" — 30

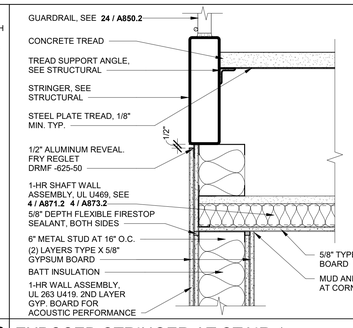

EXPOSED STRINGER AT STAIR 1 — 1 1/2" = 1'-0" — 25

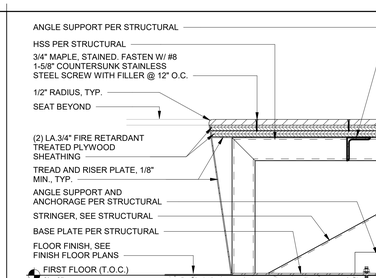

SEATING DETAIL — 1 1/2" = 1'-0" — 11

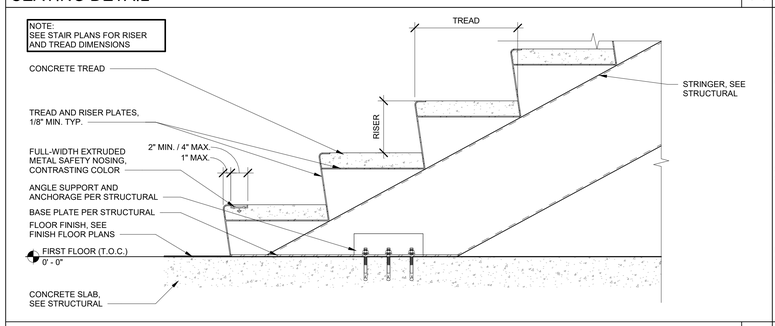

STAIR 1 DETAIL — 1 1/2" = 1'-0" — 12

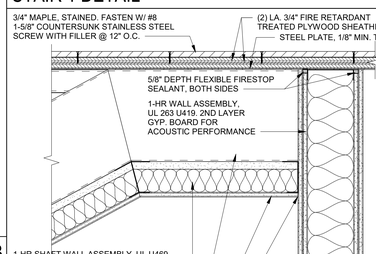

TOP OF WALL AT STAIR LANDING — 1 1/2" = 1'-0" — 18

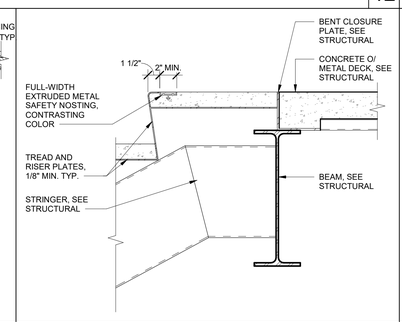

TOP OF STAIR AT METAL DECK — 1 1/2" = 1'-0" — 13

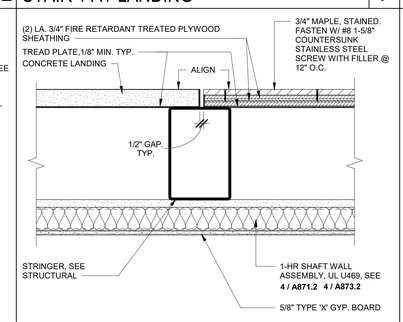

FLOOR TRANSITION AT LANDING — 1 1/2" = 1'-0" — 8

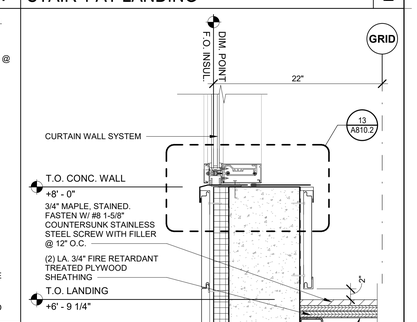

SEATING AT LANDING — 1 1/2" = 1'-0" — 1

SEATING AT LANDING — 1 1/2" = 1'-0" — 6

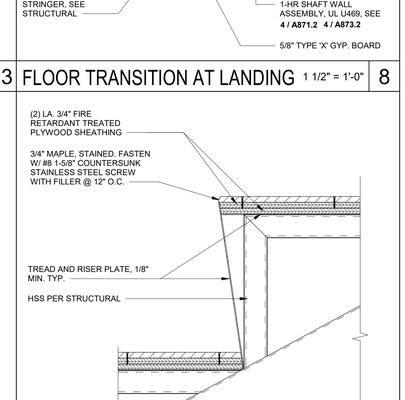

STAIR 1 AT LANDING — 1 1/2" = 1'-0" — 7

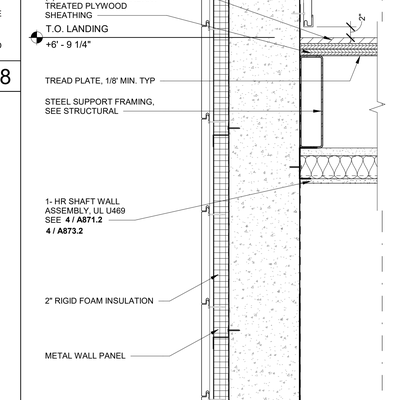

STAIR 1 AT LANDING — 1 1/2" = 1'-0" — 2

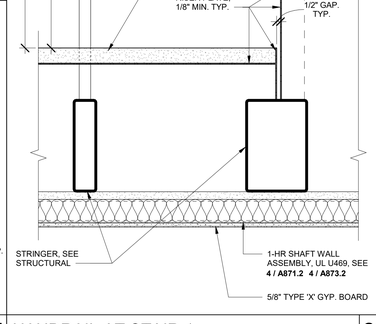

HANDRAIL AT STAIR 1 — 1 1/2" = 1'-0" — 20

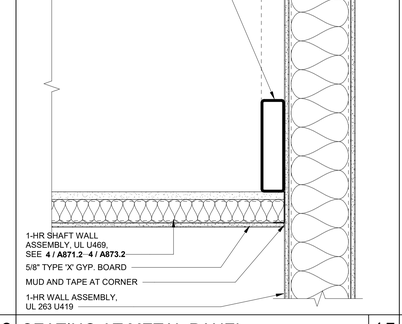

SEATING AT METAL PANEL — 1 1/2" = 1'-0" — 15

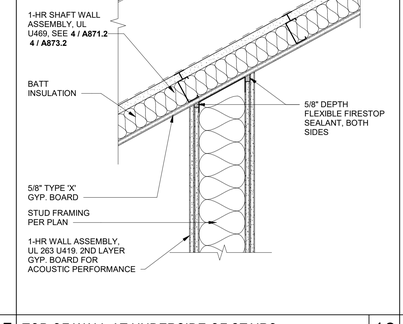

TOP OF WALL AT UNDERSIDE OF STAIRS — 1 1/2" = 1'-0" — 10

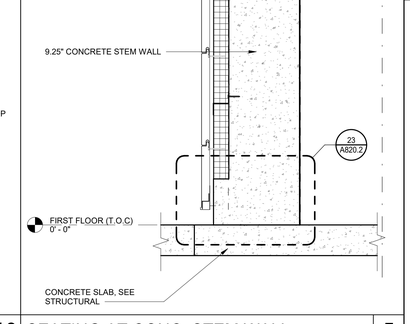

SEATING AT CONC. STEM WALL — 1 1/2" = 1'-0" — 5

IDENTIFICATION STAMP
DIV. OF THE STATE ARCHITECT
APP: 02-122821 INC: 2
REVIEWED FOR
SS ☑ FLS ☑ ACS ☑
DATE: 11/20/2025

Teter, Inc. expressly reserves its common law copyright and other property rights in these plans. This document, the ideas and designs incorporated herein, as an instrument of professional service, is not to be used in whole or part, for any other project without prior written authorization.

MARK	DATE	DESCRIPTION
A	11/13/2025	DSA BACKCHECK

TETER, INC.
FRESNO HEADQUARTERS
VISALIA | BAKERSFIELD | MODESTO | SAN LUIS OBISPO
ARCHITECTS ENGINEERS CONNECTED

VISALIA CAMPUS UNIVERSITY CENTER
COLLEGE OF THE SEQUOIAS - INCREMENT 2
915 S. MOONEY BLVD
VISALIA, CALIFORNIA

DRAWING TITLE
VERTICAL SYSTEM DETAILS

PROJECT NO.
22-12498

DRAWING
A850.2

PLOT DATE: 11/10/2025 9:07:31 AM

\\tet-file1\Users\tara.chong_TETR\Documents\12498-A-UC_tara.chong.rvt

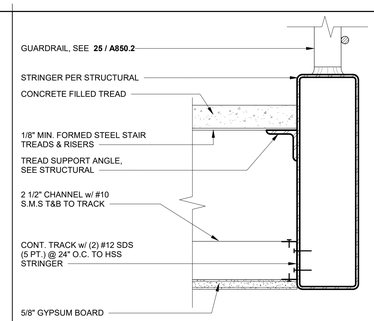

STAIR STRINGER/RAILING 3" = 1'-0" 21

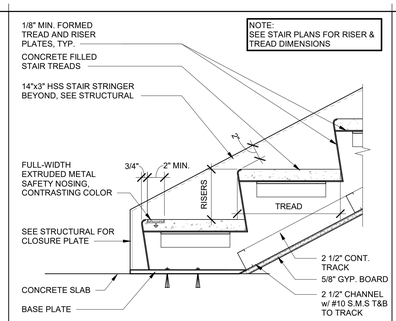

STAIR LANDING 1 1/2" = 1'-0" 16

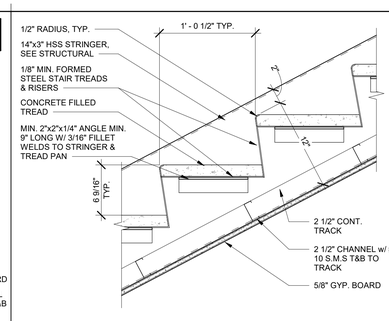

TYP. CONC. FILLED METAL PAN TREAD 1 1/2" = 1'-0" 11

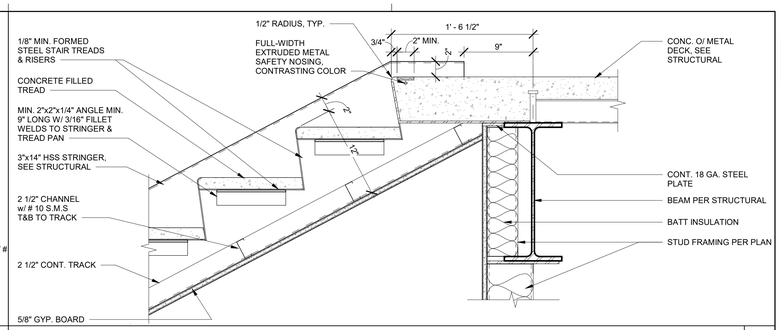

TOP OF STAIR LANDING 1 1/2" = 1'-0" 1

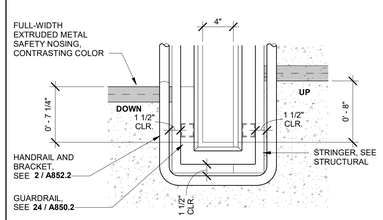

PLAN VIEW

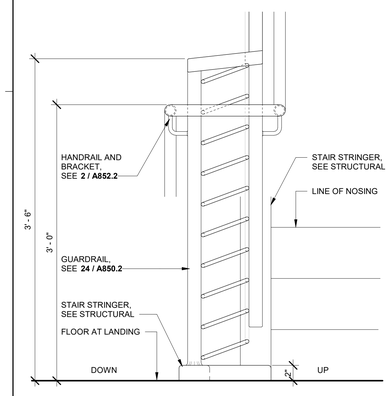

STAIR HANDRAIL ELEVATION 1 1/2" = 1'-0" 28

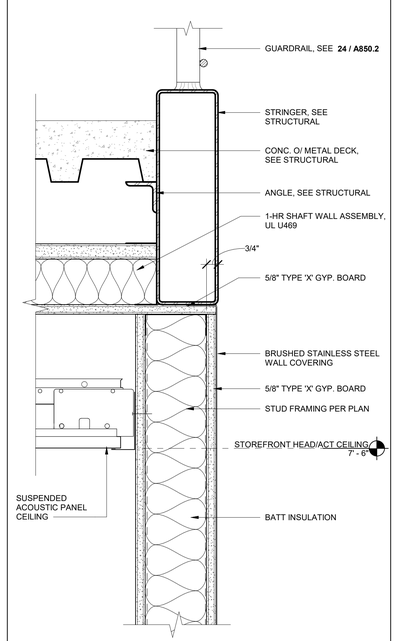

WALL AT STRINGER 3" = 1'-0" 23

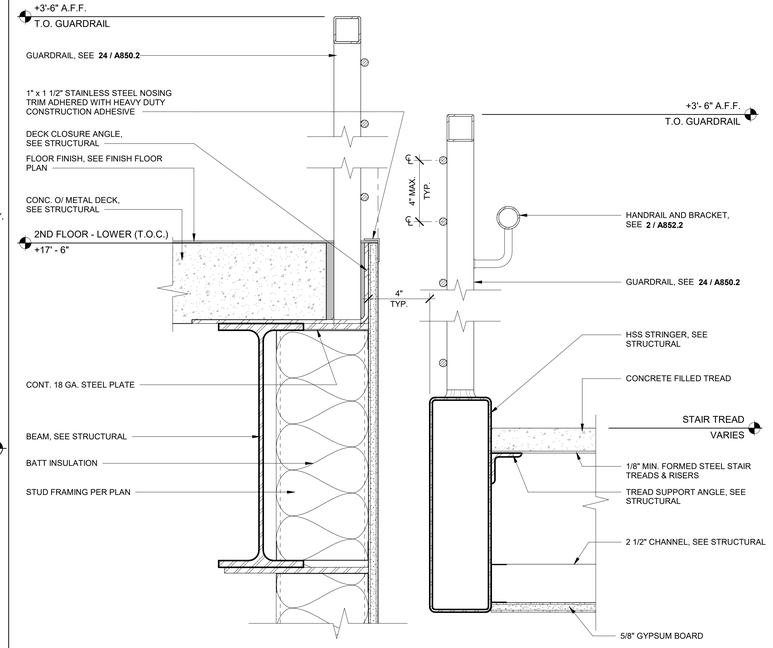

GUARDRAIL AT 2ND FLOOR SLAB EDGE AND STAIR 2 & 3 3" = 1'-0" 13

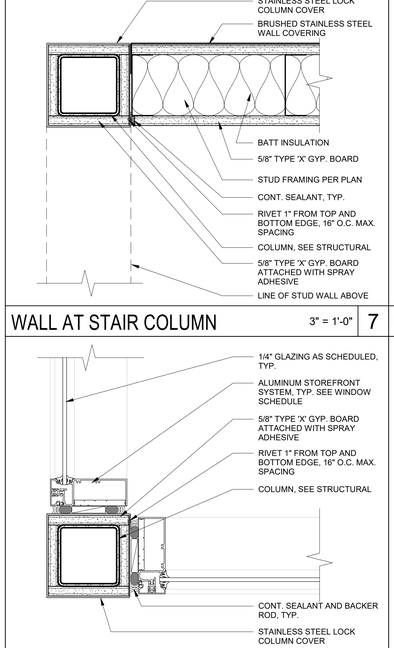

WALL AT STAIR COLUMN 3" = 1'-0" 7

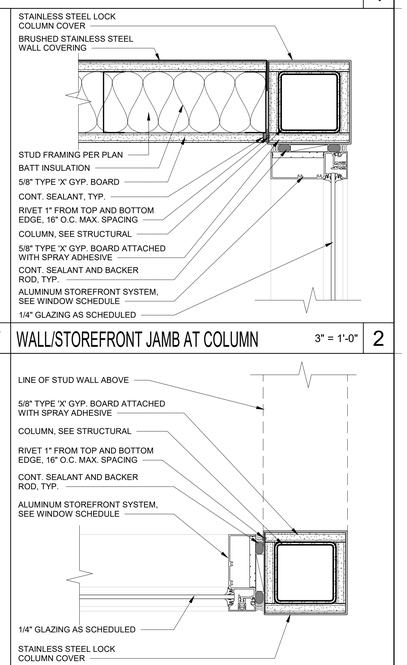

WALL/STOREFRONT JAMB AT COLUMN 3" = 1'-0" 2

STOREFRONT JAMB AT COLUMN 3" = 1'-0" 8

STOREFRONT JAMB/OPENING AT COLUMN 3" = 1'-0" 3

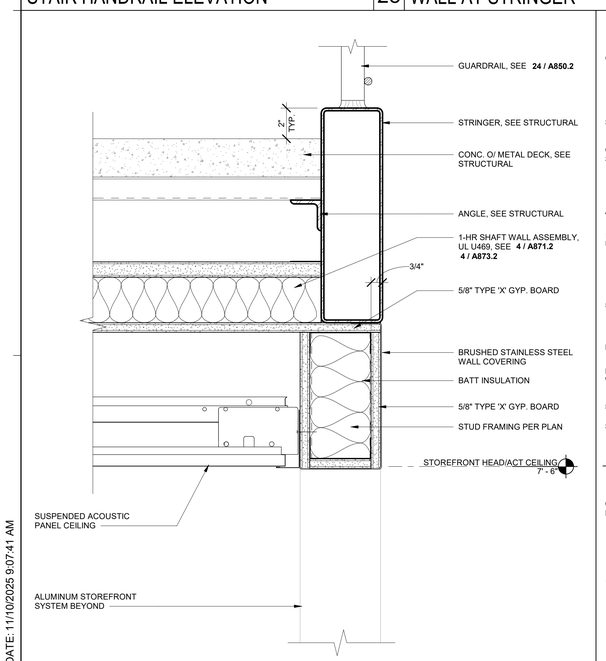

OPENING AT MEETING ROOM 3" = 1'-0" 25

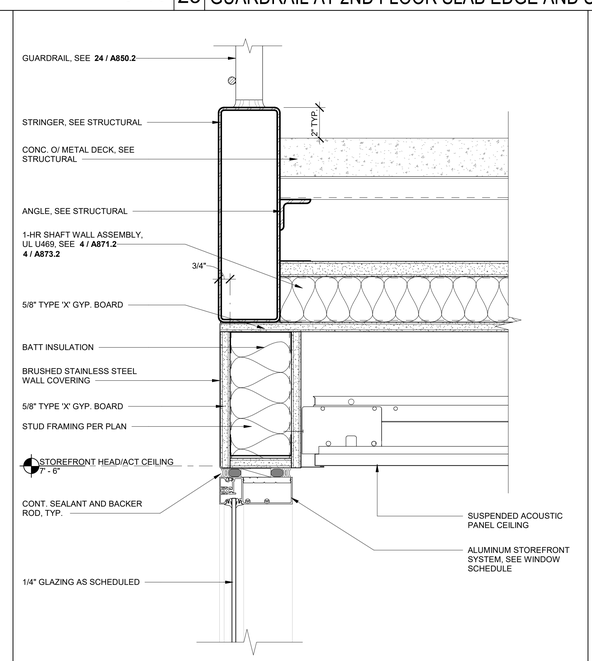

INT. STOREFRONT HEADT AT STRINGER 3" = 1'-0" 20

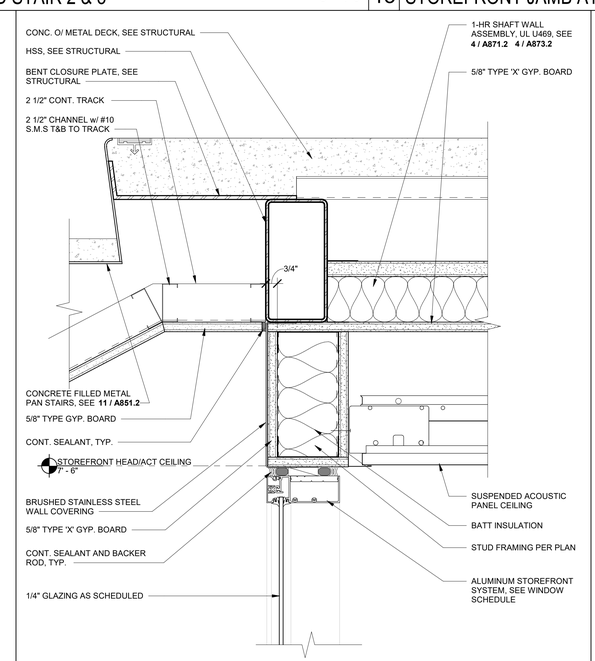

INT. STOREFRONT HEAD AT STAIR LANDING 3" = 1'-0" 10

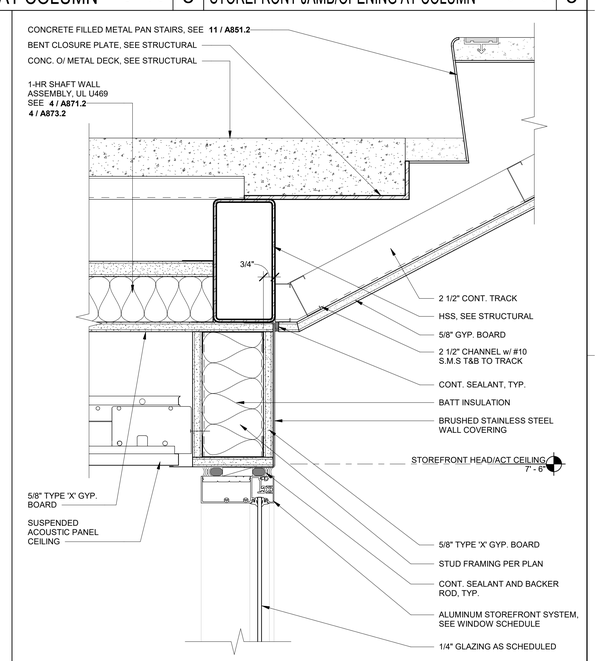

INT. STOREFRONT HEAD AT STAIR LANDING 3" = 1'-0" 5

IDENTIFICATION STAMP
DIV. OF THE STATE ARCHITECT
APP: 02-122821 INC: 2
REVIEWED FOR
SS ☑ FLS ☑ ACS ☑
DATE: 11/20/2025

Teter, Inc. expressly reserves its common law copyright and other property rights in these plans. This document, the ideas and designs incorporated herein, as an instrument of professional service, is not to be used in whole or in part, for any other project without prior written authorization.

MARK	DATE	DESCRIPTION
A	11/13/2025	DSA BACKCHECK

TETER, INC.
ARCHITECTS ENGINEERS CONNECTED
FRESNO HEADQUARTERS
VISALIA | BAKERSFIELD | MODESTO | SAN LUIS OBISPO

VISALIA CAMPUS UNIVERSITY CENTER
COLLEGE OF THE SEQUOIAS - INCREMENT 2
915 S. MOONEY BLVD
VISALIA, CALIFORNIA

DRAWING TITLE
VERTICAL SYSTEM DETAILS

PROJECT NO.
22-12498

DRAWING
A851.2

PLOT DATE: 11/10/2025 9:07:41 AM

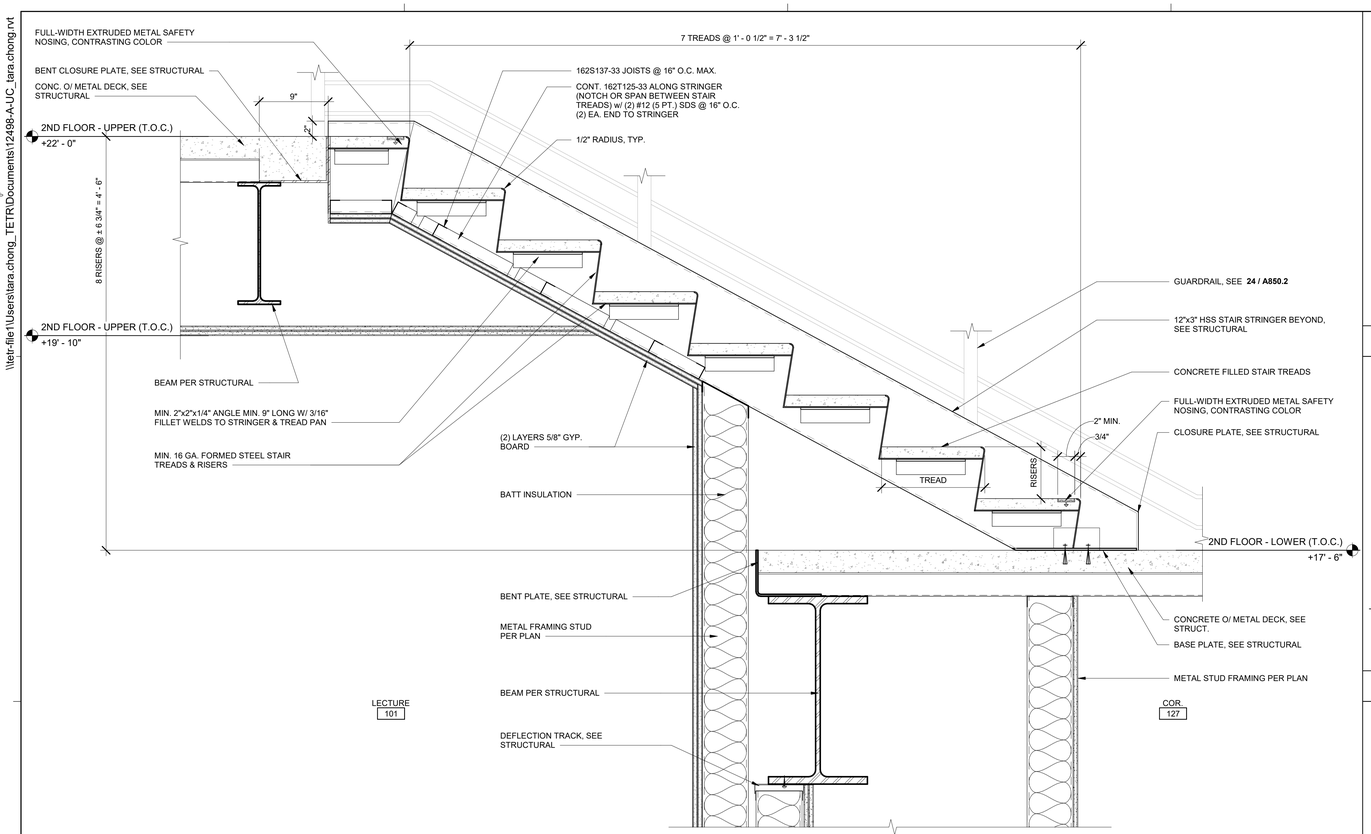

STAIR 5 SECTION — 1 1/2" = 1'-0" — 13

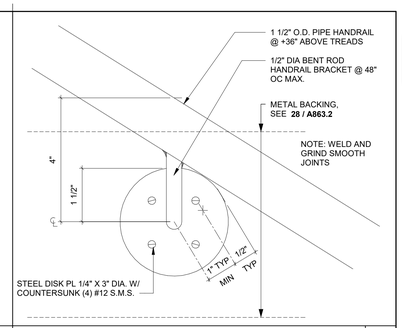

HANDRAIL BRACKET AT WALL — 6" = 1'-0" — 1

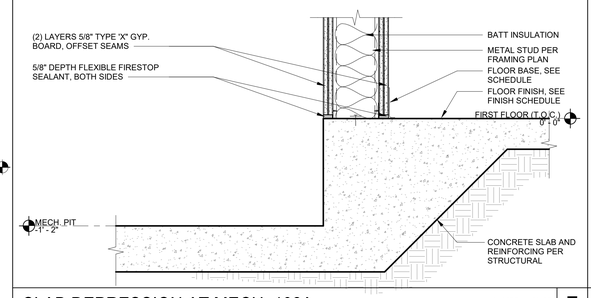

SLAB DEPRESSION AT MECH. 102A — 1 1/2" = 1'-0" — 7

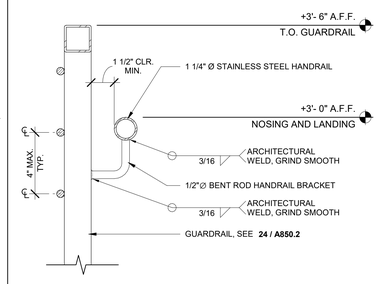

HANDRAIL BRACKET AT STAIR — 3" = 1'-0" — 2

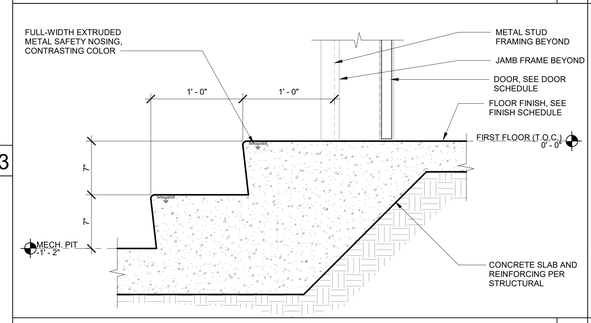

CONC. STAIRS AT MECH.102A — 1 1/2" = 1'-0" — 8

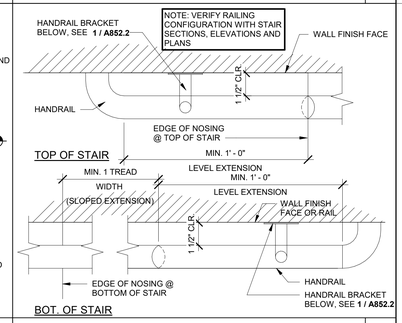

RAILING HANDRAIL RETURN — 3" = 1'-0" — 3

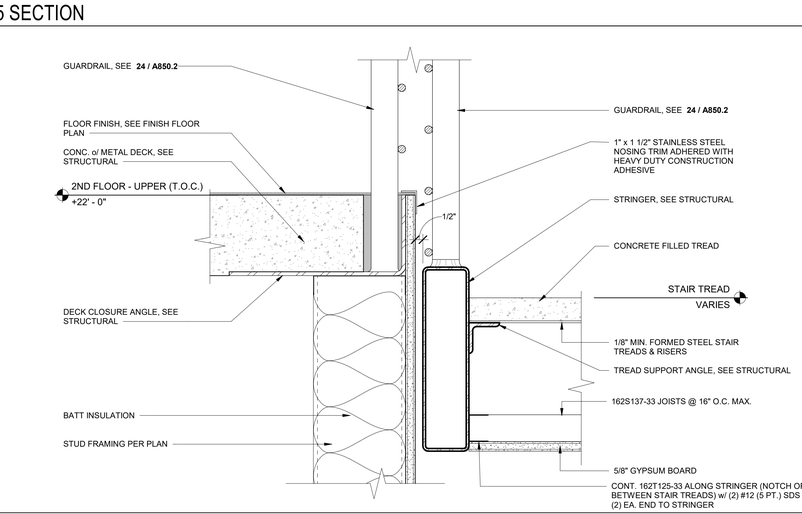

STAIR 5 STRINGER AT GUARDRAIL — 3" = 1'-0" — 19

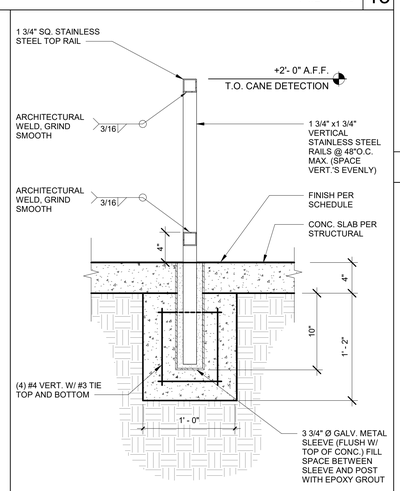

CANE DETECTION RAIL — 1 1/2" = 1'-0" — 14

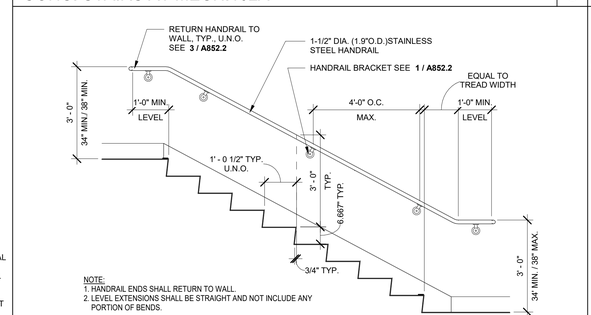

WALL MOUNTED HANDRAIL — 1/2" = 1'-0" — 9

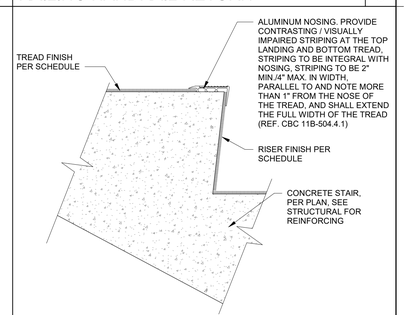

TYP. CONCRETE STAIR NOSING — 3" = 1'-0" — 4

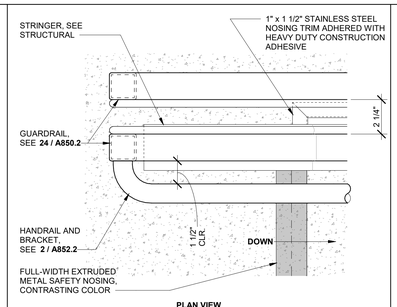

HANDRAIL RETURN AT STAIR 5 — 3" = 1'-0" — 25

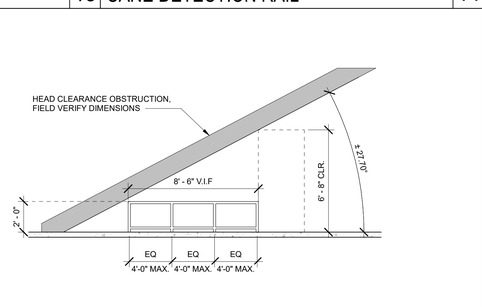

CANE DETECTION DIAGRAM — 1/4" = 1'-0" — 15

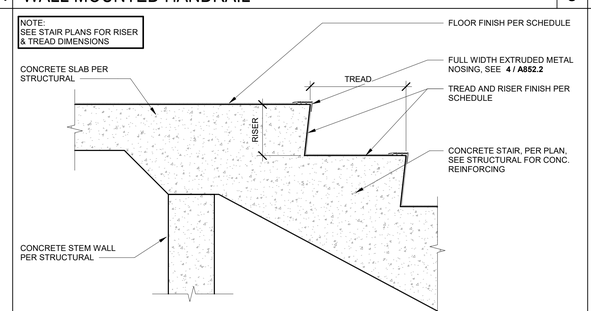

TOP OF STAIR - STAIR 4 — 1 1/2" = 1'-0" — 10

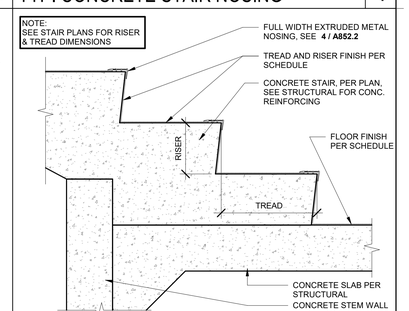

BOTTOM OF STAIR - STAIR 4 — 1 1/2" = 1'-0" — 5

\\tet-file1\Users\tara.chong_TETR\Documents\12498-A-UC_tara.chong.rvt

PLOT DATE: 11/10/2025 9:07:53 AM

IDENTIFICATION STAMP
DIV. OF THE STATE ARCHITECT
APP: 02-122821 INC: 2
REVIEWED FOR
SS ☑ FLS ☑ ACS ☑
DATE: 11/20/2025

Teter, Inc. expressly reserves its common law copyright and other property rights in these plans. This document, the ideas and designs incorporated herein, as an instrument of professional service, is not to be used in whole or part, for any other project without prior written authorization.

MARK	DATE	DESCRIPTION
A	11/13/2025	DSA BACKCHECK

LICENSED ARCHITECT — STATE OF CALIFORNIA — CHRISTOPHER J. TETER — C-23977 — RENEWAL 08/31/2027

TETER, INC.
FRESNO HEADQUARTERS
VISALIA | BAKERSFIELD | MODESTO | SAN LUIS OBISPO
ARCHITECTS ENGINEERS CONNECTED

TETER

VISALIA CAMPUS UNIVERSITY CENTER
COLLEGE OF THE SEQUOIAS - INCREMENT 2
915 S. MOONEY BLVD
VISALIA, CALIFORNIA

DRAWING TITLE
VERTICAL SYSTEM DETAILS

PROJECT NO.
22-12498

DRAWING
A852.2

\\tet-file1\Users\tara.chong_TETR\Documents\12498-A-UC_tara.chong.rvt

IDENTIFICATION STAMP
DIV. OF THE STATE ARCHITECT
APP: 02-122821 INC: 2
REVIEWED FOR
SS ☑ FLS ☑ ACS ☑
DATE: 11/20/2025

Teter, Inc. expressly reserves its common law copyright and other property rights in these plans. This document, the ideas and designs incorporated herein, as an instrument of professional service, is not to be used in whole or part, for any other project without prior written authorization.

MARK	DATE	DESCRIPTION
A.	11/13/2025	DSA BACKCHECK

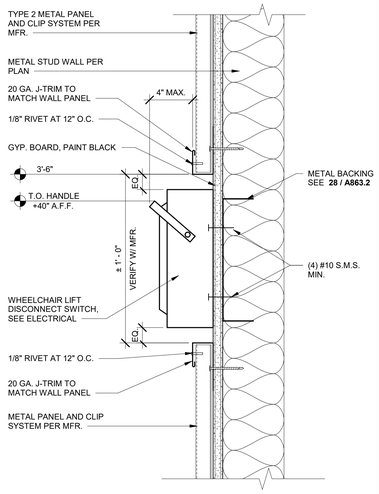

LIFT DISCONNECT - SECTION 3" = 1'-0" 17

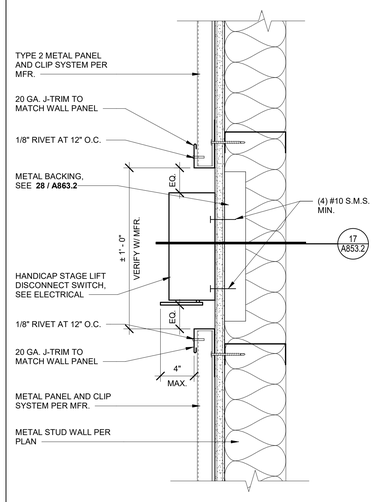

LIFT DISCONNECT - PLAN 3" = 1'-0" 12

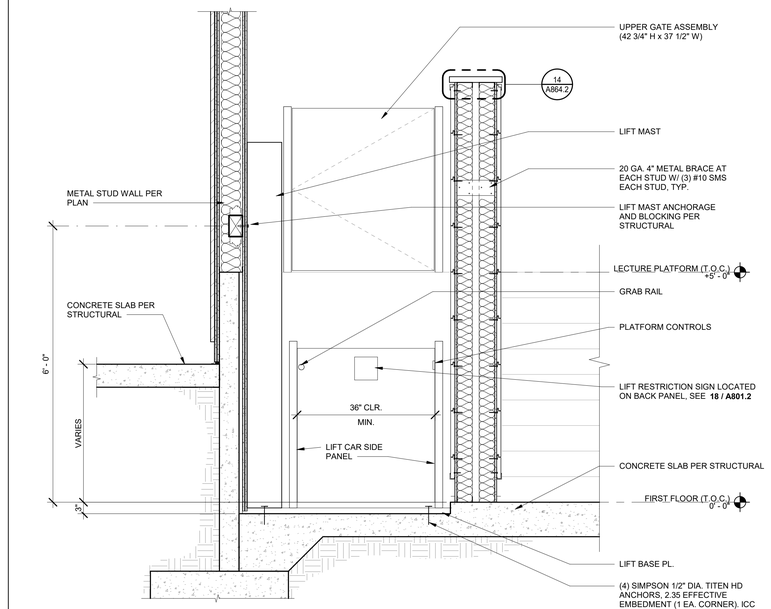

LIFT ANCHORAGE SECTION 3/4" = 1'-0" 2

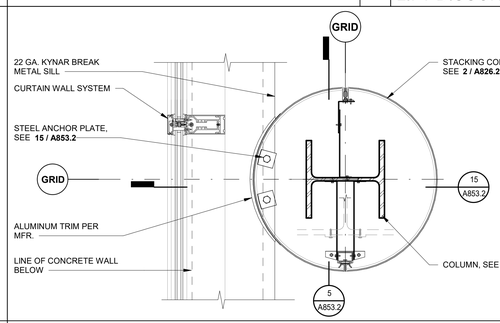

COLUMN ENCLOSURE AT CURTAIN WALL SILL 1 1/2" = 1'-0" 18

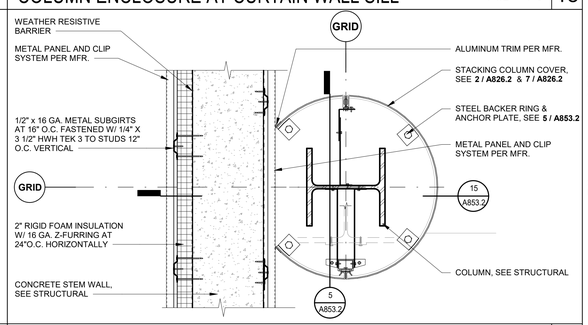

COLUMN ENCLOSURE AT CONC. WALL 1 1/2" = 1'-0" 19

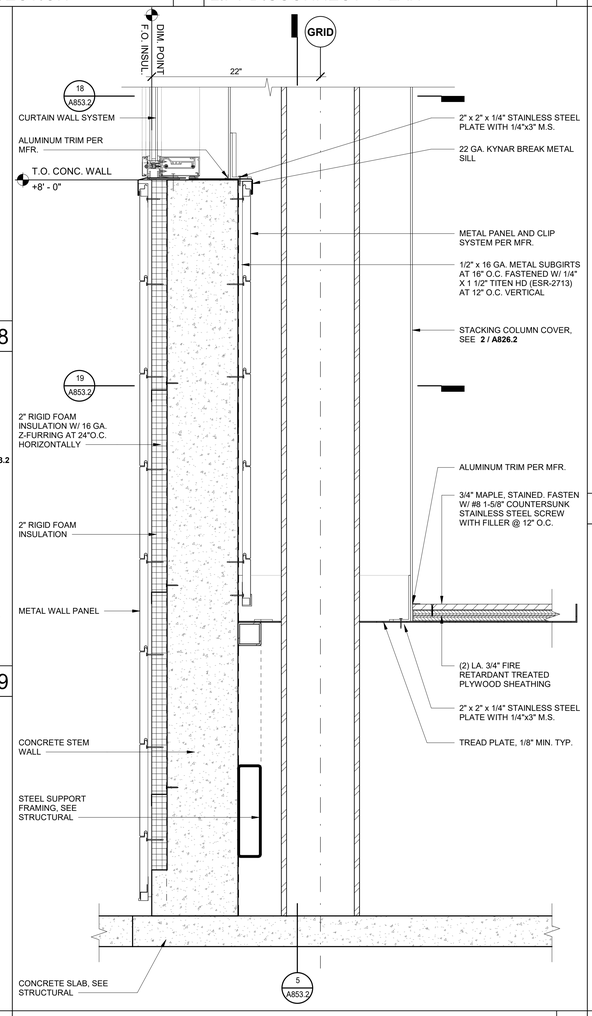

COLUMN ENCLOSURE AT BLEACHER SEATING SECTION 1 1/2" = 1'-0" 15

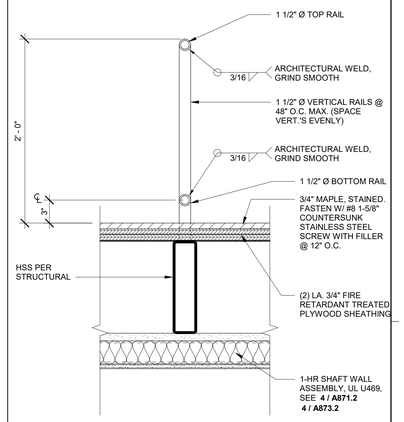

GUARD AT BLEACHER SEATING 1 1/2" = 1'-0" 4

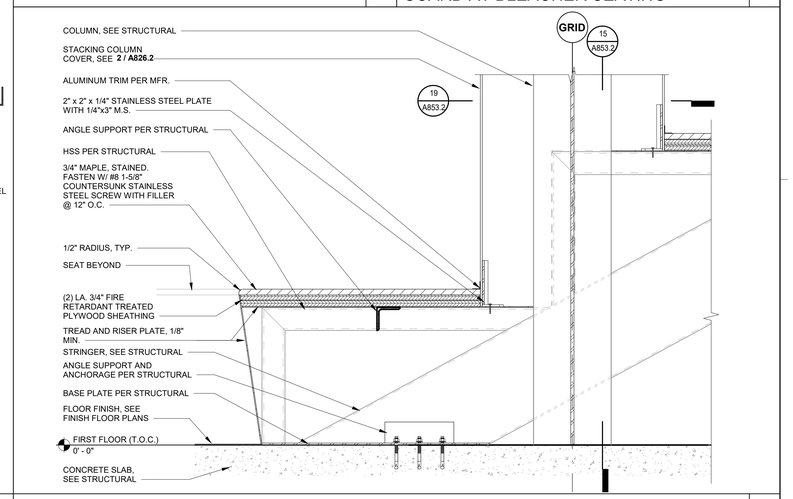

COLUMN ENCLOSURE AT BLEACHER SEATING 1 1/2" = 1'-0" 5

TETER, INC.
ARCHITECTS ENGINEERS CONNECTED
FRESNO HEADQUARTERS
VISALIA | BAKERSFIELD | MODESTO | SAN LUIS OBISPO

VISALIA CAMPUS UNIVERSITY CENTER
COLLEGE OF THE SEQUOIAS - INCREMENT 2
915 S. MOONEY BLVD
VISALIA, CALIFORNIA

DRAWING TITLE
VERTICAL SYSTEM DETAILS

PROJECT NO.
22-12498

DRAWING
A853.2

PLOT DATE: 11/10/2025 9:08:00 AM

\\tet-file1\Users\tara.chong_TETR\Documents\12498-A-UC_tara.chong.rvt

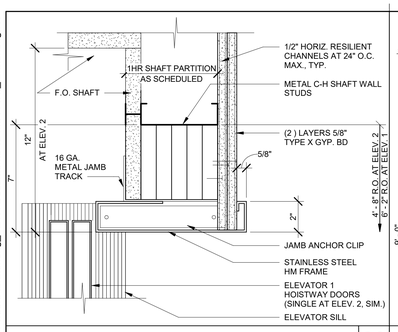

ELEVATOR JAMB 3" = 1'-0" 26

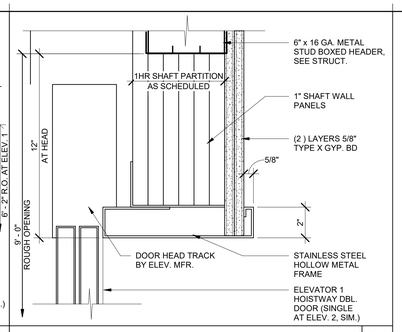

ELEVATOR HEAD 3" = 1'-0" 21

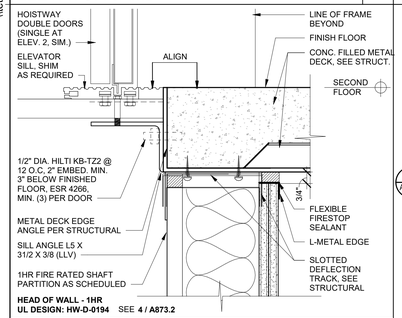

ELEVATOR SILL AT UPPER FLOORS 3" = 1'-0" 27

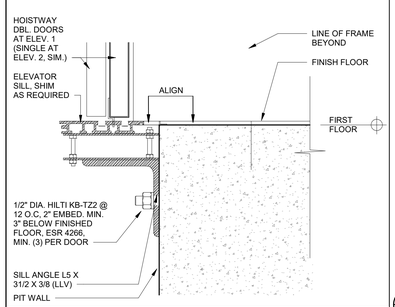

ELEVATOR SILL AT FIRST FLOOR 3" = 1'-0" 28

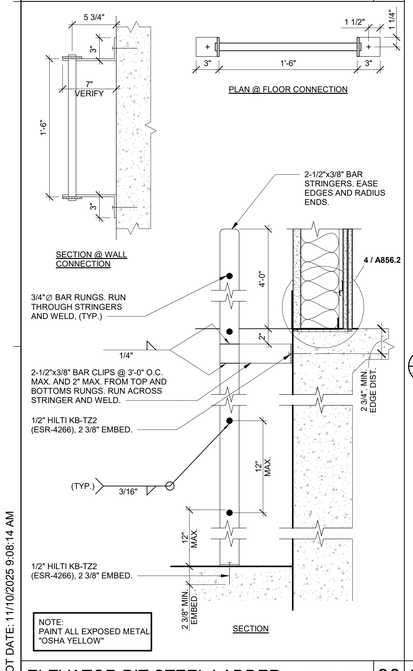

ELEVATOR PIT STEEL LADDER 1 1/2" = 1'-0" 30

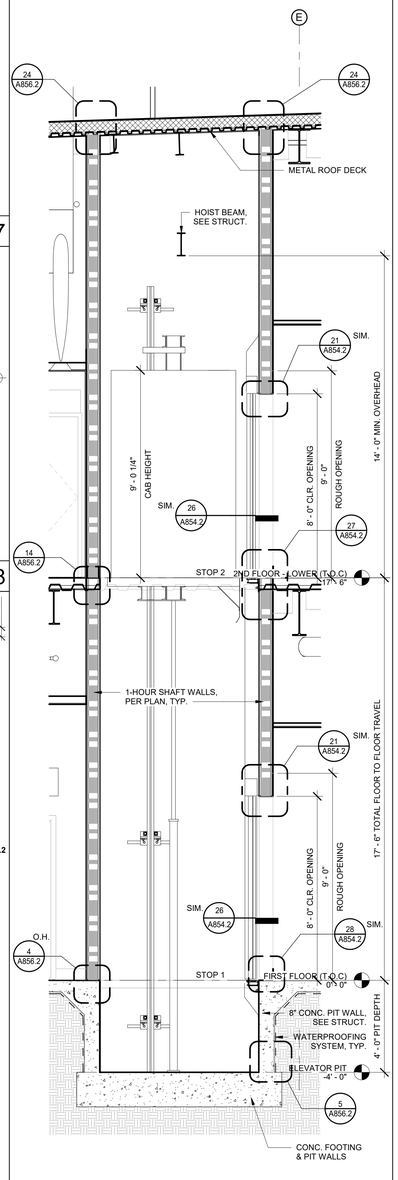

ELEV. 2 SECTION 3/8" = 1'-0" 25

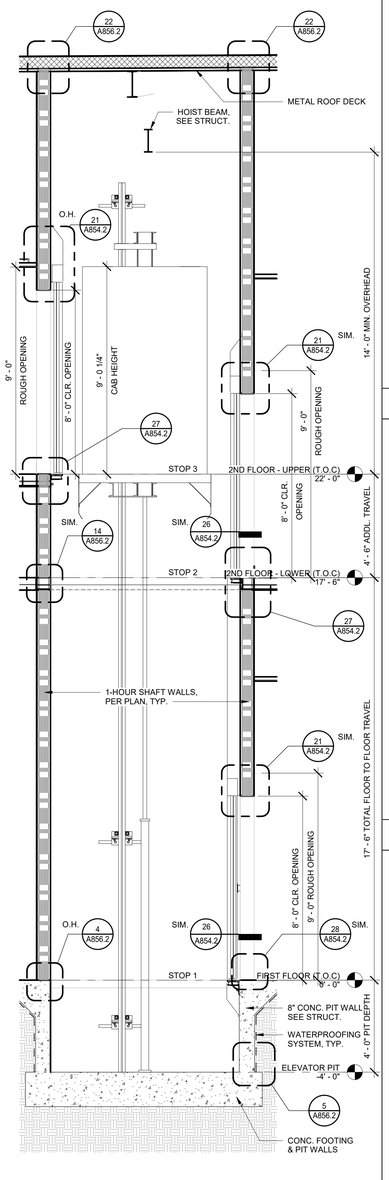

ELEV. 1 SECTION 3/8" = 1'-0" 20

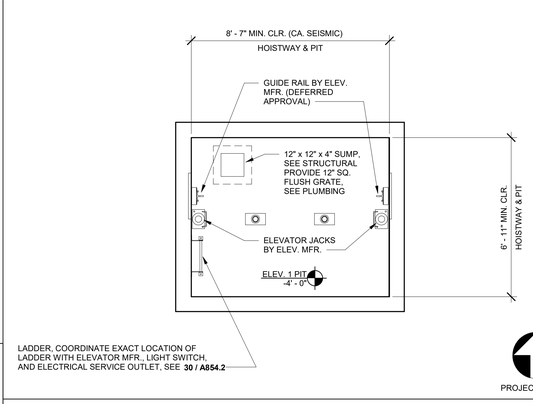

ELEV. 2 PIT PLAN 3/8" = 1'-0" 7

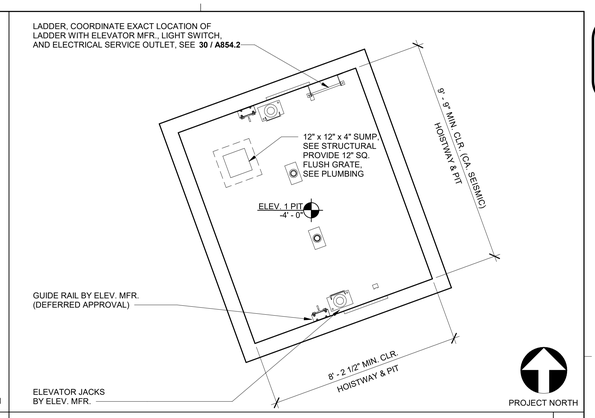

ELEV. 1 PIT PLAN 3/8" = 1'-0" 2

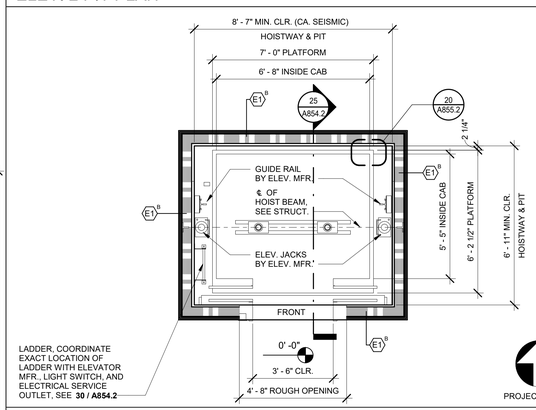

ELEV. 2 HOISTWAY / CAB PLAN 3/8" = 1'-0" 8

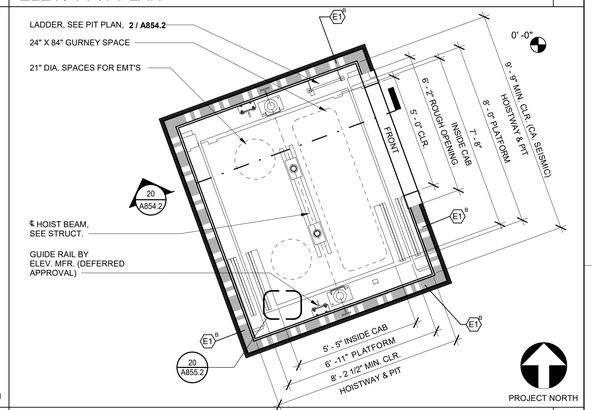

ELEV. 1 HOISTWAY / CAB PLAN 3/8" = 1'-0" 3

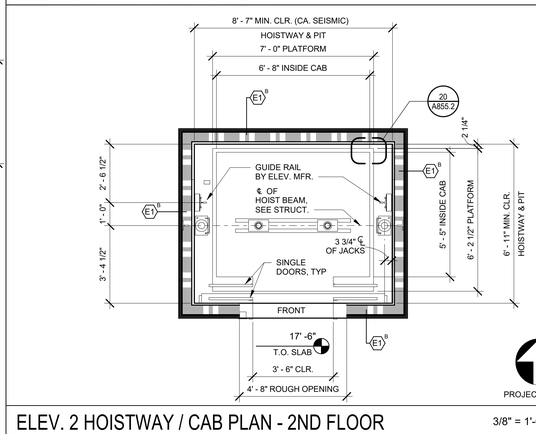

ELEV. 2 HOISTWAY / CAB PLAN - 2ND FLOOR 3/8" = 1'-0" 9

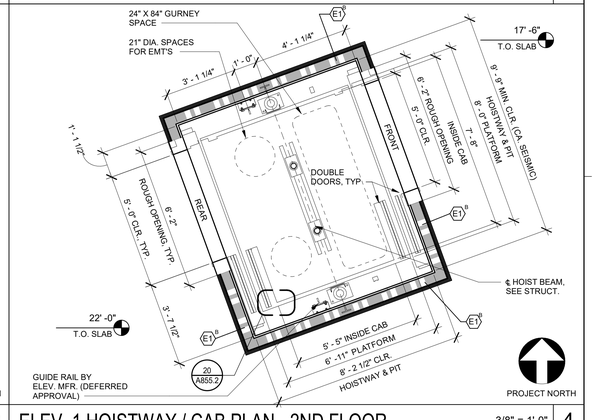

ELEV. 1 HOISTWAY / CAB PLAN - 2ND FLOOR 3/8" = 1'-0" 4

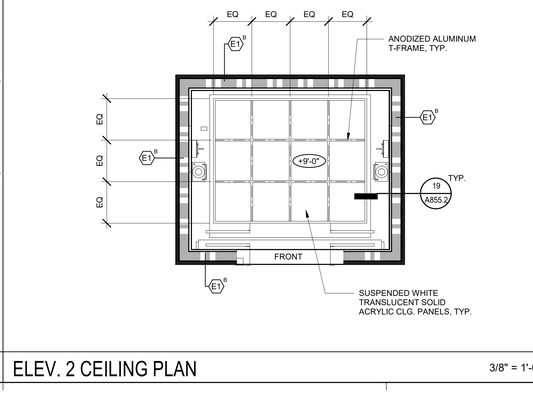

ELEV. 2 CEILING PLAN 3/8" = 1'-0" 10

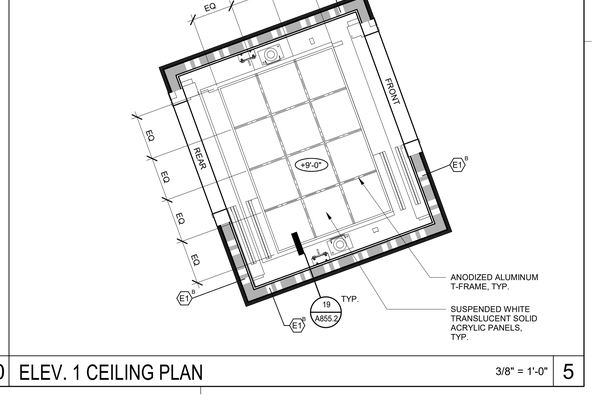

ELEV. 1 CEILING PLAN 3/8" = 1'-0" 5

IDENTIFICATION STAMP
DIV. OF THE STATE ARCHITECT
APP: 02-122821 INC: 2
REVIEWED FOR
SS ☑ FLS ☑ ACS ☑
DATE: 11/20/2025

Teter, Inc. expressly reserves its common law copyright and other property rights in these plans. This document, the ideas and designs incorporated herein, as an instrument of professional service, is not to be used in whole or in part, for any other project without prior written authorization.

MARK	DATE	DESCRIPTION
A.	11/13/2025	DSA BACKCHECK

TETER, INC.
ARCHITECTS ENGINEERS CONNECTED
FRESNO HEADQUARTERS
VISALIA | BAKERSFIELD | MODESTO | SAN LUIS OBISPO

VISALIA CAMPUS UNIVERSITY CENTER
COLLEGE OF THE SEQUOIAS - INCREMENT 2
915 S. MOONEY BLVD
VISALIA, CALIFORNIA

DRAWING TITLE
VERTICAL SYSTEM DETAILS

PROJECT NO.
22-12498

DRAWING
A854.2

PLOT DATE: 11/10/2025 9:08:14 AM

\\tet-file1\Users\tara.chong_TETR\Documents\12498-A-UC_tara.chong.rvt

IDENTIFICATION STAMP
DIV. OF THE STATE ARCHITECT
APP: 02-122821 INC: 2
REVIEWED FOR
SS ☑ FLS ☑ ACS ☑
DATE: 11/20/2025

Teter, Inc. expressly reserves its common law copyright and other property rights in these plans. This document, the ideas and designs incorporated herein, as an instrument of professional service, is not to be used in whole or part, for any other project without prior written authorization.

MARK	DATE	DESCRIPTION
A.	11/13/2025	DSA BACKCHECK

NOTE: SUPPORT HANDRAIL SHALL BE ABLE TO SUPPORT A VERTICAL OR HORIZONTAL FORCE OF 250 POUNDS APPLIED AT ANY POINT ON THE SUPPORT RAIL, FASTENER, MOUNTING DEVICE, OR SUPPORTING STRUCTURE

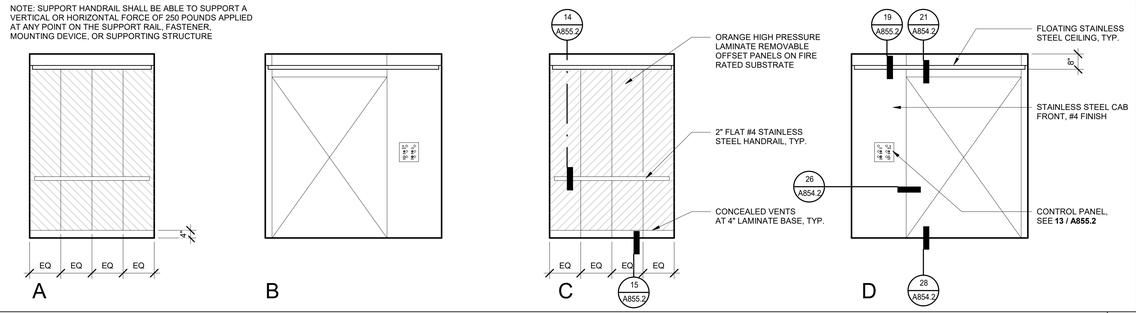

ELEVATOR 1 CAB INTERIOR ELEVATIONS — 3/8" = 1'-0" — 1

NOTE: SUPPORT HANDRAIL SHALL BE ABLE TO SUPPORT A VERTICAL OR HORIZONTAL FORCE OF 250 POUNDS APPLIED AT ANY POINT ON THE SUPPORT RAIL, FASTENER, MOUNTING DEVICE, OR SUPPORTING STRUCTURE

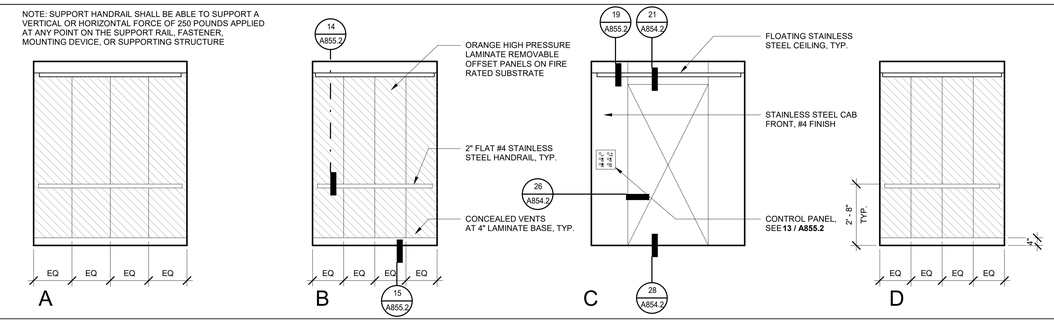

ELEVATOR 2 CAB INTERIOR ELEVATIONS — 3/8" = 1'-0" — 2

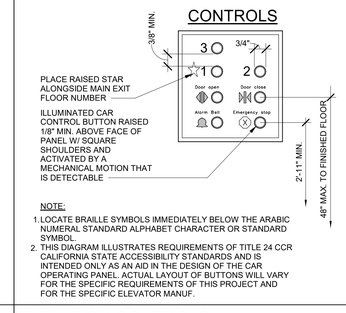

ELEVATOR CONTROLS — N.T.S. — 13

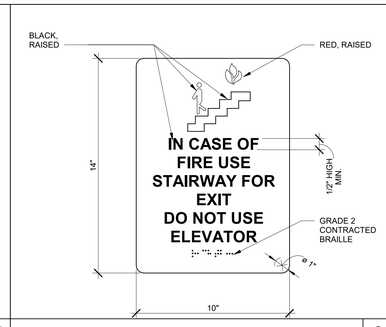

EMERGENCY SIGNAGE — 3" = 1'-0" — 8

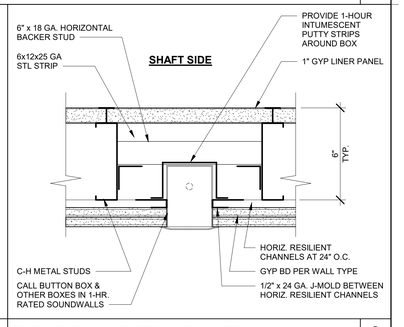

ELEVATOR CALL BUTTON AT SHAFT WALL — 3" = 1'-0" — 3

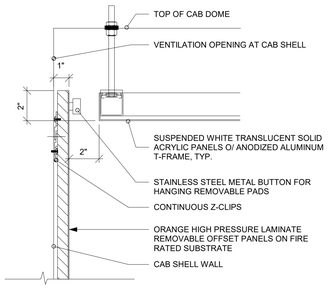

ELEVATOR CAB CEILING — 3" = 1'-0" — 19

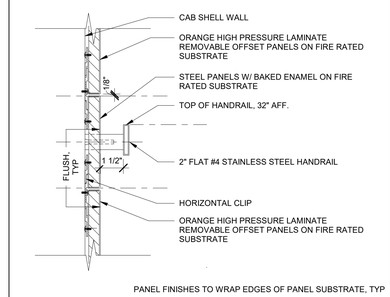

PANEL FINISHES TO WRAP EDGES OF PANEL SUBSTRATE, TYP

ELEVATOR CAB RAIL — 3" = 1'-0" — 14

INTERNATIONAL SYMBOL (STAR OF LIFE) FOR EMERGENCY MEDICAL SERVICES

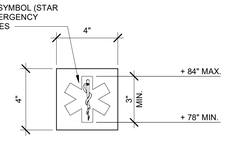

STAR OF LIFE SIGN

1. STAR OF LIFE SYMBOL SHALL BE PROVIDED ON THE MAIN FLOOR ONLY OF ELEVATORS DESIGNATED AS MEDICAL EMERGENCY SERVICE ELEVATORS.
2. STAR OF LIFE SYMBOL SHALL NOT BE LESS THAN 3" IN SIZE PER CBC 3002.4.5A.
3. SIGN SHALL BE PERMANENTLY ATTACHED TO EACH SIDE OF HOISTWAY DOOR FRAME PER CBC 3002.4.6A.

ELEVATOR STAR OF LIFE — N.T.S. — 9

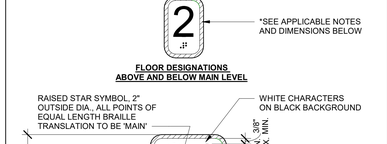

MAIN FLOOR DESIGNATION

1. FLOOR DESIGNATIONS SHALL BE PROVIDED ON BOTH JAMBS OF ELEVATOR HOISTWAY ENTRANCES ON EACH FLOOR OR LANDING LEVEL.
2. FLOOR DESIGNATIONS SHALL COMPLY WITH CBC 11B-703.2 FOR RAISED CHARACTERS, CBC 11B-703.3 FOR BRAILLE, AND CBC 11B-703.4.1 FOR MOUNTING HEIGHT.

ELEVATOR FLOOR DESIGNATION — 3" = 1'-0" — 4

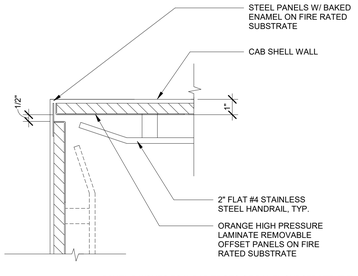

PANEL FINISHES TO WRAP EDGES OF PANEL SUBSTRATE, TYP

ELEVATOR CAB INSIDE CORNER — 3" = 1'-0" — 20

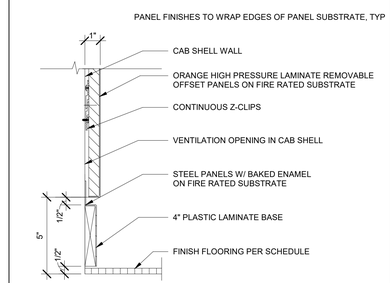

ELEVATOR CAB BASE — 3" = 1'-0" — 15

NOTE:
1. THE AUTOMATIC DOOR OPENING DEVICE IS TO BE ACTIVATED WHEN OBJECTS PASS THROUGH THE DOOR AT EITHER 5" OR 29" A.F.F.
2. ELEVATORS SHALL COMPLY WITH ALL THE ACCESSIBILITY REQUIREMENTS OF CBC SECTIONS 11B-407
3. ELEVATOR CAB SHALL BE MAINTAINED APPROXIMATELY LEVEL WITH THE LANDING, IRRESPECTIVE OF THE LOAD. THE CLEARANCE BETWEEN THE CAB PLATFORM SILL AND THE EDGE OF THE HOIST-WAY LANDING SHALL BE NO GREATER THAT 1 1/4 INCHES.
4. THE CENTERLINE OF THE HIGHEST OPERABLE PART OF THE CORRIDOR CALL BUTTONS SHALL BE 48" MAX. ABOVE THE FINISH SURFACE. BUTTONS SHALL BE A MIN. DIMENSION OF 3/4" AND SHALL BE RAISED 1/8" +/- 1/32" ABOVE THE SURROUNDING SURFACE. THE BUTTON DESIGNATING THE UP DIRECTION SHALL BE ON TOP. VISUAL INDICATION SHALL BE PROVIDED TO SHOW EACH CALL REGISTERED AND EXTINGUISHED WHEN ANSWERED.
5. OBJECTS ADJACENT TO AND BELOW CALL BUTTONS SHALL NOT PROJECT MORE THAT 4" FROM THE WALL.
6. CORRIDOR CALL BUTTONS SHALL BE INTERNALLY ILLUMINATED WITH A WHITE LIGHT OVER THE ENTIRE SURFACE OF THE BUTTON. THE CALL BUTTON THAT DESIGNATES THE UP DIRECTION SHALL BE LOCATED ABOVE THE DOWN BUTTON.
7. THE MINIMUM ILLUMINATION AT THE CAR CONTROLS THRESHOLD AND THE LANDING WHEN THE CAR AND LANDING DOORS ARE OPEN SHALL BE NO LESS THAT 5 FOOT-CANDLES.
8. CONTROL BUTTONS SHALL HAVE SQUARE SHOULDERS AND BE INTERNALLY ILLUMINATED.
9. THE ELEVATOR SHALL BE AUTOMATIC AND PROVIDED WITH A SELF-LEVELING FEATURE THAT WILL AUTOMATICALLY BRING THE CAR TO THE FLOOR LANDINGS WITHIN A TOLERANCE OF +/- 1/2" UNDER NORMAL LOADING AND UNLOADING CONDITION.
10. DOOR REOPENING DEVICES SHALL REMAIN EFFECTIVE FOR A PERIOD OF NOT LESS THAT 20 SECONDS.
11. THE MIN. ACCEPTABLE TIME FOR THE DOORS TO REMAIN OPEN SHALL NOT BE LESS THAT 5 SECONDS.
12. THE VISUAL SIGNAL FOR EACH DIRECTION SHALL BE A MIN. OF 2 1/2" HIGH BY 2 1/2" WIDE AND BE VISIBLE FROM THE PROXIMITY OF THE CORRIDOR CALL.
13. PROVIDE A TWO-WAY COMMUNICATION SYSTEM WITH BOTH AUDIBLE AND VISUAL SIGNALS AT THE ELEVATOR LANDING ON EACH ACCESSIBLE FLOOR THAT IS ONE OR MORE STORIES ABOVE OR BELOW THE STORY OF EXIT DISCHARGE.

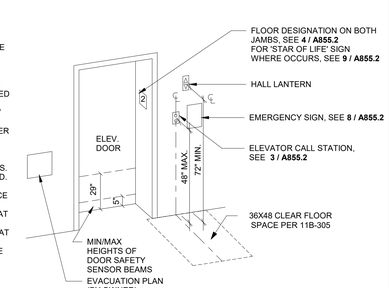

ELEVATOR ACCESS COMPLIANCE STANDARDS — N.T.S. — 5

TETER, INC.
ARCHITECTS ENGINEERS CONNECTED
FRESNO HEADQUARTERS
VISALIA | BAKERSFIELD | MODESTO | SAN LUIS OBISPO

VISALIA CAMPUS UNIVERSITY CENTER
COLLEGE OF THE SEQUOIAS - INCREMENT 2
915 S. MOONEY BLVD
VISALIA, CALIFORNIA

DRAWING TITLE
VERTICAL SYSTEM DETAILS

PROJECT NO.
22-12498

DRAWING
A855.2

PLOT DATE: 11/10/2025 9:08:22 AM

\\tet-file1\Users\tara.chong_TETR\Documents\12498-A-UC_tara.chong.rvt

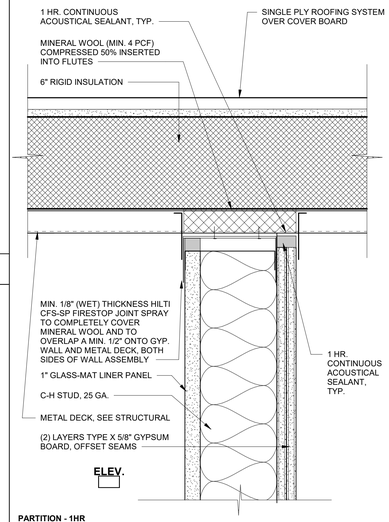

PARTITION - 1HR
UL DESIGN: UL263 / U469

FOR ADDITIONAL INFORMATION ON FIRE RATED ASSEMBLY, SEE **4 / A871.2** AND **19 / A870.2**

ROOF TERMINATION 3" = 1'-0" | 22

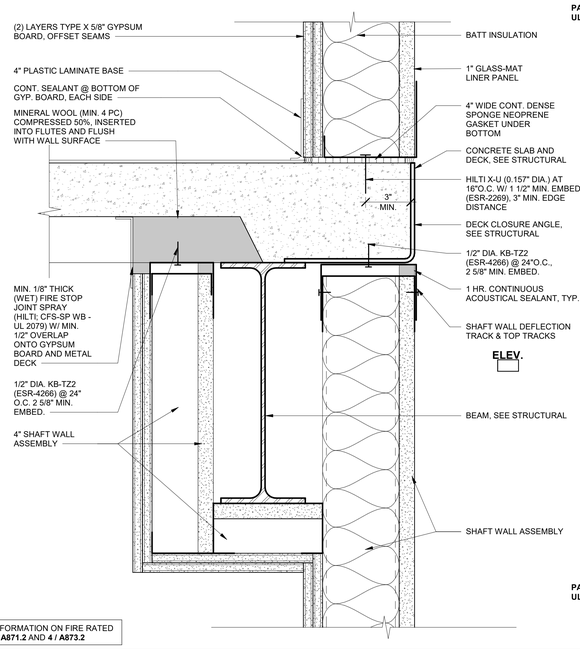

PARTITION - 1HR
UL DESIGN: UL263 / U469

FOR ADDITIONAL INFORMATION ON FIRE RATED ASSEMBLY, SEE **4 / A871.2** AND **4 / A873.2**

ELEVATOR SHAFT WALL AT SECOND FLOOR 3" = 1'-0" | 12

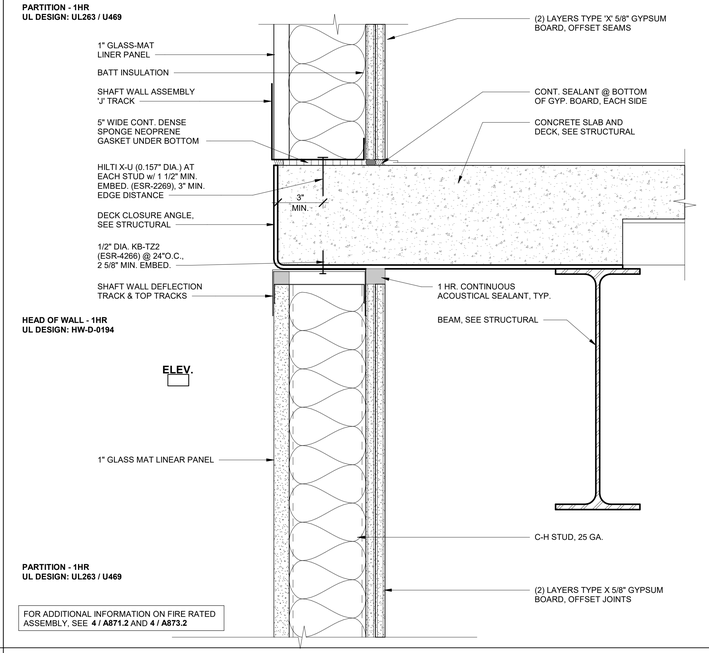

PARTITION - 1HR
UL DESIGN: UL263 / U469

HEAD OF WALL - 1HR
UL DESIGN: HW-D-0194

PARTITION - 1HR
UL DESIGN: UL263 / U469

FOR ADDITIONAL INFORMATION ON FIRE RATED ASSEMBLY, SEE **4 / A871.2** AND **4 / A873.2**

ELEVATOR SHAFT WALL AT FLOOR DECK 3" = 1'-0" | 2

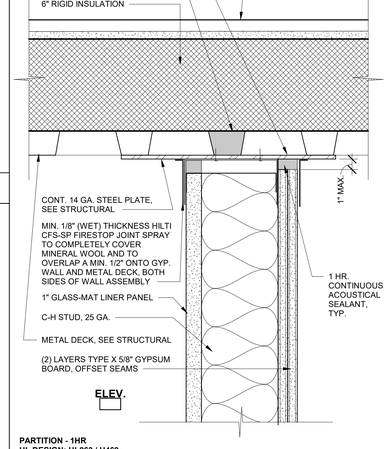

PARTITION - 1HR
UL DESIGN: UL263 / U469

FOR ADDITIONAL INFORMATION ON FIRE RATED ASSEMBLY, SEE **4 / A871.2** AND **19 / A870.2**

ROOF TERMINATION 3" = 1'-0" | 24

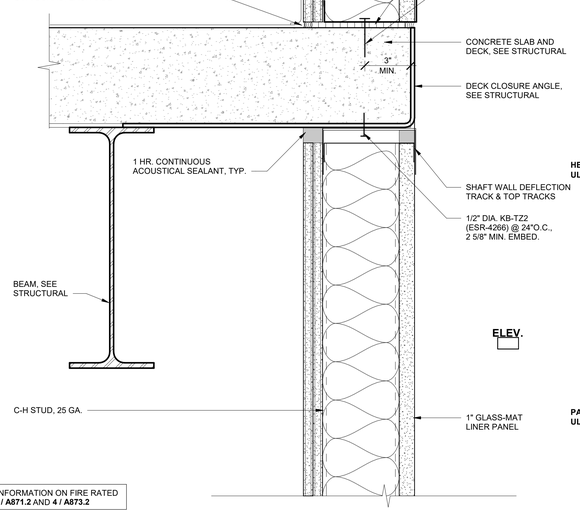

PARTITION - 1HR
UL DESIGN: UL263 / U469

HEAD OF WALL - 1HR
UL DESIGN: HW-D-0194

PARTITION - 1HR
UL DESIGN: UL263 / U469

FOR ADDITIONAL INFORMATION ON FIRE RATED ASSEMBLY, SEE **4 / A871.2** AND **4 / A873.2**

ELEVATOR SHAFT WALL AT SECOND FLOOR 3" = 1'-0" | 14

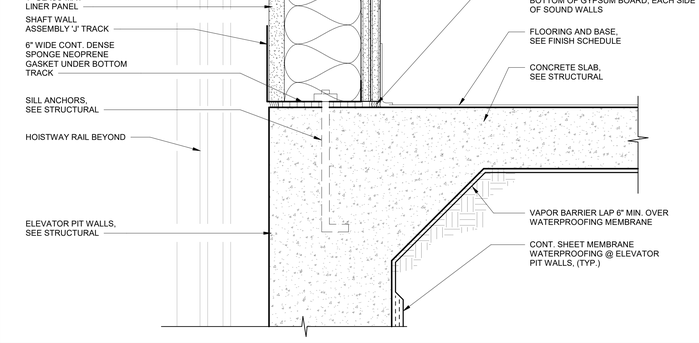

PARTITION - 1HR
UL DESIGN: UL263 / U469

ELEVATOR SHAFT WALL AT FIRST FLOOR SLAB, TYP. ALL 4 SIDES 3" = 1'-0" | 4

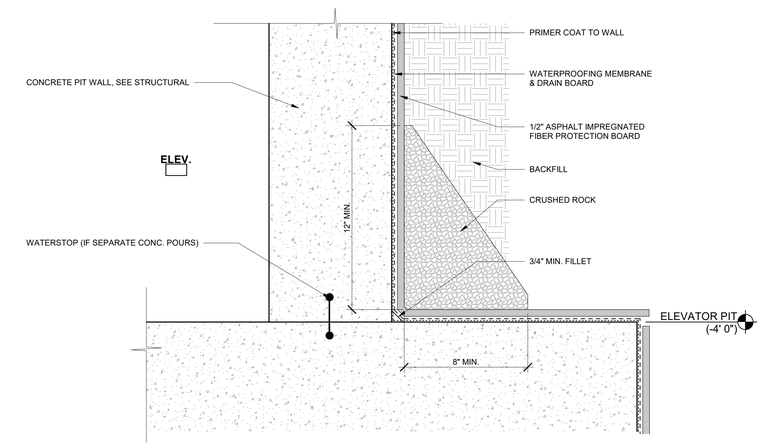

ELEVATOR PIT, TYP. ALL 4 SIDES 3" = 1'-0" | 5

PLOT DATE: 11/10/2025 9:08:28 AM

IDENTIFICATION STAMP
DIV. OF THE STATE ARCHITECT
APP: 02-122821 INC: 2
REVIEWED FOR
SS ☑ FLS ☑ ACS ☑
DATE: 11/20/2025

Teter, Inc. expressly reserves its common law copyright and other property rights in these plans. This document, the ideas and designs incorporated herein, as an instrument of professional service, is not to be used in whole or part, for any other project without prior written authorization.

MARK	DATE	DESCRIPTION
A	11/13/2025	DSA BACKCHECK

LICENSED ARCHITECT ★ REGISTERED PROFESSIONAL ENGINEER ★ STATE OF CALIFORNIA

TETER, INC.
ARCHITECTS ENGINEERS CONNECTED
FRESNO HEADQUARTERS
VISALIA | BAKERSFIELD | MODESTO | SAN LUIS OBISPO

TETER

VISALIA CAMPUS UNIVERSITY CENTER
COLLEGE OF THE SEQUOIAS - INCREMENT 2
915 S. MOONEY BLVD
VISALIA, CALIFORNIA

DRAWING TITLE
VERTICAL SYSTEM DETAILS

PROJECT NO.
22-12498

DRAWING
A856.2

\\tet-file1\Users\tara.chong_TETR\Documents\12498-A-UC_tara.chong.rvt

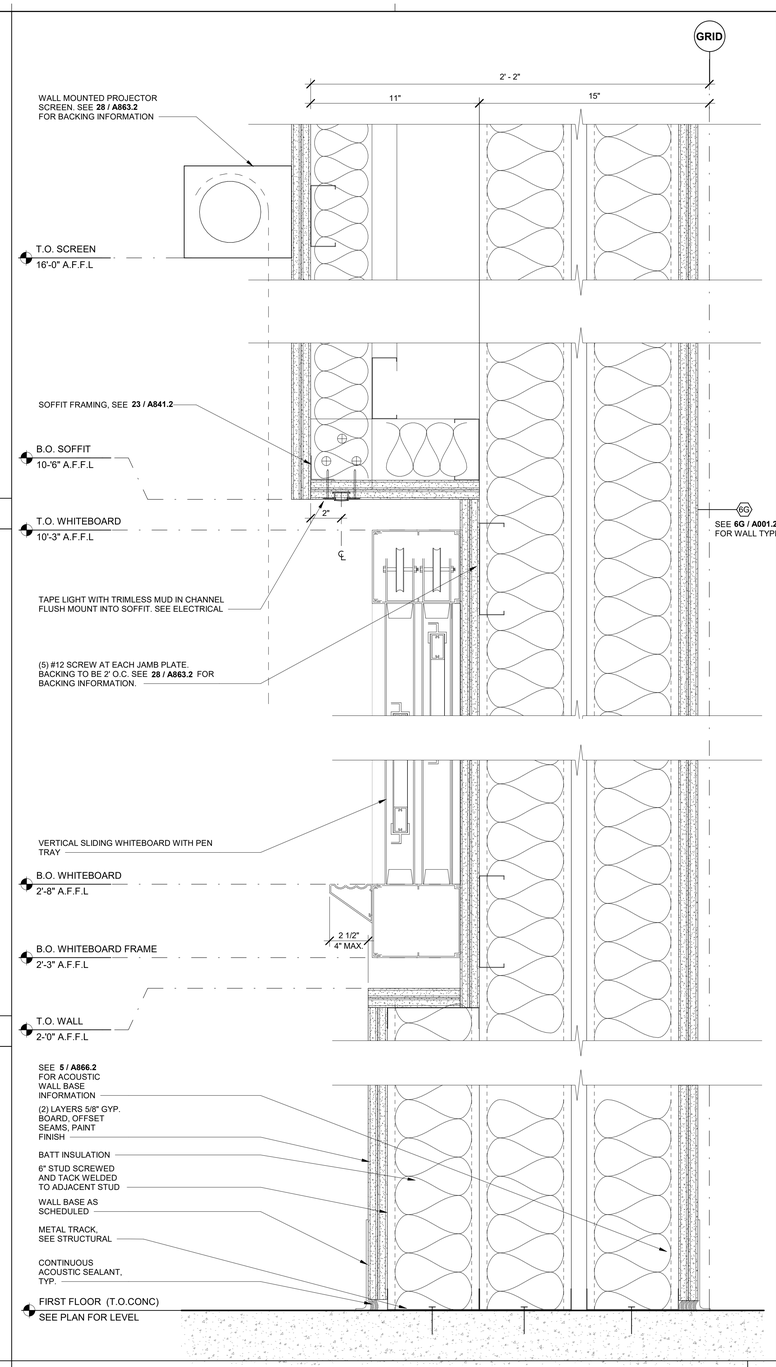

LECTURE ROOM TEACHING WALL 3" = 1'-0" | 14

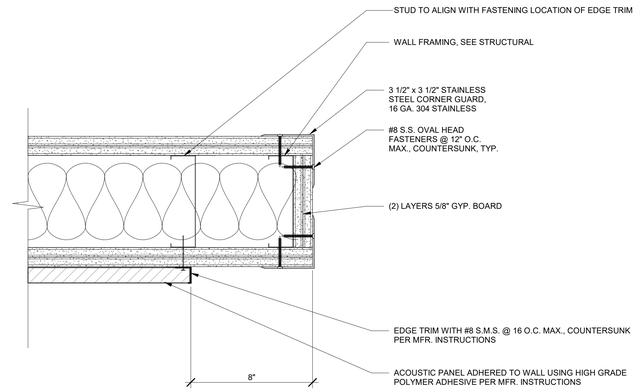

TYP. ACOUSTIC PANEL CLOSURE AT WALL END 3" = 1'-0" | 2

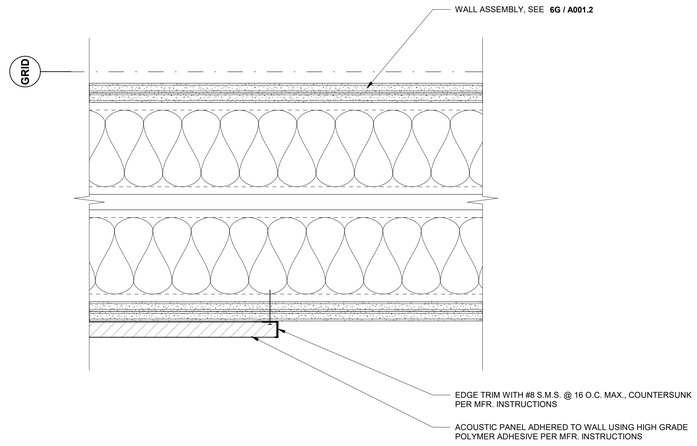

TYP. ACOUSTIC PANEL VERTICAL END 3" = 1'-0" | 3

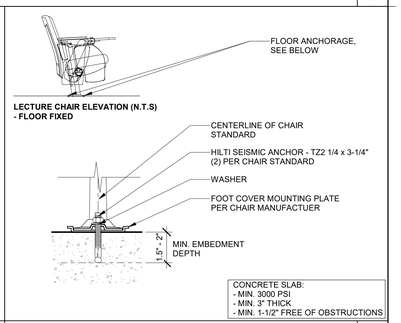

LECTURE CHAIR ANCHORAGE 3" = 1'-0" | 4

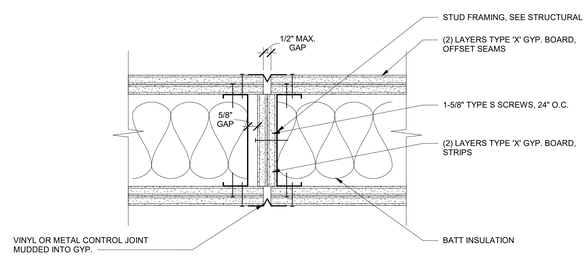

GYPSUM BOARD EXPANSION JOINT - PLAN 3" = 1'-0" | 5

IDENTIFICATION STAMP
DIV. OF THE STATE ARCHITECT
APP: 02-122821 INC: 2
REVIEWED FOR
SS ☑ FLS ☑ ACS ☑
DATE: 11/20/2025

Teter, Inc. expressly reserves its common law copyright and other property rights in these plans. This document, the ideas and designs incorporated herein, as an instrument of professional service, is not to be used in whole or in part, for any other project without prior written authorization.

MARK	DATE	DESCRIPTION
A	11/13/2025	DSA BACKCHECK

LICENSED ARCHITECT DOUGLAS M. STANLEY No. C-29421 STATE OF CALIFORNIA

TETER, INC.
FRESNO HEADQUARTERS
VISALIA | BAKERSFIELD | MODESTO | SAN LUIS OBISPO
ARCHITECTS ENGINEERS CONNECTED

VISALIA CAMPUS UNIVERSITY CENTER
COLLEGE OF THE SEQUOIAS - INCREMENT 2
915 S. MOONEY BLVD
VISALIA, CALIFORNIA

DRAWING TITLE
INTERIOR DETAILS

PROJECT NO.
22-12498

DRAWING
A861.2

PLOT DATE: 11/10/2025 9:08:34 AM

\\tet-file1\Users\tara.chong_TETR\Documents\12498-A-UC_tara.chong.rvt

NOTE:
1. GRIND ALL WELDS AND EDGES SMOOTH
2. ENTIRE ASSEMBLY TO BE GALVANIZED AFTER FABRICATION IN LARGEST SECTIONS POSSIBLE

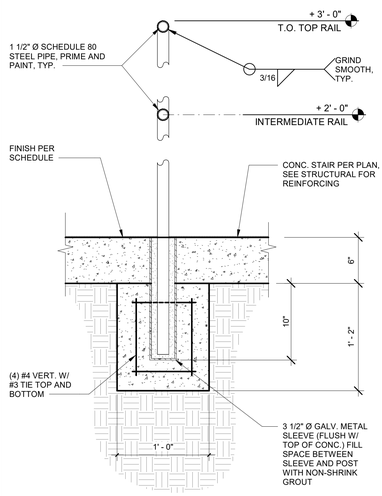

DISCONTINUOUS HANDRAIL AND FOOTING 1 1/2" = 1'-0" | 22

NOTE:
1. GRIND ALL WELDS AND EDGES SMOOTH.
2. ENTIRE ASSEMBLY TO BE GALVANIZED AFTER FABRICATION IN LARGEST SECTIONS POSSIBLE

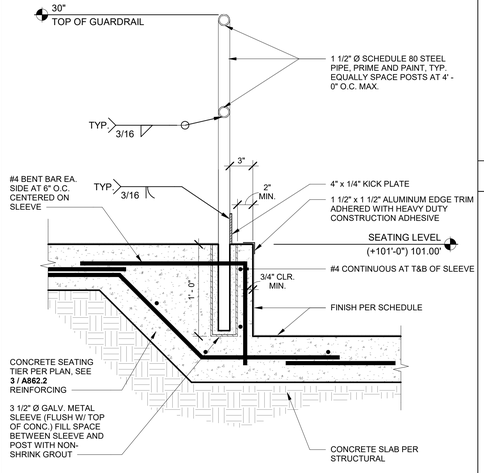

LECTURE GUARDRAIL - SECTION 1 1/2" = 1'-0" | 12

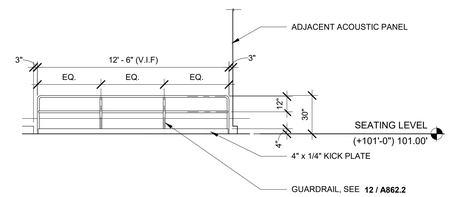

LECTURE GUARDRAIL - ELEVATION 1/4" = 1'-0" | 6

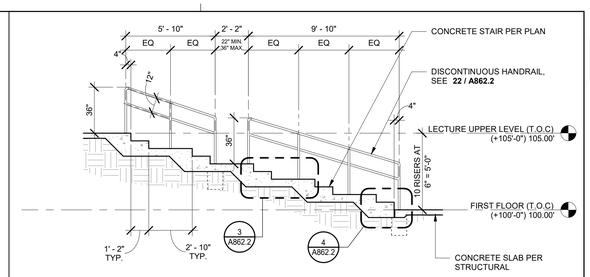

LECTURE ROOM STEPPED AISLE - SECTION 1/4" = 1'-0" | 1

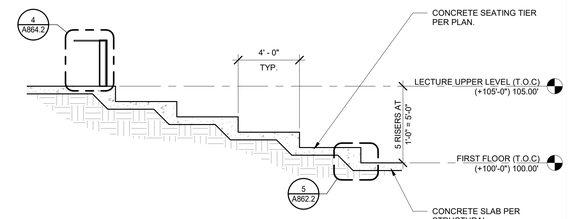

LECTURE ROOM TIERED SEATING - SECTION 1/4" = 1'-0" | 2

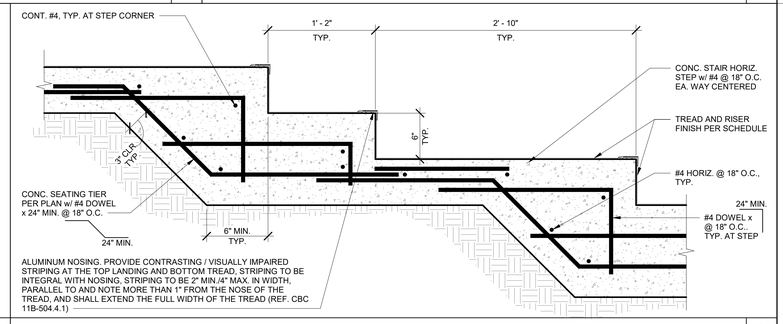

LECTURE ROOM STEPPED AISLE 1 1/2" = 1'-0" | 3

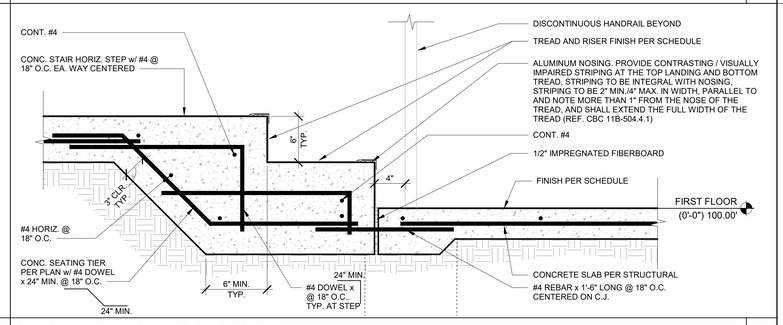

STEPPED AISLE AT CONC. SLAB 1 1/2" = 1'-0" | 4

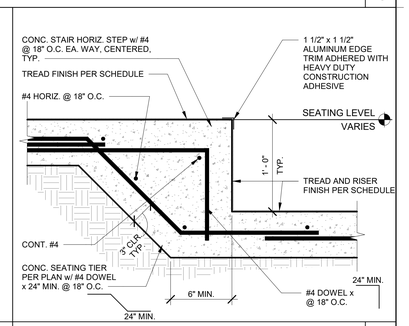

LECTURE ROOM TIERED SEATING STEPS 1 1/2" = 1'-0" | 5

IDENTIFICATION STAMP
DIV. OF THE STATE ARCHITECT
APP: 02-122821 INC: 2
REVIEWED FOR
SS ☑ FLS ☑ ACS ☑
DATE: 11/20/2025

Teter, Inc. expressly reserves its common law copyright and other property rights in these plans. This document, the ideas and designs incorporated herein, as an instrument of professional service, is not to be used in whole or part, for any other project without prior written authorization.

MARK	DATE	DESCRIPTION
A	11/13/2025	DSA BACKCHECK

LICENSED ARCHITECT — CONSULTANT — STATE OF CALIFORNIA

TETER, INC.
FRESNO HEADQUARTERS
VISALIA | BAKERSFIELD | MODESTO | SAN LUIS OBISPO
ARCHITECTS ENGINEERS CONNECTED

VISALIA CAMPUS UNIVERSITY CENTER
COLLEGE OF THE SEQUOIAS - INCREMENT 2
915 S. MOONEY BLVD
VISALIA, CALIFORNIA

DRAWING TITLE
INTERIOR DETAILS

PROJECT NO.
22-12498

DRAWING
A862.2

PLOT DATE: 11/10/2025 9:08:43 AM

\\tet-file1\Users\tara.chong_TETR\Documents\12498-A-UC_tara.chong.rvt

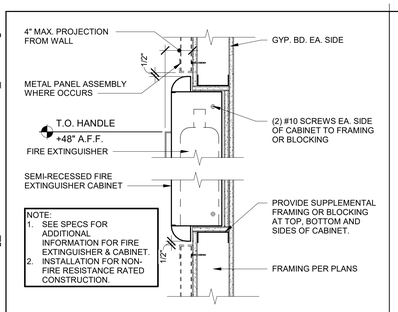

FIRE EXTINGUISHER CABINET 1 1/2" = 1'-0" | 26

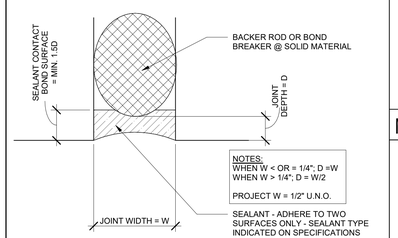

SEALANT JOINT DETAIL 3" = 1'-0" | 27

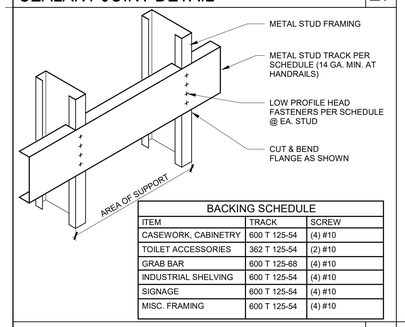

BACKING SCHEDULE		
ITEM	TRACK	SCREW
CASEWORK, CABINETRY	600 T 125-54	(4) #10
TOILET ACCESSORIES	362 T 125-54	(2) #10
GRAB BAR	600 T 125-68	(4) #10
INDUSTRIAL SHELVING	600 T 125-54	(4) #10
SIGNAGE	600 T 125-54	(4) #10
MISC. FRAMING	600 T 125-54	(4) #10

METAL BACKING (TYP.) 1 1/2" = 1'-0" | 28

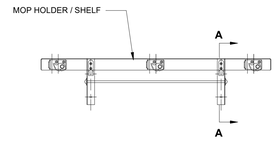

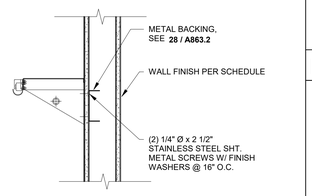

SECTION A - A

MOP HOLDER 1 1/2" = 1'-0" | 21

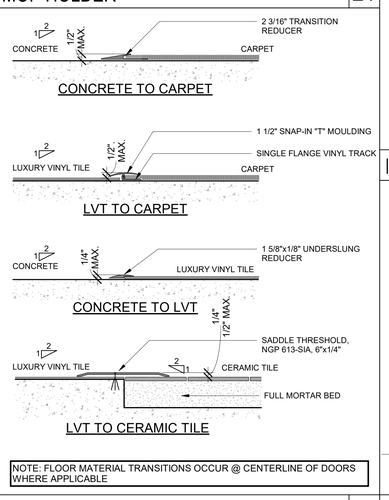

NOTE: FLOOR MATERIAL TRANSITIONS OCCUR @ CENTERLINE OF DOORS WHERE APPLICABLE

FLOOR TRANSITIONS 3" = 1'-0" | 23

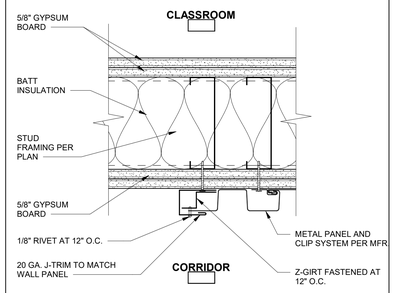

INT. METAL PANEL AT GYP. BOARD 3" = 1'-0" | 16

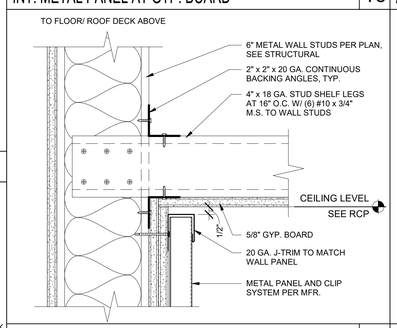

INT. METAL PANEL AT GYP. BOARD CEILING 3" = 1'-0" | 17

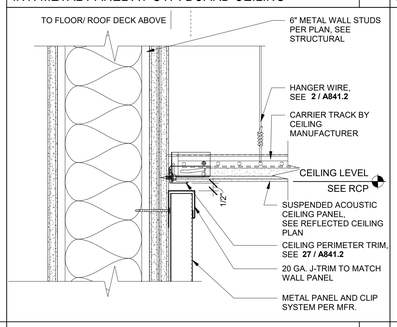

INT. METAL PANEL AT ACT CEILING 3" = 1'-0" | 18

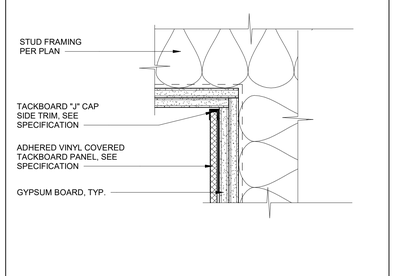

TACKBOARD @ WALL CORNER 3" = 1'-0" | 19

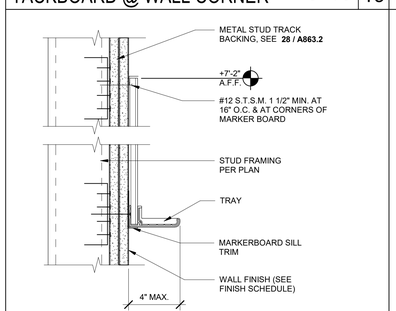

MARKERBOARD, TYP. 3" = 1'-0" | 20

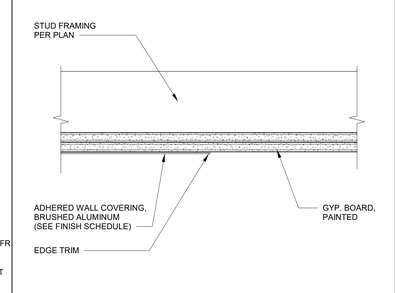

ALUMINUM WALL COVERING TO GYP. BD. 3" = 1'-0" | 11

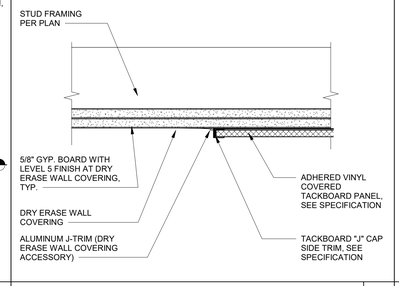

DRY ERASE WC TACKBOARD TRANSITION 3" = 1'-0" | 12

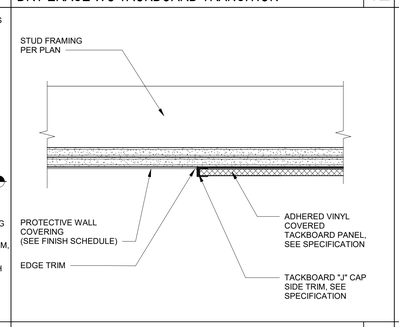

TACKBOARD TO FRP 3" = 1'-0" | 13

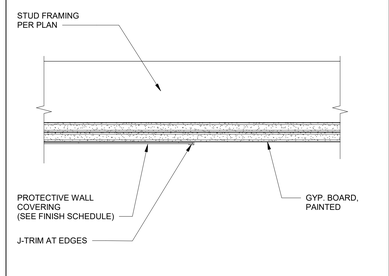

FRP AT GYP. BOARD 3" = 1'-0" | 14

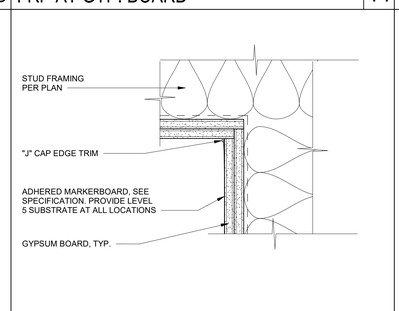

DRY ERASE WC @ WALL CORNER 3" = 1'-0" | 15

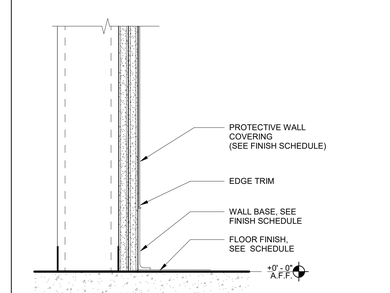

FRP TO WALL BASE 3" = 1'-0" | 6

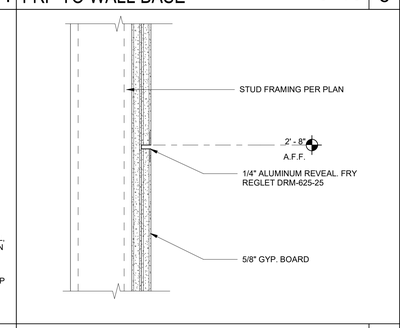

REVEAL AT CLASSROOMS 3" = 1'-0" | 7

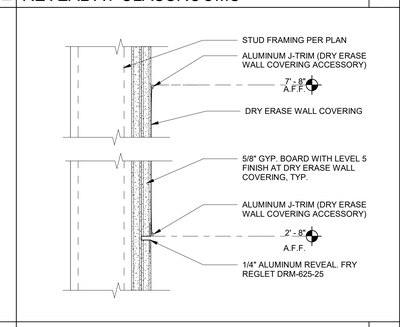

DRY ERASE WALL COVERING AT REVEAL 3" = 1'-0" | 8

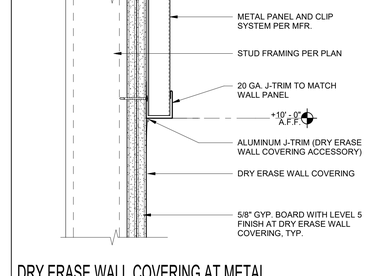

DRY ERASE WALL COVERING AT METAL PANEL 3" = 1'-0" | 9

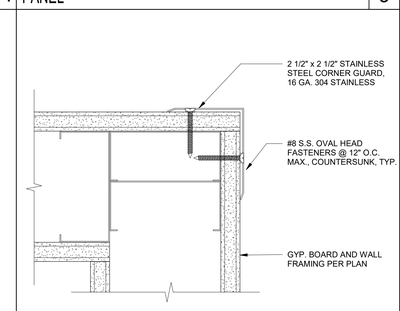

CORNER GUARDS 6" = 1'-0" | 10

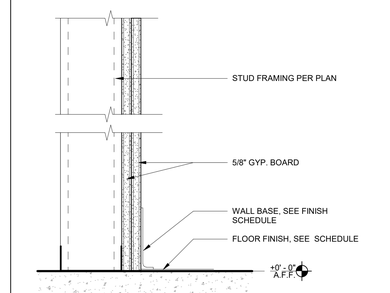

TYP. WALL BASE 3" = 1'-0" | 1

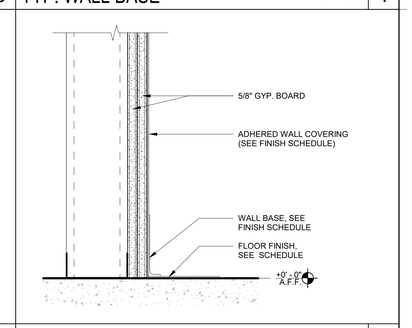

ALUMINUM WALL COVERING AT WALL BASE 3" = 1'-0" | 2

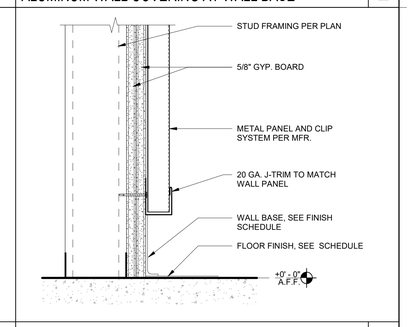

METAL PANEL AT WALL BASE 3" = 1'-0" | 3

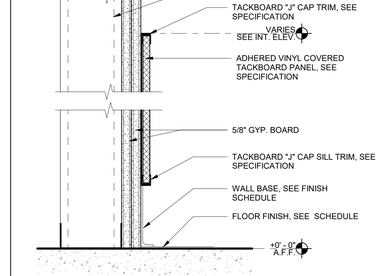

TACKBOARD 4

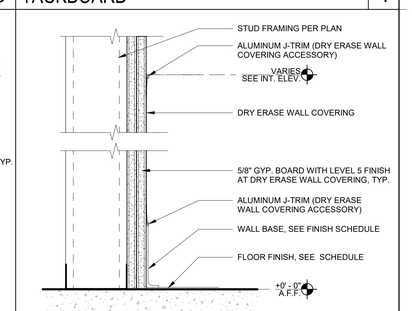

DRY ERASE WALL COVERING 3" = 1'-0" | 5

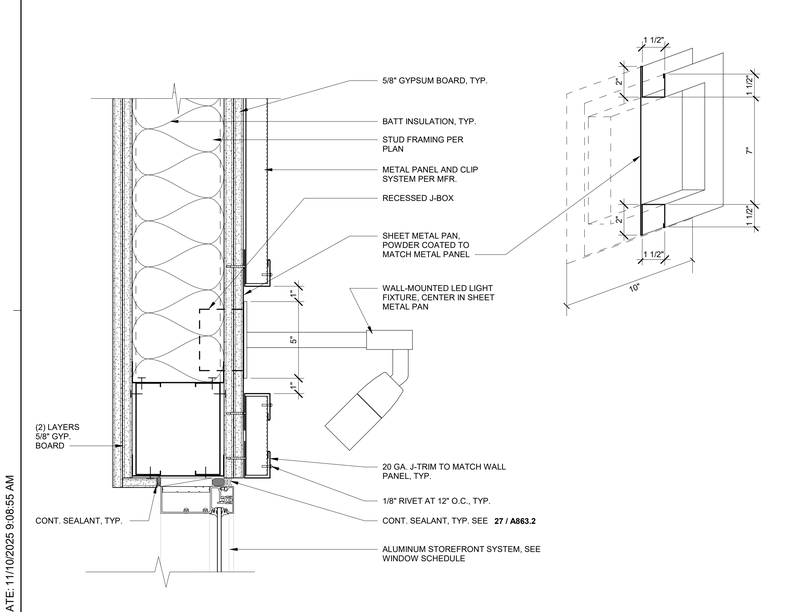

WALL LIGHT FIXTURE TO METAL PANEL ATTACHMENT 3" = 1'-0" | 25

PLOT DATE: 11/10/2025 9:08:55 AM

IDENTIFICATION STAMP
DIV. OF THE STATE ARCHITECT
APP: 02-122821 INC: 2
REVIEWED FOR
SS ☑ FLS ☑ ACS ☑
DATE: 11/20/2025

Teter, Inc. expressly reserves its common law copyright and other property rights in these plans. This document, the ideas and designs incorporated herein, as an instrument of professional service, is not to be used in whole or in part, for any other project without prior written authorization.

MARK	DATE	DESCRIPTION
A.	11/13/2025	DSA BACKCHECK

LICENSED ARCHITECT REGISTERED PROFESSIONAL ENGINEER CERTIFIED ACCESS SPECIALIST STATE OF CALIFORNIA

TETER, INC.
FRESNO HEADQUARTERS
VISALIA | BAKERSFIELD | MODESTO | SAN LUIS OBISPO
ARCHITECTS ENGINEERS CONNECTED

TETER

VISALIA CAMPUS UNIVERSITY CENTER
COLLEGE OF THE SEQUOIAS - INCREMENT 2
915 S. MOONEY BLVD
VISALIA, CALIFORNIA

DRAWING TITLE
INTERIOR DETAILS

PROJECT NO.
22-12498

DRAWING
A863.2

\\tet-file1\Users\tara.chong_TETR\Documents\12498-A-UC_tara.chong.rvt

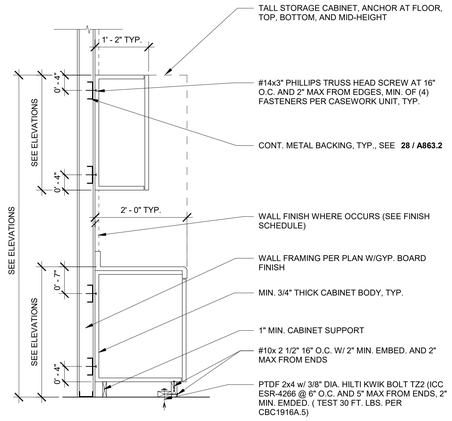

CASEWORK ANCHORAGE 3/4" = 1'-0" | 22

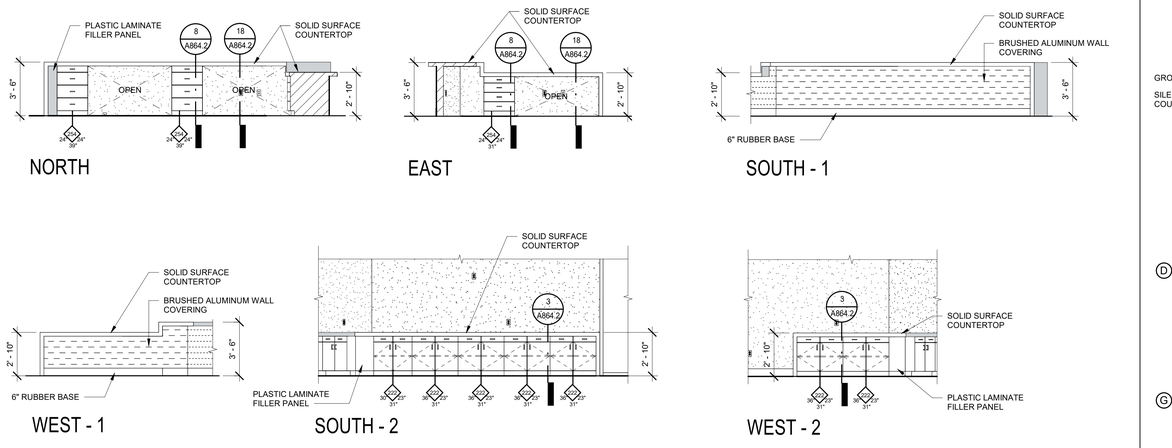

RECEPTION DESK ELEVATIONS 1/4" = 1'-0" | 7

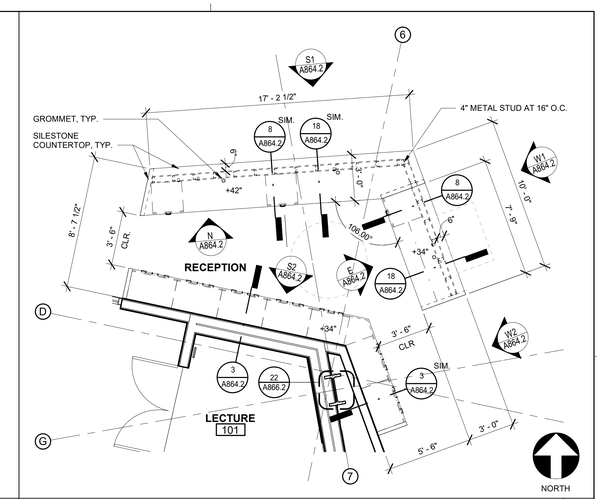

RECEPTION DESK - ENLARGED PLAN 1/4" = 1'-0" | 2

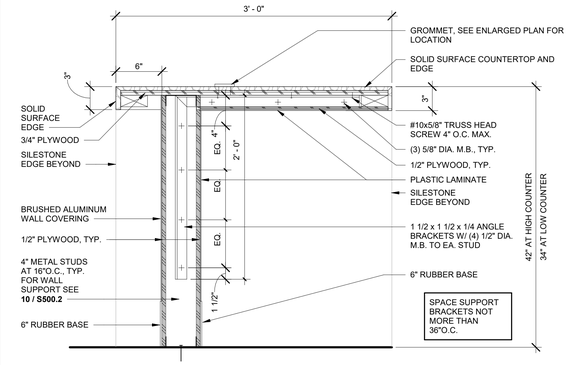

RECEPTION COUNTER 1 1/2" = 1'-0" | 18

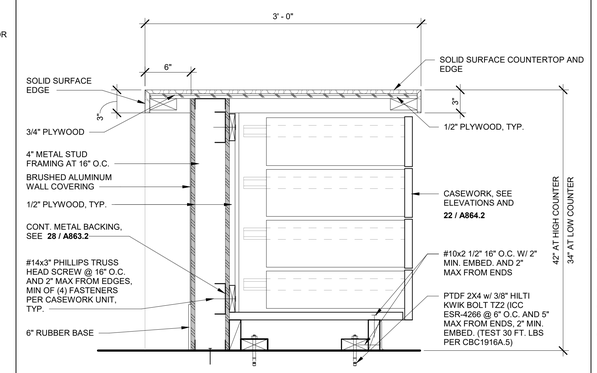

RECEPTION DESK FILE DRAWERS 1 1/2" = 1'-0" | 8

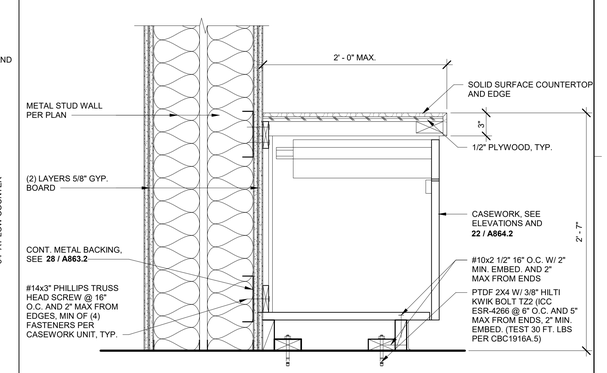

RECEPTION CASEWORK AT WALL 1 1/2" = 1'-0" | 3

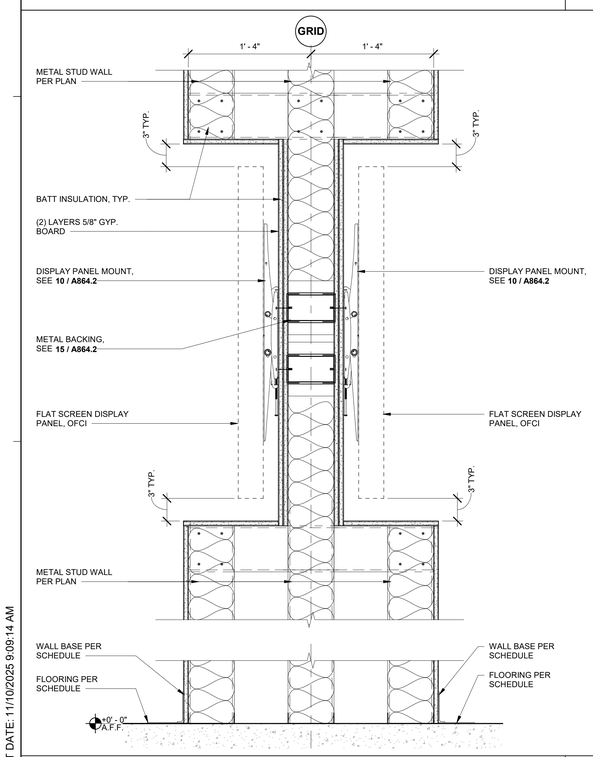

INSET DISPLAY AT MEETING 103D & 104D 1 1/2" = 1'-0" | 25

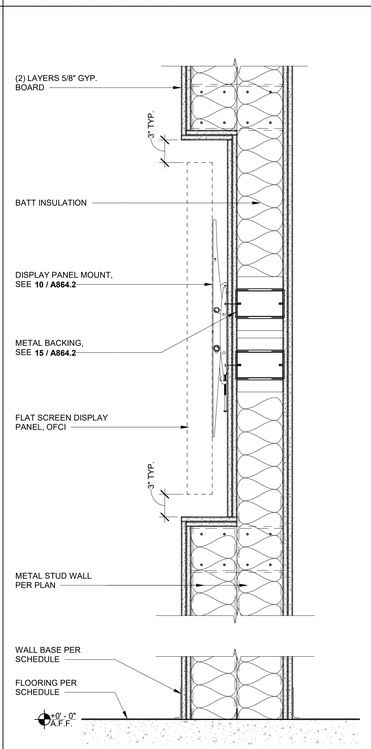

INSET DISPLAY AT MEETING 201B 1 1/2" = 1'-0" | 20

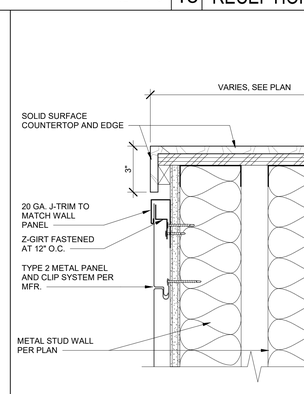

METAL PANEL AT SOLID SURFACE SILL 3" = 1'-0" | 14

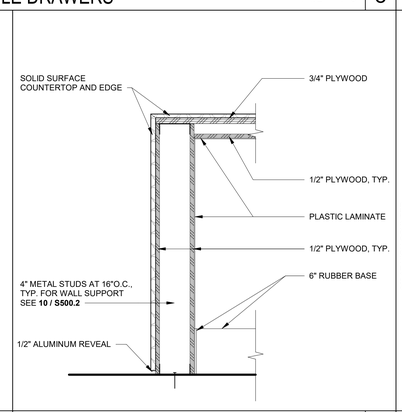

LECTURE COUNTER - END WALL 1 1/2" = 1'-0" | 9

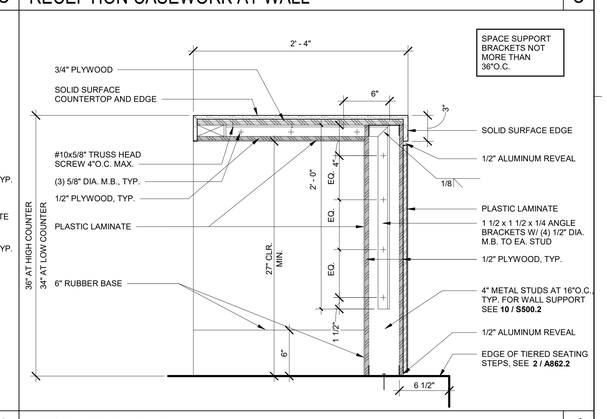

LECTURE TABLE 1 1/2" = 1'-0" | 4

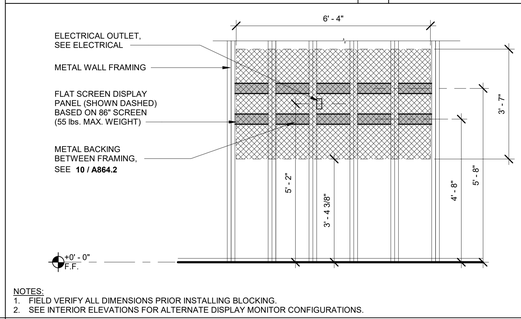

BACKING @ DISPLAY PANEL 1/2" = 1'-0" | 15

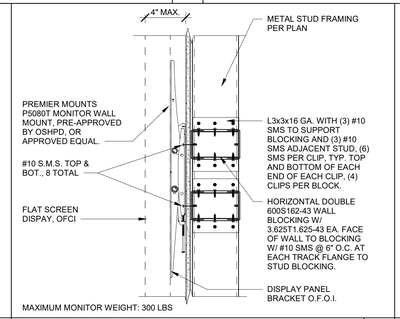

DISPLAY PANEL MOUNT DETAIL 1 1/2" = 1'-0" | 10

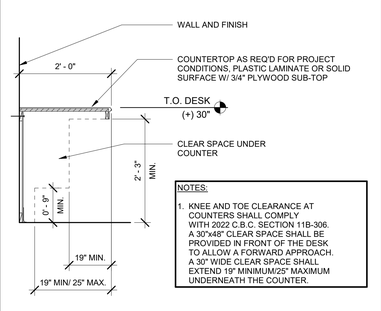

DESK KNEE / TOE CLEARANCE 3/4" = 1'-0" | 5

PLOT DATE: 11/10/2025 9:09:14 AM

IDENTIFICATION STAMP
DIV. OF THE STATE ARCHITECT
APP: 02-122821 INC: 2
REVIEWED FOR
SS ☑ FLS ☑ ACS ☑
DATE: 11/20/2025

Teter, Inc. expressly reserves its common law copyright and other property rights in these plans. This document, the ideas and designs incorporated herein, as an instrument of professional service, is not to be used in whole or in part, for any other project without prior written authorization.

MARK	DATE	DESCRIPTION
A.	11/13/2025	DSA BACKCHECK

LICENSED ARCHITECT ★ CONSULTANT ★ STATE OF CALIFORNIA

TETER, INC.
FRESNO HEADQUARTERS
VISALIA | BAKERSFIELD | MODESTO | SAN LUIS OBISPO
ARCHITECTS ENGINEERS CONNECTED

VISALIA CAMPUS UNIVERSITY CENTER
COLLEGE OF THE SEQUOIAS - INCREMENT 2
915 S. MOONEY BLVD
VISALIA, CALIFORNIA

DRAWING TITLE
INTERIOR DETAILS

PROJECT NO.
22-12498

DRAWING
A864.2

\\tet-file1\Users\tara.chong_TETR\Documents\12498-A-UC_tara.chong.rvt

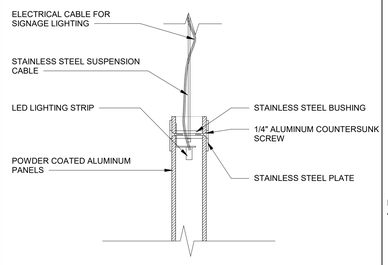

SIGNAGE TO CABLE FASTENING 3" = 1'-0" | 10

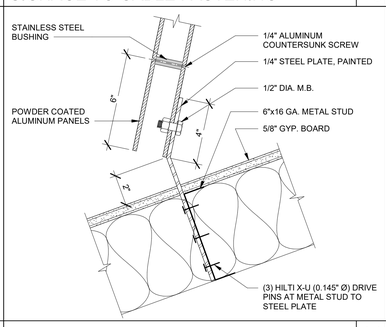

SIGNAGE AT WALL 3" = 1'-0" | 11

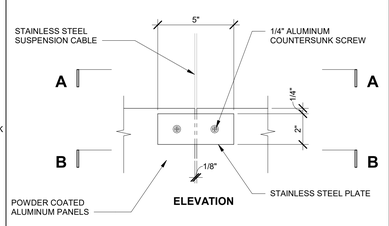

ELEVATION

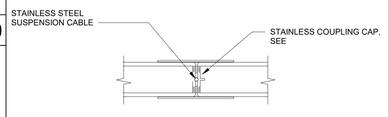

SECTION A-A

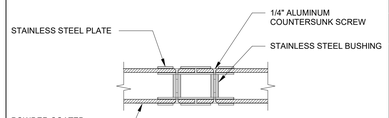

SECTION B-B

PLATE FASTENING 3" = 1'-0" | 12

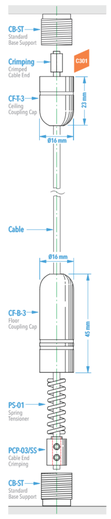

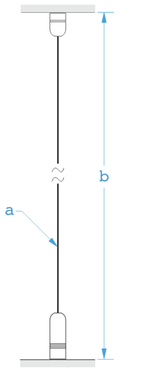

CEILING-TO-FLOOR CABLE SUSPENSION KIT

Part #	Cable Diameter (a)	Cable Length (b)
C301-4M/SS	3mm (1/8")	4M (13' 1-1/2")
Finish	Load Limit	Allen Wrench
Natural Stainless Steel	200kg (441lb) *Subject to fixing	1.5mm Metric

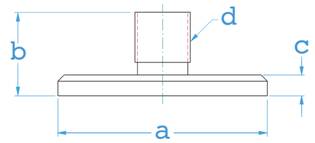

50MM BASE SUPPORT / HEAVY DUTY

Part #	Diameter (a)	Height (b)	Base Thickness (c)	Threads (d)
CB-50/SS	50mm (2")	20mm (25/32")	5mm (13/64")	M12 *Use as optional base support for C100-2M/SS, C101-4M/SS, C113-3M/SS cable sets.
	Finish	Load Limit	Screw Hole Dia.	
	Natural Stainless Steel	200kg (441lbs) *Subject to fixing	3 x 6mm (15/64")	

SUSPENSION CABLE N.T.S. | 15

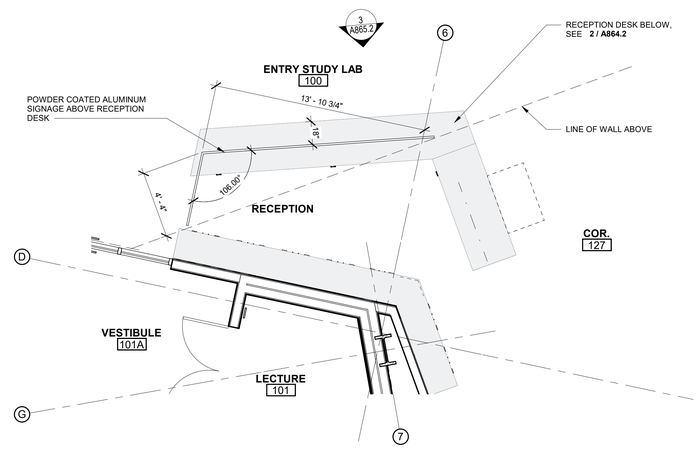

SIGNAGE SETOUT PLAN 1/4" = 1'-0" | 1

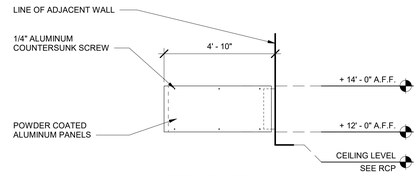

SIDE ELEVATION

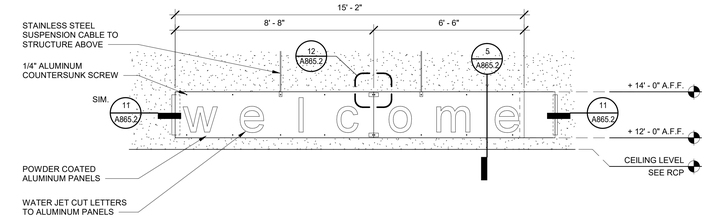

FRONT ELEVATION

SIGNAGE ELEVATION 3/8" = 1'-0" | 3

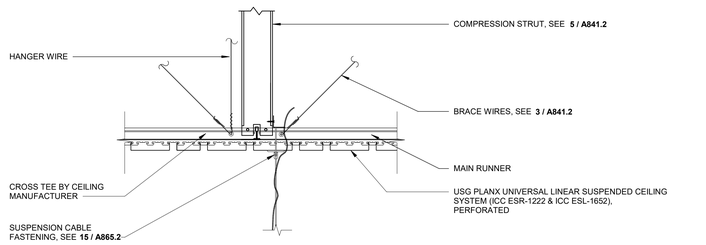

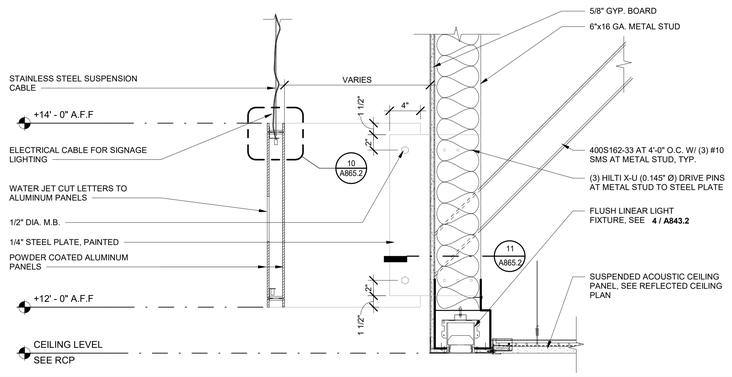

SIGNAGE SECTION 1 1/2" = 1'-0" | 5

IDENTIFICATION STAMP
DIV. OF THE STATE ARCHITECT
APP: 02-122821 INC: 2
REVIEWED FOR
SS ☑ FLS ☑ ACS ☑
DATE: 11/20/2025

Teter, Inc. expressly reserves its common law copyright and other property rights in these plans. This document, the ideas and designs incorporated herein, as an instrument of professional service, is not to be used in whole or in part, for any other purpose without prior written authorization.

MARK	DATE	DESCRIPTION
A	11/13/2025	DSA BACKCHECK

LICENSED ARCHITECT ★ STATE OF CALIFORNIA ★ CONSTRUCTION CONFORMANCE

TETER, INC.
ARCHITECTS ENGINEERS CONNECTED
FRESNO HEADQUARTERS
VISALIA | BAKERSFIELD | MODESTO | SAN LUIS OBISPO

VISALIA CAMPUS UNIVERSITY CENTER
COLLEGE OF THE SEQUOIAS - INCREMENT 2
915 S. MOONEY BLVD
VISALIA, CALIFORNIA

DRAWING TITLE
INTERIOR DETAILS

PROJECT NO.
22-12498

DRAWING
A865.2

PLOT DATE: 11/10/2025 9:09:24 AM

\\tet-file1\Users\tara.chong_TETR\Documents\12498-A-UC_tara.chong.rvt

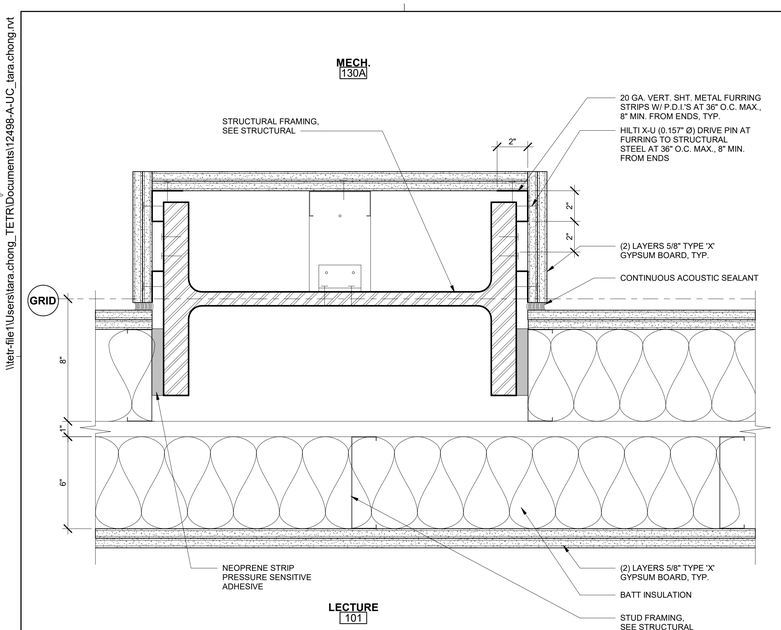

COLUMN FURRING AT LECTURE 3" = 1'-0" | 22

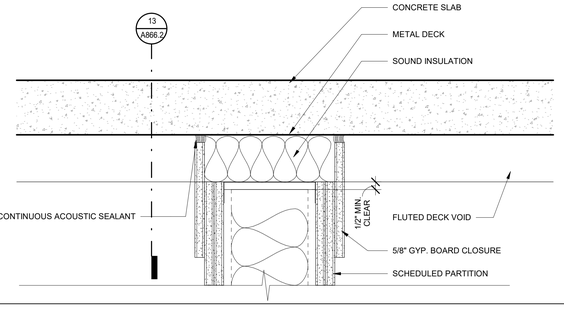

TYPICAL PARTITION PERPENDICULAR TO FLUTED DECK 3" = 1'-0" | 11

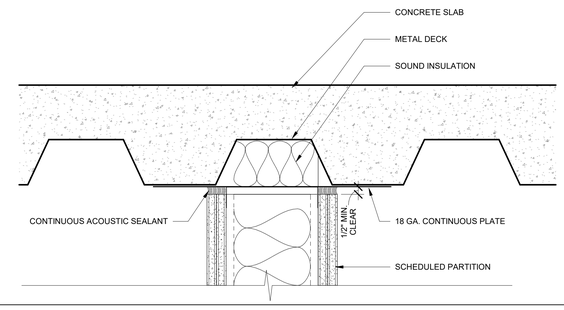

TYPICAL PARTITION PARALLEL TO FLUTED DECK 3" = 1'-0" | 12

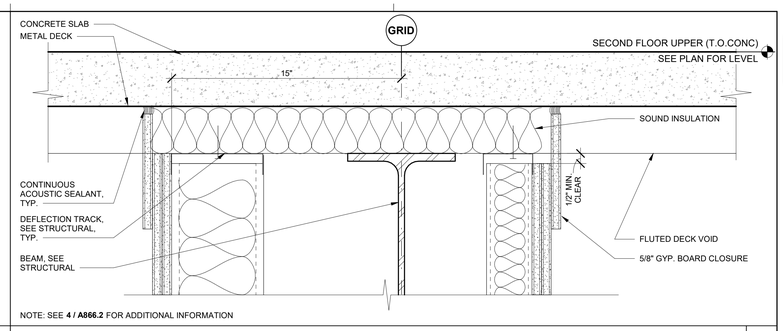

NOTE: SEE **4 / A866.2** FOR ADDITIONAL INFORMATION

DOUBLE STUD PARTITION AT 2F UPPER SLAB 3" = 1'-0" | 1

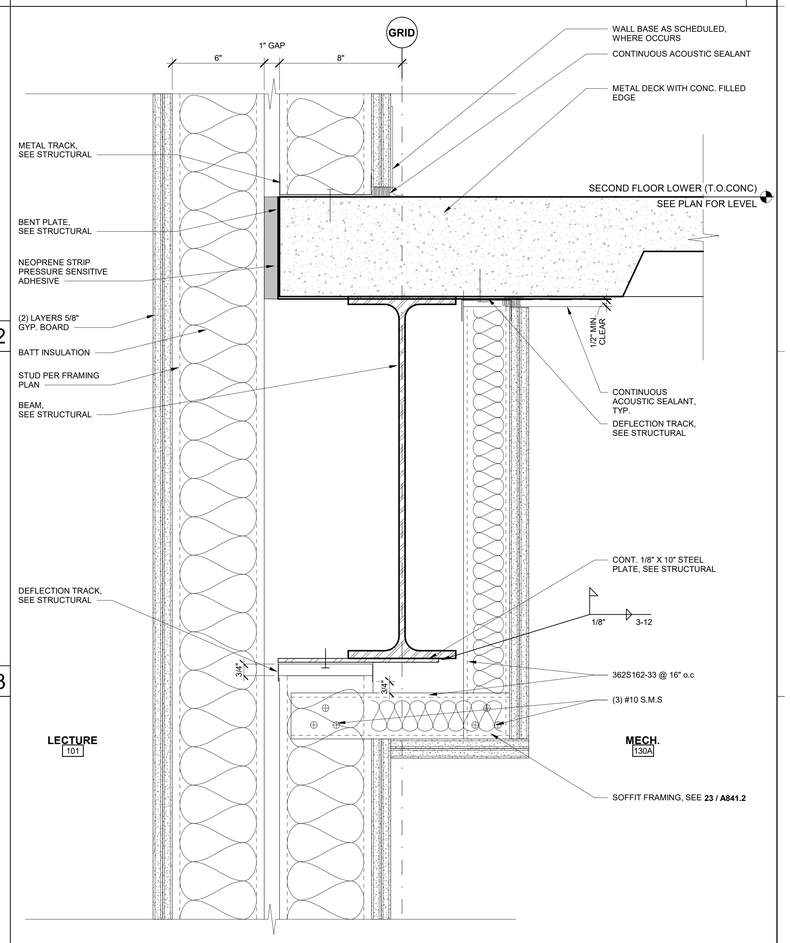

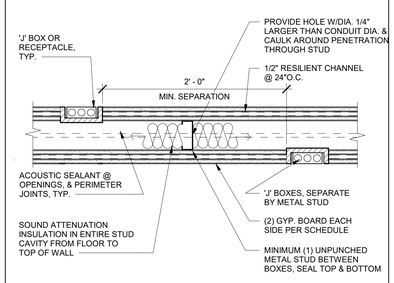

WALL PLAN ACOUSTIC 1 1/2" = 1'-0" | 23

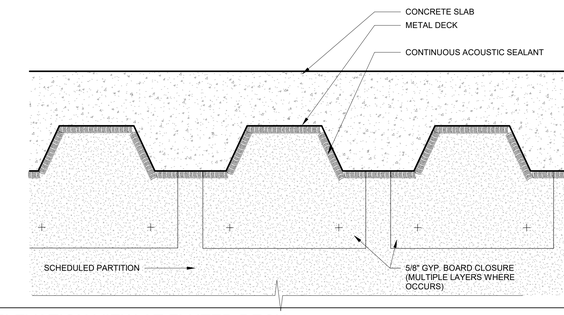

TYPICAL ELEVATION VIEW AT FLUTED DECK 3" = 1'-0" | 13

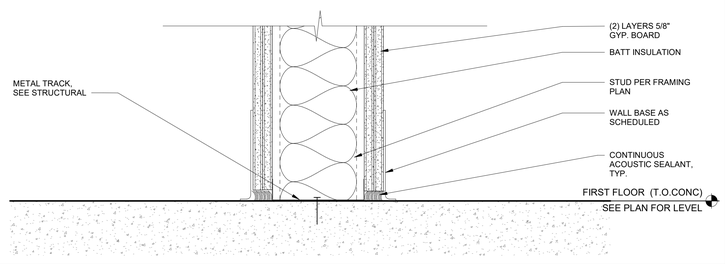

TYP. PARTITION AT SLAB 3" = 1'-0" | 14

DOUBLE STUD PARTITION AT 2F LOWER SLAB 3" = 1'-0" | 4

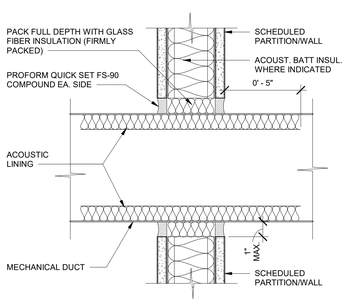

ACOUSTIC SEAL AT DUCT 3" = 1'-0" | 20

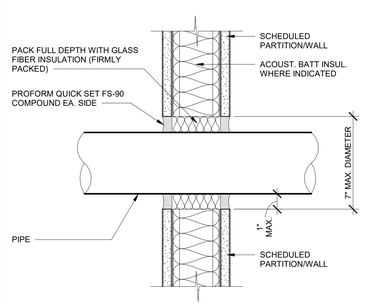

ACOUSTIC SEAL AT PIPE 3" = 1'-0" | 15

PLOT DATE: 11/10/2025 9:09:32 AM

IDENTIFICATION STAMP
DIV. OF THE STATE ARCHITECT
APP: 02-122821 INC: 2
REVIEWED FOR
SS ☑ FLS ☑ ACS ☑
DATE: 11/20/2025

Teter, Inc. expressly reserves its common law copyright and other property rights in these plans. This document, the ideas and designs incorporated herein, as an instrument of professional service, is not to be used in whole or part, for any other project without prior written authorization.

MARK	DATE	DESCRIPTION
A.	11/13/2025	DSA BACKCHECK

LICENSED ARCHITECT ★ JOSEPH A. TETER ★ No. C-20252 ★ STATE OF CALIFORNIA

TETER, INC.
FRESNO HEADQUARTERS
VISALIA | BAKERSFIELD | MODESTO | SAN LUIS OBISPO
ARCHITECTS ENGINEERS CONNECTED

TETER

VISALIA CAMPUS UNIVERSITY CENTER
COLLEGE OF THE SEQUOIAS - INCREMENT 2
915 S. MOONEY BLVD
VISALIA, CALIFORNIA

DRAWING TITLE
ACOUSTIC DETAILS

PROJECT NO.
22-12498

DRAWING
A866.2

\\tet-file1\Users\tara.chong_TETR\Documents\12498-A-UC_tara.chong.rvt

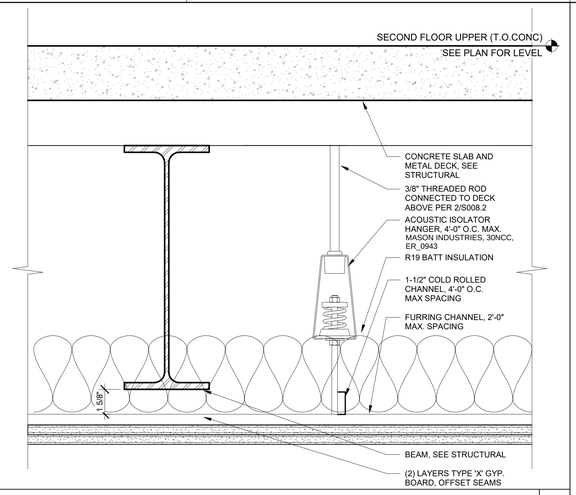

ACOUSTIC ISOLATOR AT GYP. BOARD CEILING 3" = 1'-0" 17

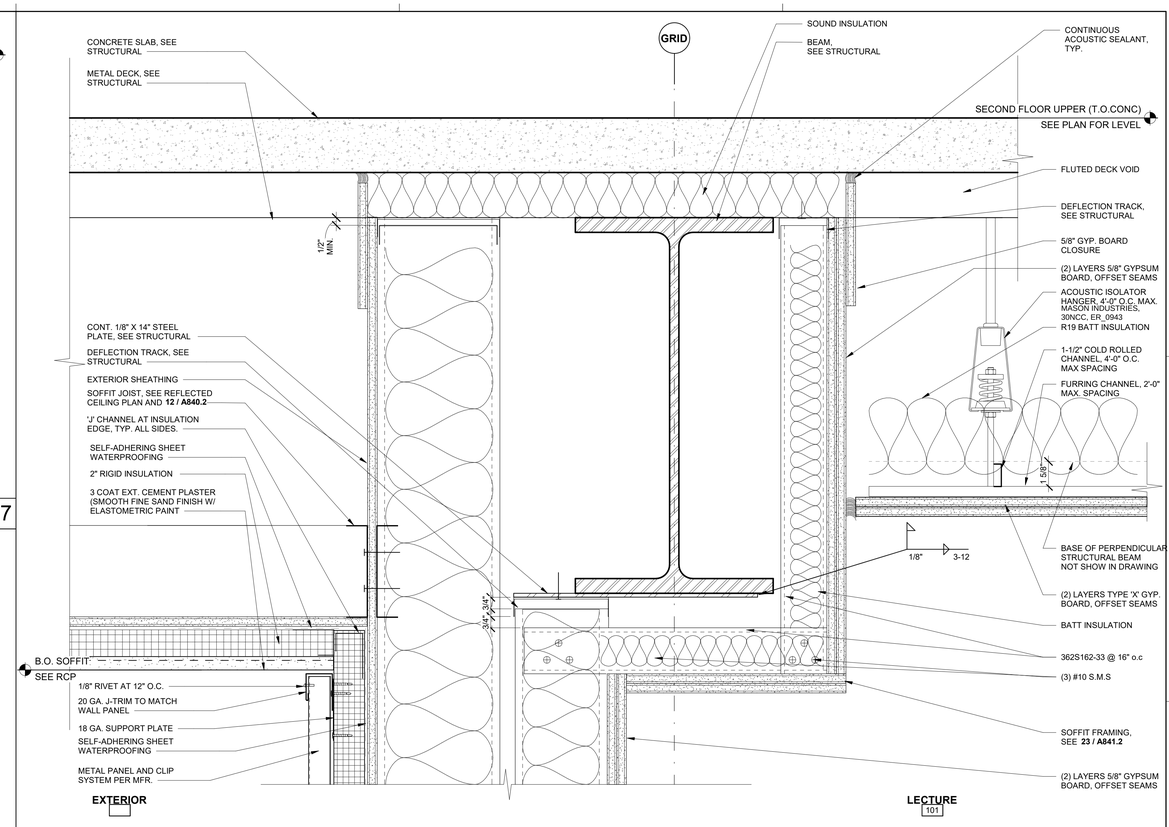

BEAM ENCLOSURE AT EXTERIOR WALL 3" = 1'-0" 3

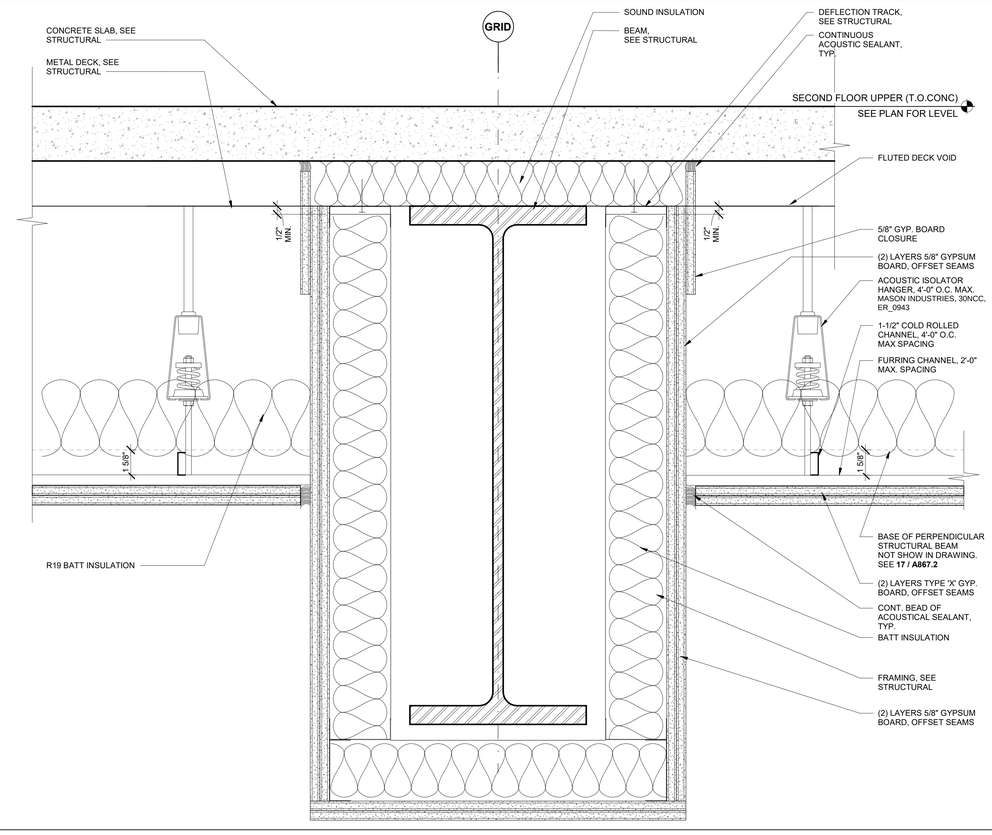

ACOUSTIC BEAM WRAP 3" = 1'-0" 5

PLOT DATE: 11/10/2025 9:09:37 AM

IDENTIFICATION STAMP
DIV. OF THE STATE ARCHITECT
APP: 02-122821 INC: 2
REVIEWED FOR
SS ☑ FLS ☑ ACS ☑
DATE: 11/20/2025

Teter, Inc. expressly reserves its common law copyright and other property rights in these plans. This document, the ideas and designs incorporated herein, as an instrument of professional service, is not to be used in whole or in part, for any other project without prior written authorization.

MARK	DATE	DESCRIPTION
A	11/13/2025	DSA BACKCHECK

LICENSED ARCHITECT REGISTERED PROFESSIONAL ENGINEER STATE OF CALIFORNIA

TETER, INC.
FRESNO HEADQUARTERS
VISALIA | BAKERSFIELD | MODESTO | SAN LUIS OBISPO
ARCHITECTS ENGINEERS CONNECTED

TETER

VISALIA CAMPUS UNIVERSITY CENTER
COLLEGE OF THE SEQUOIAS - INCREMENT 2
915 S. MOONEY BLVD
VISALIA, CALIFORNIA

DRAWING TITLE
ACOUSTIC DETAILS

PROJECT NO.
22-12498

DRAWING
A867.2

\\tet-file1\Users\tara.chong_TETR\Documents\12498-A-UC_tara.chong.rvt

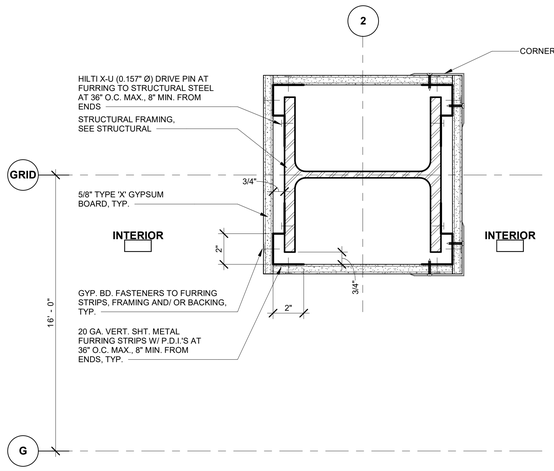

COLUMN FURRING AT VESTIBULE

3" = 1'-0" | 22

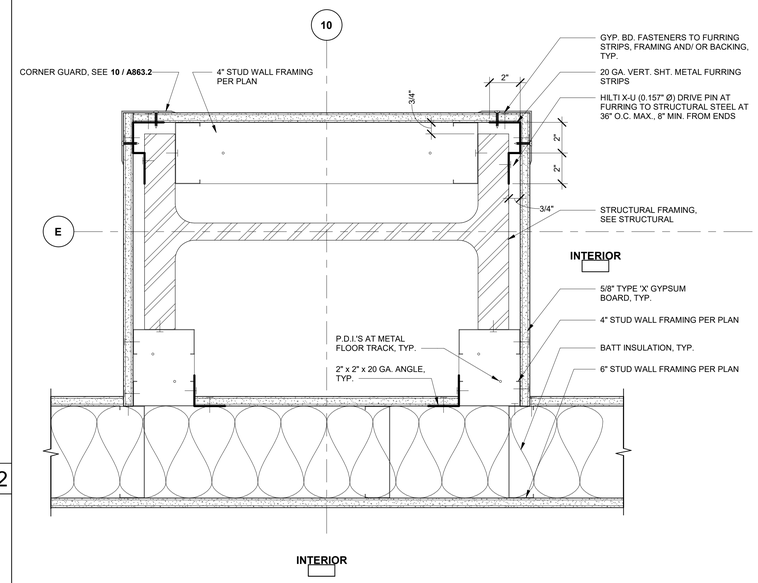

COLUMN FURRING AT PROGRAM OFFICE

3" = 1'-0" | 12

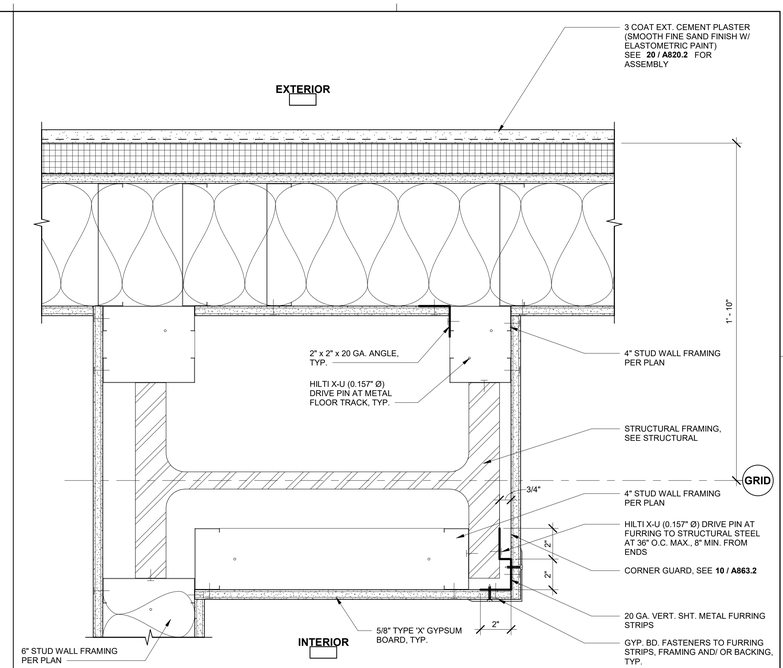

COLUMN FURRING AT JAN.

3" = 1'-0" | 2

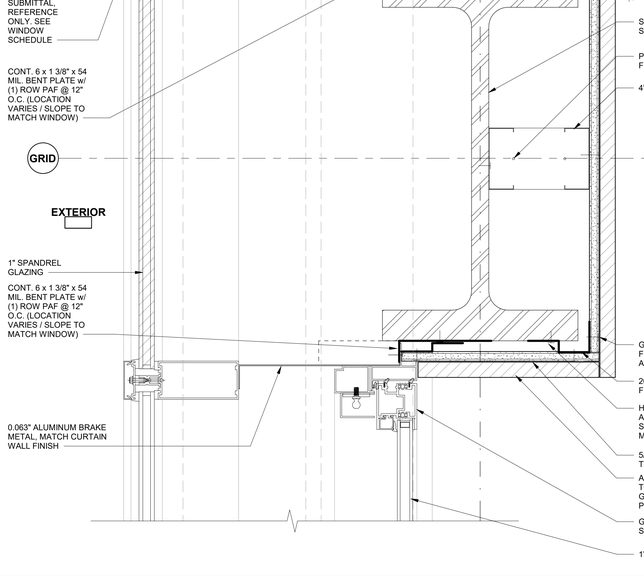

COLUMN FURRING AT CURTAIN WALL

3" = 1'-0" | 24

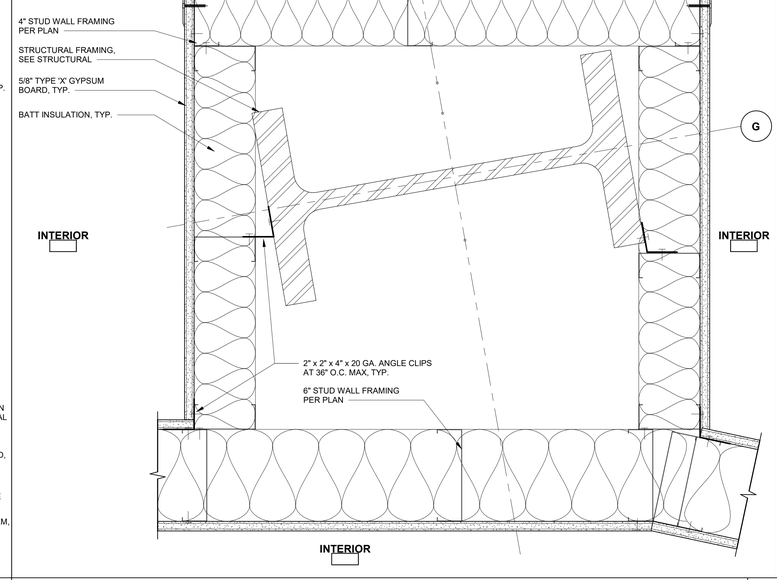

COLUMN FURRING AT ENTRY VESTIBULE

3" = 1'-0" | 14

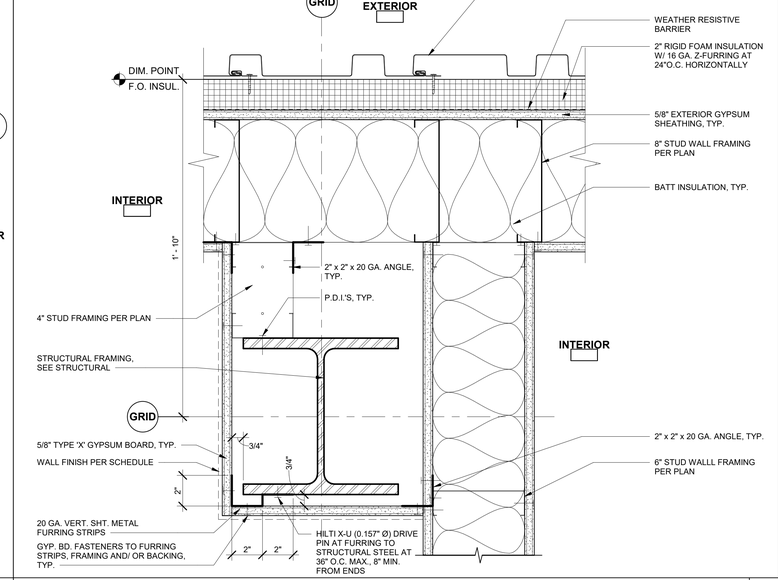

COLUMN FURRING AT WOMEN RESTROOM

3" = 1'-0" | 4

IDENTIFICATION STAMP
DIV. OF THE STATE ARCHITECT
APP: 02-122821 INC: 2
REVIEWED FOR
SS ☑ FLS ☑ ACS ☑
DATE: 11/20/2025

Teter, Inc. expressly reserves its common law copyright and other property rights in these plans. This document, the ideas and designs incorporated herein, as an instrument of professional service, is not to be used in whole or part, for any other project without prior written authorization.

MARK	DATE	DESCRIPTION
A.	11/13/2025	DSA BACKCHECK

TETER, INC.
ARCHITECTS ENGINEERS CONNECTED
FRESNO HEADQUARTERS I MODESTO I SAN LUIS OBISPO
VISALIA I BAKERSFIELD I MODESTO I SAN LUIS OBISPO

VISALIA CAMPUS UNIVERSITY CENTER
COLLEGE OF THE SEQUOIAS - INCREMENT 2
915 S. MOONEY BLVD
VISALIA, CALIFORNIA

DRAWING TITLE
COLUMN FURRING DETAILS

PROJECT NO.
22-12498

DRAWING
A868.2

PLOT DATE: 11/10/2025 9:09:44 AM

\\tet-file1\Users\tara.chong_TETR\Documents\12498-A-UC_tara.chong.rvt

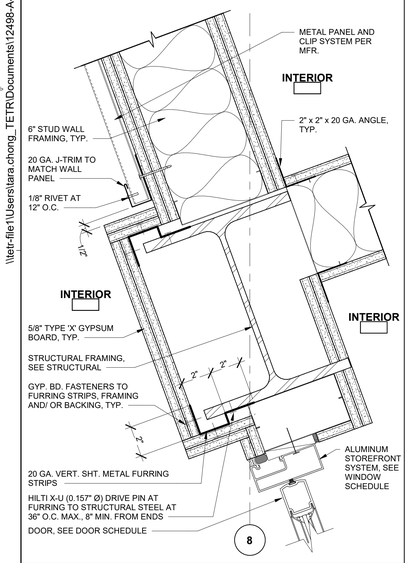

COLUMN FURRING AT CORRIDOR 2F 3" = 1'-0" 27

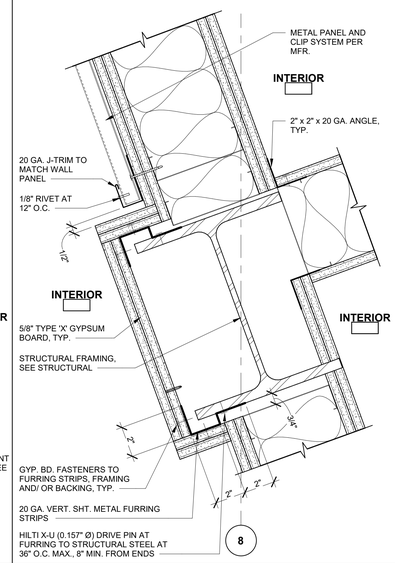

COLUMN FURRING AT CORRIDOR 1F 3" = 1'-0" 22

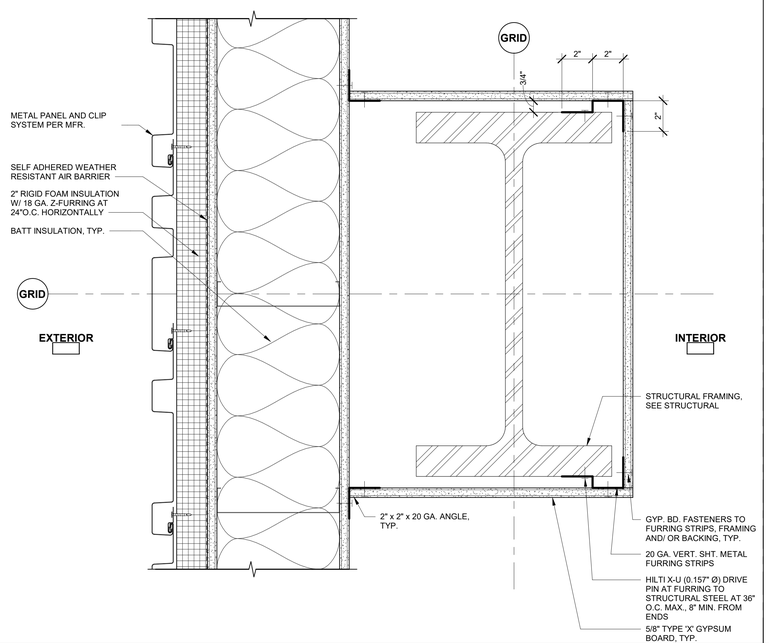

COLUMN FURRING AT STORAGE 3" = 1'-0" 12

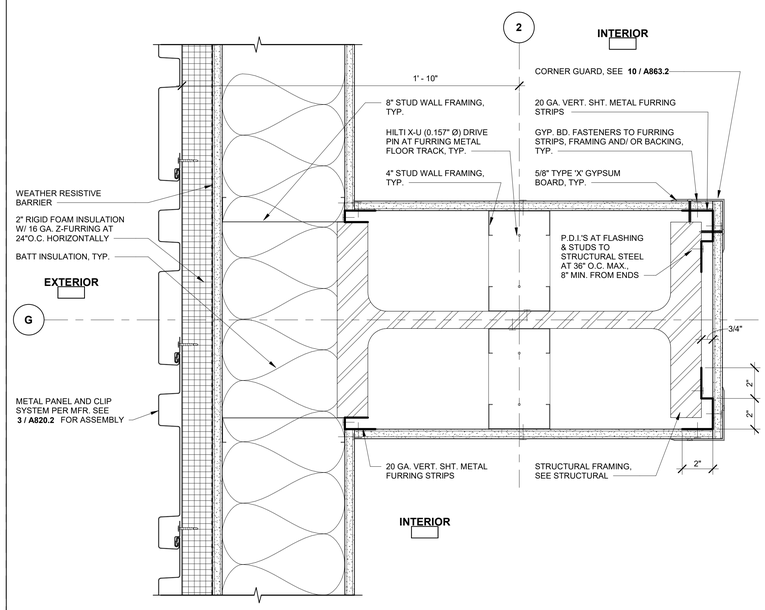

COLUMN FURRING AT EXT. WALL AT VESTIBULE 3" = 1'-0" 2

COLUMN FURRING AT MEETING ROOM 3" = 1'-0" 25

COLUMN FURRING AT UNISEX RESTROOM 3" = 1'-0" 14

COLUMN FURRING AT CLASSROOM 3" = 1'-0" 4

IDENTIFICATION STAMP
DIV. OF THE STATE ARCHITECT
APP: 02-122821 INC: 2
REVIEWED FOR
SS ☑ FLS ☑ ACS ☑
DATE: 11/20/2025

Teter, Inc. expressly reserves its common law copyright and other property rights in these plans. This document, the ideas and designs incorporated herein, as an instrument of professional service, is not to be used in whole or in part, for any other project without prior written authorization.

MARK	DATE	DESCRIPTION
A	11/13/2025	DSA BACKCHECK

TETER, INC.
ARCHITECTS ENGINEERS CONNECTED
FRESNO HEADQUARTERS
VISALIA | BAKERSFIELD | MODESTO | SAN LUIS OBISPO

VISALIA CAMPUS UNIVERSITY CENTER
COLLEGE OF THE SEQUOIAS - INCREMENT 2
915 S. MOONEY BLVD
VISALIA, CALIFORNIA

DRAWING TITLE
COLUMN FURRING DETAILS

PROJECT NO.
22-12498

DRAWING
A869.2

PLOT DATE: 11/10/2025 9:09:52 AM

UL/cUL SYSTEM NO. HW-D-0042

TOP OF WALL JOINT : GYPSUM WALL ASSEMBLY

ASSEMBLY RATING = 1-HR. OR 2-HR.

CLASS II MOVEMENT CAPABILITIES - 50% COMPRESSION OR EXTENSION

L-RATING AT AMBIENT = LESS THAN 1 CFM / LIN FT

L-RATING AT 400°F = LESS THAN 1 CFM / LIN FT

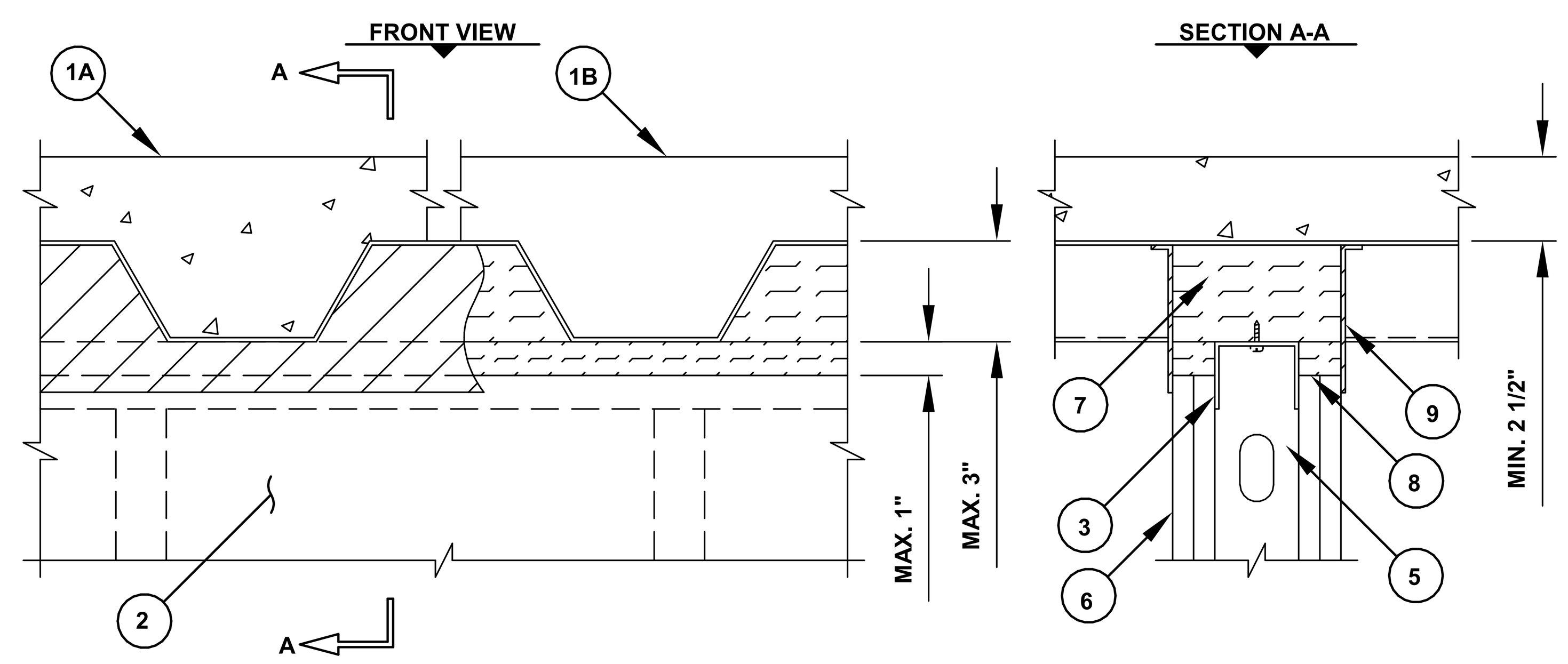

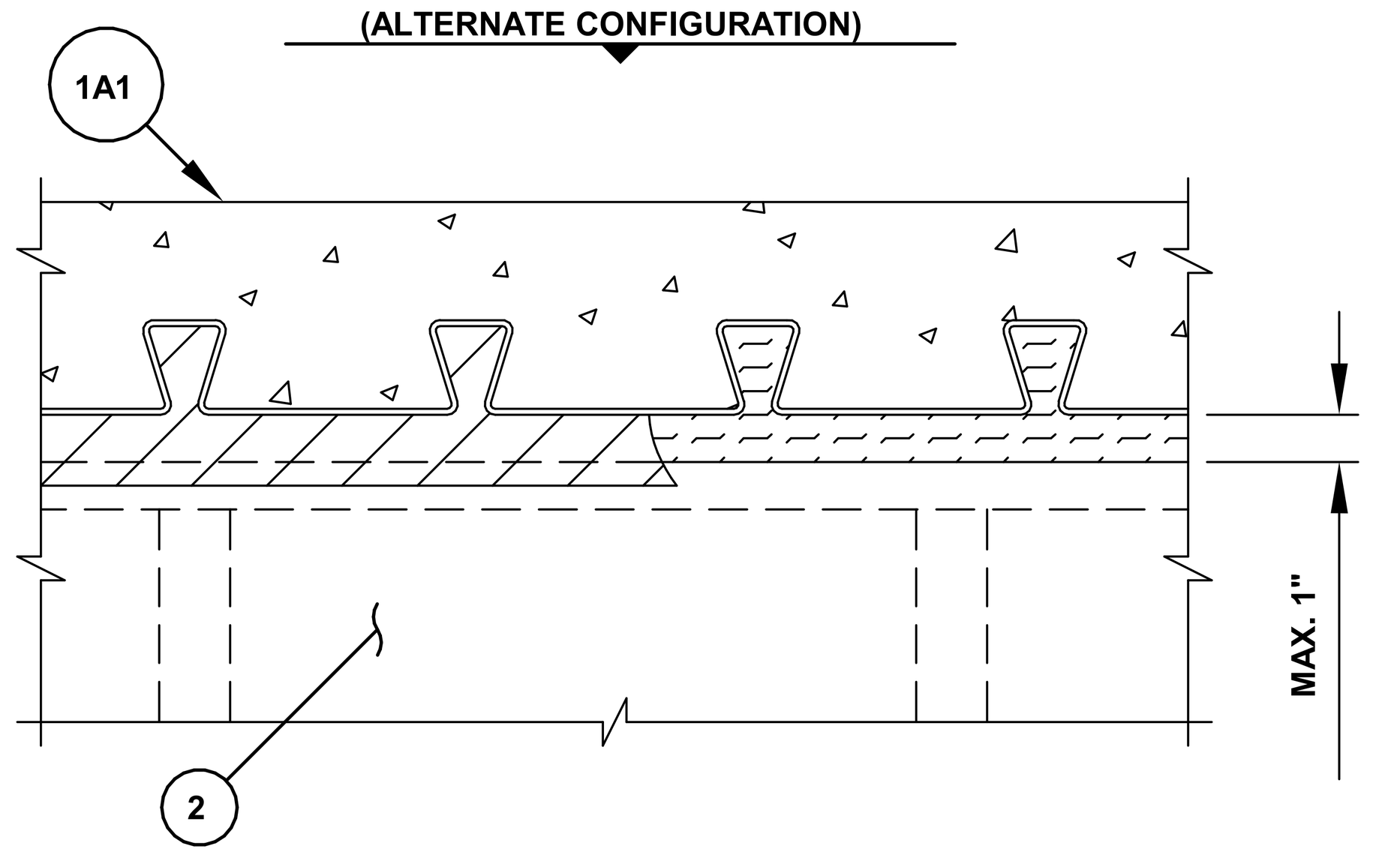

1. FLOOR OR ROOF ASSEMBLY (1-HR. OR 2-HR. FIRE-RATING) :

A. LIGHTWEIGHT OR NORMAL WEIGHT CONCRETE FLOOR (MIN. 2-1/2" THICK) OVER METAL DECKING (UL/cUL CLASSIFIED D700 OR D900 SERIES).
A1. REINFORCED CONCRETE (MIN. 2-1/2" THICK) OVER COMPOSITE METAL DECK (MAX. 2-1/2" DEEP FLUTES) (BY EPIC METALS).
A2. REINFORCED CONCRETE (MIN. 2-1/2" THICK) OVER COMPOSITE METAL DECK (MAX. 2" DEEP FLUTES VERSA-DEK®) (BY NEW MILLENNIUM BUILDING SYSTEMS).
B. INSULATING CONCRETE (MIN. 2-1/2" THICK) OVER METAL DECKING (UL/cUL CLASSIFIED P900 SERIES).
C. [NOT SHOWN] FLUTED STEEL ROOF DECK (UL/cUL CLASSIFIED P700 OR P900 SERIES).

2. GYPSUM WALL ASSEMBLY (UL/cUL CLASSIFIED U400 OR V400 SERIES) (1-HR. OR 2-HR. FIRE-RATING).

3. CEILING RUNNER (MIN. 25 GA., FLANGE HEIGHT OF CEILING RUNNER SHALL BE MINIMUM 1/4" GREATER THAN MAXIMUM EXTENDED JOINT WIDTH) FASTENED TO UNDERSIDE OF DECK WITH STEEL MASONRY ANCHORS, STEEL FASTENERS, OR WELDS (SPACED MAX. 24" O.C.) (SEE NOTE NO. 4 BELOW).

4. [OPTIONAL - NOT SHOWN] WHEN SPRAY-APPLIED FIREPROOFING IS USED, CEILING RUNNER MAY BE SECURED TO DECK WITH Z-SHAPED CLIPS (MIN. 20 GA.) WITH THE FOLLOWING DIMENSIONS : MINIMUM 1" LONG, BUT NOT EXCEEDING THE WIDTH OF THE WALL, BY 1-1/2" OR 2" LONG UPPER AND LOWER LEGS. SUPPORT CLIPS SPACED MAXIMUM 24" OC.

5. STEEL STUDS (MIN. 2-1/2" WIDE), CUT 1/2" TO 3/4" LESS IN LENGTH THAN ASSEMBLY HEIGHT, NESTING IN CEILING RUNNER WITHOUT ATTACHMENT.

6. 5/8" OR 1-1/4" THICKNESS GYPSUM WALLBOARD AS SPECIFIED IN THE INDIVIDUAL UL DESIGN. TOP ROW OF SCREWS SHALL BE INSTALLED INTO STUDS 1-1/2" TO 2" BELOW THE BOTTOM OF THE CEILING RUNNER.

7. HILTI CP 777 SPEED PLUGS FRICTION FITTED TO COMPLETELY FILL FLUTE FLUSH WITH BOTH SIDES OF WALL (SEE NOTES NO. 5 AND 6 BELOW).

8. HILTI CP 767 SPEED STRIPS OR MINERAL WOOL SAFING (MIN. 4 PCF DENSITY) COMPRESSED 50% AND INSERTED INTO JOINT, FLUSH WITH BOTH SIDES OF WALL.

9. MINIMUM 1/8" (WET) THICKNESS HILTI CFS-SP WB FIRESTOP JOINT SPRAY TO COMPLETELY COVER MINERAL WOOL AND TO OVERLAP A MINIMUM 1/2" ONTO GYPSUM WALL AND METAL DECK, ON BOTH SIDES OF GYPSUM WALL ASSEMBLY.

NOTES : 1. MAXIMUM WIDTH OF JOINT = 1".

2. STEEL FLOOR UNITS MAY BE SPRAYED WITH A MINIMUM 5/16" TO MAXIMUM 1-3/4" THICKNESS OF UL CLASSIFIED MONOKOTE TYPE MK-6/HY (MANUFACTURED BY W.R. GRACE) OR CAFCO TYPE 300 (MANUFACTURED BY ISOLATEK, INT.) FIREPROOFING, PRIOR TO OR AFTER INSTALLATION OF CEILING RUNNERS.

3. WHEN THE STEEL DECK IS COATED WITH FIREPROOFING, HILTI FIRESTOP JOINT SPRAY SHALL OVERLAP THE WALL A MINIMUM 1/2" AND OVERLAP THE FIREPROOFING A MINIMUM 2" ON BOTH SIDES OF GYPSUM WALL ASSEMBLY.

4. AS AN ALTERNATE TO CEILING RUNNER IN ITEM NO. 3, SLOTTED CEILING RUNNERS MAY BE USED. CONSULT THE UL FIRE RESISTANCE DIRECTORY FOR APPROVED MANUFACTURERS.

5. AS AN ALTERNATE TO HILTI CP 777 SPEED PLUGS, MINERAL WOOL SAFING (MIN. 4 PCFDENSITY) COMPRESSED 25% MAY BE USED. ALTERNATELY, MINERAL WOOL SAFING (MIN. 4PCF DENSITY) CUT TO THE SHAPE OF FLUTE AND NOMINAL 1" LONGER THAN THICKNESS OF WALL, COMPRESSED FROM ENDS (APP. 14%) AND PACKED FLUSH WITH WALL SURFACE.

6. WHEN EPIC METALS DECK IS USED, MINERAL WOOL IS TO BE TIGHTLY PACKED INTO THE INVERTED FLUTES, FLUSH WITH BOTH SIDES OF WALL. ADDITIONALLY, WHEN EPIC METALS "TORIS C" DECK IS USED MINERAL WOOL IS TO BE COMPRESSED 25% TO FILL RECESSED INDENTATION ABOVE CEILING RUNNER.

TOP OF WALL FIRE RATED SYSTEM — N.T.S. 19

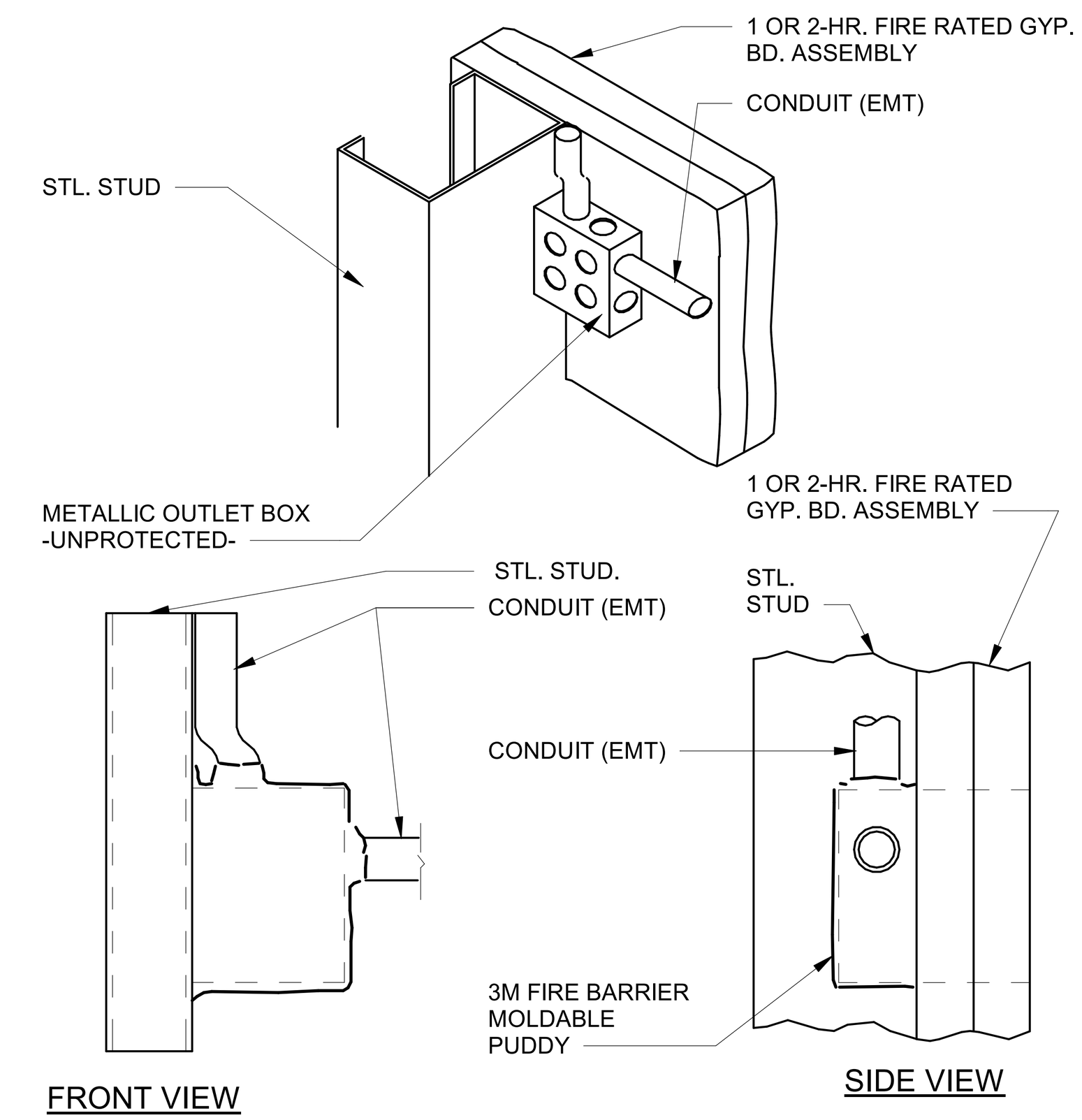

SYSTEM DETAILS
1. DRAWING NO.: 5300 ICG85.01. UL TEST REPORT NO. R9700.89NK19575
2. SYSTEM JUSTIFICATION: UL TEST REPORT R9700, 89NK19575 (11/9/89) & R9700 9INK21798 (10/10/91). TESTS CONDUCTED IN ACCORDANCE W/ THE STANDARD FIRE TESTS OF BLDG. CONSTRUCTION & MATERIALS, ANSI/UL 263 (ASTM E 119, NFPA 251).
3. ASSEMBLY: 1 OR 2-HR. FIRE RATED GYP. BOARD/STUD WALL. WALL FRAMING MAY CONSIST OF EITHER WOOD STUDS OR STEEL CHANNEL STUDS- 1 HR. RATING OR STEEL CHANNEL STUDS- 2-HR. RATING.
4. RATINGS: 1-HR. OR 2-HR.
5. ITEM TO BE PROTECTED: METALLIC OUTLET BOX- UP TO 45. NOTE: THIS APPLICATION IS INTENDED TO PREVENT FLAME THROUGH & SMOKE PROPAGATION BY SEALING "KNOCK-OUTS" & OPENINGS IN THE BOX/ASSEMBLY. IT ALSO INHIBITS HEAT TRANSFER TO THE NON-FIRESIDE SURFACE OF THE WALL.

APPLICATION DETAILS
1. APPLY A LAYER OF 3M FIRE BARRIER MOLDABLE PUTTY PAD TO THE METALLIC OUTLET BOX, COVERING ALL EXPOSED SURFACES. NOM. PUTTY THICKNESS IS 1/8 IN. (MPPI =4"x8"x1/8", MPP - 4S = 6"x7"x1/8")
2. PRESS THE PUTTY INTO THE INTERFACE PERIMETER OF THE OUTLET BOX & THE STUD & ALSO THE INTERFACE OF THE OUTLET BOX & THE GYP. BD.
3. SEAL ANY "KNOCK-OUT" HOE CONTAINING WIRE OR CONDUIT w/A GENEROUS AMOUNT OF MOLDABLE PUTTY.

ELECTRICAL MEMBRANE SEAL FOR METALLIC J-BOXES IN 1HR RATED WALLS — N.T.S. 12

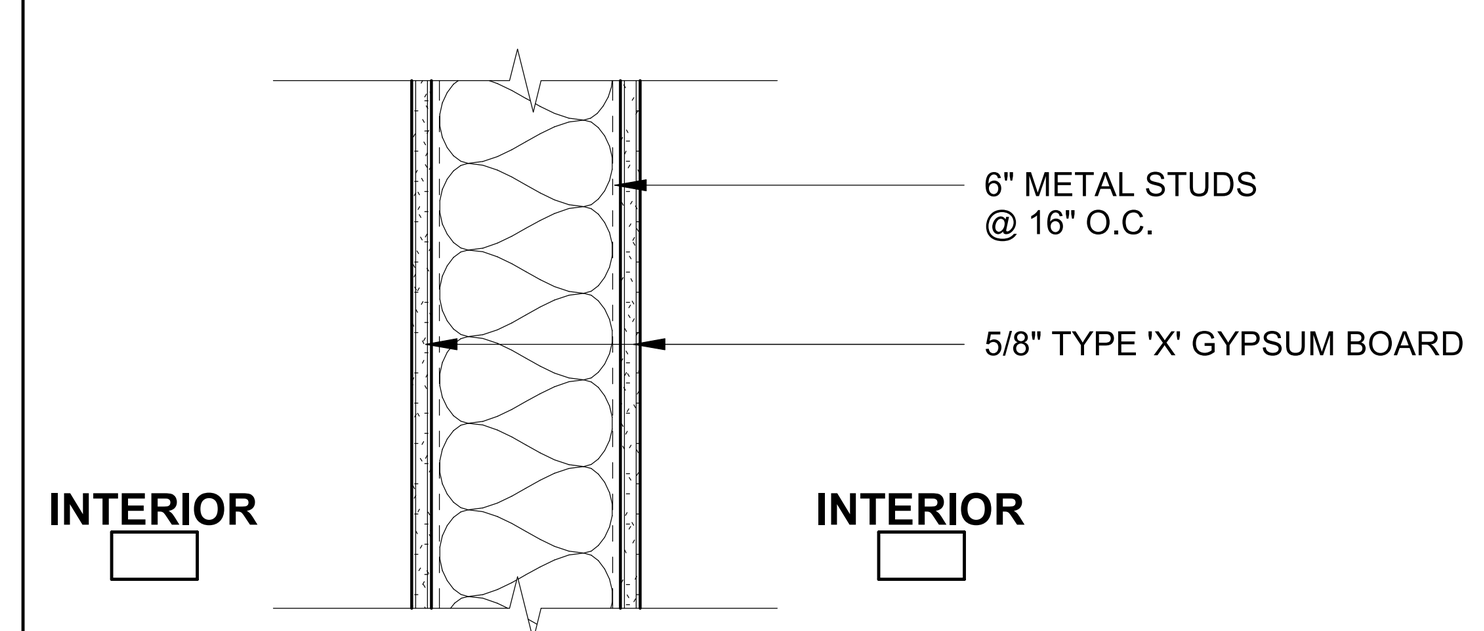

PER C.B.C 2022 TABLE 721.1(2), ITEM 13-1.1

MIN. 25 GA. STEEL STUDS @ 16" ON CENTER WITH ONE FULL-LENGTH LAYER OF 5/8" TYPE 'X' GYPSUM WALLBOARD APPLIED VERTICALLY WITH 1" #6 DRYWALL SCREWS TO EACH STUD. SCREWS ARE 8" O.C. AROUND THE PERIMETER AND 12" O.C. ON THE INTERMEDIATE STUD. WHERE APPLIED HORIZONTALLY, THE TYPE 'X' GYPSUM WALLBOARD SHALL BE ATTACHED TO STUDS AND THE HORIZONTAL JOINTS SHALL BE STAGGERED WITH THOSE ON THE OPPOSITE SIDE. SCREWS FOR THE HORIZONTAL APPLICATION SHALL BE 8" ON CENTER AT VERTICAL EDGES AND 12" ON CENTER AT INTERMEDIATE STUDS.

1 HR FIRE RATED WALL ASSEMBLY - WALL — 1 1/2" = 1'-0" 13

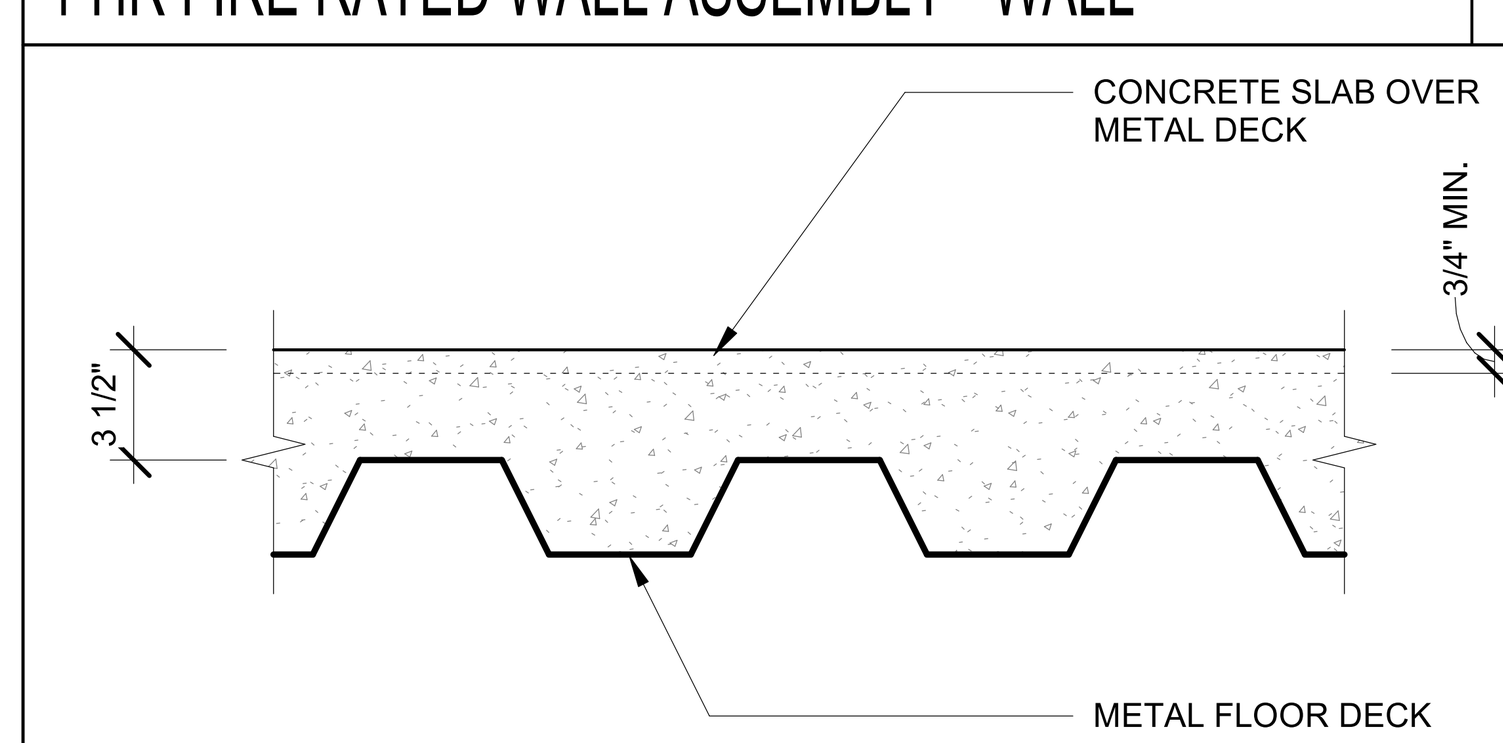

PER C.B.C 2022 TABLE 721.1(3), ITEM 1-1.1

SLAB (CEILING NOT REQUIRED). MINIMUM COVER OVER NONPRESTRESSED REINFORCEMENT SHALL NOT BE LESS THAN 3/4"

THICKNESS OF FLOOR OR ROOF SLAB (INCHES)
1 HOUR = 3.5

DESIGN MEETS REQUIREMENTS OF UL 263 FOR 1 HR RATED CONCRETE FLOOR SLAB. FOR ADDITIONAL INFORMATION, SEE **5 / A872.2**

RATED FLOOR ASSEMBLY - 1 HR — N.T.S. 14

Through-penetration Firestop Systems

System No. W-L-7059
March 02, 2001
F Ratings - 1 and 2 HR.
T Ratings - 1/2 and 3/4 HR.

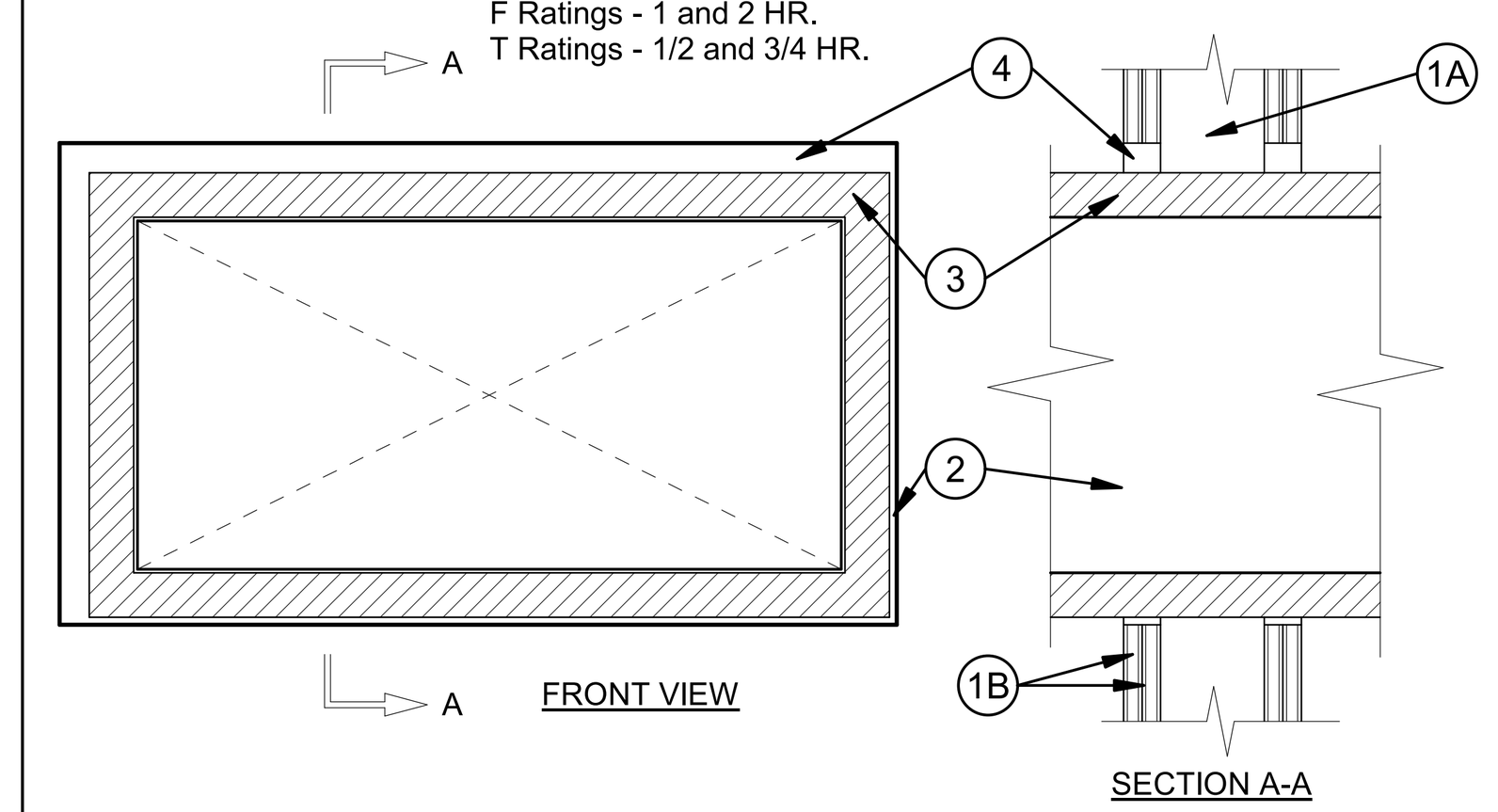

1. WALL ASSEMBLY - THE 1 OR 2 FIRE-RATED GYPSUM WALLBOARD/STUD WALL ASSEMBLY SHALL BE CONSTRUCTED OF THE MATERIALS AND IN THE MANNER DESCRIBED IN THE INDIVIDUAL U400 SERIES WALL OR PARTITION DESIGN IN THE UL FIRE RESISTANCE DIRECTORY AND SHALL INCLUDE THE FOLLOWING CONSTRUCTION FEATURES:
   A. STUDS - WALL FRAMING SHALL CONSIST OF CHANNEL STUDS. STEEL STUDS TO BE MIN. 2-1/2 IN. WIDE AND SPACED MAX. 24 IN. O.C. THE OPENING IN THE WALL TO ACCOMMODATE THE STEEL DUCT (ITEM 2) SHALL BE FRAMED ON ALL SIDES USING LENGTHS OF STUDS INSTALLED BETWEEN THE VERTICAL STUDS AND ATTACHED TO THE STUDS AT EACH END. THE FRAMED OPENING IN THE WALL SHALL BE A NOM 6 IN. WIDE AND 12 IN. OR HIGHER THAN THE WIDTH AND HEIGHT OF THE STEEL DUCT.
   B. WALLBOARD, GYPSUM* - 5/8 IN. THICK, 4 FT WIDE WITH SQUARE OR TAPERED EDGES. THE GYPSUM WALLBOARD TYPE, THICKNESS, NUMBER OF LAYERS, FASTENER TYPE AND SHEET ORIENTATION SHALL BE AS SPECIFIED IN THE INDIVIDUAL U300 OR U400 SERIES DESIGN IN THE UL FIRE RESISTANCE DIRECTORY. MAX. AREA OF OPENING IS 395 SQ. IN. WITH MAX DIMENSIONS OF 26-3/4 IN. FOR STEEL STUDS.
2. STEEL DUCT - NOM 24 IN. BY 12 IN. (OR SMALLER) 24 GAUGE (OR HEAVIER) STEEL DUCT TO BE INSTALLED ECCENTRICALLY WITHIN THE FRAMED OPENING. THE ANNULAR SPACE SHALL BE MIN. 1 IN. TO MAX. 1-3/4 IN. STEEL DUCT TO BE RIGIDLY SUPPORTED ON BOTH SIDES OF THE WALL ASSEMBLY.
3. BATT AND BLANKET* - MAX. 1-1/2 THICK GLASS FIBER BATT OR BLANKET (MIN. 3.4 pcf) JACKETED ON THE OUTSIDE WITH A FOIL-SCRIM-KRAFT FACING. LONGITUDINAL AND TRANSVERSE JOINTS SEALED WITH ALUMINUM FOIL TAPE. DURING THE INSTALLATION OF THE FILL MATERIAL, THE BATT OR BLANKET SHALL BE COMPRESSED 50% SUCH THAT THE ANNULAR SPACE WITHIN THE FIRESTOP SYSTEM SHALL BE MIN. 1/4 IN. TO MAX. 1 IN. SEE BATTS AND BLANKETS - (BKNV) CATEGORY IN THE BUILDING MATERIALS DIRECTORY FOR NAMES MANUFACTURERS. ANY BATT OR BLANKET MEETING THE ABOVE SPECIFICATIONS AND BEARING THE UL CLASSIFICATION MARKING WITH A FLAME SPREAD INDEX OF 25 OR LESS AND A SMOKE DEVELOPED INDEX 50 OR LESS MAY BE USED.
4. FILL, VOID OR CAVITY MATERIAL* - SEALANT MIN. 5/8 IN. OR 1-1/4 IN. THICKNESS OR FILL MATERIAL APPLIED WITHIN THE ANNULUS, FLUSH WITH BOTH SURFACES OF WALL FOR 1 OR 2 HR. WALLS, RESPECTIVELY. IF VOIDS DEVELOPS AFTER THE FILL MATERIAL CURES, THE VOIDS SHALL BE SEALED WITH ADDITIONAL FILL MATERIAL.

HILTI CONSTRUCTION CHEMICALS, DIV OF HILTI INC - FS-ONE SEALANT

*Bearing the UL Classification Mark

DUCT RATED HVAC (INSULATED) — N.T.S. 7

Through-penetration Firestop Systems

System No. W-L-7040
August 27, 2010
F Ratings - 1 and 2 HRS. (See Items 1 and 3)
T Ratings - 0 HR.
L Rating at Ambient - Less Than 1 CFM/ sq. ft.
L Rating at 400 F - Less Than 1 CFM/ sq. ft.

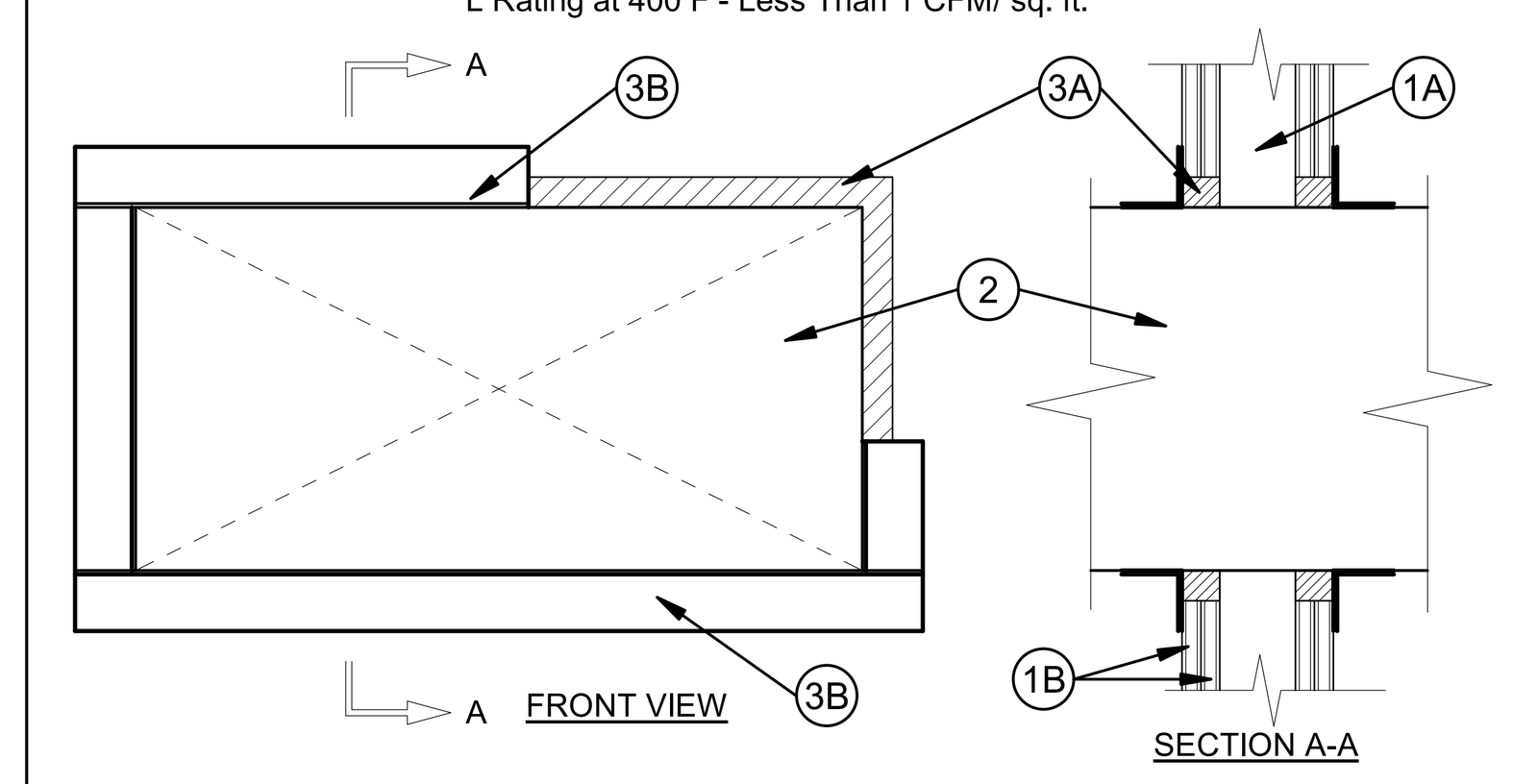

1. WALL ASSEMBLY - THE FIRE-RATED GYPSUM WALLBOARD/STUD WALL ASSEMBLY SHALL BE CONSTRUCTED OF THE MATERIALS AND IN THE MANNER SPECIFIED IN THE INDIVIDUAL U300 OR U400 SERIES WALL AND PARTITION DESIGNS IN THE FIRE RESISTANCE DIRECTORY AND SHALL INCLUDE THE FOLLOWING CONSTRUCTION FEATURES:
   A. STUDS - WALL FRAMING MAY CONSIST OF EITHER WOOD STUDS OR STEEL CHANNEL STUDS. WOOD STUDS TO CONSIST OF NOM. 2 BY 4 IN. LUMBER SPACED 16 IN. O.C. STEEL STUDS TO BE MIN. 2-1/2 IN. WIDE AND SPACED MAX. 24 IN. ADDITIONAL FRAMING MEMBERS SHALL BE USED TO COMPLETELY FRAME AROUND OPENING.
   B. GYPSUM BOARD* - NOM. 5/8 IN. THICK WITH SQUARE OR TAPERED EDGES. THE GYPSUM WALLBOARD TYPE, NUMBER OF LAYERS AND SHEET ORIENTATION SHALL BE AS SPECIFIED IN THE INDIVIDUAL WALL AND PARTITION DESIGN NUMBER. MAX. AREA OF OPENING IS 1300 IN. WITH THE DIMENSION OF 50 IN. THE HOURLY F RATING OF THE FIRESTOP SYSTEM IS EQUAL TO THE HOURLY FIRE RATING OF THE WALL ASSEMBLY IN WHICH IT IS INSTALLED.
2. STEEL DUCT - NOM. 24 IN. BY 48 IN. (OR SMALLER) NO. 24 GAUGE (OR HEAVIER) GALV. STEEL DUCT TO BE INSTALLED WITHIN THE FIRESTOP SYSTEM. THE ANNULAR SPACE SHALL BE MIN. 0 IN. (POINT CONTACT0 TO A MAX. 2 IN. DUCT TO BE RIGIDLY SUPPORTED ON BOTH SIDES OF THE WALL ASSEMBLY.
3. FIRESTOP SYSTEM - THE FIRESTOP SYSTEM SHALL CONSIST OF THE FOLLOWING:
   A. FILL, VOID OR CAVITY MATERIAL* - SEALANT - MIN. 5/8 IN. THICKNESS OF FILL MATERIAL APPLIED WITHIN ANNULUS FLUSH WITH BOTH SURFACES OF WALL. AT POINT CONTACT LOCATION, A MIN. 1/2 IN. DIA. BEAD OF FILL MATERIAL SHALL BE APPLIED TO THE WALL/DUCT INTERFACE ON BOTH SURFACES OF WALL. HILTI CONSTRUCTION CHEMICALS, DIV OF HILTI, INC. - FS-ONE SEALANT, CP601S ELASTOMERIC FIRESTOP SEALANT OR CP606 FLEXIBLE SEALANT.
   B. STEEL RETAINING ANGLE - NO. 18 MSG (0.048 IN.) GALV. STEEL ANGLES CUT TO FIT CONTOUR OF DUCT WITH A 2 IN. OVERLAP ON THE DUCT AND A MIN. 1 IN. OVERLAP ON THE GYPSUM BOARD ASSEMBLY ON BOTH SURFACES OF WALL. 2 IN. LEG OF ANGLE SECURED TO DUCT WITH MIN. NO. 8 BY 3/4 IN. LONG SHEET METAL SCREWS, SPACED A MAX. OF 6 IN. O.C. WHEN BEAD OF FILL MATERIAL IS USED AT JOINT CONTACT LOCATIONS, ANGLES SHALL BE INSTALLED PRIOR TO FULL MATERIAL CURING.

*Bearing the UL Classification Mark

DUCT RATED HVAC (UNINSULATED) — N.T.S. 2

Through-penetration Firestop Systems

System No. W-L-5096
March 30, 2015

ANSI/UL 1479 (ASTM E814)	CAN/ULC S115
F Ratings - 1 and 2 Hr. (See Item 1)	F Ratings - 1 and 2 Hr. (See Item 1)
T Ratings - 0, 1/2 and 1 Hr. (See Items 3 and 4)	FT Ratings - 0, 1/2 and 1 Hr. (See Items 3 and 4)
	FH Ratings - 1 and 2 Hr. (See Item 1)
	FTH Ratings - 0, 1/2 and 1 hr. (See Items 3 and 4)

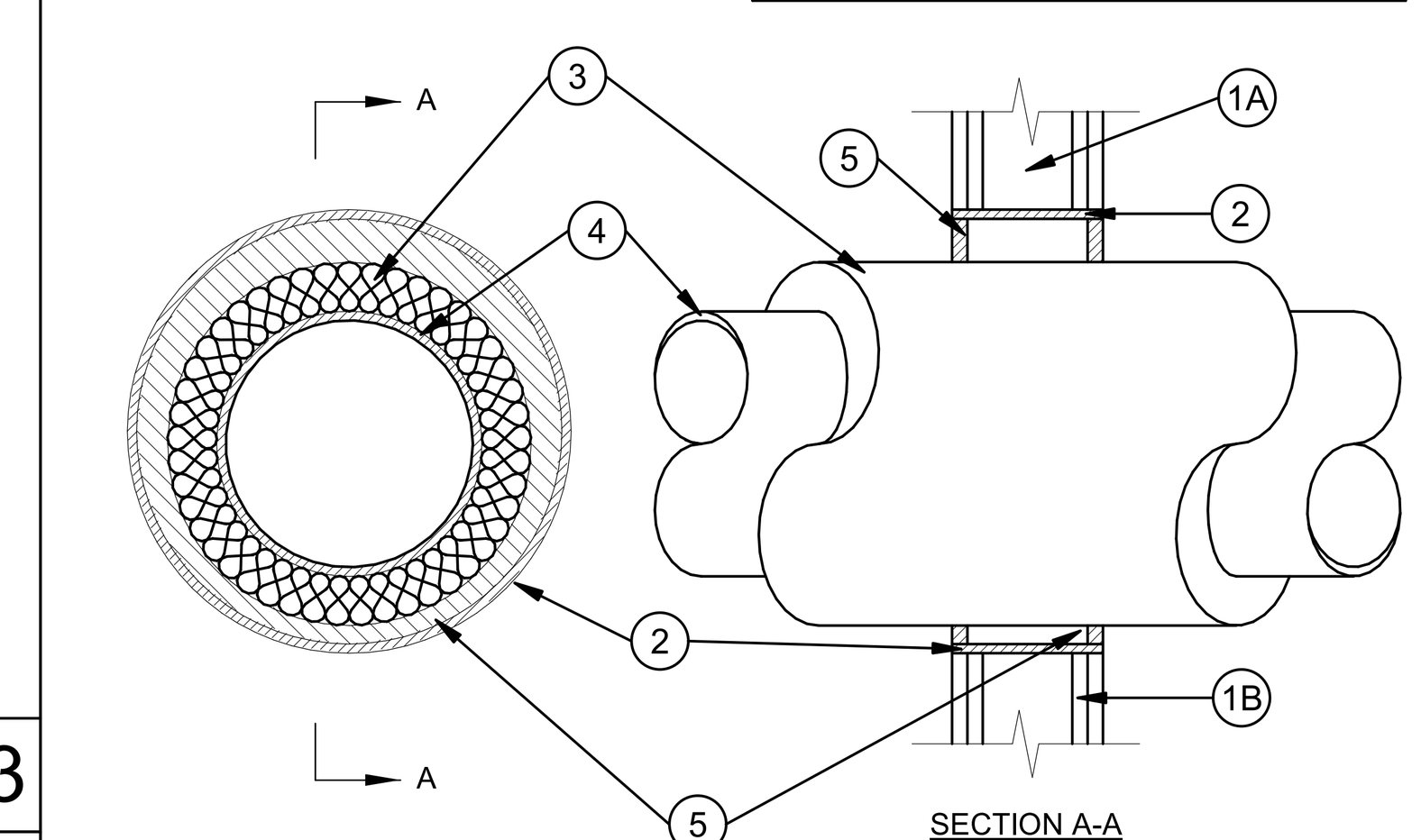

1. WALL ASSEMBLY THE 1 OR 2 HR FIRE RATED WALLBOARD/STUD WALL ASSEMBLY SHALL BE CONSTRUCTED OF THE MATERIALS AND IN THE MANNER SPECIFIED IN THE INDIVIDUAL U300, U400, V400 OR W400 SERIES WALL AND PARTITION DESIGNS IN THE UL FIRE RESISTANCE DIRECTORY AND SHALL INCLUDE THE FOLLOWING CONSTRUCTION FEATURES:
   A. STUDS - WALL FRAMING SHALL CONSIST OF EITHER WOOD STUDS OR STEEL CHANNEL STUDS. WOOD STUDS TO CONSIST OF NOM 2 BY 4 IN. (51 BY 102 mm) LUMBER SPACED 16 IN. (406 mm) O.C. STEEL STUDS TO BE MIN 2-1/2 IN. (64 mm) WIDE AND SPACED MAX. 24 IN. (610 mm) O.C.
   B. GYPSUM BOARD* - NOM 5/8 IN. (16 mm) THICK, 4 FT (1.2 m) WIDE WITH SQUARE OR TAPERED EDGES. THE GYPSUM BOARD TYPE, THICKNESS, NUMBER OF LAYERS, FASTENER TYPE AND SHEET ORIENTATION SHALL BE AS SPECIFIED IN THE INDIVIDUAL U300, U400, V400 OR W400 SERIES DESIGN IN THE FIRE RESISTANCE DIRECTORY. MAX. DIA. OF OPENINGS IS 14-1/2 IN. (368 mm) FOR WOOD STUD WALLS. MAX. DIA. OF OPENING IS 8-5/8 IN. (473 mm) FOR STEEL STUDS WALLS OR SIZED TO THE OUTSIDE DIA. OF STEEL SLEEVE (ITEM 2) WHEN OPTIONAL STEEL SLEEVE IS USED.
   THE HOURLY F AND FH RATINGS OF THE FIRESTOP SYSTEM ARE EQUAL TO THE HOURLY FIRE RATING OF THE WALL ASSEMBLY IN WHICH IT IS INSTALLED.
2. STEEL SLEEVE - (OPTIONAL) MAX. 18 IN. (457 mm) DIA. SCHEDULE 40 (OR HEAVIER) STEEL PIPE SLEEVE INSERTED IN OPENING CORE DRILLED THROUGH WALL. LENGTH OF STEEL SLEEVE TO BE EQUAL TO THICKNESS OF WALL.
3. THROUGH PENETRANT - ONE METALLIC PIPE OR TUBING INSTALLED CONCENTRICALLY OR ECCENTRICALLY WITHIN THE FIRESTOP SYSTEM. PIPE OR TUBE RIGIDLY SUPPORTED ON BOTH SIDES OF WALL ASSEMBLY. THE FOLLOWING TYPES AND SIZES OF METALLIC PIPES OR TUBE MAY BE USED:
   A. STEEL PIPE - NOM 12 IN. (305 mm) DIA. (OR SMALLER) SCHEDULE 40 (OR HEAVIER) STEEL PIPE. WHEN STEEL PIPE IS USED, T, FT AND FTH RATING ARE 1/2 HR AND 1 HR WHEN INSTALLED IN 1 AND 2 HR RATED WALLS, RESPECTIVELY.
   B. COPPER TUBE - NOM 6 IN. (152 mm) DIA. (OR SMALLER) TYPE L (OR HEAVIER) COPPER TUBE. WHEN COPPER TUBE IS USED, T, FT AND FTH RATING ARE 1/2 HR AND 1 HR WHEN INSTALLED IN 1 AND 2 HOUR RATED WALLS, RESPECTIVELY.
   C. COPPER PIPE - NOM 6 IN. (152 mm) DIA. (OR SMALLER) REGULAR (OR HEAVIER) COPPER PIPE. WHEN COPPER PIPE IS USED, T, FT, FTH RATINGS ARE 1/2 AND 1 HR WHEN INSTALLED IN 1 AND 2 HR RATED WALLS RESPECTIVELY.
4. PIPE COVERING* - MAX 2 IN. (51 mm) THICK HOLLOW CYLINDRICAL HEAVY DENSITY (NOM. 3.5 pcf OR 56 kg/m³) GLASS FIBER UNITS, JACKETED ON THE OUTSIDE WITH AN ALL SERVICE JACKET. LONGITUDINAL JOINTS SEALED WITH METAL FASTENERS OR FACTORY-APPLIED SSL TAPE. TRANSVERSE JOINTS SECURED WITH METAL FASTENERS OR WITH BUTT TAPE SUPPLIED WITH THE PRODUCT. THE ANNULAR SPACE BETWEEN INSULATED PENETRANT AND PERIPHERY OF OPENING SHALL BE MIN. 0 IN. (POINT CONTACT) TO MAX 1-7/8 IN. (48 mm). WHEN PIPE COVERING THICKNESS IS LESS THAN 2 IN. (51 mm), T, FT AND FTH RATINGS ARE 0 HR. SEE PIPE AND EQUIPMENT COVERING-MATERIALS (BRGU) CATEGORY IN THE BUILDING MATERIALS DIRECTORY FOR NAMES OF MANUFACTURERS. ANY PIPE COVERING MATERIAL MEETING THE ABOVE SPECIFICATIONS AND BEARING THE UL CLASSIFICATION MARKING WITH A FLAME SPREAD INDEX OF 25 OR LESS AND A SMOKE DEVELOPED INDEX OF 50 OR LESS MAY BE USED.
5. FILL, VOID OR CAVITY MATERIAL *-SEALANT - MIN 5/8 IN. (16 mm) OR THICKNESS OR FILL MATERIAL APPLIED WITHIN ANNULUS, FLUSH WITH BOTH SURFACES OF WALL ASSEMBLY FOR AT POINT CONTACT AN ADDITIONAL 1/2 IN. (13 mm) BEAD OF SEALANT SHALL BE APPLIED TO THE INSULATED PIPE/ WALL INTERFACE.

HILTI CONSTRUCTION CHEMICALS, DIV OF HILTI INC - FS-ONE SEALANT OR FS-ONE MAX. INTUMESCENT SEALANT

*Indicates such products shall bear the UL or cUL Certification Mark for jurisdictions employing the UL or cUL Certification (such as Canada), respectively.

UL PENETRATION RATED METALLIC PIPE/ TUBING (INSULATED) — N.T.S. 10

Through-penetration Firestop Systems

System No. W-L-1054
January 21, 2020

ANSI/UL 1479 (ASTM E814)	CAN/ULC S115
F Ratings - 1 and 2 Hr. (See Items 1 and 3)	F Ratings - 1 and 2 Hr. (See Items 1 and 3)
T Rating - 0 Hr.	FT Rating - 0 Hr.
L Rating at Ambient - Less Than 1 CFM/ sq. ft.	FH Ratings - 1 and 2 Hr. (See Items 1 and 3)
L Rating at 400 F - Less Than 1 CFM/ sq. ft.	FTH Rating - 0 hr.
	L Rating at Ambient - Less Than 1 CFM/ sq. ft.
	L Rating at 400 F - Less Than 1 CFM/ sq. ft.

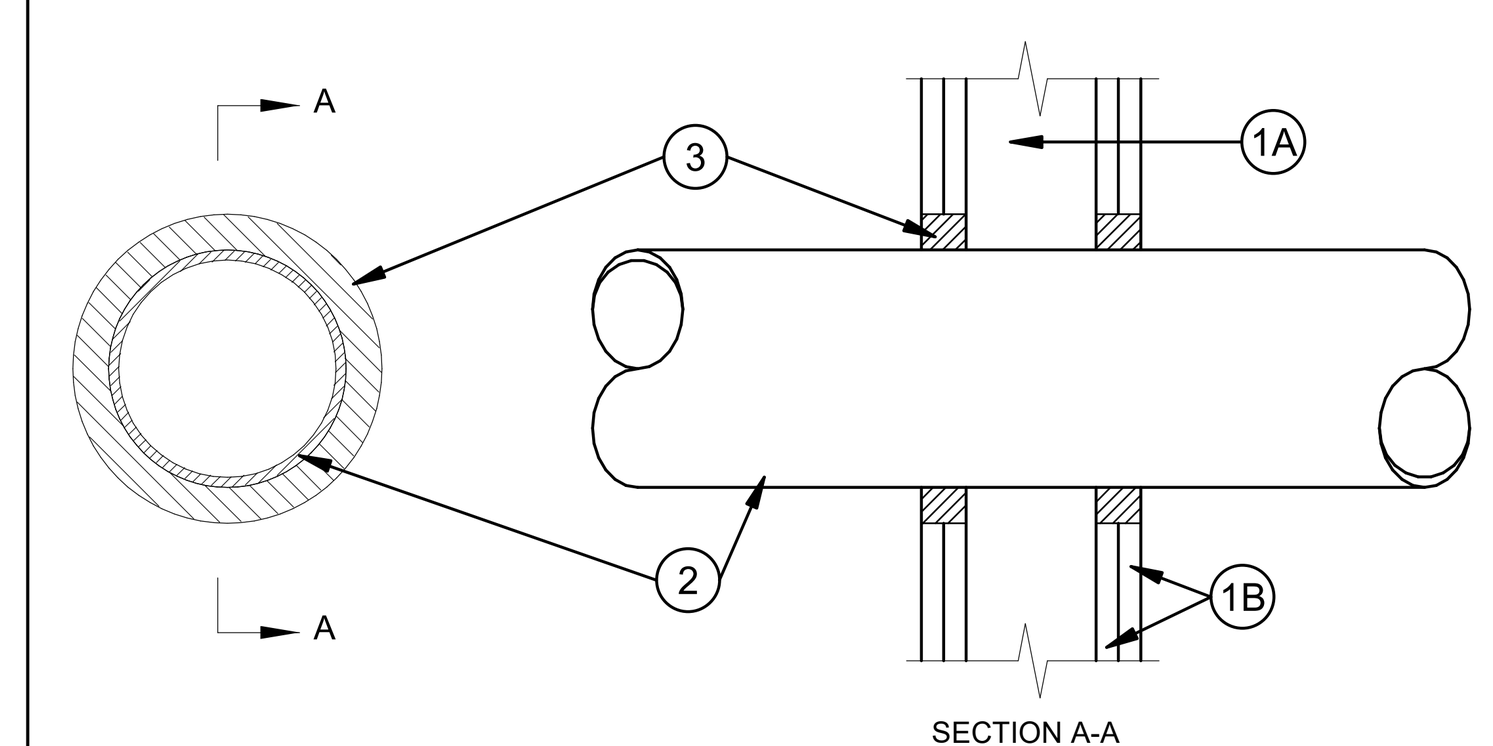

1. WALL ASSEMBLY - THE 1 OR 2 HR FIRE-RATED GYPSUM WALLBOARD/STUD WALL ASSEMBLY SHALL BE CONSTRUCTED OF THE MATERIALS AND IN THE MANNER SPECIFIED IN THE INDIVIDUAL U300 OR U400 SERIES WALL AND PARTITION DESIGNS IN THE UL FIRE RESISTANCE DIRECTORY AND SHALL INCLUDE THE FOLLOWING CONSTRUCTION FEATURES:
   A. STUDS -- WALL FRAMING MAY CONSIST OF EITHER WOOD STUDS OR STEEL CHANNEL STUDS. WOOD STUDS TO CONSIST OF NOM 2 BY 4 IN. (51 BY 102 mm) LUMBER SPACED 16 IN. (406 mm) O.C. STEEL STUDS TO BE MIN 2-1/2 IN. (64 mm) WIDE AND SPACED MAX. 24 IN. (610 mm) O.C. WHEN STEEL STUDS ARE USED AND THE DIA. OF OPENING EXCEEDS THE WIDTH OF STUD CAVITY, THE OPENING SHALL BE FRAMED ON ALL SIDES USING LENGTHS OF STEEL STUD INSTALLED BETWEEN THE VERTICAL STUDS AND SCREW-ATTACHED TO THE STEEL STUDS AT EACH END. THE FRAMED OPENING IN THE WALL SHALL BE 4 TO 6 IN. (102 TO 152 mm) WIDER AND 4 TO 6 IN. (102 TO 152 mm) HIGHER THAN THE DIA. OF THE PENETRATING ITEM SUCH THAT, WHEN THE PENETRATING ITEM IS INSTALLED IN THE OPENING, A 2 TO 3 IN. (51 TO 76 mm) CLEARANCE IS PRESENT BETWEEN THE PENETRATING ITEM AND THE FRAMING ON ALL FOUR SIDES.
   B. GYPSUM BOARD* - 5/8 IN. (16 mm) THICK, 4 FT (122 cm) WIDE WITH SQUARE OR TAPERED EDGES. THE GYPSUM BOARD TYPE, THICKNESS, NUMBER OF LAYERS, FASTENER TYPE AND SHEET ORIENTATION SHALL BE AS SPECIFIED IN THE INDIVIDUAL U300 OR U400 SERIES DESIGN IN THE UL FIRE RESISTANCE DIRECTORY. MAX. DIA. OF OPENING IS 32-1/4 IN. (819 mm) FOR STEEL STUD WALLS. MAX. DIA. OF OPENING IS 14-1/2 IN. (368 mm) FOR WOOD STUD WALLS.
   THE F AND FH RATINGS OF THE FIRESTOP SYSTEM ARE EQUAL TO THE FIRE RATING OF THE WALL ASSEMBLY.
2. THROUGH-PENETRANTS - ONE METALLIC PIPE, CONDUIT OR TUBING TO BE INSTALLED EITHER CONCENTRICALLY OR ECCENTRICALLY WITHIN THE FIRESTOP SYSTEM. THE ANNULAR SPACE SHALL BE MIN 0 IN. TO MAX. 2-1/4 IN. (57 MM) PIPE MAY BE INSTALLED WITH CONTINUOUS POINT CONTACT. PIPE, CONDUIT OR TUBING MAY BE INSTALLED AT AN ANGLE NOT GREATER THAN 45 DEGREES FROM PERPENDICULAR. PIPE, CONDUIT OR TUBING TO BE RIGIDLY SUPPORTED ON BOTH SIDES OF WALL ASSEMBLY. THE FOLLOWING TYPES AND SIZES OF METALLIC PIPES, CONDUITS OR TUBING MAY BE USED:
   A. STEEL PIPE -- NOM 30 IN. (762 mm) DIA. (OR SMALLER) SCHEDULE 10 (OR HEAVIER) STEEL PIPE.
   B. IRON PIPE -- NOM 30 IN. (762 mm) DIA. (OR SMALLER) CAST OR DUCTILE IRON PIPE.
   C. CONDUIT -- NOM 4 IN. (102 mm) DIA. (OR SMALLER) STEEL ELECTRICAL METALLIC TUBING OR 6 IN. (152 mm) DIA. STEEL CONDUIT.
   D. COPPER TUBING -- NOM 6 IN. (152 mm) DIA. (OR SMALLER) TYPE L (OR HEAVIER) COPPER TUBING.
   E. COPPER PIPE -- NOM 6 IN. (152 mm) DIA. (OR SMALLER) REGULAR (OR HEAVIER)COPPER PIPE.
3. FILL, VOID OR CAVITY MATERIAL* - SEALANT - MIN 5/8 IN. (16 mm) THICKNESS OF FILL MATERIAL APPLIED WITHIN THE ANNULUS, FLUSH WITH BOTH SURFACES OF WALL. AT THE POINT OR CONTINUOUS CONTACT LOCATIONS BETWEEN PIPE AND WALL, A MIN 1/2 IN. DIA. BEAD OF FILL MATERIAL SHALL BE APPLIED AT THE PIPE WALL INTERFACE ON BOTH SURFACES OF WALL.

HILTI CONSTRUCTION CHEMICALS, DIV OF HILTI INC - FS-ONE SEALANT OR FS-ONE MAX. INTUMESCENT SEALANT

*Indicates such products shall bear the UL or cUL Certification Mark for jurisdictions employing the UL or cUL Certification (such as Canada), respectively.

UL PENETRATION RATED METALLIC PIPE/ TUBING (UNINSULATED) — N.T.S. 5

IDENTIFICATION STAMP
DIV. OF THE STATE ARCHITECT
APP: 02-122821 INC: 2
REVIEWED FOR
SS ☑ FLS ☑ ACS ☑
DATE: 11/20/2025

Teter, Inc. expressly reserves its common law copyright and other property rights in these plans. This document, the ideas and designs incorporated herein, as an instrument of professional service, is not to be used in whole or in part, for any other project without prior written authorization.

MARK	DATE	DESCRIPTION
A	11/13/2025	DSA BACKCHECK

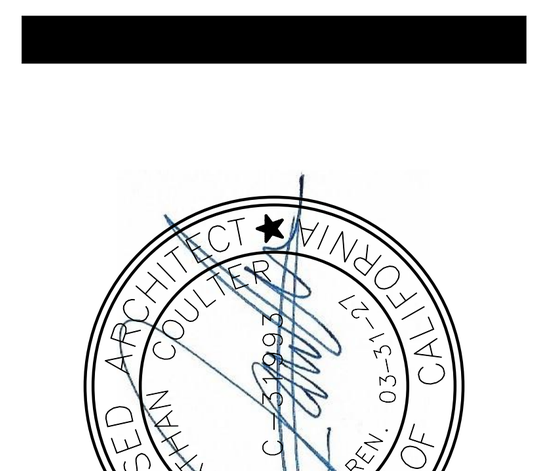

TETER, INC.
FRESNO HEADQUARTERS
VISALIA | BAKERSFIELD | MODESTO | SAN LUIS OBISPO
ARCHITECTS ENGINEERS CONNECTED

VISALIA CAMPUS UNIVERSITY CENTER
COLLEGE OF THE SEQUOIAS - INCREMENT 2
915 S. MOONEY BLVD
VISALIA, CALIFORNIA

DRAWING TITLE
FIRE RATED DETAILS

PROJECT NO.
22-12498

DRAWING
A870.2

\\tetr-file1\Users\tara.chong_TETR\Documents\12498-A-UC_tara.chong.rvt

PLOT DATE: 11/10/2025 9:09:59 AM

\\tet-file1\Users\tara.chong_TETR\Documents\12498-A-UC_tara.chong.rvt

UL 263/ U419

NOTE: DETAIL DOES NOT INCLUDE SECOND LAYER OF GYP. BOARD FOR ACOUSTICS THAT OCCURS AT SOME CONDITIONS. PLEASE REFER TO FLOOR PLAN FOR PARTITION TYPES

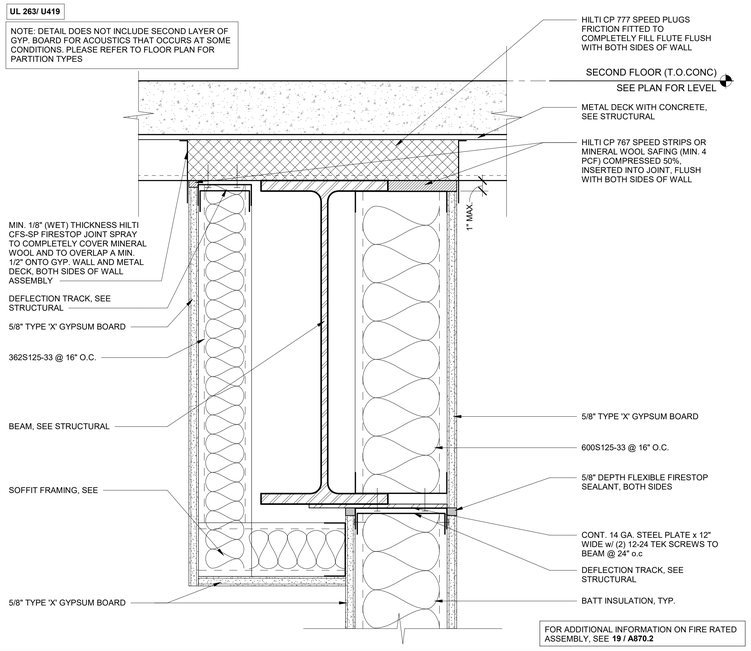

FOR ADDITIONAL INFORMATION ON FIRE RATED ASSEMBLY, SEE **19 / A870.2**

FIRE RATED WALL AT 2F DECK — 3" = 1'-0" — 22

UL 263/ U419

NOTE: DETAIL DOES NOT INCLUDE SECOND LAYER OF GYP. BOARD FOR ACOUSTICS THAT OCCURS AT SOME CONDITIONS. PLEASE REFER TO FLOOR PLAN FOR PARTITION TYPES

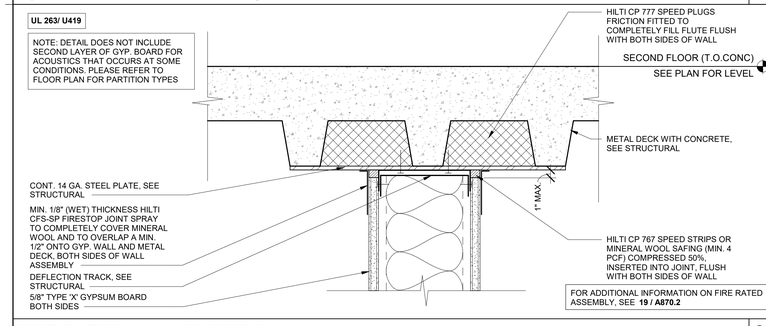

FOR ADDITIONAL INFORMATION ON FIRE RATED ASSEMBLY, SEE **19 / A870.2**

FIRE RATED WALL AT 2F DECK — 3" = 1'-0" — 23

UL 263/ U419

NOTE: DETAIL DOES NOT INCLUDE SECOND LAYER OF GYP. BOARD FOR ACOUSTICS THAT OCCURS AT SOME CONDITIONS. PLEASE REFER TO FLOOR PLAN FOR PARTITION TYPES

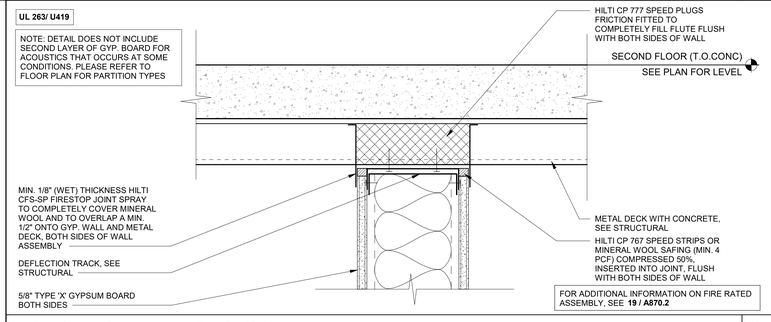

FOR ADDITIONAL INFORMATION ON FIRE RATED ASSEMBLY, SEE **19 / A870.2**

FIRE RATED WALL AT 2F DECK — 3" = 1'-0" — 24

UL 263/ U419

NOTE: DETAIL DOES NOT INCLUDE SECOND LAYER OF GYP. BOARD FOR ACOUSTICS THAT OCCURS AT SOME CONDITIONS. PLEASE REFER TO FLOOR PLAN FOR PARTITION TYPES

FIRE RATED WALL AT FLOOR — 3" = 1'-0" — 25

SYSTEM No. W-L-7188

ANSI/UL 1479 (ASTM E814)	CAN/ULC S115
F RATINGS - 1 AND 2 HR (SEE ITEM 1)	F RATINGS - 1 AND 2 HR (SEE ITEM 1)
T RATING - 0 HR	FT RATINGS - 0 HR
L RATING AT AMBLENT - 1 CFM/sq 4FT (SEE ITEM)	FH RATINGS - 1 AND 2 HR (SEE ITEM 1)
L RATING AT 400 F - LESS THAN 1 CFM/sq ft (SEE ITEM)	FTH RATING - 0HR
	L RATING AT AMBIENT - 1 CFM/sq ft (SEE ITEM)
	L RATING AT 400 F - LESS THAN 1 CFM/sq ft (SEE ITEM)

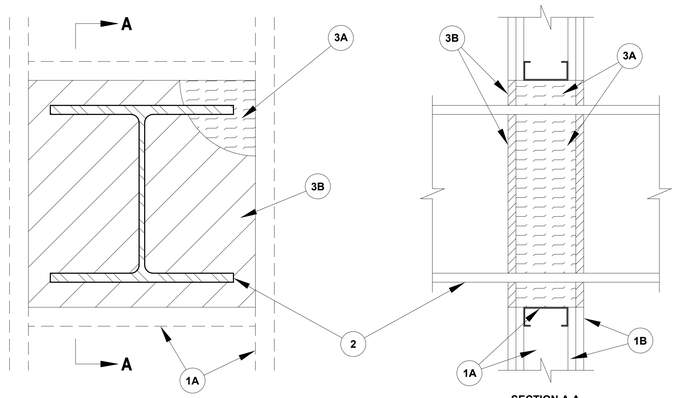

SECTION A-A

1. WALL ASSEMBLY - THE 1 OR 2 HR FIRE RATED GYPSUM BOARD/STUD WALL ASSEMBLY SHALL BE CONSTRUCTED OF THE MATERIALS AND IN THE MANNER SPECIFIED IN THE INDIVIDUAL U400, V400, OR W400 SERIES WALL AND PARTITION DESIGNS IN THE UL FIRE RESISTANCE DIRECTORY AND SHALL INCLUDE THE FOLLOWING CONSTRUCTION FEATURES:
   A. STUDS - WALL FRAMING SHALL CONSIST OF STEEL CHANNEL STUDS, STEEL STUDS TO BE MIN 3 1/2" WIDE AND SPACED MAX. 24" O.C. OPENING FRAMED OUT WITH STEEL STUDS TO FORM A RECTANGULAR BOX AROUND THROUGH PENETRANT.
   B. GYPSUM BOARD - ONE OR TWO LAYERS OF GYPSUM BOARD, AS SPECIFIED IN THE INDIVIDUAL WALL AND PARTITION DESIGN, MAX AREA OF RECTANGULAR OPENING IS 324 sq. in. WITH MAX. DIMENSION OF 18"
   THE HOURLY F AND FH RATINGS OF THE FIRESTOP SYSTEM ARE EQUAL TO THE HOURLY FIRE RATING OF THE WALL ASSEMBLY IN WHICH IT IS INSTALLED.

2. THROUGH PENETRANT - ONE W14x90 (OR SMALLER) STEEL BEAM SEVICE SUPPORT TO BE IN STALLED WITHIN THE FIRESTOP SYSTEM. AN ANNULAR SPACE OF MIN. 1/2" TO MAX. 3" IS REQUIRED BETWEEN THE STEEL BEAM AND THE PERIPHERY OF THE OPENING. STEEL BEAM SERVICE SUPPORT TO BE RIGIDLY SUPPORTED ON BOTH SIDES OF WALL ASSEMBLY.

3. FIRESTOP SYSTEM - THE FIRESTOP SYSTEM SHALL CONSIST OF THE FOLLOWING ITEMS:
   A. PACKING MATERIAL - MINERAL WOOL BATT INSULATION, NOM 4 PCF, TIGHTLY-PACKED INTO OPENING TO FULL DEPTH OF WALL EXCEPT FOR MIN. 5/8" RECESS ON EACH SIDE OF WALL AS REGULATED TO ACCOMMODATE FILL MATERIAL
   B. FILL, VOID OR CAVITY MATERIAL - SEALANT - MIN. 5/8" THICKNESS OF FILL MATERIAL APPLIED TO FILL ANNULAR SPACE AROUND STEEL BEAM FLUSH WITH EACH SURFACE OF WALL
   HILTI CONSTRUCTION CHEMICALS, DIV. OF HILTI INC. - FS-ONE MAX. INTUMESCENT SEALANT

*INDICATES SUCH PRODUCTS SHALL BEAR THE UL OR cUL CERTIFICATION MARK FOR JURISDICTIONS EMPLYOYING THE UL OR cUL CERTIFICATION (SUCH AS CANADA), RESPECTIVELY.

STEEL BEAM FIRE RATED PENETRATION SYSTEM — N.T.S. — 13

UL 263/ U419

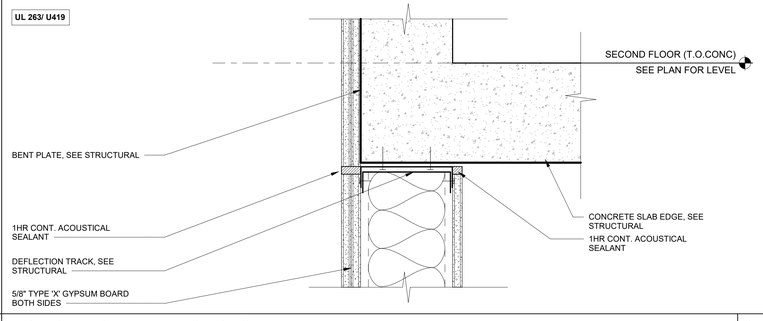

FIRE RATED WALL AT 2F DECK — 3" = 1'-0" — 14

UL 438/ U411

NOTE: DETAIL DOES NOT INCLUDE SECOND LAYER OF GYP. BOARD FOR ACOUSTICS THAT OCCURS AT SOME CONDITIONS. PLEASE REFER TO FLOOR PLAN FOR PARTITION TYPES

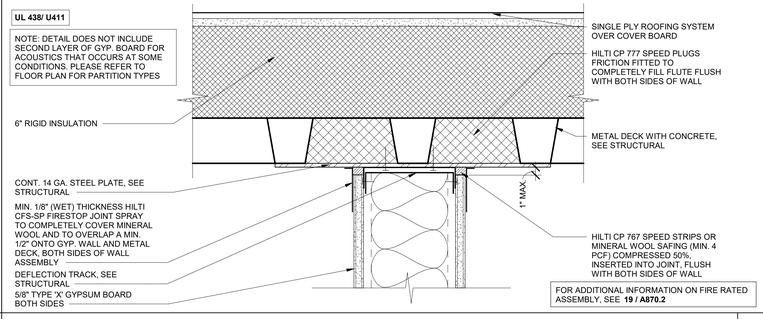

FOR ADDITIONAL INFORMATION ON FIRE RATED ASSEMBLY, SEE **19 / A870.2**

FIRE RATED WALL AT ROOF — 3" = 1'-0" — 15

BXUV - FIRE RESISTANCE RATINGS - ANSI/UL 263 CERTIFIED FOR UNITED STATES

DESIGN NO. U469, DECEMBER 29, 2020, ASSEMBLY RATING — 1 HR, NONBEARING WALL

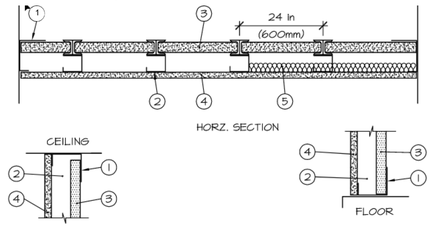

1. FLOOR AND CEILING RUNNERS — "J" - SHAPED, 2-1/2 IN. WIDE WITH UNEQUAL LEGS OF 1 IN. AND 2 IN., FABRICATED FROM 24 MSG GALV STEEL (MIN 20 MSG STEEL REQUIRED WHEN ITEM 4A, 4B, OR 4C IS USED). RUNNERS ATTACHED TO STRUCTURAL SUPPORTS WITH STEEL FASTENERS LOCATED NOT GREATER THAN 2 IN. FROM ENDS AND NOT GREATER THAN 24 IN. OC.

2. STEEL STUDS — "C-H" SHAPED STUDS, 2-1/2 IN. WIDE BY 1-1/2 IN. DEEP, FABRICATED FROM MIN 25 MSG GALV STEEL (MIN 20 MSG STEEL REQUIRED WHEN ITEM 4A, 4B, OR 4C IS USED), SPACED 24 IN. OR 600 MM OC (MAX 16 IN. OC WHEN ITEM 4A, 4B, OR 4C IS USED). VERTICALLY RESTRAINED WALLS REQUIRE STUDS TO BE CUT 3/8 IN. LESS THAN FLOOR TO CEILING HEIGHT.

3. GYPSUM BOARD* — 1 IN. THICK GYPSUM WALLBOARD LINER PANELS, SUPPLIED IN NOMINAL 24 IN. OR 600 MM WIDTHS. VERTICAL EDGES INSERTED IN "H" SHAPED SECTION OF "C-H" STUDS. FREE EDGE OF END PANELS ATTACHED TO LONG LEG OF "J" RUNNERS WITH 1-5/8 IN. LONG TYPE S HEAD STEEL SCREWS SPACED NOT GREATER THAN 12 IN. OC.

CERTAINTEED GYPSUM INC — TYPES SHAFTLINER, EGRG SHAFTLINER OR GLASROC SHAFTLINER
CGC INC — TYPE SLX
CERTAINTEED GYPSUM INC — TYPE LGFCSL
GEORGIA-PACIFIC GYPSUM L L C — TYPES TP-6, DGUSL, AND TRSL
UNITED STATES GYPSUM CO — TYPE SLX
USG BORAL DRYWALL SFZ LLC — TYPE SLX
USG MEXICO S A DE C V — TYPE SLX.

4. GYPSUM BOARD* — 5/8 IN. THICK, 4 FT OR 1200 MM WIDE, APPLIED VERTICALLY AND ATTACHED TO STUDS WITH 1 IN. LONG TYPE S STEEL SCREWS SPACED 12 IN. OC ALONG THE EDGES AND IN THE FIELD OF THE BOARDS.

AMERICAN GYPSUM CO — TYPES AGX-1, M-GLASS, AG-C, LIGHTROC.
CABOT MANUFACTURING ULC — 5/8 TYPE X, TYPE BLUEGLASS EXTERIOR SHEATHING
CERTAINTEED GYPSUM INC — TYPE C, TYPE X, TYPE X-1.
CGC INC — TYPES C, IP-X1, IP-X2, IPC-AR, SCX, ULIX, ULX, OR WRC.
CERTAINTEED GYPSUM INC — TYPES LGFC-C, LGFC-C/A, LGFC6A
GEORGIA-PACIFIC GYPSUM L L C — TYPES S, DAPC, TYPE X, VENEER PLASTER BASE - TYPE X, WATER RATED - TYPE X, SHEATHING - TYPE X, SOFFIT - TYPE X, TYPE TG-C, TYPE LWX, VENEER PLASTER BASE-TYPE LWX, WATER RATED-TYPE LWX, SHEATHING TYPE-LWX, SOFFIT-TYPE LWX, TYPE DGLW, WATER RATED-TYPE DGLW, SHEATHING TYPE- DGLW, SOFFIT-TYPE DGLW, TYPE LW2X, VENEER PLASTER BASE - TYPE LW2X, WATER RATED - TYPE LW2X, SHEATHING - TYPE LW2X, SOFFIT - TYPE LW2X, TYPE DGL2W, WATER RATED - TYPE DGL2W, SHEATHING - TYPE DGL2W, TYPE DGG, TYPE DAP, TYPE DS.
PABCO BUILDING PRODUCTS L L C, DBA PABCO GYPSUM — TYPES C, PG-11, PG-C, PGS-WRS, PGI
SAINT-GOBAIN GYPROC MIDDLE EAST FZE — TYPE GYPROC FIRESTOP, GYPROC FIRESTOP MR, GYPROC FIRESTOP M2TECH, GYPROC FIRESTOP MR ACTIV'AIR, GYPROC FIRESTOP M2TECH ACTIV'AIR, GYPROC DURALINE, GYPROC DURALINE MR, GYPROC DURALINE M2TECH, GYPROC DURALINE ACTIV'AIR, GYPROC DURALINE MR ACTIV'AIR, GYPROC DURALINE M2TECH ACTIV'AIR
THAI GYPSUM PRODUCTS PCL — TYPE C.
UNITED STATES GYPSUM CO — TYPES C, FRX-G, IP-X1, IP-X2, IPC-AR, SCX, ULIX, ULX OR WRC.
USG BORAL DRYWALL SFZ LLC — TYPES C, SCX.
USG MEXICO S A DE C V — TYPES C, IP-X1, IP-X2, IPC-AR, SCX, ULX, OR WRC.

4A. GYPSUM BOARD* — NOT SHOWN - AS AN ALTERNATE TO ITEM 4. NOM 5/8 IN. THICK LEAD BACKED GYPSUM PANELS WITH BEVELED, SQUARE OR TAPERED EDGES, APPLIED VERTICALLY. VERTICAL JOINTS CENTERED OVER STUDS AND STAGGERED MIN 1 STUD CAVITY ON OPPOSITE SIDES OF STUDS. WALLBOARD SECURED TO STUDS WITH 1-1/4 IN. LONG TYPE S-12 STEEL SCREWS SPACED 8 IN. OC AT PERIMETER AND 12 IN. OC IN THE FIELD. LEAD BATTEN STRIPS REQUIRED BEHIND VERTICAL JOINTS
RAY-BAR ENGINEERING CORP — TYPE RB-LBG

4B. GYPSUM BOARD* — NOT SHOWN - AS AN ALTERNATE TO ITEM 4. NOM 5/8 IN. THICK LEAD BACKED GYPSUM PANELS WITH BEVELED, SQUARE OR TAPERED EDGES, APPLIED VERTICALLY. VERTICAL JOINTS CENTERED OVER STUDS AND STAGGERED MIN 1 STUD CAVITY ON OPPOSITE SIDES OF STUDS. WALLBOARD SECURED TO STUDS WITH 1-1/4 IN. LONG TYPE S-12 STEEL SCREWS SPACED 8 IN. OC AT PERIMETER AND 12 IN. OC IN THE FIELD. LEAD BATTEN STRIPS REQUIRED BEHIND VERTICAL JOINTS. TO BE USED WITH LEAD BATTEN STRIPS (SEE ITEM 6B) OR LEAD DISCS (SEE ITEM 6C).

MAYCO INDUSTRIES INC — TYPE X-RAY SHIELDED GYPSUM

4C. GYPSUM BOARD* — (NOT SHOWN - AS AN ALTERNATE TO ITEM 4.) NOM 5/8 IN. THICK LEAD BACKED GYPSUM PANELS WITH BEVELED, SQUARE OR TAPERED EDGES, APPLIED VERTICALLY. VERTICAL JOINTS CENTERED OVER STUDS AND STAGGERED MIN 1 STUD CAVITY ON OPPOSITE SIDES OF STUDS. WALLBOARD SECURED TO STUDS WITH 1-1/4 IN. LONG TYPE S-12 STEEL SCREWS GYPSUM PANEL STEEL SCREWS SPACED 8 IN .OC AT PERIMETER AND 12 IN. OC IN THE FIELD. LEAD BATTEN STRIPS REQUIRED BEHIND VERTICAL JOINTS OF LEAD BACKED GYPSUM WALLBOARD AND OPTIONAL AT REMAINING STUD LOCATIONS. LEAD BATTEN STRIPS, MIN 2 IN. WIDE, MAX 8 FT LONG WITH A MAX THICKNESS OF 0.14 IN. PLACED ON THE FACE OF STUDS AND ATTACHED TO THE STUD WITH CONSTRUCTION ADHESIVE AND TWO 1 IN. LONG TYPE S-12 PAN HEAD STEEL SCREWS, ONE AT THE TOP OF THE STRIP AND ONE AT THE BOTTOM OF THE STRIP. LEAD DISCS, NOMINAL 3/8 IN. DIAM BY MAX 0.085 IN. THICK. COMPRESSION FITTED OR ADHERED OVER THE SCREW HEADS. LEAD BATTEN STRIPS AND DISCS TO HAVE A PURITY OF 99.9% MEETING THE FEDERAL SPECIFICATION QQ-L-201F, GRADE "C".

RADIATION PROTECTION PRODUCTS INC — TYPE RPP - LEAD LINED DRYWALL

5. BATTS AND BLANKETS* — (OPTIONAL) — MINERAL WOOL BATTS PARTIALLY OR COMPLETELY FILLING STUD CAVITY

ROCKWOOL — TYPE AFB, MIN. DENSITY 1.8 PCF / 28.8 KG/M
THERMAFIBER INC — TYPE SAFB, SAFB FF

5A. FIBER, SPRAYED* — AS AN ALTERNATE TO BATTS AND BLANKETS (ITEM 5) — (100% BORATE FORMULATION) — SPRAY APPLIED CELLULOSE MATERIAL. THE FIBER IS APPLIED WITH WATER TO COMPLETELY FILL THE ENCLOSED CAVITY IN ACCORDANCE WITH THE APPLICATION INSTRUCTIONS SUPPLIED WITH THE PRODUCT WITH A NOMINAL DRY DENSITY OF 2.7 LB/FT . ALTERNATE APPLICATION METHOD: THE FIBER IS APPLIED WITHOUT WATER OR ADHESIVE AT A NOMINAL DRY DENSITY OF 3.5 LB/FT , IN ACCORDANCE WITH THE APPLICATION INSTRUCTIONS SUPPLIED WITH THE PRODUCT.

U S GREENFIBER L L C — INS735, INS745 AND INS750LD FOR USE WITH WET OR DRY APPLICATION. INS765LD AND INS773LD ARE TO BE USED FOR DRY APPLICATION ONLY.

5B. FIBER, SPRAYED* — AS AN ALTERNATE TO BATTS AND BLANKETS (ITEM 5) - SPRAY APPLIED CELLULOSE INSULATION MATERIAL. THE FIBER IS APPLIED WITH WATER TO INTERIOR SURFACES IN ACCORDANCE WITH THE APPLICATION INSTRUCTIONS SUPPLIED WITH THE PRODUCT. APPLIED TO COMPLETELY FILL THE ENCLOSED CAVITY. MINIMUM DRY DENSITY OF 4.3 POUNDS PER CUBIC FT.

NU-WOOL CO INC — CELLULOSE INSULATION

5C. FIBER, SPRAYED* — AS AN ALTERNATE TO BATTS AND BLANKETS (ITEM 5) - SPRAY APPLIED CELLULOSE FIBER. THE FIBER IS APPLIED WITH WATER TO COMPLETELY FILL THE ENCLOSED CAVITY IN ACCORDANCE WITH THE APPLICATION INSTRUCTIONS SUPPLIED WITH THE PRODUCT. THE MINIMUM DRY DENSITY SHALL BE 4.30 LBS/FT .

INTERNATIONAL CELLULOSE CORP — CELBAR-RL

5D. DELETED.

5E. FIBER, SPRAYED* — AS AN ALTERNATE TO BATTS AND BLANKETS (ITEM 5) - SPRAY-APPLIED CELLULOSE MATERIAL. THE FIBER IS APPLIED WITH WATER TO COMPLETELY FILL THE ENCLOSED CAVITY IN ACCORDANCE WITH THE APPLICATION INSTRUCTIONS SUPPLIED WITH THE PRODUCT. TO FACILITATE THE INSTALLATION OF THE MATERIAL, ANY THIN, WOVEN OR NON-WOVEN NETTING MAY BE ATTACHED BY ANY MEANS POSSIBLE TO THE OUTER FACE THE STUDS. THE MATERIAL SHALL REACH EQUILIBRIUM MOISTURE CONTENT BEFORE THE INSTALLATION OF MATERIALS ON EITHER FACE OF THE STUDS. THE MINIMUM DRY DENSITY SHALL BE 5.79 LBS/FT .

APPLEGATE HOLDINGS L L C — APPLEGATE ADVANCED STABILIZED CELLULOSE INSULATION

6. LEAD BATTEN STRIPS — FOR USE WITH ITEM 4A - (NOT SHOWN) — LEAD BATTEN STRIPS REQUIRED BEHIND VERTICAL JOINTS OF LEAD BACKED GYPSUM WALLBOARD (ITEM 4A) AND OPTIONAL AT REMAINING STUD LOCATIONS. STRIPS, MIN 1-1/2 IN. WIDE, MAX 10 FT LONG WITH A MAX THICKNESS OF 0.125 IN. STRIPS PLACED ON THE INTERIOR FACE OF STUDS AND ATTACHED FROM THE EXTERIOR FACE OF THE STUD WITH TWO 1 IN. LONG TYPE S-12 PAN HEAD STEEL SCREWS, ONE AT THE TOP OF THE STRIP AND ONE AT THE BOTTOM OF THE STRIP. LEAD BATTEN STRIPS TOHAVE A PURITY OF 99.9% MEETING THE FEDERAL SPECIFICATION QQ-L-201F, GRADE "C".

6A. LEAD DISCS OR TABS — (NOT SHOWN) - USED IN LIEU OF OR IN ADDITION TO THE LEAD BATTEN STRIPS (ITEM 6) OR OPTIONAL AT OTHER LOCATIONS - MAX 3/4 IN. DIAM BY MAX 0.125 IN. THICK LEAD DISCS COMPRESSION TTED OR ADHERED OVER STEEL SCREW HEADS OR MAX 1/2 IN. BY 1-1/4 IN. BY MAX 0.125 IN. THICK LEAD TABS PLACED ON GYPSUM BOARDS (ITEM 5) UNDERNEATH SCREW LOCATIONS PRIOR TO THE INSTALLATION OF THE SCREWS. LEAD DISCS OR TABS TO HAVE A PURITY OF 99.9% MEETING THE FEDERAL SPECIFICATION QQ-L-201F, GRADE "C".

6B. LEAD BATTEN STRIPS — (NOT SHOWN, FOR USE WITH ITEM 4B) LEAD BATTEN STRIPS, 2 IN. WIDE, MAX 10 FT LONG WITH A MAX THICKNESS OF 0.140 IN. STRIPS PLACED ON THE FACE OF STUDS AND ATTACHED TO THE STUD WITH TWO MIN. 1 IN. LONG MIN. TYPE S-8 PAN HEAD STEEL SCREWS, ONE AT THE TOP OF THE STRIP AND ONE AT THE BOTTOM OF THE STRIP OR WITH ONE MIN. 1 IN. LONG MIN. TYPE S-8 PAN HEAD STEEL SCREW AT THE TOP OF THE STRIP. LEAD BATTEN STRIPS TO HAVE A PURITY OF 99.5% MEETING THE FEDERAL SPECIFICATION QQ-L-201F, GRADES "B, C OR D".

6C. LEAD DISCS — (NOT SHOWN, FOR USE WITH ITEM 4B) MAX 5/16 IN. DIAM BY MAX 0.140 IN. THICK LEAD DISCS COMPRESSION FITTED OR ADHERED OVER STEEL SCREW HEADS. LEAD DISCS TO HAVE A PURITY OF 99.5% MEETING THE FEDERAL SPECIFICATION QQ-L-201F, GRADES "B, C OR D"

*** INDICATES SUCH PRODUCTS SHALL BEAR THE UL OR CUL CERTIFICATION MARK FOR JURISDICTIONS EMPLOYING THE UL OR CUL CERTIFICATION (SUCH AS CANADA) RESPECTIVELY.**

SHAFT WALL ASSEMBLY — N.T.S. — 4

UL 438/ U411

NOTE: DETAIL DOES NOT INCLUDE SECOND LAYER OF GYP. BOARD FOR ACOUSTICS THAT OCCURS AT SOME CONDITIONS. PLEASE REFER TO FLOOR PLAN FOR PARTITION TYPES

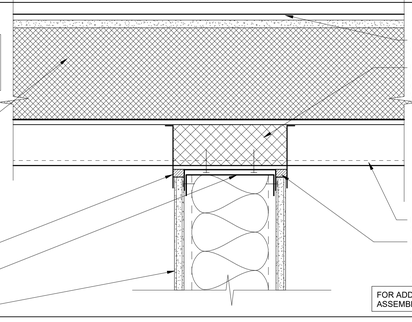

FOR ADDITIONAL INFORMATION ON FIRE RATED ASSEMBLY, SEE **19 / A870.2**

FIRE RATED WALL AT ROOF — 3" = 1'-0" — 5

IDENTIFICATION STAMP
DIV. OF THE STATE ARCHITECT
APP: 02-122821 INC: 2
REVIEWED FOR
SS ☑ FLS ☑ ACS ☑
DATE: 11/20/2025

Teter, Inc. expressly reserves its common law copyright and other property rights in these plans. This document, the ideas and designs incorporated herein, as an instrument of professional service, is not to be used in whole or in part, for any other project without prior written authorization.

MARK	DATE	DESCRIPTION
A.	11/13/2025	DSA BACKCHECK

TETER, INC.
ARCHITECTS ENGINEERS CONNECTED
FRESNO HEADQUARTERS
VISALIA | BAKERSFIELD | MODESTO | SAN LUIS OBISPO

VISALIA CAMPUS UNIVERSITY CENTER
COLLEGE OF THE SEQUOIAS - INCREMENT 2
915 S. MOONEY BLVD
VISALIA, CALIFORNIA

DRAWING TITLE
FIRE RATED DETAILS

PROJECT NO.
22-12498

DRAWING
A871.2

PLOT DATE: 11/10/2025 9:10:06 AM

\\tet-file1\Users\tara.chong_TETR\Documents\12498-A-UC_tara.chong.rvt

BXUV - Fire Resistance Ratings - ANSI/UL 263 Certified for United States
BXUV7 - Fire Resistance Ratings - CAN/ULC-S101 Certified for Canada
See General Information for Fire-resistance Ratings - ANSI/UL 263 Certified for United States
Design Criteria and Allowable Variances

See General Information for Fire Resistance Ratings - CAN/ULC-S101 Certified for Canada
Design Criteria and Allowable Variances

Design No. D902

Restrained Assembly Ratings — 1, 1-1/2, 2 and 3 Hr.
Unrestrained Assembly Ratings — 0, 1, 1-1/2, 2 or 3 Hr. (See Items 4 & 6)
Unrestrained Beam Ratings — 1, 1-1/2, 2 and 3 Hr.
This design was evaluated using a load design method other than the Limit States Design Method (e.g., Working Stress Design Method). For jurisdictions employing the Limit States Design Method, such as Canada, a load restriction factor shall be used — See Guide BXUV or BXUV7

*** Indicates such products shall bear the UL or cUL Certification Mark for jurisdictions employing the UL or cUL Certification (such as Canada), respectively.**

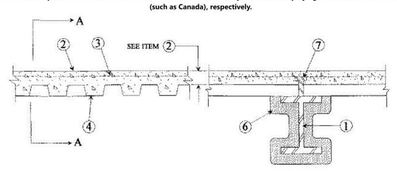

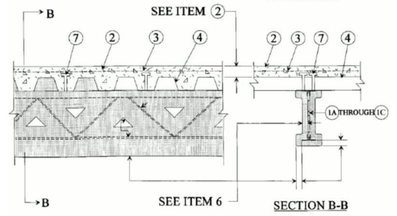

1. **Beam —** W8X28, W8x24, W6x12 or W6x9, min size, see Items 6 through 6F.

1A. **Steel Joists —** (Not Shown) — As an alternate to Item 1 — Composite or non-composite min 8k1 or min depth and weight shall be 8 in. and 4.9 lb/ft respectively. May be uncoated or provided with a shop coat of paint. Designed per S.J.I. specifications for a max design stress of 30, 000 psi (30 ksi). Welded or bolted to end supports. Top chords shall consist of two angles measuring 1-1/4 by 1-1/4 by 0.127 in. thick. Bottom chords shall consist of two round bars measuring 0.566 in. in diam. or two angles measuring 1 by 1 by 0.125 in. thick. Bearing plates shall consist of two angles measuring 1-1/2 by 2 by 0.188 in. thick and 5-1/16 in. long. Web members shall consist of 0.565 in. diam bars.

1B. **Steel Joists —** (Not Shown) — As an alternate to Item 1 — Composite or non-composite min 12k5 or min depth and weight shall be 12 in. and 7.1 lb/ft respectively. May be uncoated or provided with a shop coat of paint. Designed per S.J.I. specifications for a max design stress of 30, 000 psi (30 ksi). Welded or bolted to end supports. Top chords shall consist of two angles measuring 1-1/2 by 1-1/2 by 0.156 in. thick. Bottom chords shall consist of two round bars measuring 0.675 in. in diam. or two angles measuring 1 by 1 by 0.125 in. thick. Bearing plates shall consist of two angles measuring 2 by 2 by 0.192 in. thick and shall be min 4-15/16 in long. The second web member at each end shall consist of 0.654 in. diam round bar. All remaining web members, including the end web members, shall consist of 0.774 in. diam round bars. Bridging per S.J.I. specifications is required when non-composite joists are used.

1C. **Steel Joists —** (Not Shown) — As an alternate to Item 1 — Composite or non-composite min 12k5 or min depth and weight shall be 12 in. and 7.1 lb/ft respectively. May be uncoated or provided with a shop coat of paint. Designed per S.J.I. specifications for a max design stress of 30, 000 psi (30 ksi). Welded or bolted to end supports. Top chords shall consist of two angles measuring 1-1/2 by 1-1/2 by 0.156 in. thick. Bottom chord shall consist of two round bars measuring 0.675 in. in diam. or two angles measuring 1 by 1 by 0.125 in. thick. The second web member at each end shall consist of 0.654 in. diam round bar. All remaining web members, including the end web members, shall consist of 0.774 in. diam round bars. Bridging per S.J.I. specifications is required when non-composite joists are used.
Note: Additional beams or joists from the N series designs may be substituted for the listed beam (item 1) or joist (item 1A) respectively. When joists are substituted, the restrained rating of the joist must be equal to or greater than the restrained rating of the assembly. Additional beam and joist substitution requirements are in the front of the Fire Resistance Directory - III. FLOOR-CEILINGS AND ROOF-CEILING, item 7 -Steel Joist or IV. BEAMS.

2. **Normal Weight or Light Weight Concrete —** Normal weight concrete, carbonate or siliceous aggregate, 3500 psi compressive strength, vibrated. Light weight concrete, expanded shale or slate aggregate by rotary-kiln method or expanded clay aggregate by rotary-kiln or sintered-grate method, or pelletized expanded blast furnace slag aggregate, 3000 psi compressive strength, vibrated, 4 to 7 per cent entrained air.

Restrained Assembly Rating Hr	Concrete (Type)	Concrete Unit Weight pcf	Concrete Thkns In.
1	Normal Weight	147-153	3-1/2
1-1/2	Normal Weight	147-153	4
2	Normal Weight	147-153	4-1/2
3	Normal Weight	147-153	5-1/4
1	Light Weight	107-113	2-1/2
1	Light Weight	107-120	2-5/8
1-1/2	Light Weight	107-113	3
2	Light Weight	107-113	3-1/4
2	Light Weight	107-116	3-1/4*
2	Light Weight	114-120	3-1/2
3	Light Weight	107-113	4-3/16
3	Light Weight	114-120	4-7/16

* With 2 and 3 in. deep steel floor units only.

3. **Welded Wire Fabric —** 6x6 - W1.4xW1.4.

3A. **Negative Reinforcement —** (Optional, Not Shown) Used in lieu of Item 3 and with Items 3B or 3C. For floor spans with concrete cast continuous over the supporting beams. Deformed bars designed to resist the support moments of the concrete slab in accordance with the latest ACI Building Code Specifications.

3B. **Fiber Reinforcement* —** (Not Shown) — Required with Item 3A. Engineered synthetic fibers added to concrete mix to control shrinkage cracks in concrete. Fibers added to concrete mix at rate of 1 lb of fiber for each cubic yard of concrete.
PROPEX OPERATING COMPANY L L C — Fibermesh 150 and Fibermesh 300.

3C. **Fiber Reinforcement* —** (Not Shown) — Required with Item 3A. Any fiber reinforcement bearing the UL Classification Marking for Fire Resistance, Classified for use in lieu of welded wire fabric.
See **Fiber Reinforcement** (CBXQ) Category for names of manufacturers.

4. **Steel Floor and Form Units* —** Composite or non-composite, 1-1/2, 1-5/8 , 2 or 3 in. deep galv units or 4-1/2 in. deep non-composite galv units. Fluted units may be phos/ptd. Min gauges are 22 MSG for fluted and 20/20 for cellular and partial cellular units. The following combinations of units may be used:
(1) All 24, 26, 28 or 36 in. wide cellular or partial cellular.

(2) All fluted.

(3) One or two 3 in. deep, 12 in. wide, 18/18 MSG min cellular alternating with 3 in. deep fluted or other cellular.

(4) Any blend of fluted and 24, 26, 28 or 36 in. wide cellular or partial cellular.

(5) Corrugated, nom 1-5/16 or 2 in. deep, 30 in. wide, 24 MSG min galv units with shear wires factory welded to deck corrugations. Welded to supports 12 in. OC through welding washers. For shear wire spacing of 8 in. or less the steel deck stress shall not exceed 20 KSI. For shear wire spacing greater than 8 in. OC but less than or equal to 12 in. OC steel deck stress shall not exceed 12 KSI.

ASC STEEL DECK, DIV OF ASC PROFILES L L C — 32 in. wide Types NH-32, NHH-32, NHF-32; 36 in. wide, Types BH-36, BHH-36, BHN-35-1/4, BHF-36, BHF-36A, 2WH-36, 2WHS-36, 2WHF-36, 2WHF-36A, 3WH-36, 3WHF-36, 3WHF-36A, 3W-36, 3WF-36, DG3W-36, DG3WF-36. All units may be galvanized or Prime Shield. Non-cellular decks may be vented designated with a "V" suffix to the product name. Cellular deck top and bottom sections may be riveted together (designated with "Fr") vs. arc spot welded. "F"

CANAM GROUP INC — 24 in. wide Type P-2432 composite or 36 in. wide Type P-3623, P-3606, P-3615 and 24 in wide Type P-2432 composite, Type P-3606 and P-3615 non-composite; 24 or 36 in. wide Type 3 in. LOK-Floor; 36 in. wide Types 1.5B, 1.5Bi, 1.5BL and 1.5BL.

CANAM STEEL CORP — 24 in. wide Type P-2432 composite or 36 in. wide Type P-3623, P-3606, P-3615 and 24 in wide Type P-2432 composite, Type P-3606 and P-3615 non-composite

CANAM STEEL CORP — 12 or 24 in. wide, Types 1-1/2, 2, or 3 in. LOK-Floor and LOK-Floor Cell; 36 in. wide, Types 2 or 3 in. LOK-Floor and LOK-Floor Cell; 24, 30 or 36 in. wide, Type 1-1/2 in. B-LOK and B-LOK Cell; 24 in. wide, Types N-LOK and N-LOK Cell

CENTRIA, A DIVISION OF NCI GROUP, INC — QL Types, 24 in. wide, 3 or 3 inverted, UXX, 21 or 21 inverted, 2 in. 99, 121, AXX, NXX, TXX, 24 or 30 in. wide GKX, GKXH, GKX-A; 36 in. wide 2 in. 99, AXX, WXX; 12 in. wide NXC, TXC, 12 in. wide non-composite Sec 12. Side joints of 99, 121, TXC, TKX, WKX may be welded together 60 in. OC. Side joints of 99, AXX, WXX, GKX, GKX-A, TKX may be fastened together with min 1 in. long No. 12x14 self-drilling, self-tapping steel screws 36 in. OC

CHIA TEH CONSTRUCTION MATERIAL CO LTD — 24 or 36 in. wide Mac-Lok 3; 24 in. wide CFD-3

DECK WEST INC — 36 in. wide Type B-DW, Inverted B-DW, BA-DW, Inverted BA-DW, 2-DW or 3-DW. Side joints of Type 2-DW and 3-DW may be fastened together with min 1 in. long No. 12 x 14 self-drilling, self-tapping steel screws 36 in. OC

DESIGN ASSISTANCE CONSTRUCTION SYSTEMS INC — 36 in. wide Type DACS1.5CD, or 24 in. wide Type DACS2.0CD, or DACS3.0CD

EPIC METALS CORP — 24 in. wide Types EC150, EC150 inverted, EC300, EC366, ECP150, ECP300, ECP366, ECA; 30 in. wide Types ECB150, ECBR150; 36 in. wide Types EC156, EC266, ECP266

KAM INDUSTRIES LTD, DBA CORDECK — 24 in. wide, Types 2 or 3 in. WDR

MARLYN STEEL DECKS INC — Type 1.5 CF, 2.0 CF or 3.0 CF

NEW MILLENNIUM BUILDING SYSTEMS L L C — 24 or 36 in. wide Types 2.0CD, 3.0CD, 2.0CFD, 3.0CFDS; 24, 30 or 36 in. wide Types 1.5CD, 1.5CDI, 1.5CDR, 1.5CFD. Fluted units may be phos/painted or galvanized.

ROOF DECK INC — 36 in. wide Types LOK-1-1/2, LOK-1-1/2R; 24 in. wide Types LOK-2, LOK-3

STEEL MASTERS INTERNATIONAL DEPENDABLE STEEL — 36 in. wide Types 2WH-36, 3WH-36. Units may be phos/painted or galvanized.

VALLEY JOIST • DECK — 24 or 36 in. wide Types WVC 1-1/2 or WVC 2

VERCO DECKING INC - A NUCOR CO — FORMLOK™ deck types PLB, B, BR, PLN3, N3, PLN, N, PLW2, W2, PLW3, W3. Units are min 24 in. wide and may be galvanized, phos./ptd., or mill finish. Units may be cellular or acoustical cellular, with the suffix "CD" or "CD-AC" added to the product name, respectively. All non-cellular deck may be vented or non-vented. 12 in. wide PLW2, W2, PLW3 or W3 units may be blended with 24 or 36 in. wide PLW2, W2, PLW3 or W3 units, respectively; or Types PLN3-CD, N3-CD, PLN3, N3.

VULCRAFT, DIV OF NUCOR CORP — 24, 30 or 36 in. wide Types 1.5VL, 1.5VLI, 1.5PLVLI, 1.5VLP, 1.5 VLR, 1.5PLVLP; 24 or 36 in. wide Types 1.5VLPA, 1.5PLVLPA, 2VLI, 2.0PLVLI, 2VLI, 3VLI, 3.0PLVLI, 3VLI, 2VLP, 2.0PLVLP, 3VLP, 3.0PLVLP, 2VLPA, 2.0PLVLPA, 3VLPA, 3.0PLVLPA. Types 1.5VL, 1.5VLI, 1.5PLVLI, 1.5 VLR, 1.5VLPA, 1.5PLVLPA, 2VLI, 2.0PLVLI, 2VLI, 3VLI, 3.0PLVLI, 3VLI units may be phos/ptd. 24 or 36 in. wide Types 2VLI, 3VLI units + + may be used for max 2 hr Restrained Assembly Rating. 36 in. wide Types 1.5 SB, 1.5 SBX; 24 or 36 in wide Types 2.0 SB, 3.0 SB, 36 in. wide Type High Strength 1.5 SBI, 36 in. wide Type High Strength 1.5 SBN; Units may be phos/ptd

Spacing of welds attaching units to supports shall be 12 in. OC for 12, 24, 36 in. wide units, four welds per sheet for 30 in. wide units. 6 in. OC for 18 in. wide and Sec. 12 units. Unless specified otherwise for specific units types, adjacent units button-punched or welded together 36 in. OC along side joints. For **3 Hr Rating** units with overlapping type side joints welded together 24 in. OC max.

When a superimposed load of 250 PSF is desired the spacing of welds or button-punches shall not exceed 24 in. OC along side joints.

+ + Side joints of Types 2VLI or 3VLI units may be fastened together with No. 8-3/4 in. long self-drilling Tek screws driven diagonally from the top side through the joint of the units at 36 in. O. C. max.

Alternate Construction — Non-composite units of the same type listed above may be used provided allowable loading is calculated on the basis of non-composite design.

The Unrestrained Assembly Rating is equal to the Unrestrained Beam Rating (See Item 6) for a max 3 Hr and is limited to the following units and limitations:

(a) 1-1/2, 2 and 3 in. deep, 24 or 36 in. wide, 22 MSG or thicker fluted with clear spans not more than 7 ft, 8 in.

(b) 1-1/2, 2 and 3 in. deep, 24 or 36 in. wide, 20 MSG or thicker fluted with clear spans not more than 8 ft, 8 in.

(c) 1-1/2 and 2 in. deep, 24 or 36 in. wide, 16 MSG or thicker fluted and 18/18 MSG or thicker cellular with clear spans not more than 9 ft, 11 in.

(d) 3 in. deep, 36 in. wide, 18 MSG or thicker fluted and 24 in. wide, 20/18 MSG or thicker cellular with clear spans not more than 13 ft, 2 in.
For assemblies utilizing 3-1/4 in. light weight concrete topping with a max Restrained Assembly Rating of 2 Hr, the Unrestrained Assembly Rating is equal to the Unrestrained Beam Rating (See Item 6) and is limited to the following floor units and spans:

(a) 1-1/2, 2 and 3 in. deep, 24 or 36 in. wide, 22 MSG fluted and 20/20 MSG cellular with clear spans not more than 9 ft, 6 in.

(b) 2 and 3 in. deep, 24 or 36 in. wide, 20 MSG fluted and 20/20 MSG cellular with clear spans not more than 10 ft, 0 in.

(c) 3 in. deep, 24 in. wide, 20 MSG fluted and 20/20 MSG cellular with clear spans not more than 13 ft, 2 in.

4A. **Steel Floor and Form Units* —** As an alternate to Item 4. Nom 8 or 9 in. deep composite, galv steel units. Min thickness 0.0375 inch (20 MSG). Side joints of adjacent units fully overlapping, fastened together by using 1-1/4 in. long self-drilling, self-tapping steel screws driven through Shear-Bond Clips (not shown) at 13-3/4 in. OC. Steel end closures flashings (not shown) made of min 0.056 inch thick (16 MSG) galv steel, fixed to the steel work before decking is placed.
In addition to the Steel Floor and Form Units, the following components are required:

(a) Welded Wire Fabric — 6 X 6 - Min wire thickness W2.9 X W2.9 slab reinforcement. As an alternate, max # 4 bars spaced 12-in. OC in both directions shall be used. When re-bars are used, the concrete slab thickness shall be increased a minimum 5/16 in.

(b) Rib Reinforcement —Min. #4 rebar. Min concrete cover below the steel reinforcement shall be 1-9/16 in. Reinforcement support chairs spaced at max 41-1/2 inches OC.

The flute areas above the beam/joist are to be : (1) filled with concrete, (2) filled with Spray-Applied Fire Resistive Material or (3) the beam/joist coated with Spray-Applied Fire Resistive Material installed as described in the design to thickness required when all cellular Steel Floor and Form Units are used.

See Design No. D989 for a typical illustration of the components. Consult the deck manufacturer for comprehensive load tables and design parameters referencing UL Design D989.

BAILEY METAL PRODUCTS LTD — Type COMSLAB™ 210 and COMSLAB™ 225, Steel End Closure Flashing

5. **Joint Cover —** (Use with fluted units optional — Not Shown) — 2 in. wide cloth adhesive tape applied following the contour of the units.

6. **Spray-Applied Fire Resistive Materials* —** Applied by spraying with water to the final thicknesses shown below. When fluted steel deck is used and the fire protection thickness selected is based on all fluted deck, the area between the steel deck and the top flange of the steel beam shall be filled. When fluted steel deck is used and the steel beam is sprayed with the thicknesses applicable to cellular of blended units, the area between the steel deck and the top flange of the steel beam shall be plugged. Beam surfaces must be clean and free of dirt, loose scale, and oil. Min average density of 13 pcf with min. individual density of 11 pcf for Types II, II HS, or DC/F. Min average and min individual densities of 22 pcf and 19 pcf, respectively, for type HP. For method of density determination, refer to Design Information Section. The thickness of the Spray-Applied Fire Resistive Materials on the Structural Members (Item 1, 1A, or 1B) shall be as follows:

Min Thkns Spray Applied Resistive Mtl, In

Restrained Assembly Rating Hr	Unrestrained Beam Rating Hr	Concrete Type	W6x9 When Deck Is All Fluted	W6x9 When Deck Is Blend or All Cellular	W8x28 When Deck Is All Fluted	W8x28 When Deck Is Blend or All Cellular	Joist Item 1A When Deck Is Fluted Cellular or Blend	Joist Item 1B When Deck Is Fluted Cellular or Blend
1	1	NW	9/16,15/16*	9/16, 1*	3/8,5/8*	3/8,11/16*	1*	—
1-1/2	1	NW	9/16,15/16*	9/16, 1*	3/8,5/8*	3/8,11/16*	1-9/16	—
2	1	NW	9/16,15/16*	9/16, 1*	3/8,5/8*	3/8,11/16*	2-1/16	—
2	2	NW	1-1/8	1-3/16	3/4	13/16	2-1/16	—
2	3	NW	1-3/4	1-7/8	1-3/16	1-5/16	—	3-1/4
3	1-1/2	NW	3/4	3/4	1/2	1/2	—	3-1/4
3	2	NW	1-1/8	1-3/16	3/4	13/16	—	3-1/4
3	3	NW	1-3/4	1-7/8	1-3/16	1-5/16	—	3-1/4
1	1	LW	9/16,15/16*	5/8, 1*	3/8,5/8*	7/16,11/16*	1-1/8+	—
1-1/2	1	LW	9/16,15/16*	5/8, 1*	3/8,5/8*	7/16,11/16*	1-3/4	—
2	1	LW	9/16,15/16*	5/8, 1*	3/8,5/8*	7/16,11/16*	2-1/4	—
2	2	LW	1-7/16	1-7/16	1	1	2-1/4	—
2	3	LW	2-1/4	2-5/16	1-9/16	1-5/8	—	3-1/4
3	1-1/2	LW	15/16	1	5/8	11/16	—	3-1/4
3	2	LW	1-7/16	1-7/16	1	1	—	3-1/4
3	3	LW	2-1/4	2-5/16	1-9/16	1-5/8	—	3-1/4

* This thickness applies when optional Item 12 or 13 are used over 3-1/4 in. light weight concrete topping.

** This thickness applies when optional Item 12 or 13 are used over 3-1/4 in. light weight concrete topping.

+ When bottom chords consist of 1 by 1 by 0.125 in. thick steel angles, the thickness of spray-applied fire resistive material shall be increased by 1/4 in. on the bottom chord only.

ISOLATEK INTERNATIONAL — Type D-C/F, HP, II or Type II HS. Investigated for exterior use. Type EBS or Type X adhesive/surface sealer optional.

6A. **Spray-Applied Fire Resistive Materials* —** Alternate to Item 6. See table below for appropriate thicknesses. When fluted steel deck is used and the fire protection thickness selected is based on all fluted deck, the area between the steel deck and the top flange of the steel beam shall be filled. When fluted steel deck is used and the steel beam is sprayed with the thicknesses applicable to cellular or blended units, the area between the steel deck and the top flange of the steel beam shall be plugged. Prepared by mixing with water and spray-applied in one or more coats to beam surfaces which must be clean and free of dirt, loose scale and oil. Min average density of 17.5 pcf with min individual value of 17.0 pcf. For method of density determination, see Design Information Section, Sprayed Material.

Restrained Assembly Rating Hr	Unrestrained Beam Rating Hr	W6x9 When Deck Is All Fluted	W6x9 When Deck Is Blend or All Cellular	W8x28 When Deck Is All Fluted	W8x28 When Deck Is Blend or All Cellular
1, 1-1/2, 2	1	1/2, 5/8*	1/2, 5/8*	5/16, 7/16*	5/16, 7/16*
2	2	1	1-3/16	11/16	13/16
2	3	1-9/16	1-7/8	1-1/16	1-5/16
3	1-1/2	3/4	13/16	1/2	9/16
3	2	1	1-3/16	11/16	13/16
3	3	1-9/16	1-7/8	1-1/16	1-5/16

* This thickness applies when optional Items 12, 13 are used over 3-1/4 in. light weight concrete topping.

ISOLATEK INTERNATIONAL — Type 280

6B. **Spray-Applied Fire Resistive Materials* —** Alternate to Items 6 and 6A. Prepared by mixing with water. Spray-applied in one or more coats to beam surfaces to a min final thickness as shown in the tables below. Beam surfaces must be clean and free of dirt, loose scale and oil. When fluted steel deck is used and the fire protection thickness selected is based on all fluted deck, the area between the steel deck and the top flange of the steel beam shall be filled. When fluted steel deck is used and the steel beam is sprayed with the thicknesses applicable to cellular or blended units, the area between the steel deck and the top flange of the steel beam shall be plugged.
Min average and min individual density of 15 pcf and 14 pcf respectively for Types 300, 300AC, 300 ES, 300 HS, 300 N, 3000, 3000ES, and SB. For Types 400, 400 AC and 400 ES min average and min individual density of 22 pcf and 19 pcf respectively. Min avg density of 44 pcf with min ind value of 40 pcf for Types M-II and TG. Min avg density of 47 pcf, with min individual value of 43 pcf for Type M-II/P. The thickness of the material on the Structural Members (Item 1 and 1C) shall be as follows:

Min Thkns Spray Applied Resistive Mtl, In

Restrained Assembly Rating Hr	Unrestrained Beam Rating Hr	W6x9 When Deck Is All Fluted	W6x9 When Deck Is Blend or All Cellular	W8x28 When Deck Is All Fluted	W8x28 When Deck Is Blend or All Cellular	Joist (Item 1C) When Deck Is Fluted Cellular or Blend
1	1	1/2 , 5/8*	1/2 , 5/8*	5/16, 7/16*	5/16, 7/16*	9/16+
1-1/2	1	1/2 , 5/8*	1/2 , 5/8*	5/16, 7/16*	5/16, 7/16*	1
2	1	1/2 , 5/8*	1/2 , 5/8*	5/16, 7/16*	5/16, 7/16*	1-3/8
2	2	1	1-3/16	11/16	13/16	1-3/8
2	3	1-9/16	1-7/8	1-1/16	1-5/16	2-1/4
3	1-1/2	3/4	13/16	1/2	9/16	2-1/4
3	2	1	1-3/16	11/16	13/16	2-1/4
3	3	1-9/16	1-7/8	1-1/16	1-5/16	2-1/4

* This thickness applies when optional Item 12 or 13 are used over 3-1/4 in. light weight concrete topping.

+ When bottom chords consist of 1 in. by 1 in. by 0.125 in. thick steel angles, the thickness of spray-applied fire resistive material shall be increased by 1/4 in. on the bottom chord only.

BERLIN CO LTD — Types 300, 300ES, 300N, SB, or 400; Type M-II, TG and M-II/P

GREENTECH ASIA PACIFIC SDN BDH — Types 300, 300ES, 300HS, or 400; Type M-II, or M-II/P

GREENTECH THERMAL INSULATION PRODUCTS MFG CO L L C — Types 300, 300AC, 400, or 400AC; Type M-II, TG and M-II/P

ISOLATEK INTERNATIONAL — Types 300, 300AC 300ES, 300HS, 300N, SB, 400, 400AC, 400ES, 3000 or 3000ES; Type M-II, TG and M-II/P

NEWKEM PRODUCTS CORP — Types 300, 300ES, 300N, 400, or SB; Type M-II, TG and M-II/P

6C. **Intumescent Fire-resistive Materials * —** As an alternate to Items 6 through 6B. For use with fluted steel floor and form units only. Min. size W8x24 or W6x12 beams shall be primed with a phenolic modified alkyd primer, a metal alkyd primer, an acrylic primer or an epoxy primer at a nominal thickness of 2 mil. Coating spray or brush applied in accordance with the manufacturer's instructions at the min dry thickness as shown in the table below. The thickness shown below includes the primer thickness. Flutes above beam to be completely filled with minimum 6 pcf mineral wool insulation, or the top flange of the beam to be protected with the same thickness of coating as required on the beam.

Minimum Dry Thickness mils	Minimum Dry Thickness mm	Beam Size	Unrestrained Beam Rating Hr	Restrained Assembly Rating Hr
53	1.34	W8x24	1	2
95	2.41	W8x24	1-1/2	3
73	1.83	W6x12	1	2
123	3.10	W6x12	1-1/2	3

BERLIN CO LTD — Type WB 3. Investigated for Interior General Purpose. Type WB 4, Investigated for Interior General Purpose. Type WB4, Investigated for Exterior Use with top coat as described in Item 6E

GREENTECH ASIA PACIFIC SDN BDH — Type WB 3. Investigated for Interior General Purpose. Type WB 4, Investigated for Interior General Purpose. Type WB4, Investigated for Exterior Use with top coat as described in Item 6E

GREENTECH THERMAL INSULATION PRODUCTS MFG CO L L C — Type WB 3. Investigated for Interior General Purpose. Type WB 4, Investigated for Interior General Purpose. Type WB4, Investigated for Exterior Use with top coat as described in Item 6E

ISOLATEK INTERNATIONAL — Type SprayFilm-WB 3 and Type WB 3. Investigated for Interior General Purpose. Type SprayFilm-WB 4 and Type WB 4, Investigated for Interior General Purpose. Type SprayFilm-WB 4 and Type WB4, Investigated for Exterior Use with top coat as described in Item 6E

NEWKEM PRODUCTS CORP — Type WB 3. Investigated for Interior General Purpose. Type WB 4, Investigated for Interior General Purpose. Type WB4, Investigated for Exterior Use with top coat as described in Item 6E

6D. **Intumescent Fire-resistive Materials * —** As an alternate to Items 6 through 6C. For use with normal weight concrete. Min. size WBx28 beams shall be primed with a phenolic modified alkyd primer a metal alkyd primer, an acrylic primer or an epoxy primer at a nominal thickness of 2 mil. Coating spray or brush applied in accordance with the manufacturer's instructions at the min dry thickness as shown in the table below. The thickness shown below includes the primer thickness. The top surface of the top flange where fluted units are used must be protected with the coating material at the same min dry thickness at a min distance of 1 in. (25 mm) inward from the flange tip on both sides of the beam. Mineral wool insulation optional above top surface of the beam.

Minimum Dry Thickness mils	Minimum Dry Thickness mm	Steel Floor Units	Unrestrained Beam Rating Hr	Restrained Assembly Rating Hr
103	2.62	Fluted or Cellular	1-1/2	2
179	4.55	Cellular	1-1/2	3
341	8.67	Cellular	2	3

BERLIN CO LTD — Type WB 3. Investigated for Interior General Purpose. Type WB 4, Investigated for Interior General Purpose. Type WB 4, Investigated for Exterior Use with top coat as described in Item 6E

GREENTECH ASIA PACIFIC SDN BDH — Type WB 3, Investigated for Interior General Purpose. Type WB 4, Investigated for Interior General Purpose. Type WB 4, Investigated for Exterior Use with top coat as described in Item 6E

GREENTECH THERMAL INSULATION PRODUCTS MFG CO L L C — Type WB 3, Investigated for Interior General Purpose. Type WB 4, Investigated for Interior General Purpose. Type WB 4, Investigated for Exterior Use with top coat as described in Item 6E

ISOLATEK INTERNATIONAL — Type SprayFilm-WB 3 and Type WB 3. Investigated for Interior General Purpose. Type SprayFilm-WB 4 and Type WB 4, Investigated for Interior General Purpose. Type SprayFilm- WB 4 and Type WB 4, Investigated for Exterior Use with top coat as described in Item 6E

NEWKEM PRODUCTS CORP — Type WB 3. Investigated for Interior General Purpose. Type WB 4. Investigated for Interior General Purpose. Type WB4, Investigated for Exterior Use with top coat as described in Item 6E

6E. **Top Coat —** Type SprayFilm — TOPSEAL and Type TOPSEAL required for Exterior Use, applied at a minimum dry thickness of 14 mils (0.34 mm) over the intumescent material.
See Classification information in the **Mastic and Intumescent Coating** (CDWZ) category, Isolatek International, for mixing requirements.

6F. **Intumescent Fire-resistive Materials * —** As an alternate to Items 6 through 6D. For use with normal weight or light weight concrete and fluted steel floor and form units only. Min size WBx24 beams shall be primed with a phenolic modified alkyd primer at a thickness of 2 mils or a epoxy primer at a nominal thickness of 1 mil. Coating spray or brush applied in accordance with the manufacturer's instructions at the thicknesses shown below. The thickness includes the thickness of primer. The top surface of the top flange where fluted units are used must be protected with the coating material at the same min dry thickness or filled with nominal 4 pcf mineral wool.

Minimum Dry Thickness mils	Minimum Dry Thickness mm	Beam Size	Unrestrained Beam Rating Hr	Restrained Assembly Rating Hr
35	0.88	WBx24	1	2
66	1.68	WBx24	1-1/2	3

GREENTECH ASIA PACIFIC SDN BDH — Type WB-5. Investigated for Interior General Purpose

GREENTECH THERMAL INSULATION PRODUCTS MFG CO L L C — Type WB-5. Investigated for Interior General Purpose

ISOLATEK INTERNATIONAL — Type WB-5. Investigated for Interior General Purpose

NEWKEM PRODUCTS CORP — Type WB 5, Investigated for Interior Conditioned Space and Interior General Purpose.

6G. **Sprayed Fiber Insulation* —** (Optional, Not Shown) — Spray applied fiber insulation applied over Spray-Applied Fire Resistive Material (Item 6) on both steel floor and form units (Item 4) and supports (Item 1). Sprayed fiber insulation may be over Spray-Applied Fire Resistive Material (Item 6) according to the following tables:

Allowable Spray-Applied Fiber Insulation Thickness Over Beam

Installed SFRM Thickness (in.) on Beam	SFRM Density (pcf)						
	13	15	17.5	22	22 (Type HP)	44	47
3/8	6-3/4	4	4-11/16	5-7/8	8	8	8
7/16	6-1/2	3-3/4	4-3/8	5-1/2	8	8	8
1/2	6-1/4	3-1/2	4-1/16	5-1/8	8	8	8
9/16	6-1/16	3-3/16	3-3/4	4-11/16	8	8	8
5/8	5-13/16	2-15/16	3-7/16	4-5/16	8	8	8
11/16	5-9/16	2-11/16	3-1/8	3-15/16	8	8	8
3/4	5-5/16	2-7/16	2-13/16	3-9/16	8	8	8
13/16	5-1/8	2-1/8	2-1/2	3-1/8	8	8	8
1	4-7/16	1-5/16	1-9/16	1-15/16	7-7/16	6-5/16	6-11/16
1-1/16	4-3/16	1-1/16	1-1/4	1-9/16	7-1/16	5-1/2	5-7/8
1-3/16	3-11/16	9/16	5/8	13/16	6-5/16	3-15/16	4-3/16
1-5/16	3-1/4	0	0	0	5-1/2	2-3/8	2-1/2
1-9/16	2-5/16	0	0	0	3-15/16	0	0
1-5/8	2-1/16	0	0	0	3-9/16	0	0

Allowable Spray-Applied Fiber Insulation Thickness Over Joist

Installed SFRM Thickness (in.) on Joist	SFRM Density (pcf)					
	13	15	22	22 (Type HP)	44	47
9/16	8	8	8	8	8	8
13/16	8	8	8	8	8	8
1	8	8	8	8	8	8
1-1/8	7-7/8	7-1/2	8	8	8	8
1-1/4	7-7/16	6-15/16	8	8	8	8
1-3/8	6-15/16	6-7/16	8	8	8	8
1-9/16	6-1/4	5-5/8	8	8	8	8
1-3/4	5-9/16	4-13/16	7-1/16	8	8	8
2-1/16	4-7/16	3-1/2	5-1/8	7-7/16	8	8
2-1/4	3-11/16	2-11/16	3-15/16	6-5/16	7-7/8	8
3-1/4	0	0	0	0	0	0

INTERNATIONAL CELLULOSE CORP — Type K13, URE-K, or Sonospray FC

6H. **Sprayed Fiber Insulation* —** (Optional, Not Shown) — Spray applied fiber insulation, Classified for Noncombustible Building Materials (BCXK), having a maximum applied density of 3.5 pcf, applied over Spray-Applied Fire Resistive Material (Item 6) on both steel floor and form units (Item 4) and supports (Item 1). Sprayed fiber insulation may be over Spray-Applied Fire Resistive Material (Item 6) according to the following tables:

Allowable Spray-Applied Fiber Insulation Thickness Over Beam

Installed SFRM Thickness (in.) on Beam	SFRM Density (pcf)						
	13	15	17.5	22	22 (Type HP)	44	47
5/16	5	5	5	5	5	5	5
3/8	5	5	5	5	5	5	5
7/

\\tet-file1\Users\tara.chong_TETR\Documents\12498-A-UC_tara.chong.rvt
11" x 17"
PLOT DATE: 11/10/2025 9:10:17 AM

DESIGN NO. L524

Unrestrained Assembly Rating — 1 Hr.
Unrestrained Beam Rating — 1 Hr.
This design was evaluated using a load design method other than the Limit States Design Method (e.g., Working Stress Design Method). For jurisdictions employing the Limit States Design Method, such as Canada, a load restriction factor shall be used — See Guide BXUV or BXUV7
*** Indicates such products shall bear the UL or cUL Certification Mark for jurisdictions employing the UL or cUL Certification (such as Canada), respectively.**

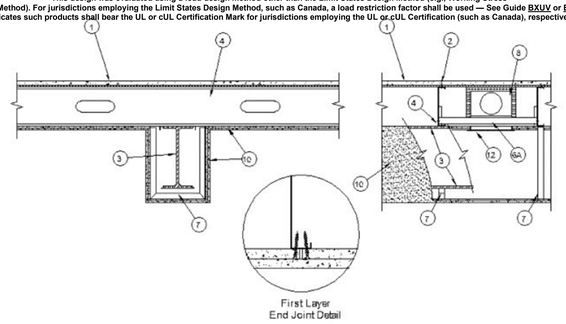

1. **Flooring System —** The flooring system shall consist of one of the following:

System No. 1

Finish Flooring — Min 19/32 in. thick wood structural panels, min grade "Underlayment" or "Single-Floor". Face grain of plywood or strength axis of panel to be perpendicular to joists with joints staggered. Long edges shall be T & G.

System No. 2

Subflooring — Min 15/32 in. thick plywood or min 7/16 in. thick oriented strand board (OSB) wood structural panels, min grade "C-D" or "Sheathing". Face grain of plywood or strength axis of panel to be perpendicular to joists with joints staggered.
Vapor Barrier — (Optional) - Nom 0.010 in. thick commercial rosin-sized building paper.
Finish Flooring — Min 19/32 in. thick wood structural panels, min grade "Underlayment" or "Single-Floor". Face grain of plywood or strength axis of panel to be perpendicular to joists with joints staggered. Long edges shall be T & G.

System No. 3

Subflooring — Min 15/32 in. thick wood structural panels, min grade "C-D" or "Sheathing". Face grain of plywood or strength axis of panel to be perpendicular to joists with joints staggered.
Vapor Barrier — (Optional) - Nom 0.010 in. thick commercial asphalt saturated felt.
Finish Flooring - Floor Topping Mixture* — Min 3/4 in. thickness of floor topping mixture having a minimum compressive strength of 1800 psi. Refer to manufacturer's instructions accompanying the material for specific mix design.
UNITED STATES GYPSUM CO — Types LRK, HSLRK, CSD
USG MEXICO S A DE C V — Types LRK, HSLRK, CSD
Floor Mat Materials* — (Optional) - Floor mat material loose laid over the subfloor. Refer to manufacturer's instructions regarding the minimum thickness of floor topping over each floor mat material.
UNITED STATES GYPSUM CO — Types SAM, LEVELROCK® Brand Sound Reduction Board, LEVELROCK® Brand Floor Underlayment SRM-25
Alternate Floor Mat Materials* — (Optional) - Nom 3/8 in. thick floor mat material loose laid over the subfloor. Floor topping thickness shall be as specified under **Floor Topping Mixture.**
GRASSWORX L L C — Type SC50

System No. 4

Subflooring — Min 19/32 in. thick wood structural panels, min grade "C-D" or "Sheathing". Face grain of plywood or strength axis of panel to be perpendicular to joists with joints staggered.
Vapor Barrier — (Optional) - Nom 0.030 in. thick commercial asphalt saturated felt.
Finish Flooring - Floor Topping Mixture* — Min 1-1/2 in. thickness of floor topping mixture having a min compressive strength of 1000 psi and a cast density of 100 plus or minus 5 pcf. Foam concentrate mixed 40:1 by volume with water and expanded at 100 psi through nozzle. Mixture shall consist of 1.4 cu feet of preformed foam concentrate to 94 lbs Type I Portland cement, 300 lbs of sand with 5-1/2 gal of water.
ELASTIZELL CORP OF AMERICA — Type FF.

System No. 5

Subflooring — Min 19/32 in. thick wood structural panels, min grade "C-D" or "Sheathing". Face grain of plywood or strength axis of panel to be perpendicular to joists with joints staggered.
Vapor Barrier — (Optional) - Nom 0.030 in. thick commercial asphalt saturated felt.
Floor Mat Materials* — (Optional)— Floor mat material nom 5/64 in. (2mm) thick adhered to subfloor with Hacker Floor Primer. Primer to be applied to the surface of the mat prior to the placement of a min 1 in. of floor-topping mixture.
HACKER INDUSTRIES INC — Type Hacker Sound-Mat.
Alternate Floor Mat Materials - (Optional) — Floor mat material nom 1/4 in. (6mm) thick adhered to subfloor with Hacker Floor Primer. Primer to be applied to the surface of the mat prior to the placement of a min 1-1/4 in. (32mm) of floor-topping mixture.
HACKER INDUSTRIES INC — Type Hacker Sound-Mat II.
Alternate Floor Mat Materials - (Optional) — Floor mat material nom 1/8 in. (3mm) thick loose laid over the subfloor. Floor topping thickness shall be a min of 3/4 in. (19mm)
HACKER INDUSTRIES INC — FIRM-FILL SCM 125
Alternate Floor Mat Materials - (Optional) — Floor mat material nom 1/4 in. (6mm) thick loose laid over the subfloor. Floor topping thickness shall be a min of 1 in. (25mm)
HACKER INDUSTRIES INC — Type FIRM-FILL SCM 250, Quiet Qurl 55/025
Alternate Floor Mat Materials - (Optional) — Floor mat material nom 3/8 in. (10mm) thick loose laid over the subfloor. Floor topping thickness shall be a min of 1-1/4 in. (32mm)
HACKER INDUSTRIES INC — FIRM-FILL SCM 400, Quiet Qurl 60/040
Alternate Floor Mat Materials - (Optional) — Floor mat material nom 3/4 in. (19mm) thick loose laid over the subfloor. Floor topping thickness shall be a min of 1-1/2 in. (38mm)
HACKER INDUSTRIES INC — Type FIRM-FILL SCM 750, Quiet Qurl 65/075
Metal Lath (Optional) — For use with 3/8 in. (10 mm) floor mat materials, 3/8 in. expanded steel diamond mesh, 3.4 lbs/sq yd placed over the floor mat material. Hacker Floor Primer to be applied prior to the placement of the metal lath. When metal lath is used, floor topping thickness a nom 1-1/4 in. over the floor mat.
Finish Flooring - Floor Topping Mixture* — Min 3/4 in. thickness of floor topping mixture having a min compressive strength of 1100 psi. Mixture shall consist of 6.8 gal of water to 80 lbs of floor topping mixture to 1.9 cu ft of sand.
HACKER INDUSTRIES INC — Firm-Fill Gypsum Concrete, Firm-Fill 2010, Firm-Fill 3310, Firm-Fill 4010, Firm-Fill High Strength, Gyp-Span Radiant.

System No. 6 Deleted.

System No. 7

Subflooring — Min 19/32 in. thick wood structural panels, min grade "C-D" or "Sheathing". Face grain of plywood or strength axis of panel to be perpendicular to joists with joints staggered.
Vapor Barrier — (Optional) - Nom 0.030 in. thick commercial asphalt saturated felt.
Finish Flooring - Floor Topping Mixture* — Min 3/4 in. thickness of floor topping mixture having a min compressive strength of 1000 psi.
Mixture shall consist of 5 to 8 gal of water to 80 lbs of floor topping mixture to 2.1 cu ft of sand.
ULTRA QUIET FLOORS — Types UQF-A, UQF-Super Blend, UQF-Plus 2000.

System No. 8

Subflooring — Min 15/32 in. thick wood structural panels, min grade "C-D" or "Sheathing". Face grain of plywood or strength axis of panel to be perpendicular to joists with joints staggered.
Vapor Barrier — (Optional) - Nom 0.030 in. thick commercial asphalt saturated felt.
Finish Flooring - Floor Topping Mixture* — Min 3/4 thickness of floor topping mixture having a minimum compressive strength of 1500 psi. Refer to manufacturer's instructions accompanying the material for specific mix design.
MAXXON CORP — Type Maxxon Standard and Maxxon High Strength
Floor Mat Materials* — (Optional) - Floor mat material loose laid over the subfloor.
MAXXON CORP — Type Encapsulated Sound Mat..
Floor Mat Reinforcement — (Optional) - Refer to manufacturer's instructions regarding minimum thickness of floor topping for use with floor mat reinforcement.
Metal Lath — (Optional) — 3/8 in. expanded galvanized steel diamond mesh, 3.4 lbs/sq yd loose laid over the floor mat material.
Fiber Glass Reinforcement - (Optional, Not Shown) - 0.015 in. thick PVC coated non-woven fiberglass mesh, 0.368 lbs/sq yd loose laid over the floor mat material.

System No. 9

Subflooring — Min 15/32 in. thick wood structural panels, min grade C-D or Sheathing. Face grain of plywood or strength axis of panel to be perpendicular to joists with joints staggered.
Vapor Barrier — (Optional) Nom 0.030 in. thick commercial asphalt saturated felt.
Finish Flooring — Floor Topping Mixture* — Min 3/4 in. thickness of floor topping mixture having a minimum compressive strength of 1500 psi. Refer to manufacturer's instructions accompanying the material for specific mix design.
FORMULATED MATERIALS LLC — Types FR-25, FR-30, and SiteMix
Alternate Floor Mat Material* — (Optional) Floor mat material nominal 2 - 9.5 mm thick loose laid over the subfloor. Floor topping thickness shall be a minimum of 3/4 in.
FORMULATED MATERIALS LLC — Types M1, M2, M3, Elite, Duo, R1, and R2

System No. 10

Subflooring — Min 1 by 6 in. T & G lumber fastened diagonally to joists, or min 15/32 in. thick plywood or min 7/16 in. thick oriented strand board (OSB) wood structural panels, min grade "C-D" or "Sheathing". Face grain of plywood or strength axis of panel to be perpendicular to joists with joints staggered.
Finish Flooring - Mineral and Fiber Board* — Min 1/2 in. thick, supplied in sizes ranging from 3 ft by 4 ft to 8 ft by 12 ft. All joints to be staggered a min of 12 in. with adjacent sub-floor joints.
HOMASOTE CO — Type 440-32 Mineral and Fiber Board

System No. 11

Subflooring — Min 15/32 in. thick wood structural panels, min grade "C-D" or "Sheathing". Face grain of plywood or strength axis of panel to be perpendicular to joists with joints staggered.
Vapor Barrier — (Optional) - Nom 0.030 in. thick commercial asphalt saturated felt.
Finish Flooring - Floor Topping Mixture* — Min 1-1/2 in. thickness of floor topping mixture having a min compressive strength of 1000 psi and a cast density of 100 plus or minus 5 pcf. Foam concentrate mixed 40:1 by volume with water and expanded at 100 psi through nozzle. Mixture shall consist of 1.2 cu feet of preformed foam concentrate to 94 lbs Type I Portland cement, 300 lbs of sand with 5-1/2 gal of water.
AERIX INDUSTRIES — Floor Topping Mixture

System No. 12

Subflooring — Min 15/32 in. thick wood structural panels, min grade "C-D" or "Sheathing". Face grain of plywood or strength axis of panel to be perpendicular to joists with joints staggered.
Vapor Barrier — (Optional) - Nom 0.030 in. thick commercial asphalt saturated felt.
Finish Flooring - Floor Topping Mixture* — Min 3/4 or 1 in. thickness of floor topping mixture for 19/32 or 15/32 in. thick wood structural panels respectively, having a min compressive strength of 1000 psi. Refer to manufacturer's instructions accompanying the material for specific mix design.
ARCOSA SPECIALTY MATERIALS — AccuCrete® Types NexGen, Green, Prime and PrePour, AccuRadiant®, AccuLevel® Types G40, G50 and SD30
Alternate Floor Mat Material* - (Optional) - Floor mat material nominal 2 - 9.5 mm thick loose laid over the subfloor. Floor topping shall be a min of 3/4 in. or 1 in. thickness of floor topping mixture for 19/32 or 15/32 in. thick wood structural panels respectively.
ARCOSA SPECIALTY MATERIALS — AccuQuiet® Types D13, D-18, D25, DX38, EM.125, EM.125S, EM.250, EM.250S, EM.375, EM.375S, EM.750, and EM.750S.

System No. 13

Subflooring — 15/32 or 19/32 in. thick wood structural panels, min. grade "C-D" or "Sheathing". Face grain of plywood or strength axis of panels to be perpendicular to joists with joints staggered.
Vapor Barrier — (Optional) — Nom 0.030 in. thick commercial asphalt saturated felt.
Finish Flooring — Floor Topping Mixture* — Min 3/4 or 1 in. thickness of floor topping mixture for 19/32 or 15/32 in. thick wood structural panels respectively, having a min compressive strength of 2100 psi. Refer to manufacturer's instructions accompanying the material for specific mix design.

System No. 14

Subflooring — Min 15/32 in. thick wood structural panels, min grade "C-D" or "Sheathing". Face grain of plywood or strength axis of panels to be perpendicular to the joists with joints staggered.
Vapor Barrier — (Optional) - Commercial asphalt saturated felt, 0.030 in. thick.
Vapor Barrier — (Optional) - Nom 0.010 in. thick commercial rosin-sized building paper.
Finish Flooring* — Min 3/4 in. thickness of any Floor Topping Mixture bearing the UL Classification Marking as to Fire Resistance. See Floorand Roof-Topping Mixtures (CCOX) category for names of Classified Companies.
Floor Mat Materials* — (Optional) - Nom. 1/4 in. thick loose laid over the subfloor. Floor topping thickness shall be a minimum of 3/4 in.
KEENE BUILDING PRODUCTS CO INC — Type Quiet Qurl 55/025 and Quiet Qurl 55/025 N
Alternate Floor Mat Materials* — (Optional) - Floor mat material Nom. 3/8 in. thick loose laid over the subfloor. Floor topping thickness shall be a minimum of 1 in.
KEENE BUILDING PRODUCTS CO INC — Type Quiet Qurl 60/040 and Quiet Qurl 60/040 N
Alternate Floor Mat Materials* — (Optional) - Floor mat material Nom. 3/4 in. thick loose laid over the subfloor. Floor topping thickness shall be a minimum of 1-1/2 in.
KEENE BUILDING PRODUCTS CO INC — Type Quiet Qurl 65/075, Quiet Qurl 65/075 N
Alternate Floor Mat Materials* — (Optional) - Floor mat material Nom. 1/8 in. thick loose laid over the subfloor. Floor topping thickness shall be a minimum of 3/4 in.
KEENE BUILDING PRODUCTS CO INC — Type Quiet Qurl 52/013 and Quiet Qurl 52/013 N
Alternate Floor Mat Materials* — (Optional) - Floor mat material Nom. 1/4 in. entangled net core with a compressible fabric attached to the bottom loose laid over the subfloor. Floor topping thickness shall be a minimum of 1 in.
KEENE BUILDING PRODUCTS CO INC — Quiet Qurl 55/025 MT and Quiet Qurl 55/025 N MT

System No. 15

Subflooring — Min 23/32 in. thick T&G wood structural panels, min grade "Underlayment" or "Single-Floor". Face grain of plywood or strength axis of panels to be perpendicular to the trusses with end joints staggered 4 ft. Panels secured to trusses with construction adhesive and No. 6d ringed shank nails spaced 12 in. OC along each truss. Staples having equal or greater withdrawal and lateral resistance strength may be substituted for the 6d nails.
Gypsum Board* — One layer of nom 5/8 in. thick, 4 ft wide gypsum board, installed with long dimension perpendicular to joists. Gypsum board secured with 1 in. long No. 6 Type W bugle head steel screws spaced 12 in. OC and located a min of 1-1/2 in. from side and end joints. The joints of the gypsum board are to be staggered a minimum of 12 inches from the joints of the subfloor.
GEORGIA-PACIFIC GYPSUM L L C — Type DS
Floor Mat Materials* — (As an alternate to the single layer gypsum board) - Floor mat material loose laid over the subfloor.
MAXXON CORP — Type Encapsulated Sound Mat.
Gypsum Board* — (For use when floor mat is used) Two layers of nom 5/8 in. thick, 4 ft wide gypsum board, installed with long dimension perpendicular to joists on top of the floor mat material. Gypsum board secured to each other with 1 in. long No. 6 Type G bugle head steel screws spaced 12 in. OC and located a min of 1-1/2 in. from side and end joints. The joints of the gypsum board are to be staggered a minimum of 12 inches in between layers and from the joints of the subfloor.
GEORGIA-PACIFIC GYPSUM L L C — Type DS

System No. 16

Subflooring — Min 15/32 in. thick wood structural panels, min grade "C-D" or "Sheathing". Face grain of plywood or strength axis of panel to be perpendicular to joists with joints staggered.
Vapor Barrier — (Optional) — Nom 0.030 in. thick commercial asphalt saturated felt.
Finish Flooring - Floor Topping Mixture* — Min 3/4 or 1 in. thickness of floor topping mixture for 19/32 or 15/32 in. thick wood structural panels respectively, having a min compressive strength of 1000 psi. Refer to manufacturer's instructions accompanying the material for specific mix design.
DEPENDABLE LLC — GSL M3.4, GSL K2.6, GSL-CSD and GSL RH
Floor Mat Materials* — (Optional) - Nom. 1/4 in. thick loose laid over the subfloor. Floor topping thickness shall be a minimum of 3/4 in.
KEENE BUILDING PRODUCTS CO INC — Type Quiet Qurl 55/025 and Quiet Qurl 55/025 N
Alternate Floor Mat Materials* — (Optional) - Floor mat material Nom. 3/8 in. thick loose laid over the subfloor. Floor topping thickness shall be a minimum of 1 in.
KEENE BUILDING PRODUCTS CO INC — Type Quiet Qurl 60/040 and Quiet Qurl 60/040 N
Alternate Floor Mat Materials* — (Optional) - Floor mat material Nom. 3/4 in. thick loose laid over the subfloor. Floor topping thickness shall be a minimum of 1-1/2 in.
KEENE BUILDING PRODUCTS CO INC — Type Quiet Qurl 65/075, Quiet Qurl 65/075 N
Alternate Floor Mat Materials* — (Optional) - Floor mat material Nom. 1/8 in. thick loose laid over the subfloor. Floor topping thickness shall be a minimum of 3/4 in.
KEENE BUILDING PRODUCTS CO INC — Type Quiet Qurl 52/013 and Quiet Qurl 52/013 N
Alternate Floor Mat Materials* — (Optional) - Floor mat material Nom. 1/4 in. entangled net core with a compressible fabric attached to the bottom loose laid over the subfloor. Floor topping thickness shall be a minimum of 1 in.
KEENE BUILDING PRODUCTS CO INC — Quiet Qurl 55/025 MT and Quiet Qurl 55/025 N MT

System No. 17

Subflooring — Min 15/32 in. thick plywood or 7/16 in. thick oriented strand board (OSB) wood structural panels, min grade "C-D" or "Sheathing". Face grain of plywood or strength axis of panels to be perpendicular to the joists with joints staggered.
Wall and Partition Facings and Accessories* - Sound Barrier (Optional) — Acoustic Sleeper pads stapled to the top of the subfloor, the bottom of the finish floor, or to 5/16 in. thick by 1-1/2 in. wide wood strips and centered over joists. Acoustic Sleeper pads are to be spaced appropriately so that the finish floor panels are fastened through Acoustic Sleeper pads to the joist. **STC**
ARCHITECTURAL PRODUCTS L L C DBA STC SOUND CONTROL — Acoustic Sleeper
Finish Floor — Min 19/32 in. thick wood structural panels, min grade "Underlayment" or "Single-Floor". Face grain of plywood or strength axis of panel to be perpendicular to joists with joints staggered. Butt joints of panels have the option of being sealed with any UL Classified caulk or sealant found under - Fill, Void or Cavity Materials* (XHHW).

System No. 18

Subflooring — Min 19/32 in. thick wood structural panels, min grade "C-D" or "Sheathing". Face grain of plywood or strength axis of panel to be perpendicular to joists with joints staggered.
Finish Flooring - Floor Topping Mixture* — Min 1 in. thickness of floor topping mixture having a min compressive strength of 4500 psi. Refer to manufacturer's instructions accompanying the material for specific mix design.
SIKA DEUTSCHLAND GMBH — Type SCHONOX AP Rapid Plus

System No. 19

Finish Flooring — 15/32 or 19/32 in. thick wood structural panels, min. grade "C-D" or "Sheathing". Face grain of plywood or strength axis of panels to be perpendicular to joists with joints staggered.
Vapor Barrier — (Optional) - Commercial asphalt saturated felt, 0.030 in. thick.
Vapor Barrier — (Optional) - Nom 0.010 in. thick commercial rosin-sized building paper.
Finish Flooring - Floor Topping Mixture* — Min 3/4 in. thickness of any Floor Topping Mixture bearing the UL Classification Marking as to Fire Resistance. See Floor- and Roof-Topping Mixtures (CCOX) category for names of Classified Companies.
Floor Mat Materials* — (Optional, Not Shown) - Floor mat material loose laid over the subfloor. Refer to manufacturer's instructions regarding the minimum thickness of floor topping over each floor mat material.
LOW & BONAR INC — EnkaSonic® by Colbond a member of the Low & Bonar group Types 125, 250, 250 Plus, 400, 400 Plus, 750, and 750 Plus.
Floor Mat Reinforcement — (Optional) - Refer to manufacturer's instructions regarding minimum thickness of floor topping for use with floor mat reinforcement.
Metal Lath — (Optional) — Expanded steel diamond mesh, 2.5 lb / sq yd loose laid over floor mat material.
Fiberglass Mesh Reinforcement — (Optional) — Coated non-woven glass fiber mesh grid loose laid over floor mat material.
2. **Flooring Fasteners —** (Not Shown) - The subflooring (first layer) of each floor system and finish flooring of System No. 1 are to be fastened to the steel joists with Type S12 by 1-15/16 in. long self-drilling, pilot point, steel screws. The screws are to be spaced 6 in. OC around the perimeter of the floor and at all end (butt) joints of the panels. Spacing in the field to be 10 in. OC. For flooring System No. 2, the finish flooring is to be fastened to the subflooring with Type S12 by 2 in. long steel screws spaced 6 in. OC around the perimeter of the floor and at all end (butt) joints of the finish flooring panels. Spacing in the field to be 10 in. OC with rows of screws spaced 16 in. OC.
3. **Structural Steel Member —** Min W8 x 15 wide flange steel beam.
4. **Steel Joists —** The joists are channel-shaped, min 7 in. deep with min 1-5/8 in. wide flanges and 1/2 in. long stiffening flanges. The joists are fabricated from min No. 18 MSG galv steel. Min yield strength of steel is either 33,000 or 40,000 psi with corresponding max working stress of 20,000 and 24,000 psi. Joists spaced max 24 in. OC. At joist splices bearing on supports, joists are overlapped a min of 3 in. **When ceiling damper (Item 6) is used, min joist depth is 14 in.**
5. **Joist Stiffeners —** (Not Shown) - Channel-shaped stiffeners, made from min No. 18 MSG galv steel. Stiffeners are 6-13/16 in. long, 3-1/2 in. deep with 1-5/8 in. flanges and 1/2 in. stiffening flanges. The joist stiffeners are used at all bearing locations of the joists.
6. **Joist Bridging —** (Not Shown) - Installed immediately after joists are erected and before construction loads are applied. The bridging consisting of joist section cut to length and placed between outer supports, adjacent to openings and at mid-span with 8 ft OC max spacing. Bridging channels are screw-attached at each end to joist webs using angle clips. V-bracing of 1-1/2 in. by 20-gal galvanized steel is screw-attached to bottom joist flange between bridging channels.

6A. **Horizontal Joist Bridging —** Used in lieu of item 6 in same joist bay as ceiling damper (Item 8), when ceiling damper is employed. Joist section cut to length and secured to joists above bottom flanges with Type S12 screws and 1-1/2 by 1-1/2 in. No. 18 MSG galv steel angles.

7. **Beam Cage —** The cage used to support the gypsum board beam protection is fabricated from No. 24 MSG electrogalvanized steel angle with 7/8 by 1-3/8 in. legs and No. 25 MSG, electrogalvanized steel channel studs, 2-1/2 in. wide with 1 in. legs. Angles are fastened to the steel joists using 1/2 in. pan head steel sheet metal screws.
8. **Ceiling Damper* —** (Optional) - Max nom area shall be 198 sq in. Max rectangular size shall be 12 in. wide by 16-1/2 in. long. Max height of damper shall be 8-3/4 in. Aggregate damper openings shall not exceed 99 sq in. per 100 sq ft of ceiling area. Damper installed in accordance with the manufacturers installation instructions provided with the damper. A steel grille (Item 13) shall be installed in accordance with installation instructions.
RUSKIN COMPANY — Model CFD7
9. **Ceiling Damper Support —** (Not Shown) - Provided with ceiling damper. Support secured to ceiling damper and steel joists in accordance with installation instructions provided with ceiling damper.
10. **Gypsum Board* —** For Ceiling - Two layers of 1/2 in. thick gypsum board installed with long dimensions perpendicular to joists. Base layer attached to steel joists using 1 in. long, Type S12 bugle head steel screws spaced 8 in. OC along butt joints and 12 in. OC in field along the joists. Butt joints to occur beneath joists with screws located 1/2 in. for the butt joints. Outer layer attached to assembly using 1-1/2 in. long, Type G bugle head steel screws spaced 8 in. OC along butt joints and with 1-5/8 in. long, Type S12 bugle head steel screws spaced 12 in. OC in the field along the joists. Butt joints of outer layer to occur between joists with screws located 3/4 in. from the butt joints. Edge joints to be staggered between layers. **For Beam -** Two layers of 1/2 in. thick gypsum board fastened to beam cage. Inner layer secured using 1 in. long, Type S12 bugle head steel screws spaced 12 in. OC and outer layer fastened to cage using 1-5/8 in. long, Type S12 bugle head steel screws spaced 12 in. OC. Joints are to be staggered between layers.
AMERICAN GYPSUM CO — Type AG-C
CABOT MANUFACTURING ULC — Type C
CERTAINTEED GYPSUM INC — Type C
CGC INC — Type C, IP-X2
CERTAINTEED GYPSUM INC — Type LGFC-C/A
GEORGIA-PACIFIC GYPSUM L L C — Types 5, DAPC, TG-C
NATIONAL GYPSUM CO — Types eXP-C, FSK-C, FSW-C
PABCO BUILDING PRODUCTS L L C, DBA PABCO GYPSUM — Type PG-C
PANEL REY S A — Type PRC
THAI GYPSUM PRODUCTS PCL — Type C
THE SIAM GYPSUM INDUSTRY (SONGKHLA) CO — Type C
UNITED STATES GYPSUM CO — Type C, IP-X2
USG BORAL DRYWALL SFZ LLC — Type C
USG MEXICO S A DE C V — Type C, IP-X2

10A. **Gypsum Board* —** (Not Shown)- As an alternate to Item 12. Two layers of nom 5/8 in. thick by 48 in. wide gypsum board installed as described in Item 10. **CGC INC** — Type ULIX
UNITED STATES GYPSUM CO — Type ULIX

11. **Steel Framing Members* —** As an alternate to the direct attachment of the Gypsum Board* (Item 10), Steel Framing Members* and Gypsum Board* (Item 12) may be installed beneath the bottom flange of the steel beam.
a. **Main Runners —** Nom 12 ft long, with 15/16 in. or 1-1/2 in. wide face, spaced 4 ft OC, installed perpendicular to steel beam. Main runners hung a min of 2 in. below bottom chord of steel beam and secured to steel joists with No. 12 SWG galv steel wire, spaced a max of 48 in. OC.
b. **Cross Tees or Channels —** Nom 4 ft long cross tees, with 15/16 in. or 1-1/2 in. wide face, or nom 4 ft long cross channels, with 1-1/2 in. wide face, either spaced 16 in. OC, installed perpendicular to the main runners. Additional cross tees or channels used 8 in. from each side of butted gypsum board end joints. The cross tees or channels may be riveted or screw-attached to the wall angle or channel to facilitate the ceiling installation.
c. **Wall Angles or Channels —** Used to support steel framing member ends and for screw-attachment of the gypsum board. Painted or galvanized steel angles with 1 in. legs or channels with 1 in. legs and 1-9/16 in. deep, attached to walls at perimeter of ceiling with fasteners 16 in. OC.

CGC INC — Type DGL or RX.
USG INTERIORS LLC — Type DGL or RX.

1. **Gypsum Board* —** Two layers of nom 1/2 in. thick by 48 in. wide gypsum board for use with **Steel Framing Members***. Base layer installed with long dimension perpendicular to cross tees with side joints centered along main runners and end joints centered along cross tees. Base layer fastened to cross tees with 1-1/4 in. long Type S bugle-head steel screws spaced 8 in. OC along butted end joints and 12 in. OC in the field of the board. End joints of adjacent gypsum board sheets shall be staggered not less than 4 ft OC. Outer layer attached to the cross tees through inner layer using 1-7/8 in. long Type S bugle-head steel screws spaced 8 in. OC at butted end joints and 12 in. OC in the field. Butted end joints to be centered along cross tees and be offset a min of 32 in. from end joints of inner layer. Rows of screws on both sides of butted end joints of each layer shall be located 3/8 to 1/2 in. from end joints. Butted side joints of outer layer to be offset a min of 18 in. from butted side joints of inner layer. **CGC INC** — Type C, IP-X2.

THE SIAM GYPSUM INDUSTRY (SONGKHLA) CO — Type C **UNITED STATES GYPSUM CO** — Type C, IP-X2.
USG BORAL DRYWALL SFZ LLC — Type C
USG MEXICO S A DE C V — Type C, IP-X2.

13. **Grille —** Steel grille, installed in accordance with the installation instructions provided with the ceiling damper.
14. **Discrete Products Installed in Air-handling Spaces* —** Automatic Balancing Valve/Damper — (Not Shown - Optional) — For use with item 8, Ruskin Company's Model CFD7 damper (CABS). Ceiling damper to be provided with plenum box per damper manufacturer's instructions with side outlet only. Entire assembly to be installed into any UL Class 0 or Class 1 flexible air duct in accordance with the instructions provided by the automatic balancing valve/damper manufacturer.
METAL INDUSTRIES INC — Model ABV-4, ABV-5, ABV-6
*** Indicates such products shall bear the UL or cUL Certification Mark for jurisdictions employing the UL or cUL Certification (such as Canada), respectively.**

FIRE RATED CEILING ASSEMBLY — 3" = 1'-0" — 15

System No. HW-D-0194

Assembly Ratings - 1 and 2 Hr (See Items 2 and 3B)
Joint Width- 1 in. Max
L Rating At Ambient - Less Than 1 CFM/Lin Ft (See Item 3B)
L Rating At 400°F - Less Than 1 CFM/Lin Ft (See Item 3B)
Class II Movement Capabilities-25 Percent Compression or Extension

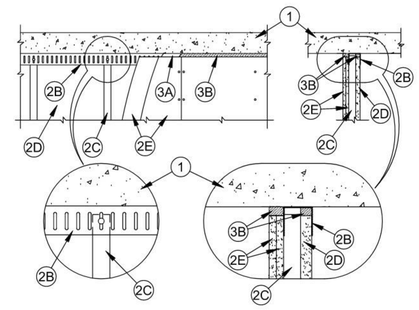

1. **Floor Assembly -** Min 4-1/2 in. (114 mm) thick reinforced lightweight or normal weight (100-150 pcf or 1600-2400 kg/m3) structural concrete.
2. **Shaft Wall Assembly -** With the exception of the ceiling runner, the 1 or 2 hr fire rated shaft wall assembly shall be constructed of the materials and in the manner described in the individual U400 or V400-Series Wall and Partition Design in the UL Fire Resistance Directory. The wall shall include the following construction features:
   A. **Floor and Wall Runners -** (Not Shown) - "J"-shaped runner, min 2-1/2 in. (64 mm) wide with unequal legs of 1 in. (25 mm) and 2 in. (51 mm), fabricated from min 24 MSG galv steel. Runners positioned with short leg toward finished side of wall. Runners attached to walls and floor with steel fasteners spaced max 24 in. (610 mm) OC. As an alternate to the "J"-shaped runner, a min 2-1/2 in. (64 mm) wide by 1 or 1-1/4 in. (25 or 32 mm) deep channel formed from min 24 MSG galv steel may be used for the floor runner.
   B. **Light Gauge Framing* - Slotted Ceiling Track -** Slotted ceiling track shall consist of galv steel channels with slotted flanges. Slotted ceiling track sized to accommodate steel "C-H" studs (Items 2C). Attached to concrete at ceiling with steel fasteners spaced max 12 in. OC (305 mm).
   BRADY CONSTRUCTION INNOVATIONS INC, DBA SLIPTRACK SYSTEMS - SLP-TRK
   CEMCO, LLC - CST
   CLARKDIETRICH BUILDING SYSTEMS - Type SLT, SLT-H
   MARINO/WARE, DIV OF WARE INDUSTRIES INC - Type SLT
   RAM SALES L L C - RAM Slotted Track
   SCAFCO STEEL STUD MANUFACTURING CO
   STEELER INC - Steeler Slotted Ceiling Runner
   TELLING INDUSTRIES L L C - True-Action Deflection Track
   C. **Steel Studs -** "C-H"-shaped steel studs to be min 2-1/2 in. (64 mm) wide and formed of min 24 MSG galv steel. Studs cut 1/2 to 3/4 in. (13 to 19 mm) less in length than assembly height with bottom nesting in and resting on floor runner and with top nesting in slotted ceiling track. Studs spaced 24 in. (610 mm) OC. After installation of gypsum board liner panels (Item 2D), studs secured to flange of floor runner on finished side of wall only with No. 6 by 1/2 in. (13 mm) long self-drilling, self-tapping steel screws. Studs secured to flange of slotted ceiling track on finished side of wall only with No. 8 by 1/2 in. (13 mm) long self-drilling, self-tapping wafer head steel screws at slot midheight.
   D. **Gypsum Board* -** 1 in. (25 mm) thick by 24 in. (610 mm) wide gypsum board liner panels as specified in the individual U400 or V400-Series Wall and Partition Design. Panels cut 1 in. (25 mm) less in length than floor to ceiling height. Vertical edges inserted in "H"-shaped section of "C-H" studs. Free edge of end panels attached to long leg of "J" runner (Item 2A) with 1-5/8 in. (41 mm) long Type S steel screws spaced max 12 in. (305 mm) OC.
   E. **Gypsum Board* -** Gypsum board sheets, 1/2 or 5/8 in. (13 or 16 mm) thick, applied vertically or horizontally in one or two layers on finished side of wall as specified in the individual U400 or V400-Series Wall and Partition Design. A max 1 in. (25 mm) gap shall be maintained between the top of the gypsum board and the bottom surface of the concrete floor. The screws attaching the gypsum board layers to the C-H studs shall be located 1 in. (25 mm) below the bottom of the slotted ceiling track (Item 2C). No gypsum board attachment screws are to penetrate the slotted ceiling track.
   The hourly fire rating of the joint system is equal to the hourly fire rating of the wall.
3. **Joint System -** Max separation between bottom of floor and top of liner panel (Item 2D) and between bottom of floor and top of gypsum board sheets (Item 2E) at time of installation of joint system is 1 in. (25 mm). The joint system is designed to accommodate a maximum 25 percent compression or extension from its installed width. The joint system consists of bond breaker tape and sealant, as follows:
   A. **Bond Breaker Tape -** Polyethylene tape supplied in rolls. Tape applied to flanges of slotted ceiling track (Item 2D) to prevent bonding of the sealant at points other than the top and bottom of the linear gap. Bond breaker tape is optional when movement capability of the joint is limited to compression only.
   B. **Fill, Void or Cavity Material* - Sealant -** Min 1 in. (25 mm) depth of sealant to be installed to fill linear gap between top of gypsum board liner panel (Item 2D) and top inside surface of slotted ceiling track (Item 2B) prior to installation of gypsum board sheets on finished side of wall. For 1 hr fire rated walls, min 5/8 in. (16 mm) depth of sealant to be installed to fill linear gap between top of gypsum board sheet (Item 2E) and bottom of concrete floor. For 2 hr walls, min 1 in. (25 mm) depth of sealant to be installed to fill linear gap between top of gypsum board sheets (Item 2E) and bottom of concrete floor.
   SPECIFIED TECHNOLOGIES INC - SpecSeal ES Elastomeric Sealant or SpecSeal LCI Sealant. **L Ratings apply when SpecSeal ES Elastomeric Sealant is used. When SpecSeal LCI Sealant is used, the movement capability of the joint is limited to 25 percent in compression only**.

* **Indicates such products shall bear the UL or cUL Certification Mark for jurisdictions employing the UL or cUL Certification (such as Canada), respectively.**

SHAFT WALL ASSEMBLY HW-D-0194 — 12" = 1'-0" — 4

IDENTIFICATION STAMP
DIV. OF THE STATE ARCHITECT
APP: 02-122821 INC: 2
REVIEWED FOR
SS ☑ FLS ☑ ACS ☑
DATE: 11/20/2025

Teter, Inc. expressly reserves its common law copyright and other property rights in these plans. This document, the ideas and designs incorporated herein, as an instrument of professional service, is not to be used in whole or in part, for any other project without prior written authorization.

MARK	DATE	DESCRIPTION
A.	11/13/2025	DSA BACKCHECK

USE OF ARCHITECT'S CONSTRUCTION DOCUMENTS

TETER, INC.
ARCHITECTS ENGINEERS CONNECTED
FRESNO HEADQUARTERS
VISALIA | BAKERSFIELD | MODESTO | SAN LUIS OBISPO

VISALIA CAMPUS UNIVERSITY CENTER
COLLEGE OF THE SEQUOIAS - INCREMENT 2
915 S. MOONEY BLVD
VISALIA, CALI

\\tetr-file1\Users\tara.chong_TETR\Documents\12498-A-UC_tara.chong.rvt

ABBREVIATIONS

ACP SUSPENDED ACOUSTIC PANEL CEILING SYSTEM
- ACP-1 SUSPENDED ACOUSTIC PANEL CEILING
- ACP-2 2'x6' ARMSTRONG LYRA PB & 2'x2' ARMSTRONG LYRA PB (WHITE)
- ACP-3 2'x8' ARMSTRONG LYRA PB (ORANGE)
- ACP-4 2'x4' ARMSTRONG LYRA PB (LIGHT GREY)
- ACP-5 2'x4' ARMSTRONG LYRA PB TEGULAR (CUSTOM GREY)
- ACP-6 WASHABLE ACOUSTIC PANEL SYSTEM

AWP ACOUSTIC WALL PANELS (FABRIC)

CT CERAMIC TILE (WALLS)

DWC DRY ERASE WALL COVERING

EC EXPOSED CONCRETE

EPX EPOXY

EXP EXPOSED TO METAL DECK ABOVE

FF FACTORY FINISH

GB GYPSUM BOARD

GLZ GLAZING/STOREFRONT/CURTAIN WALL

IMP INSULATED METAL PANEL PER MFR.

MP METAL PANEL

P PAINT
- P-1 PAINT 1: WHITE
- P-2 PAINT 2: ORANGE
- P-3 PAINT 3: GREY

PLY PLYWOOD

RB RESILIENT TOPSET BASE

SSB STANLESS STEEL COVED BASE

USG USG CEILING PLUS PLANX UNIVERSAL

WC-1 VINYL WALL COVERING (BRUSHED ALUMINUM)

FINISH SCHEDULE (FOR FLOOR FINISHES, REFER TO FLOOR FINISH PLAN, A901 & A902)

ROOM NO.	ROOM NAME	FLOOR	WALLS								CEILING		REMARKS
			NORTH		EAST		SOUTH		WEST				
		BASE	MATERIAL	FINISH	MATERIAL	FINISH	MATERIAL	FINISH	MATERIAL	FINISH	MATERIAL	FINISH	
100	ENTRY STUDY LAB	RB	GLZ/MP/GB	P-1/FF	GB/MP	P-1/FF	GB/MP/GLZ	P-1/FF	GLZ/MP	FF	USG/MP	FF	
101	LECTURE	RB	GB/AWP	P-3/FF	GB/APP	P-3/FF	GB/AWP	P-3/FF	GLZ/AWP	FF	ACP-5	FF	
101A	VESTIBULE	RB	GB/GLZ	P-1/FF	GB	P-1	GB	P-1	GB/MP	P-1/FF	ACP-1	FF	
101B	VESTIBULE	RB	GB/GLZ	P-1/FF	GB	P-1	GB	P-1	GB/GLZ	P-1/FF	ACP-1	FF	
101C	STO.	RB	GB	P-1	GB	P-1	GB	P-1	GB	P-1	EXP	-	
101D	STO.	RB	GB	P-1	GB	P-1	GB	P-1	GB	P-1	EXP	-	
102	STO.	RB	GB	P-1	GB	P-1	GB	P-1	GB	P-1	GB	P-1	
102A	MECH.	RB	EC	-	GB	P-1	GB	P-1	GB	P-1	GB	P-1	
103	PROGRAM OFFICE	RB	GB/GLZ	P-1/FF	GB	P-1	GB/GLZ	P-1/FF	GB	P-1	ACP-1	FF	
103A	OFFICE	RB	GB/GLZ	P-1/FF	GB	P-1	GB/GLZ	P-1/FF	GB	P-1	ACP-1	FF	
103B	OFFICE	RB	GB/GLZ	P-1/FF	GB	P-1	GB/GLZ	P-1	GB	P-1	ACP-1	FF	
103C	OFFICE	RB	GB/GLZ	P-1/FF	GB	P-1	GB	P-1	GB	P-1	ACP-1	FF	
103D	MEETING	RB	GB/GLZ	P-1/FF	GB	P-1	GB/GLZ	P-1/FF	GB	P-1	ACP-1	FF	
104	PROGRAM OFFICE	RB	GB/GLZ	P-1/FF	GB	P-1	GB/GLZ	P-1/FF	GB	P-1	ACP-1	FF	
104A	OFFICE	RB	GB/GLZ	P-1/FF	GB	P-1	GB/GLZ	P-1/FF	GB	P-1	ACP-1	FF	
104B	OFFICE	RB	GB/GLZ	P-1/FF	GB	P-1	GB/GLZ	P-1/FF	GB	P-1	ACP-1	FF	
104C	OFFICE	RB	GB/GLZ	P-1/FF	GB	P-1	GB	P-1	GB	P-1	ACP-1	FF	
104D	MEETING	RB	GB/GLZ	P-1/FF	GB	P-1	GB/GLZ	P-1/FF	GB	P-1	ACP-1	FF	
105	COR.	RB	GB/GLZ	P-2/FF	GB	P-2	-	-	GB/WC-1	P-2/FF	ACP-3	FF	
106	E.M.R	RB	GB	P-1	GB	P-1	GB	P-1	GB	P-1	GB	P-1	
107	UNISEX	SSB	CT	FF	CT	FF	CT	FF	CT	FF	GB	P-1	
108	JAN.	RB	GB	P-1	GB	P-1	GB	P-1	GB	P-1	EXP	-	
109	WOMEN	SSB	CT	FF	CT	FF	CT	FF	CT	FF	GB	P-1	
110	MEN	SSB	CT	FF	CT	FF	CT	FF	CT	FF	GB	P-1	
111	CLASSROOM	RB	GB/GLZ	P-1/P-3/FF	GB/DWC	P-1/P-3/FF	GB/GLZ/DWC	P-1/P-3/FF	GB/DWC	P-1/P-3/FF	ACP-1	FF	
112	COMPUTER LAB	RB	GB/GLZ	P-1/P-3/FF	GB/DWC	P-1/P-3/FF	GB/GLZ/DWC	P-1/P-3/FF	GB/DWC	P-1/P-3/FF	ACP-1	FF	
113	MEET.	RB	GLZ	FF	GLZ	FF	GB	P-1	GLZ	FF	ACP-4	FF	
114	MEET.	RB	GB	FF	GLZ	FF	GLZ	FF	GLZ	FF	ACP-4	FF	
115	CLASSROOM	RB	GB/GLZ/DWC	P-1/P-3/FF	GB/DWC	P-1/P-3/FF	GB/GLZ	P-1/P-3/FF	GB/DWC	P-1/P-3/FF	ACP-1	FF	
116	CLASSROOM	RB	GB/GLZ/DWC	P-1/P-3/FF	GB/DWC	P-1/P-3/FF	GB/GLZ	P-1/P-3/FF	GB/DWC	P-1/P-3/FF	ACP-1	FF	
117	CLASSROOM	RB	GB/GLZ/DWC	P-1/P-3/FF	GB/DWC	P-1/P-3/FF	GB/GLZ	P-1/P-3/FF	GB/DWC	P-1/P-3/FF	ACP-1	FF	
118	PROGRAM OFFICE	RB	GB/GLZ	P-1/FF	GB	P-1	GB/GLZ	P-1/FF	GB	P-1	ACP-1	FF	
118A	OFFICE	RB	GB/GLZ	P-1/FF	GB	P-1	GB/GLZ	P-1/FF	GB	P-1	ACP-1	FF	
118B	OFFICE	RB	GB/GLZ	P-1/FF	GB	P-1	GB/GLZ	P-1/FF	GB	P-1	ACP-1	FF	
118C	OFFICE	RB	GB	P-1	GB	P-1	GB/GLZ	P-1/FF	GB	P-1	ACP-1	FF	
118D	MEETING	RB	GB/GLZ	P-1/FF	GB	P-1	GB/GLZ	P-1/FF	GB	P-1	ACP-1	FF	
119	DATA	RB	GB/PLY	P-1	GB/PLY	P-1	GB/PLY	P-1	GB/PLY	P-1	GB	P-1	
120	COS ADMIN	RB	GB/GLZ	P-1/FF	GB/GLZ	P-1/FF	GB	P-1	GB/GLZ	FF	ACP-1	FF	
120A	OFFICE	RB	GB	P-1	GB/GLZ	P-1/FF	GB	P-1	GB	P-1	ACP-1	FF	
121	UNISEX	SSB	CT	FF	CT	FF	CT	FF	CT	FF	GB	P-1	
122	WOMEN	SSB	CT	FF	CT	FF	CT	FF	CT	FF	GB	P-1	
123	MEN	SSB	CT	FF	CT	FF	CT	FF	CT	FF	GB	P-1	
124	E.M.R	RB	GB	P-1	GB	P-1	GB	P-1	GB	P-1	GB	P-1	
125	COR.	RB	-	-	MP/GB	FF/P-2	GB	P-2	GB/WC	P-2/FF	ACP-3	FF	
126	STO.	RB	GB	P-1	GB	P-1	GB	P-1	GB	P-1	EXP	-	
127	COR.	RB	GB	P-1	-	-	GB/MP	P-1/P-2/FF	GB	P-1	ACP-2/ACP-4	FF	
128	OPEN STUDY LAB	RB	GB/WC/WC-1	P-1/P-2/FF	-	-	GB/DWC	P-1/FF	-	-	ACP-4	FF	
129	OPEN STUDY LAB	RB	GB/MP/DWC	P-1/FF	GLZ/MP/DWC	FF	GB/MP/DWC	P-1/P-2/FF	-	-	ACP-2/ACP-4	FF	
130	STO.	RB	GB	P-1	GB	P-1	GB	P-1	GB	P-1	EXP	-	
130A	MECH.	RB	GB	P-1	GB	P-1	GB	P-1	GB	P-1	EXP	-	
131	ELEC	RB	GB	P-1	GB	P-1	GB	P-1	GB	P-1	EXP	-	
200	COR.	RB	GB	P-1	-	-	GB/MP	P-1/P-2/FF	MP	FF	ACP-2/ACP-4	FF	
201	FACULTY LOUNGE	RB	GB/GLZ	P-1/FF	GB	P-1	GB/GLZ	P-1/FF	GB	P-1	ACP-1	FF	
201A	UNISEX	SSB	CT	FF	CT	FF	CT	FF	CT	FF	GB	P-1	
201B	MEETING	RB	GB/GLZ	P-1/FF	GB	P-1	GB/GLZ	P-1/FF	GB	P-1	ACP-1	FF	
202	CLASSROOM	RB	GB/GLZ	P-1/P-3/FF	GB/DWC	P-1/P-3/FF	GB/GLZ/DWC	P-1/P-3/FF	GB/DWC	P-1/P-3/FF	ACP-1	FF	
203	COR.	RB	GB/GLZ	P-2/FF	GB	P-2	-	-	GB/WC	P-2/FF	ACP-3	FF	
204	UNISEX	SSB	CT	FF	CT	FF	CT	FF	CT	FF	GB	P-1	
205	UNISEX	SSB	CT	FF	CT	FF	CT	FF	CT	FF	GB	P-1	
206	JAN.	RB	GB	P-1	GB	P-1	GB	P-1	GB	P-1	EXP	-	
207	WOMEN	SSB	CT	FF	CT	FF	CT	FF	CT	FF	GB	P-1	
208	MEN	SSB	CT	FF	CT	FF	CT	FF	CT	FF	GB	P-1	
211	CLASSROOM	RB	GB/GLZ	P-1/P-3/FF	GB/DWC	P-1/P-3/FF	GB/GLZ/DWC	P-1/P-3/FF	GB/DWC	P-1/P-3/FF	ACP-1	FF	
212	CLASSROOM	RB	GB/GLZ	P-1/P-3/FF	GB/DWC	P-1/P-3/FF	GB/GLZ/DWC	P-1/P-3/FF	GB/DWC	P-1/P-3/FF	ACP-1	FF	
215	COMPUTER LAB	RB	GB/GLZ/DWC	P-1/P-3/FF	GB/DWC	P-1/P-3/FF	GB/GLZ	P-1/P-3/FF	GB/DWC	P-1/P-3/FF	ACP-1	FF	
216	CLASSROOM	RB	GB/GLZ/DWC	P-1/P-3/FF	GB/DWC	P-1/P-3/FF	GB/GLZ	P-1/P-3/FF	GB/DWC	P-1/P-3/FF	ACP-1	FF	
217	CLASSROOM	RB	GB/GLZ/DWC	P-1/P-3/FF	GB/DWC	P-1/P-3/FF	GB/GLZ	P-1/P-3/FF	GB/DWC	P-1/P-3/FF	ACP-1	FF	
218	CLASSROOM	RB	GB/GLZ/DWC	P-1/P-3/FF	GB/DWC	P-1/P-3/FF	GB/GLZ	P-1/P-3/FF	GB/DWC	P-1/P-3/FF	ACP-1	FF	
219	VEST.	RB	GB	P-1	GB	P-1	GB	P-1	GB	P-1	EXP	-	
219A	ELEC	RB	GB	P-1	GB	P-1	GB	P-1	GB	P-1	EXP	-	
219B	DATA	RB	GB/PLY	P-1	GB/PLY	P-1	GB/PLY	P-1	GB/PLY	P-1	GB	P-1	
220	MEET.	RB	GB	P-1	GB/GLZ	P-1/FF	GB	P-1	GB/GLZ	P-1	ACP-1	FF	
221	MEET.	RB	GB/GLZ	P-1/FF	GB/GLZ	P-1/FF	GB	P-1	GB	P-1	ACP-1	FF	
222	MEET.	RB	GLZ	FF	GB	P-1	GB	P-1	GB/GLZ	P-1/FF	ACP-1	FF	
223	UNISEX	SSB	CT	FF	CT	FF	CT	FF	CT	FF	GB	P-1	
224	WOMEN	SSB	CT	FF	CT	FF	CT	FF	CT	FF	GB	P-1	
225	MEN	SSB	CT	FF	CT	FF	CT	FF	CT	FF	GB	P-1	
226	LAC	RB	GB	P-1	GB	P-1	GB	P-1	GB	P-1	ACP-1	FF	
227	STO.	RB	GB	P-1	GB	P-1	GB	P-1	GB	P-1	EXP	-	
213	OPEN STUDY LAB	RB	GB/WC-1	P-1/P-2/FF	-	-	GB/DWC	P-1/P-2/FF	-	-	ACP-2/ACP-4	FF	
214	OPEN STUDY LAB	RB	GB/MP/DWC	P-1/FF	GLZ/MP/DWC	FF	GB/DWC	P-1/FF	-	-	ACP-2/ACP-4	FF	
228	COR.	RB	-	-	GB/GLZ/MP	P-2/FF	GB	P-2	GB/WC-1	P-2/FF	ACP-3	FF	
229	CORRIDOR	RB	-	-	WC-1	FF	GB/DWC	P-1/P-2/FF	GB/GLZ	P-1/FF	USG/ACP-1/ACP-2/GB	FF/P-2	
230	BIOLOGY CLASSROOM	RB	GB/DWC	P-1/P-2/FF	GB	P-1	GB/GLZ	P-1/FF	GB/DWC	P-1/FF	ACP-6/GB	FF/P-2	
231	PREP LAB	RB	GB	P-1	GB	P-1	GB/GLZ	P-1/FF	GB/GLZ	P-1/FF	ACP-6	FF	
231A	REF.	-	IMP	FF	IMP	FF	IMP	FF	IMP	FF	IMP	FF	
231B	SUPPORT LAB	RB	GB/GLZ	P-1/FF	GB/GLZ	P-1/FF	GB	P-1	GB/GLZ	P-1	ACP-6	FF	
232	CHEMISTRY CLASSROOM	RB	GB/GLZ	P-1/P-2/FF	GB/GLZ/DWC	P-1/FF	GB	P-1	GB/GLZ	P-1/P-2/FF	ACP-6/GB	FF/P-2	

FINISH SCHEDULE 5

IDENTIFICATION STAMP
DIV. OF THE STATE ARCHITECT
APP: 02-122821 INC: 2
REVIEWED FOR
SS ☑ FLS ☑ ACS ☑
DATE: 11/20/2025

Teter, Inc. expressly reserves its common law copyright and other property rights in these plans. This document, the ideas and designs incorporated herein, as an instrument of professional service, is not to be used in whole or in part, for any other project without prior written authorization.

MARK	DATE	DESCRIPTION
A	11/13/2025	DSA BACKCHECK

LICENSED ARCHITECT JONATHAN COULTER C-33093 REN. 03-31-27 STATE OF CALIFORNIA

TETER, INC.
FRESNO HEADQUARTERS
VISALIA | BAKERSFIELD | MODESTO | SAN LUIS OBISPO
ARCHITECTS ENGINEERS CONNECTED

VISALIA CAMPUS UNIVERSITY CENTER
COLLEGE OF THE SEQUOIAS - INCREMENT 2
915 S. MOONEY BLVD
VISALIA, CALIFORNIA

DRAWING TITLE
FINISH SCHEDULE

PROJECT NO.
22-12498

DRAWING
A900.2

PLOT DATE: 11/10/2025 9:10:26 AM

\\tet-file1\Users\tara.chong_TETR\Documents\12498-A-UC_tara.chong.rvt



OVERALL FLOOR FINISH PLAN - FIRST FLOOR

3/32" = 1'-0" | 4

KEYNOTES (00.00)

LEGEND

- ACCESSIBLE METAL BAR GRATING
- CPT-1, CARPET COLOR 1 (LIGHT)
- CPT-2, CARPET COLOR 2 (DARK)
- INSULATED METAL PANEL PER MFR.
- LVT, LUXURY VINYL TILE
- SEALED CONCRETE
- CT-1, CERAMIC TILE
- WOOD, MAPLE
- EPOXY

IDENTIFICATION STAMP
DIV. OF THE STATE ARCHITECT
APP: 02-122821 INC: 2
REVIEWED FOR
SS ☑ FLS ☑ ACS ☑
DATE: 11/20/2025

Teter, Inc. expressly reserves its common law copyright and other property rights in these plans. This document, the ideas and designs incorporated herein, as an instrument of professional service, is not to be used in whole or part, for any other project, without prior written authorization.

MARK	DATE	DESCRIPTION
A	11/13/2025	DSA BACKCHECK

LICENSED ARCHITECT REGISTERED PROFESSIONAL ENGINEER STATE OF CALIFORNIA

TETER, INC.
FRESNO HEADQUARTERS
VISALIA | BAKERSFIELD | MODESTO | SAN LUIS OBISPO
ARCHITECTS ENGINEERS CONNECTED

VISALIA CAMPUS UNIVERSITY CENTER
COLLEGE OF THE SEQUOIAS - INCREMENT 2
915 S. MOONEY BLVD
VISALIA, CALIFORNIA

DRAWING TITLE
FLOOR FINISH PLAN - FIRST FLOOR

PROJECT NO.
22-12498

DRAWING
A901.2

PLOT DATE: 11/10/2025 9:10:50 AM

\\tet-file1\Users\tara.chong_TETR\Documents\12498-A-UC_tara.chong.rvt



NORTH

OVERALL FLOOR FINISH PLAN - SECOND FLOOR

3/32" = 1'-0" | 4

KEYNOTES

LEGEND

- ACCESSIBLE METAL BAR GRATING
- CPT-1, CARPET COLOR 1 (LIGHT)
- CPT-2, CARPET COLOR 2 (DARK)
- INSULATED METAL PANEL PER MFR.
- LVT, LUXURY VINYL TILE
- SEALED CONCRETE
- CT-1, CERAMIC TILE
- WOOD, MAPLE
- EPOXY

PLOT DATE: 11/10/2025 9:11:11 AM

IDENTIFICATION STAMP
DIV. OF THE STATE ARCHITECT
APP: 02-122821 INC: 2
REVIEWED FOR
SS ☑ FLS ☑ ACS ☑
DATE: 11/20/2025

Teter, Inc. expressly reserves its statutory law copyright and other property rights in these plans. This document, the ideas and designs incorporated herein, as an instrument of professional service, is not to be used in whole or part, for any other project without prior written authorization.

MARK	DATE	DESCRIPTION
A	11/13/2025	DSA BACKCHECK

LICENSED ARCHITECT ★ REGISTERED PROFESSIONAL ENGINEER ★ STATE OF CALIFORNIA

TETER, INC.
ARCHITECTS ENGINEERS CONNECTED
FRESNO HEADQUARTERS
VISALIA | BAKERSFIELD | MODESTO | SAN LUIS OBISPO

VISALIA CAMPUS UNIVERSITY CENTER
COLLEGE OF THE SEQUOIAS - INCREMENT 2
915 S. MOONEY BLVD
VISALIA, CALIFORNIA

DRAWING TITLE
FLOOR FINISH PLAN - SECOND FLOOR

PROJECT NO.
22-12498

DRAWING
A902.2

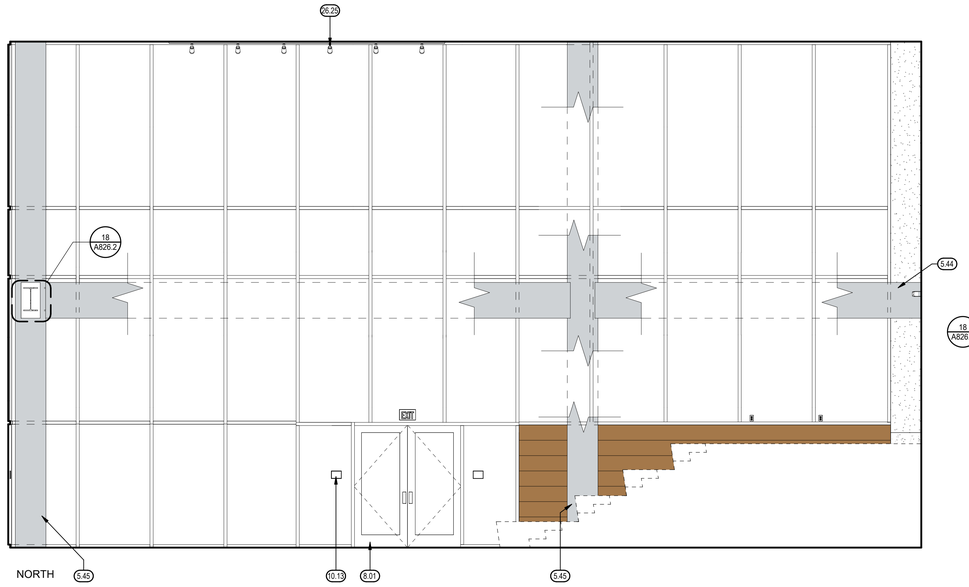

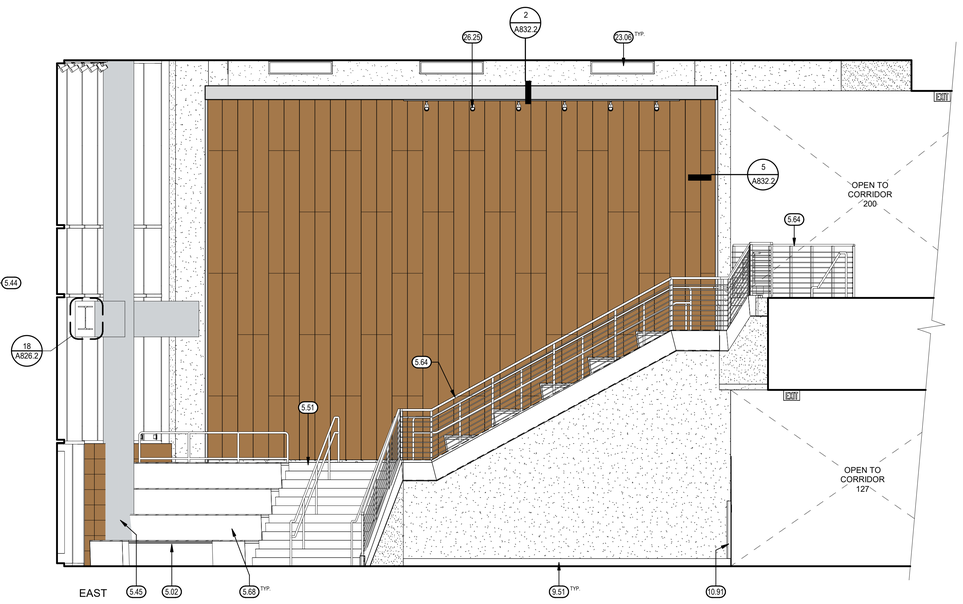

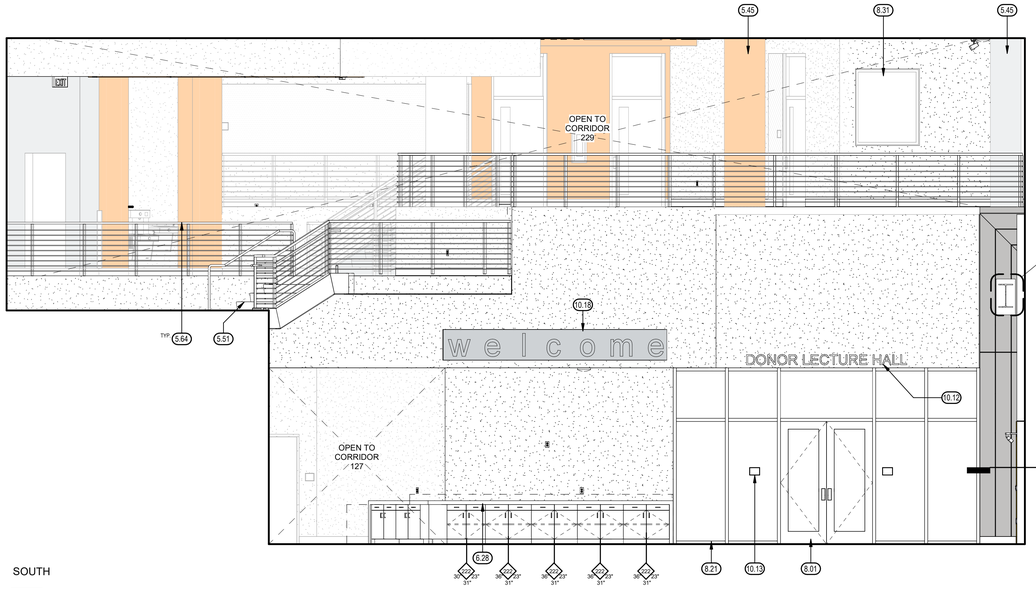

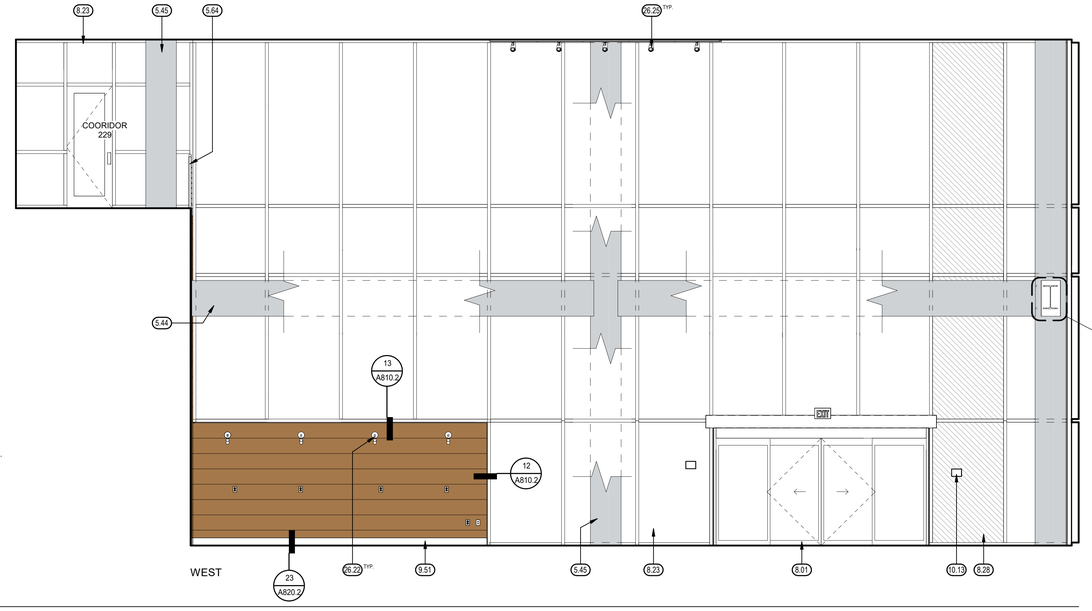

100 ENTRY STUDY LAB

INTERIOR ELEVATIONS

1/4" = 1'-0" | 4

KEYNOTES (00.00)

5.02	METAL FRAMED SEATING AND LANDING
5.44	BEAM ENCLOSURE, SEE **18 / A826.2**
5.45	COLUMN ENCLOSURE, SEE **7 / A826.2**
5.51	METAL PAN STAIRS WITH CONCRETE FILLED TREADS/LANDING
5.64	GUARDRAIL, TYP. SEE **24 / A850.2**
5.68	STAIR HANDRAIL, SEE **20 / A850.2**
6.28	SOLID SURFACE COUNTER TOP
8.01	DOOR AND FRAME AS SCHEDULED
8.21	ALUMINUM STOREFRONT, SEE WINDOW SCHEDULE
8.23	ALUMINUM CURTAIN WALL, SEE WINDOW SCHEDULE
8.28	ORANGE SILKSCREEN GLAZING
8.31	WINDOW AS SCHEDULED
9.51	TOPSET BASE AS SCHEDULED
10.12	8" HIGH DIMENSIONAL LETTER CHARACTER SIGNAGE
10.13	WALL SIGNAGE PER PLAN, TYP SEE **3 / A801.2**
10.18	LOBBY SIGNAGE, SEE **1 / A865.2**
10.91	CORNER GUARD, SEE **10 / A863.2**
23.06	WALL REGISTER, SEE MECHANICAL
26.22	WALL MOUNTED LIGHT FIXTURE, SEE ELECTRICAL
26.25	TRACK LIGHTING, SEE ELECTRICAL

LEGEND

- PAINT COLOR 1 OVER GYPSUM BOARD, SEE FINISH SCHEDULE
- PAINT COLOR 2 OVER GYPSUM BOARD, SEE FINISH SCHEDULE
- PAINT COLOR 3 OVER GYPSUM BOARD, SEE FINISH SCHEDULE
- METAL PANEL 1
  REPEAT SERIES OF 5 BOX RIB PANELS
  (BR2, BR2, BR4, BR2, BR3, SEE **1 / A820.2**), VERTICAL
  (SAME AS EXTERIOR ELEVATIONS
- METAL PANEL 2
  FLUSH METAL PANEL, HORIZONTAL, (BROWN)
  (SAME AS EXTERIOR ELEVATIONS)
- METAL PANEL 3
  FLUSH METAL PANEL, VERTICAL, (SILVER)
  (SAME AS EXTERIOR ELEVATIONS EXCEPT VERTICAL)
- FRP, WHITE. SEE **6 / A863.2**
- VINYL WALL COVERING, BRUSHED ALUMINUM SEE **2 / A863.2**
- ACOUSTIC WALL COVERING, GREY
- DRY ERASE WALL COVERING, SEE **5 / A863.2**
- FIRE RETARDANT TREATED PLYWOOD
- VINYL COVERED TACKBOARD, SEE **4 / A863.2**
- CERAMIC WALL TILE, SEE FINISH SCHEDULE

GENERAL NOTES

A. PROVIDE BLOCKING FOR ALL WALL MOUNTED ACCESSORIES AND EQUIPMENT, SEE **28 / A863.2**

B. FOR TYPICAL ACCESSIBLE TOILET ROOM FIXTURE AND ACCESSORY MOUNTING HEIGHTS AND CLEARANCES, SEE **2 / A800.2** & **3 / A800.2**

KEY PLAN

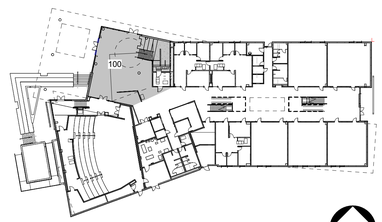

IDENTIFICATION STAMP
DIV. OF THE STATE ARCHITECT
APP: 02-122821 INC: 2
REVIEWED FOR
SS ☑ FLS ☑ ACS ☑
DATE: 11/20/2025

Teter, Inc. expressly reserves its common law copyright and other property rights in these plans. This document, the ideas and designs incorporated herein, as an instrument of professional service, is not to be used in whole or in part, for any other project without prior written authorization.

MARK	DATE	DESCRIPTION
A	11/13/2025	DSA BACKCHECK

LICENSED ARCHITECT ★ STATE OF CONNECTICUT ★ DOMINIC J. TETER ★ No. 22,032 ★ EXPIRATION DATE 12/31/2025

TETER, INC.
FRESNO HEADQUARTERS
VISALIA | BAKERSFIELD | MODESTO | SAN LUIS OBISPO
ARCHITECTS ENGINEERS CONNECTED

VISALIA CAMPUS UNIVERSITY CENTER
COLLEGE OF THE SEQUOIAS - INCREMENT 2
915 S. MOONEY BLVD
VISALIA, CALIFORNIA

DRAWING TITLE
INTERIOR ELEVATIONS - FIRST FLOOR

PROJECT NO.
22-12498

DRAWING
A910.2

PLOT DATE: 11/10/2025 9:11:42 AM
\\tet-file1\Users\tara.chong_TETR\Documents\12498-A-UC_tara.chong.rvt

\\tet-file1\Users\tara.chong_TETR\Documents\12498-A-UC_tara.chong.rvt

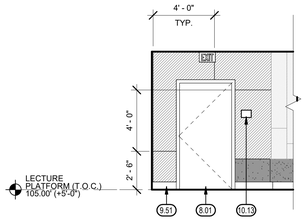

NORTH

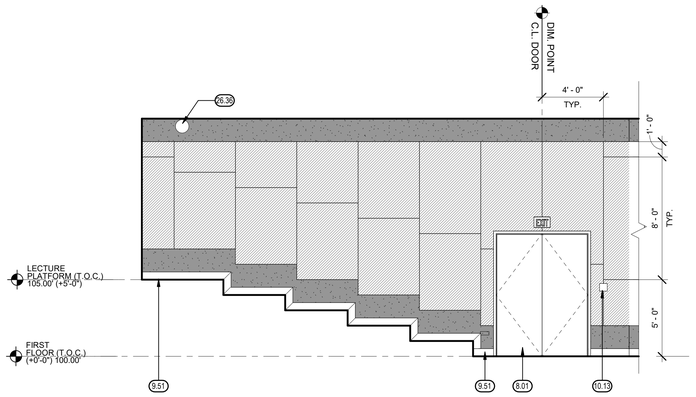

NORTH

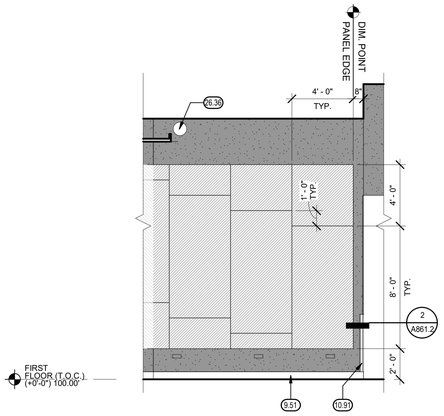

NORTH-EAST

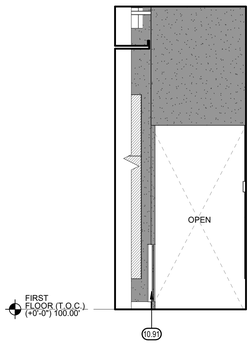

NORTH

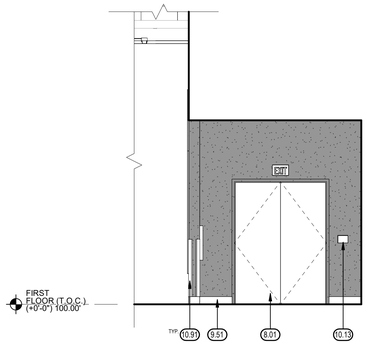

WEST - FACING DOOR 101A

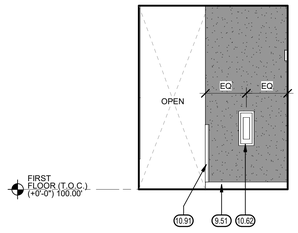

SOUTH - ADJACENT DOOR 101A

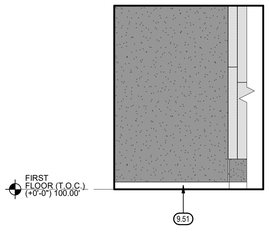

NORTH - ADJACENT DOOR 101A

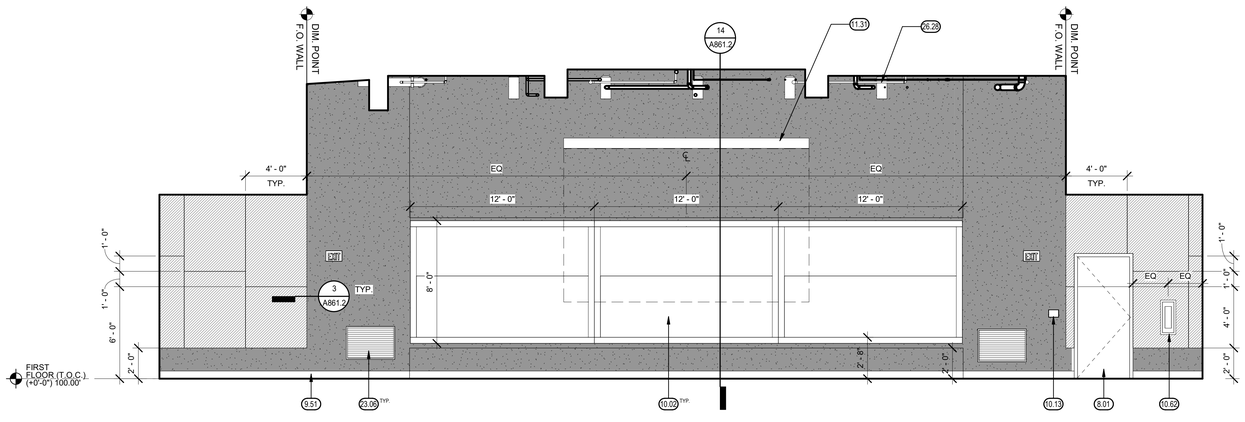

EAST

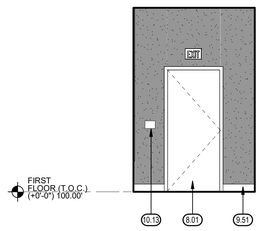

SOUTH - FACING DOOR 101F

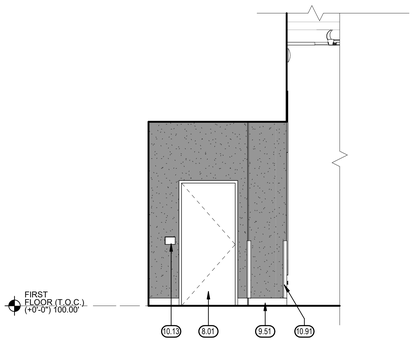

WEST - FACING DOOR 101E

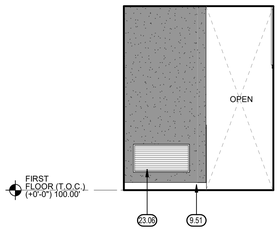

NORTH - ADJACENT DOOR 101E

101 LECTURE

INTERIOR ELEVATIONS

1/4" = 1'-0" | 4

KEYNOTES (X.XX)

8.01	DOOR AND FRAME AS SCHEDULED
9.51	TOPSET BASE AS SCHEDULED
10.02	VERTICAL SLIDING WHITEBOARD, SEE **14 / A861.2**
10.13	WALL SIGNAGE PER PLAN, TYP SEE **3 / A801.2**
10.62	FIRE EXTINGUISHER CABINET AND FIRE EXTINGUISHER
10.91	CORNER GUARD, SEE **10 / A863.2**
11.31	PROJECTION SCREEN, WALL MOUNTED
23.06	WALL REGISTER, SEE MECHANICAL
26.28	PENDANT LIGHT, SEE ELECTRICAL
26.36	WALL MOUNTED WAP, SEE ELECTRICAL

LEGEND

- PAINT COLOR 1 OVER GYPSUM BOARD, SEE FINISH SCHEDULE
- PAINT COLOR 2 OVER GYPSUM BOARD, SEE FINISH SCHEDULE
- PAINT COLOR 3 OVER GYPSUM BOARD, SEE FINISH SCHEDULE
- METAL PANEL 1 REPEAT SERIES OF 5 BOX RIB PANELS (BR2, BR2, BR4, BR2, BR3, SEE **1 / A820.2**), VERTICAL (SAME AS EXTERIOR ELEVATIONS
- METAL PANEL 2 FLUSH METAL PANEL, HORIZONTAL, (BROWN) (SAME AS EXTERIOR ELEVATIONS)
- METAL PANEL 3 FLUSH METAL PANEL, VERTICAL, (SILVER) (SAME AS EXTERIOR ELEVATIONS EXCEPT VERTICAL)
- FRP, WHITE, SEE **6 / A863.2**
- VINYL WALL COVERING, BRUSHED ALUMINUM SEE **2 / A863.2**
- ACOUSTIC WALL COVERING, GREY
- DRY ERASE WALL COVERING, SEE **5 / A863.2**
- FIRE RETARDANT TREATED PLYWOOD
- VINYL COVERED TACKBOARD, SEE **4 / A863.2**
- CERAMIC WALL TILE, SEE FINISH SCHEDULE

GENERAL NOTES

A. PROVIDE BLOCKING FOR ALL WALL MOUNTED ACCESSORIES AND EQUIPMENT, SEE **28 / A863.2**

B. FOR TYPICAL ACCESSIBLE TOILET ROOM FIXTURE AND ACCESSORY MOUNTING HEIGHTS AND CLEARANCES, SEE **2 / A800.2** & **3 / A800.2**

KEY PLAN

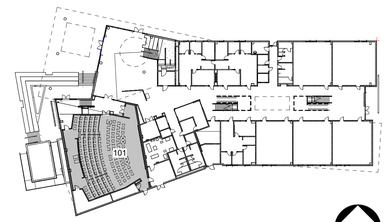

IDENTIFICATION STAMP
DIV. OF THE STATE ARCHITECT
APP: 02-122821 INC: 2
REVIEWED FOR
SS ☑ FLS ☑ ACS ☑
DATE: 11/20/2025

Teter, Inc. expressly reserves its common law copyright and other property rights in these plans. This document, the ideas and designs incorporated herein, as an instrument of professional service, is not to be used in whole or part, for any other project without prior written authorization.

MARK	DATE	DESCRIPTION
A.	11/13/2025	DSA BACKCHECK

TETER, INC.
FRESNO HEADQUARTERS
VISALIA | BAKERSFIELD | MODESTO | SAN LUIS OBISPO
ARCHITECTS ENGINEERS CONNECTED

VISALIA CAMPUS UNIVERSITY CENTER
COLLEGE OF THE SEQUOIAS - INCREMENT 2
915 S. MOONEY BLVD
VISALIA, CALIFORNIA

DRAWING TITLE
INTERIOR ELEVATIONS - FIRST FLOOR

PROJECT NO.
22-12498

DRAWING
A911.2

PLOT DATE: 11/10/2025 9:12:15 AM

\\tet-file1\Users\tara.chong_TETR\Documents\12498-A-UC_tara.chong.rvt

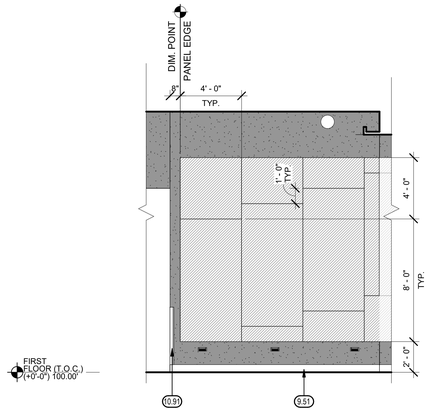

SOUTH-EAST

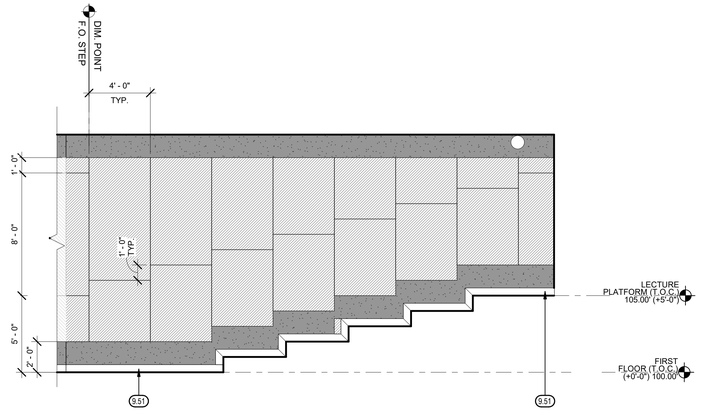

SOUTH

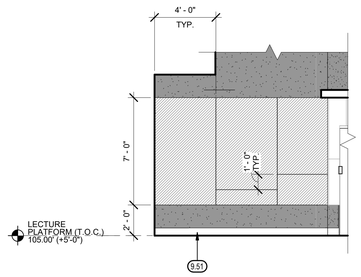

WEST (BOTH SIDES)

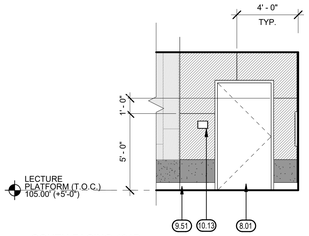

SOUTH FACING 101D
NORTH FACING 101C

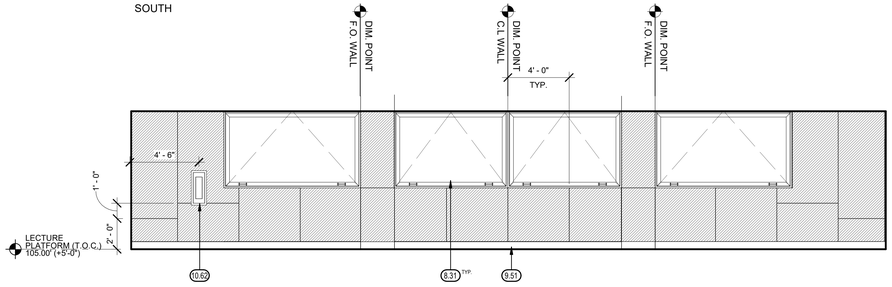

WEST

NOTE: OPERATION OF WINDOW IS FOR CLEANING PURPOSES ONLY AND NOT FOR USE BY ROOM OCCUPANTS. PROVIDE LOCK FOR MAINTENANCE ACCESS. ACCESSIBILITY REQUIREMENTS ARE NOT APPLICABLE PER CBC 11B-203.5.

101 LECTURE

INTERIOR ELEVATIONS

1/4" = 1'-0" | 4

KEYNOTES (X.XX)

8.01	DOOR AND FRAME AS SCHEDULED
8.31	WINDOW AS SCHEDULED
9.51	TOPSET BASE AS SCHEDULED
10.13	WALL SIGNAGE PER PLAN, TYP SEE **3 / A801.2**
10.62	FIRE EXTINGUISHER CABINET AND FIRE EXTINGUISHER
10.91	CORNER GUARD, SEE **10 / A863.2**

LEGEND

- PAINT COLOR 1 OVER GYPSUM BOARD, SEE FINISH SCHEDULE
- PAINT COLOR 2 OVER GYPSUM BOARD, SEE FINISH SCHEDULE
- PAINT COLOR 3 OVER GYPSUM BOARD, SEE FINISH SCHEDULE
- METAL PANEL 1 REPEAT SERIES OF 5 BOX RIB PANELS (BR2, BR2, BR4, BR2, BR3, SEE **1 / A820.2**), VERTICAL (SAME AS EXTERIOR ELEVATIONS
- METAL PANEL 2 FLUSH METAL PANEL, HORIZONTAL, (BROWN) (SAME AS EXTERIOR ELEVATIONS)
- METAL PANEL 3 FLUSH METAL PANEL, VERTICAL, (SILVER) (SAME AS EXTERIOR ELEVATIONS EXCEPT VERTICAL)
- FRP, WHITE, SEE **6 / A863.2**
- VINYL WALL COVERING, BRUSHED ALUMINUM SEE **2 / A863.2**
- ACOUSTIC WALL COVERING, GREY
- DRY ERASE WALL COVERING, SEE **5 / A863.2**
- FIRE RETARDANT TREATED PLYWOOD
- VINYL COVERED TACKBOARD, SEE **4 / A863.2**
- CERAMIC WALL TILE, SEE FINISH SCHEDULE

GENERAL NOTES

A. PROVIDE BLOCKING FOR ALL WALL MOUNTED ACCESSORIES AND EQUIPMENT, SEE **28 / A863.2**

B. FOR TYPICAL ACCESSIBLE TOILET ROOM FIXTURE AND ACCESSORY MOUNTING HEIGHTS AND CLEARANCES, SEE **2 / A800.2** & **3 / A800.2**

KEY PLAN

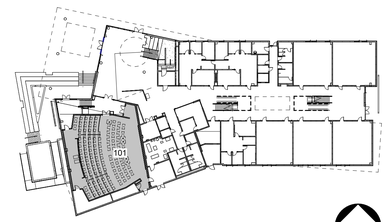

PLOT DATE: 11/10/2025 9:12:37 AM

IDENTIFICATION STAMP
DIV. OF THE STATE ARCHITECT
APP: 02-122821 INC: 2
REVIEWED FOR
SS ☑ FLS ☑ ACS ☑
DATE: 11/20/2025

Teter, Inc. expressly reserves its common law copyright and other property rights in these plans. This document, the ideas and designs incorporated herein, as an instrument of professional service, is not to be used in whole or part, for any other project without prior written authorization.

MARK	DATE	DESCRIPTION
A.	11/13/2025	DSA BACKCHECK

LICENSED ARCHITECT STATE OF CALIFORNIA

TETER, INC.
FRESNO HEADQUARTERS
VISALIA | BAKERSFIELD | MODESTO | SAN LUIS OBISPO
ARCHITECTS ENGINEERS CONNECTED

VISALIA CAMPUS UNIVERSITY CENTER
COLLEGE OF THE SEQUOIAS - INCREMENT 2
915 S. MOONEY BLVD
VISALIA, CALIFORNIA

DRAWING TITLE
INTERIOR ELEVATIONS - FIRST FLOOR

PROJECT NO.
22-12498

DRAWING
A912.2

\\tet-file1\Users\tara.chong_TETR\Documents\12498-A-UC_tara.chong.rvt

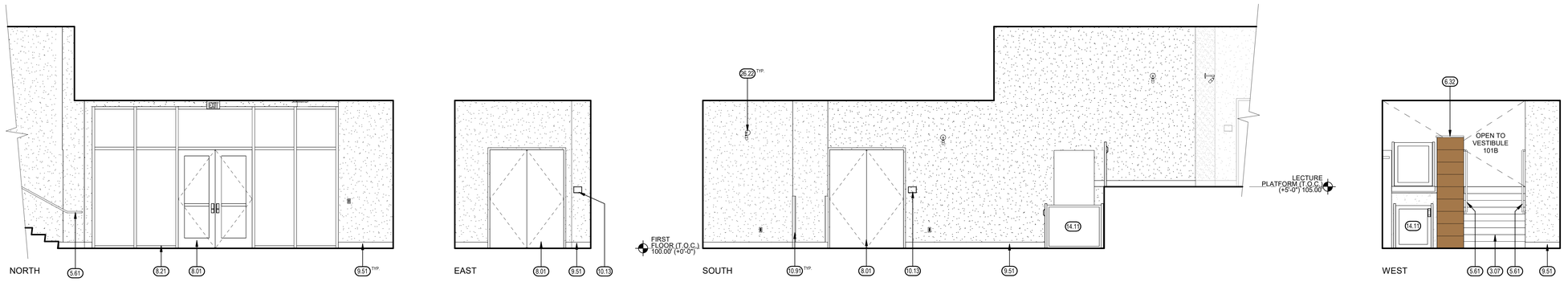

101A ENTRY VESTIBULE

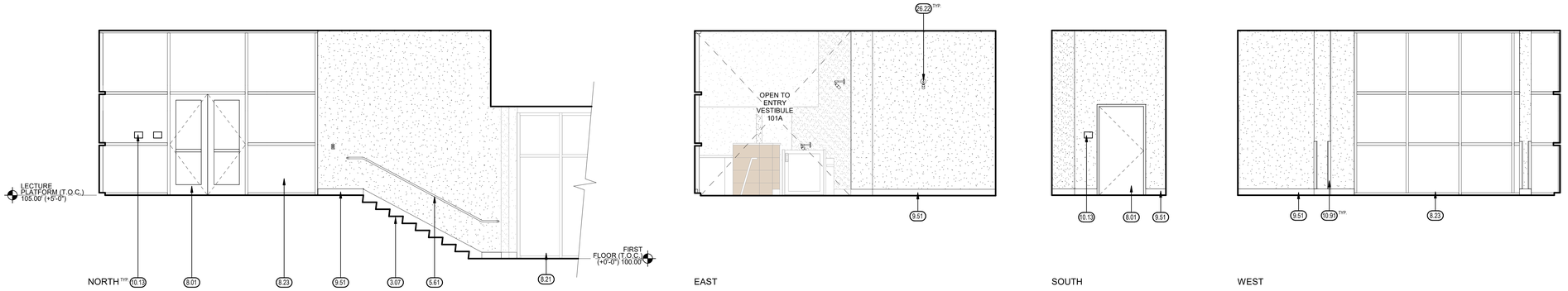

101B VESTIBULE

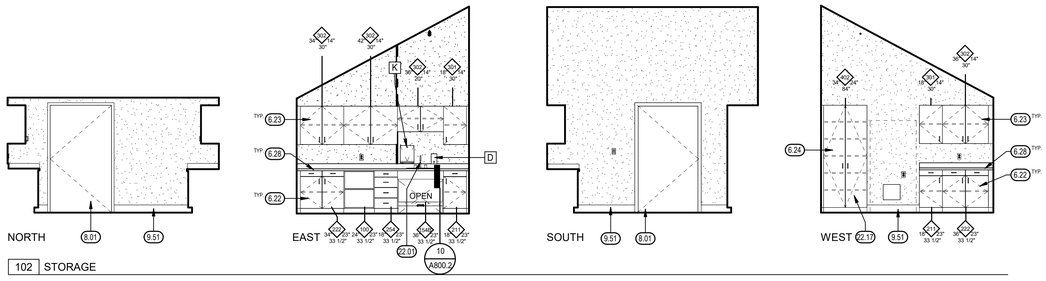

102 STORAGE

INTERIOR ELEVATIONS

1/4" = 1'-0" | 4

KEYNOTES (XX.XX)

3.07	CONCRETE STAIRS, SEE **10 / A852.2**
5.61	HANDRAIL, TYP. SEE **9 / A852.2**
6.22	PLASTIC LAMINATE BASE CABINET, SEE INTERIOR ELEVATIONS
6.23	PLASTIC LAMINATE UPPER CABINET, SEE INTERIOR ELEVATIONS
6.24	PLASTIC LAMINATE TALL STORAGE CABINET, SEE INTERIOR ELEVATIONS
6.28	SOLID SURFACE COUNTER TOP
6.32	SOLID SURFACE SILL, SEE **14 / A864.2**
8.01	DOOR AND FRAME AS SCHEDULED
8.21	ALUMINUM STOREFRONT, SEE WINDOW SCHEDULE
8.23	ALUMINUM CURTAIN WALL, SEE WINDOW SCHEDULE
9.51	TOPSET BASE AS SCHEDULED
10.13	WALL SIGNAGE PER PLAN, TYP SEE **3 / A801.2**
10.91	CORNER GUARD, SEE **10 / A863.2**
14.11	WHEELCHAIR LIFT, SEE **2 / A853.2**
22.01	ACCESSIBLE PLUMBING FIXTURE, SEE PLUMBING
22.17	PLUMBING EQUIPMENT, SEE PLUMBING
26.22	WALL MOUNTED LIGHT FIXTURE, SEE ELECTRICAL

TOILET ACCESSORY SCHEDULE

MARK	DESCRIPTION	MFR.	MODEL NO.	REMARKS
A	MIRROR (24" X 36")	BOBRICK	B-165	SURFACE MTD.
B	MIRROR (3'-0" X 5'-0")	BOBRICK	B-165	SURFACE MTD.
C	MIRROR (18" X 30")	BOBRICK	B-165	SURFACE MTD.
D	SOAP DISPENSER	BOBRICK	O.F.C.I.	SURFACE MTD.
E	TOILET TISSUE DISPENSER	BOBRICK	B-2888	SURFACE / PARTITION MTD.
F	TOILET SEAT COVER DISPENSER	BOBRICK	B-4221	SURFACE MTD.
G	GRAB BAR, REAR, SEE **19 / A800.2**	BOBRICK	B-6806 SERIES	42" LONG
H	GRAB BAR, SIDE, SEE **19 / A800.2**	BOBRICK	B-6806 SERIES	48" LONG
J	SANITARY NAPKIN DISPOSAL UNIT	BOBRICK	B-270	SURFACE MTD.
K	PAPER TOWEL DISPENSER	BOBRICK	B-262	SURFACE MTD.
L	DIAPER CHANGING STATION, SEE **17 / A800.2**	KOALA KARE	KB-300	SURFACE MTD.
M	COAT HOOK STRIP	BOBRICK	B-985	SURFACE MTD.

LEGEND

- PAINT COLOR 1 OVER GYPSUM BOARD, SEE FINISH SCHEDULE
- PAINT COLOR 2 OVER GYPSUM BOARD, SEE FINISH SCHEDULE
- PAINT COLOR 3 OVER GYPSUM BOARD, SEE FINISH SCHEDULE
- METAL PANEL 1 REPEAT SERIES OF 5 BOX RIB PANELS (BR2, BR2, BR4, BR2, BR3, SEE **1 / A820.2**), VERTICAL (SAME AS EXTERIOR ELEVATIONS
- METAL PANEL 2 FLUSH METAL PANEL, HORIZONTAL, (BROWN) (SAME AS EXTERIOR ELEVATIONS)
- METAL PANEL 3 FLUSH METAL PANEL, VERTICAL, (SILVER) (SAME AS EXTERIOR ELEVATIONS EXCEPT VERTICAL)
- FRP, WHITE. SEE **6 / A863.2**
- VINYL WALL COVERING, BRUSHED ALUMINUM SEE **2 / A863.2**
- ACOUSTIC WALL COVERING, GREY
- DRY ERASE WALL COVERING, SEE **5 / A863.2**
- FIRE RETARDANT TREATED PLYWOOD
- VINYL COVERED TACKBOARD, SEE **4 / A863.2**
- CERAMIC WALL TILE, SEE FINISH SCHEDULE

GENERAL NOTES

A. PROVIDE BLOCKING FOR ALL WALL MOUNTED ACCESSORIES AND EQUIPMENT, SEE **28 / A863.2**

B. FOR TYPICAL ACCESSIBLE TOILET ROOM FIXTURE AND ACCESSORY MOUNTING HEIGHTS AND CLEARANCES, SEE **2 / A800.2** & **3 / A800.2**

KEY PLAN

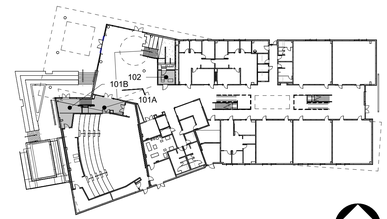

IDENTIFICATION STAMP
DIV. OF THE STATE ARCHITECT
APP: 02-122821 INC: 2
REVIEWED FOR
SS ☑ FLS ☑ ACS ☑
DATE: 11/20/2025

Teter, Inc. expressly reserves its common law copyright and other property rights in these plans. This document, the ideas and designs incorporated herein, as an instrument of professional service, is not to be used in whole or part, for any other project without prior written authorization.

MARK	DATE	DESCRIPTION
A.	11/13/2025	DSA BACKCHECK

LICENSED ARCHITECT STATE OF CALIFORNIA

TETER, INC.
FRESNO HEADQUARTERS
VISALIA | BAKERSFIELD | MODESTO | SAN LUIS OBISPO
ARCHITECTS ENGINEERS CONNECTED

VISALIA CAMPUS UNIVERSITY CENTER
COLLEGE OF THE SEQUOIAS - INCREMENT 2
915 S. MOONEY BLVD
VISALIA, CALIFORNIA

DRAWING TITLE
INTERIOR ELEVATIONS - FIRST FLOOR

PROJECT NO.
22-12498

DRAWING
A913.2

PLOT DATE: 11/10/2025 9:13:13 AM

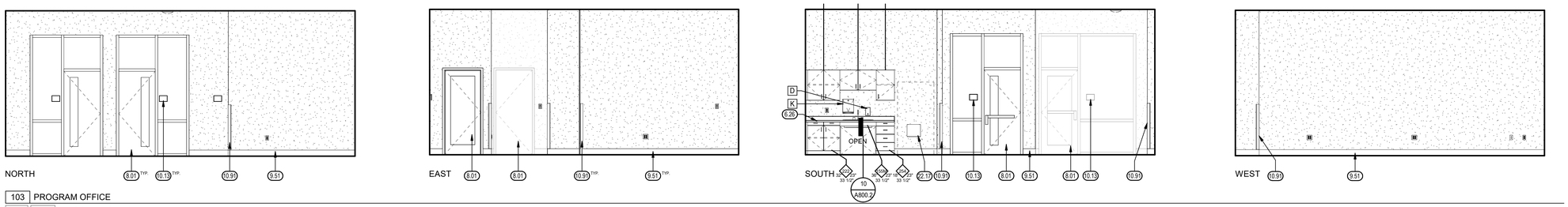

103 PROGRAM OFFICE
104 118 PROGRAM OFFICE

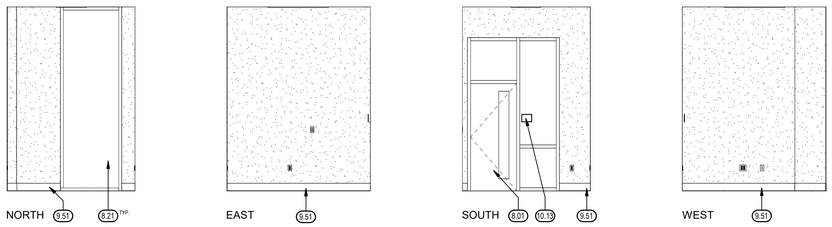

103A OFFICE
104A 118A OFFICE

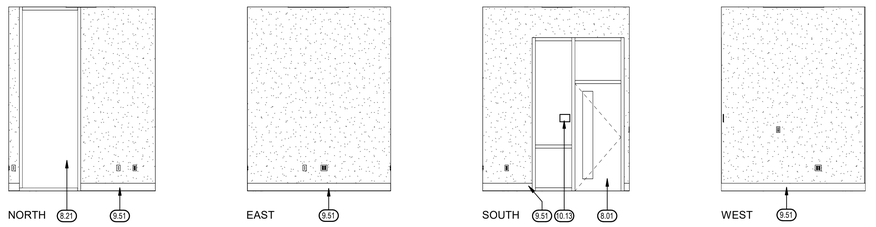

103B OFFICE
104B 118B OFFICE

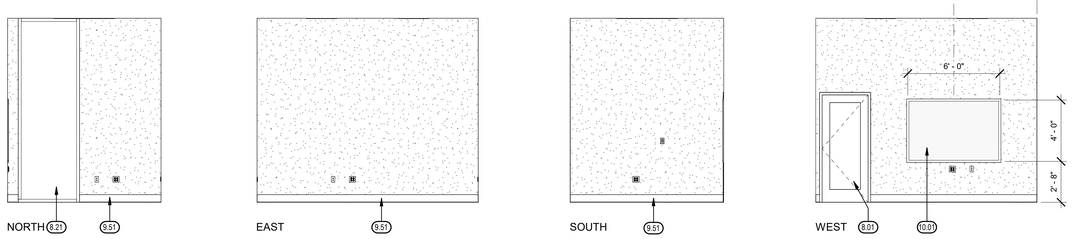

103C OFFICE
104C 118C OFFICE

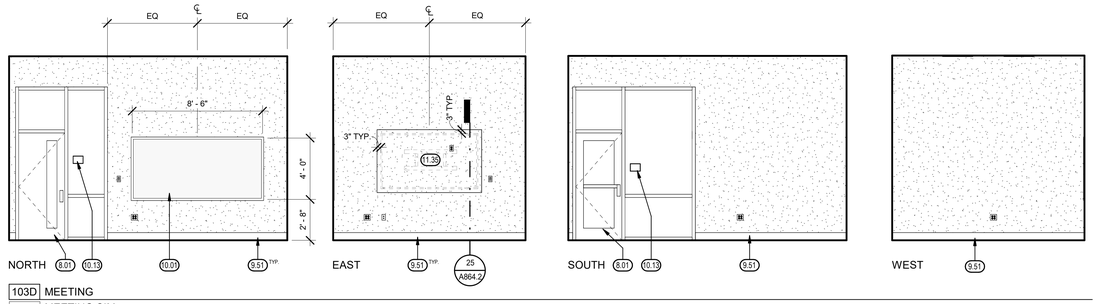

103D MEETING
104D MEETING SIM.

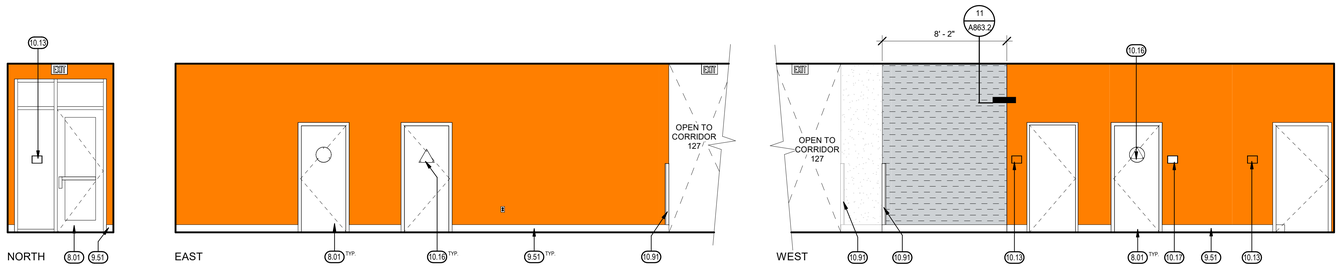

105 CORRIDOR

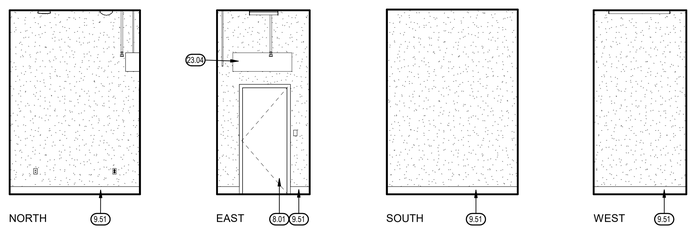

106 ELEVATOR MACHINE ROOM (E.M.R.)

INTERIOR ELEVATIONS

1/4" = 1'-0" | 4

KEYNOTES (30.00)

6.26	PLASTIC LAMINATE COUNTER TOP, SEE INTERIOR ELEVATIONS
8.01	DOOR AND FRAME AS SCHEDULED
8.21	ALUMINUM STOREFRONT, SEE WINDOW SCHEDULE
9.51	TOPSET BASE AS SCHEDULED
10.01	MARKER BOARD, SEE **20 / A863.2**
10.13	WALL SIGNAGE PER PLAN, TYP SEE **3 / A801.2**
10.16	TOILET ROOM DOOR GEOMETRIC SYMBOL, SEE **5 / A801.2**
10.17	DIAPER CHANGING STATION SIGNAGE, SEE **17 / A800.2**
10.91	CORNER GUARD, SEE **10 / A863.2**
11.35	MONITOR BRACKET OFCI, WALL MOUNTED, SEE **10 / A864.2**
22.17	PLUMBING EQUIPMENT, SEE PLUMBING
23.04	MECHANICAL EQUIPMENT, SEE MECHANICAL, TYP.

TOILET ACCESSORY SCHEDULE

MARK	DESCRIPTION	MFR.	MODEL NO.	REMARKS
A	MIRROR (24" X 36")	BOBRICK	B-165	SURFACE MTD.
B	MIRROR (3'-0" X 5'-0")	BOBRICK	B-165	SURFACE MTD.
C	MIRROR (18" X 30")	BOBRICK	B-165	SURFACE MTD.
D	SOAP DISPENSER	BOBRICK	O.F.C.I.	SURFACE MTD.
E	TOILET TISSUE DISPENSER	BOBRICK	B-2888	SURFACE / PARTITION MTD.
F	TOILET SEAT COVER DISPENSER	BOBRICK	B-4221	SURFACE MTD.
G	GRAB BAR, REAR, SEE **19 / A800.2**	BOBRICK	B-6806 SERIES	42" LONG
H	GRAB BAR, SIDE, SEE **19 / A800.2**	BOBRICK	B-6806 SERIES	48" LONG
J	SANITARY NAPKIN DISPOSAL UNIT	BOBRICK	B-270	SURFACE MTD.
K	PAPER TOWEL DISPENSER	BOBRICK	B-262	SURFACE MTD.
L	DIAPER CHANGING STATION, SEE **17 / A800.2**	KOALA KARE	KB-300	SURFACE MTD.
M	COAT HOOK STRIP	BOBRICK	B-985	SURFACE MTD.

LEGEND

- PAINT COLOR 1 OVER GYPSUM BOARD, SEE FINISH SCHEDULE
- PAINT COLOR 2 OVER GYPSUM BOARD, SEE FINISH SCHEDULE
- PAINT COLOR 3 OVER GYPSUM BOARD, SEE FINISH SCHEDULE
- METAL PANEL 1 REPEAT SERIES OF 5 BOX RIB PANELS (BR2, BR2, BR4, BR2, BR3. SEE **1 / A820.2**), VERTICAL (SAME AS EXTERIOR ELEVATIONS
- METAL PANEL 2 FLUSH METAL PANEL, HORIZONTAL, (BROWN) (SAME AS EXTERIOR ELEVATIONS)
- METAL PANEL 3 FLUSH METAL PANEL, VERTICAL, (SILVER) (SAME AS EXTERIOR ELEVATIONS EXCEPT VERTICAL)
- FRP, WHITE. SEE **6 / A863.2**
- VINYL WALL COVERING, BRUSHED ALUMINUM SEE **2 / A863.2**
- ACOUSTIC WALL COVERING, GREY
- DRY ERASE WALL COVERING, SEE **5 / A863.2**
- FIRE RETARDANT TREATED PLYWOOD
- VINYL COVERED TACKBOARD, SEE **4 / A863.2**
- CERAMIC WALL TILE, SEE FINISH SCHEDULE

GENERAL NOTES

A. PROVIDE BLOCKING FOR ALL WALL MOUNTED ACCESSORIES AND EQUIPMENT, SEE **28 / A863.2**

B. FOR TYPICAL ACCESSIBLE TOILET ROOM FIXTURE AND ACCESSORY MOUNTING HEIGHTS AND CLEARANCES, SEE **2 / A800.2** & **3 / A800.2**

KEY PLAN

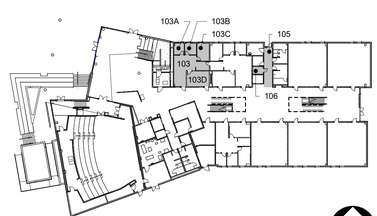

IDENTIFICATION STAMP
DIV. OF THE STATE ARCHITECT
APP: 02-122821 INC: 2
REVIEWED FOR
SS ☑ FLS ☑ ACS ☑
DATE: 11/20/2025

Teter, Inc. expressly reserves its common law copyright and other property rights in these plans. This document, the ideas and designs incorporated herein, as an instrument of professional service, is not to be used in whole or part, for any other project without prior written authorization.

MARK	DATE	DESCRIPTION
A.	11/13/2025	DSA BACKCHECK

LICENSED ARCHITECT STANDARDIZED CONSTRUCTION DOCUMENTS STATE OF CALIFORNIA

TETER, INC.
FRESNO HEADQUARTERS
VISALIA | BAKERSFIELD | MODESTO | SAN LUIS OBISPO
ARCHITECTS ENGINEERS CONNECTED

VISALIA CAMPUS UNIVERSITY CENTER
COLLEGE OF THE SEQUOIAS - INCREMENT 2
915 S. MOONEY BLVD
VISALIA, CALIFORNIA

DRAWING TITLE
INTERIOR ELEVATIONS - FIRST FLOOR

PROJECT NO.
22-12498

DRAWING
A914.2

\\tet-file1\Users\tara.chong_TETR\Documents\12498-A-UC_tara.chong.rvt
PLOT DATE: 11/10/2025 9:14:10 AM

\\tet-file1\Users\tara.chong_TETR\Documents\12498-A-UC_tara.chong.rvt

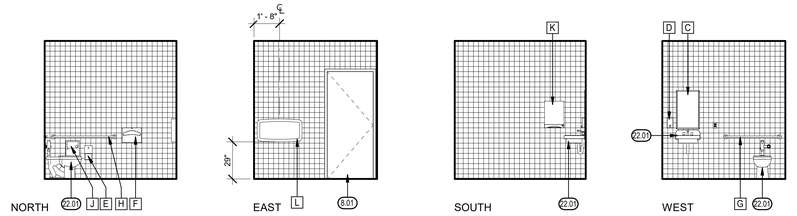

107 UNISEX RESTROOM
204 205 UNISEX RESTROOM SIM.

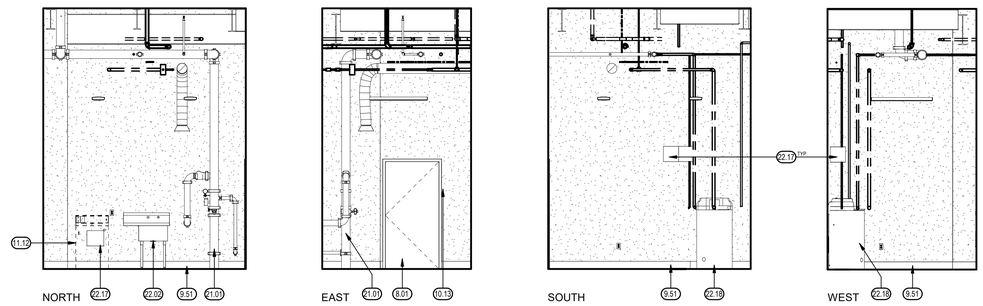

108 JANITOR

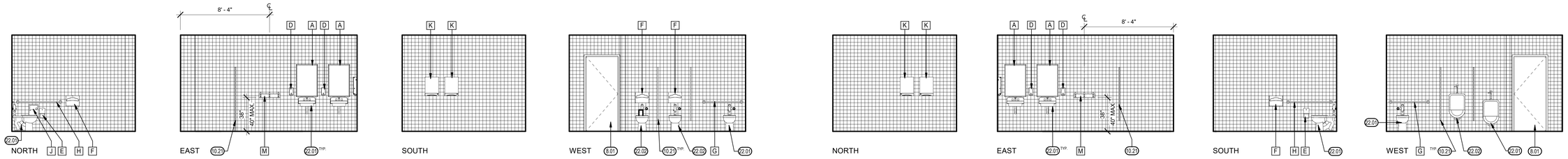

109 WOMEN'S RESTROOM
207 WOMEN'S RESTROOM SIM.

110 MEN'S RESTROOM
208 MEN'S RESTROOM SIM.

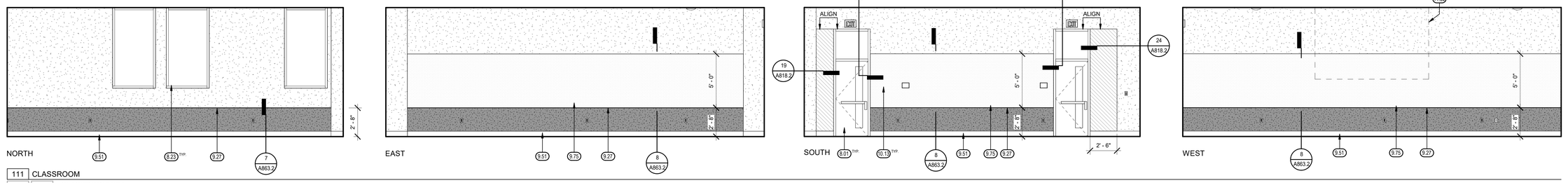

111 CLASSROOM
202 211 CLASSROOM SIM.

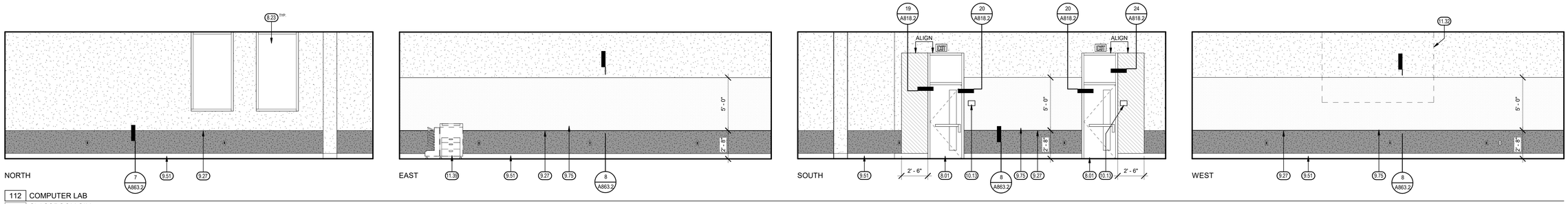

112 COMPUTER LAB
212 CLASSROOM SIM.

INTERIOR ELEVATIONS

1/4" = 1'-0" | 4

KEYNOTES (X.00)

8.01	DOOR AND FRAME AS SCHEDULED
8.23	ALUMINUM CURTAIN WALL, SEE WINDOW SCHEDULE
9.27	ALUMINUM REVEAL
9.51	TOPSET BASE AS SCHEDULED
9.75	DRY ERASE WALL COVERING
10.13	WALL SIGNAGE PER PLAN, TYP SEE **3 / A801.2**
10.21	TOILET COMPARTMENT/URINAL SCREEN, SEE **4 / A800.2**
11.12	WASHING MACHINE, OWNER FURNISHED AND CONTRACTOR INSTALLED
11.32	PROJECTION SCREEN, CEILING MOUNTED, RECESSED, SEE
11.39	PRINTER, OFCI
21.01	FIRE SPRINKLER RISER, SEE FIRE PROTECTION
22.01	ACCESSIBLE PLUMBING FIXTURE, SEE PLUMBING
22.02	PLUMBING FIXTURE, SEE PLUMBING
22.17	PLUMBING EQUIPMENT, SEE PLUMBING
22.18	WATER HEATER, SEE PLUMBING

TOILET ACCESSORY SCHEDULE

MARK	DESCRIPTION	MFR.	MODEL NO.	REMARKS
A	MIRROR (24" X 36")	BOBRICK	B-165	SURFACE MTD.
B	MIRROR (3'-0" X 5'-0")	BOBRICK	B-165	SURFACE MTD.
C	MIRROR (18" X 30")	BOBRICK	B-165	SURFACE MTD.
D	SOAP DISPENSER	BOBRICK	O.F.C.I.	SURFACE MTD.
E	TOILET TISSUE DISPENSER	BOBRICK	B-2888	SURFACE / PARTITION MTD.
F	TOILET SEAT COVER DISPENSER	BOBRICK	B-4221	SURFACE MTD.
G	GRAB BAR, REAR, SEE **19 / A800.2**	BOBRICK	B-6806 SERIES	42" LONG
H	GRAB BAR, SIDE, SEE **19 / A800.2**	BOBRICK	B-6806 SERIES	48" LONG
J	SANITARY NAPKIN DISPOSAL UNIT	BOBRICK	B-270	SURFACE MTD.
K	PAPER TOWEL DISPENSER	BOBRICK	B-262	SURFACE MTD.
L	DIAPER CHANGING STATION, SEE **17 / A800.2**	KOALA KARE	KB-300	SURFACE MTD.
M	COAT HOOK STRIP	BOBRICK	B-985	SURFACE MTD.

LEGEND

- PAINT COLOR 1 OVER GYPSUM BOARD, SEE FINISH SCHEDULE
- PAINT COLOR 2 OVER GYPSUM BOARD, SEE FINISH SCHEDULE
- PAINT COLOR 3 OVER GYPSUM BOARD, SEE FINISH SCHEDULE
- METAL PANEL 1 REPEAT SERIES OF 5 BOX RIB PANELS (BR2, BR2, BR4, BR2, BR3, SEE **1 / A820.2**), VERTICAL (SAME AS EXTERIOR ELEVATIONS
- METAL PANEL 2 FLUSH METAL PANEL, HORIZONTAL, (BROWN) (SAME AS EXTERIOR ELEVATIONS)
- METAL PANEL 3 FLUSH METAL PANEL, VERTICAL, (SILVER) (SAME AS EXTERIOR ELEVATIONS EXCEPT VERTICAL)
- FRP, WHITE. SEE **6 / A863.2**
- VINYL WALL COVERING, BRUSHED ALUMINUM SEE **2 / A863.2**
- ACOUSTIC WALL COVERING, GREY
- DRY ERASE WALL COVERING, SEE **5 / A863.2**
- FIRE RETARDANT TREATED PLYWOOD
- VINYL COVERED TACKBOARD, SEE **4 / A863.2**
- CERAMIC WALL TILE, SEE FINISH SCHEDULE

GENERAL NOTES

A. PROVIDE BLOCKING FOR ALL WALL MOUNTED ACCESSORIES AND EQUIPMENT, SEE **28 / A863.2**

B. FOR TYPICAL ACCESSIBLE TOILET ROOM FIXTURE AND ACCESSORY MOUNTING HEIGHTS AND CLEARANCES, SEE **2 / A800.2** & **3 / A800.2**

KEY PLAN

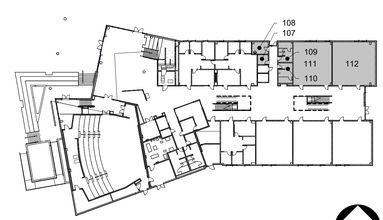

IDENTIFICATION STAMP
DIV. OF THE STATE ARCHITECT
APP: 02-122821 INC: 2
REVIEWED FOR
SS ☑ FLS ☑ ACS ☑
DATE: 11/20/2025

Teter, Inc. expressly reserves its common law copyright and other property rights in these plans. This document, the ideas and designs incorporated herein, as an instrument of professional service, is not to be used in whole or in part, for any other project without prior written authorization.

MARK	DATE	DESCRIPTION
A.	11/13/2025	DSA BACKCHECK

LICENSED ARCHITECT ★ TIMOTHY J. CONNELLY ★ No. C-29021 ★ STATE OF CALIFORNIA

TETER, INC.
FRESNO HEADQUARTERS
VISALIA | BAKERSFIELD | MODESTO | SAN LUIS OBISPO
ARCHITECTS ENGINEERS CONNECTED

VISALIA CAMPUS UNIVERSITY CENTER
COLLEGE OF THE SEQUOIAS - INCREMENT 2
915 S. MOONEY BLVD
VISALIA, CALIFORNIA

DRAWING TITLE
INTERIOR ELEVATIONS - FIRST FLOOR

PROJECT NO.
22-12498

DRAWING
A915.2

PLOT DATE: 11/10/2025 9:15:06 AM

\\tet-file1\Users\tara.chong_TETR\Documents\12498-A-UC_tara.chong.rvt

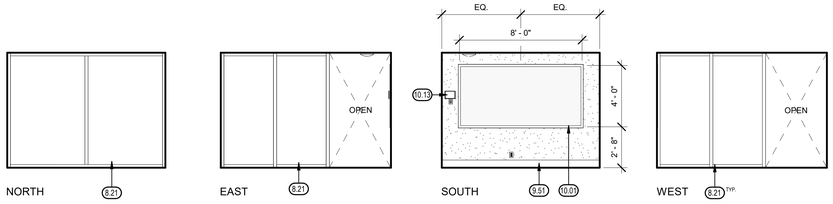

113 MEETING

114 MEETING SIM.

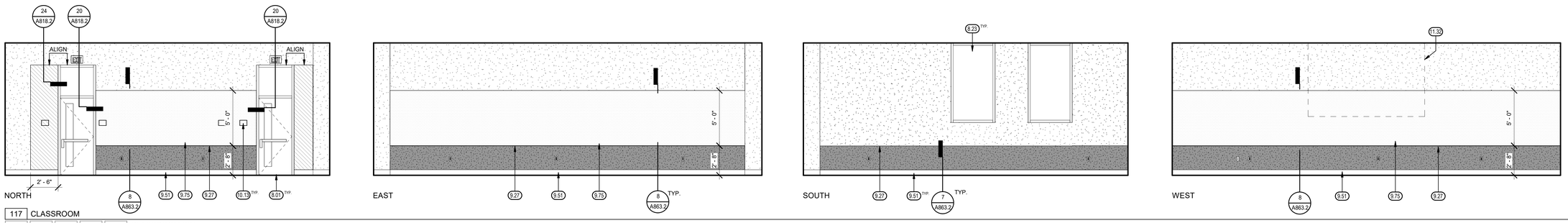

117 CLASSROOM

115 116 215 216 217 CLASSROOM SIM.

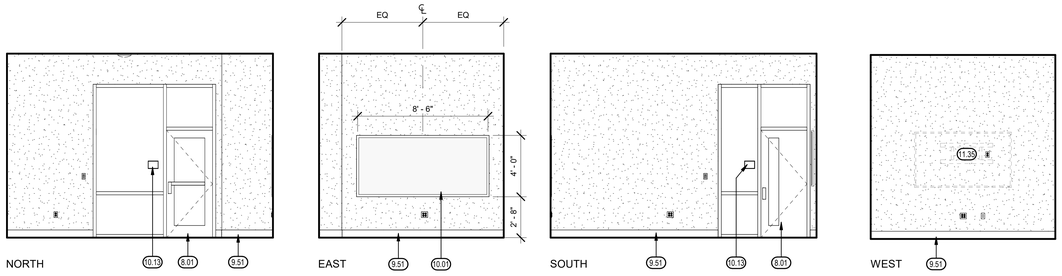

118D MEETING

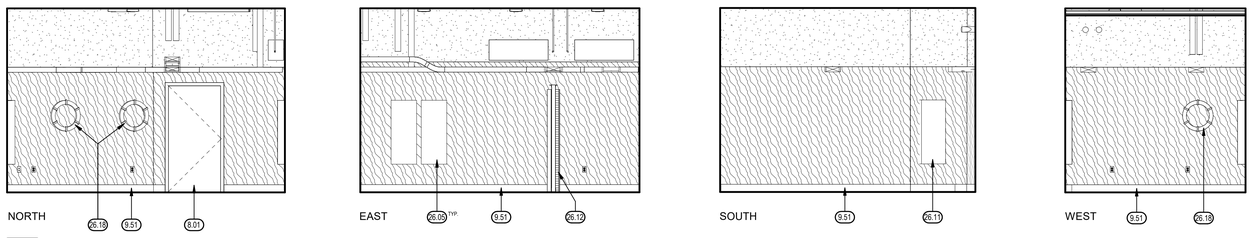

119 DATA

INTERIOR ELEVATIONS

1/4" = 1'-0" | 4

KEYNOTES (30.00)

8.01	DOOR AND FRAME AS SCHEDULED
8.21	ALUMINUM STOREFRONT, SEE WINDOW SCHEDULE
8.23	ALUMINUM CURTAIN WALL, SEE WINDOW SCHEDULE
9.27	ALUMINUM REVEAL
9.51	TOPSET BASE AS SCHEDULED
9.75	DRY ERASE WALL COVERING
10.01	MARKER BOARD, SEE **20 / A863.2**
10.13	WALL SIGNAGE PER PLAN, TYP SEE **3 / A801.2**
11.32	PROJECTION SCREEN, CEILING MOUNTED, RECESSED, SEE **28 / A841.2**
11.35	MONITOR BRACKET OFCI, WALL MOUNTED, SEE **10 / A864.2**
26.05	ELECTRICAL PANEL, SEE ELECTRICAL
26.11	SWITCHBOARD, SEE ELECTRICAL
26.12	DATA RACK, SEE ELECTRICAL
26.18	DATA CABLE STORAGE RING, SEE ELECTRICAL

LEGEND

- PAINT COLOR 1 OVER GYPSUM BOARD, SEE FINISH SCHEDULE
- PAINT COLOR 2 OVER GYPSUM BOARD, SEE FINISH SCHEDULE
- PAINT COLOR 3 OVER GYPSUM BOARD, SEE FINISH SCHEDULE
- METAL PANEL 1 REPEAT SERIES OF 5 BOX RIB PANELS (BR2, BR2, BR4, BR2, BR3, SEE **1 / A820.2**), VERTICAL (SAME AS EXTERIOR ELEVATIONS
- METAL PANEL 2 FLUSH METAL PANEL, HORIZONTAL, (BROWN) (SAME AS EXTERIOR ELEVATIONS)
- METAL PANEL 3 FLUSH METAL PANEL, VERTICAL, (SILVER) (SAME AS EXTERIOR ELEVATIONS EXCEPT VERTICAL)
- FRP, WHITE. SEE **6 / A863.2**
- VINYL WALL COVERING, BRUSHED ALUMINUM SEE **2 / A863.2**
- ACOUSTIC WALL COVERING, GREY
- DRY ERASE WALL COVERING, SEE **5 / A863.2**
- FIRE RETARDANT TREATED PLYWOOD
- VINYL COVERED TACKBOARD, SEE **4 / A863.2**
- CERAMIC WALL TILE, SEE FINISH SCHEDULE

GENERAL NOTES

A. PROVIDE BLOCKING FOR ALL WALL MOUNTED ACCESSORIES AND EQUIPMENT, SEE **28 / A863.2**

B. FOR TYPICAL ACCESSIBLE TOILET ROOM FIXTURE AND ACCESSORY MOUNTING HEIGHTS AND CLEARANCES, SEE **2 / A800.2** & **3 / A800.2**

KEY PLAN

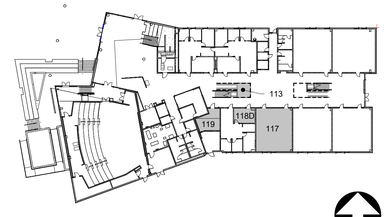

IDENTIFICATION STAMP
DIV. OF THE STATE ARCHITECT
APP: 02-122821 INC: 2
REVIEWED FOR
SS ☑ FLS ☑ ACS ☑
DATE: 11/20/2025

Teter, Inc. expressly reserves its statutory law copyright and other property rights in these plans. This document, the ideas and designs incorporated herein, as an instrument of professional service, is not to be used in whole or part, for any other project without prior written authorization.

MARK	DATE	DESCRIPTION
A.	11/13/2025	DSA BACKCHECK

LICENSED ARCHITECT ★ STANDARD OF CONDUCT ★ STATE OF CALIFORNIA

TETER, INC.
FRESNO HEADQUARTERS
VISALIA | BAKERSFIELD | MODESTO | SAN LUIS OBISPO
ARCHITECTS ENGINEERS CONNECTED

VISALIA CAMPUS UNIVERSITY CENTER
COLLEGE OF THE SEQUOIAS - INCREMENT 2
915 S. MOONEY BLVD
VISALIA, CALIFORNIA

DRAWING TITLE
INTERIOR ELEVATIONS - FIRST FLOOR

PROJECT NO.
22-12498

DRAWING
A916.2

PLOT DATE: 11/10/2025 9:15:47 AM

\\tet-file1\Users\tara.chong_TETR\Documents\12498-A-UC_tara.chong.rvt

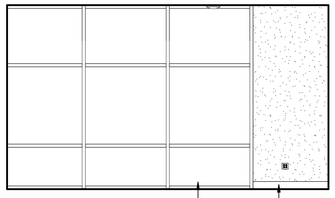

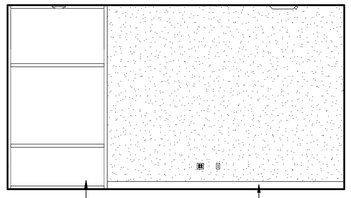

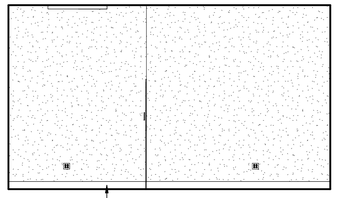

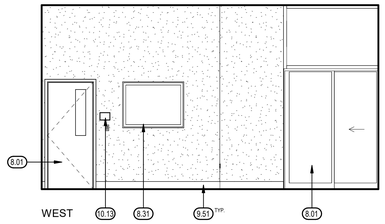

120 COS ADMIN

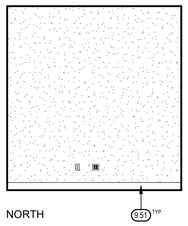

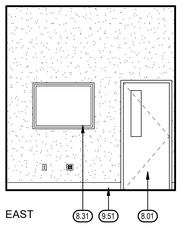

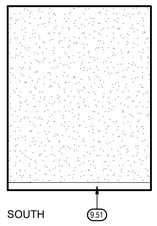

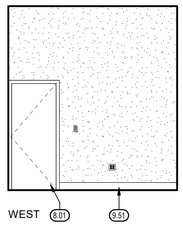

120A OFFICE

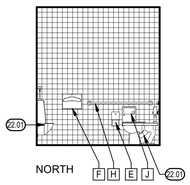

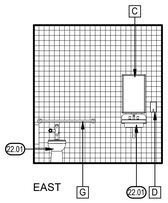

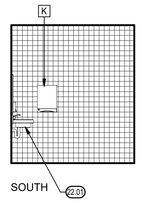

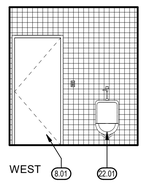

121 UNISEX RESTROOM
223 UNISEX RESTROOM SIM.

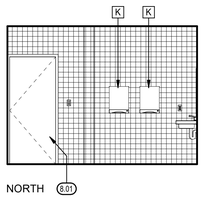

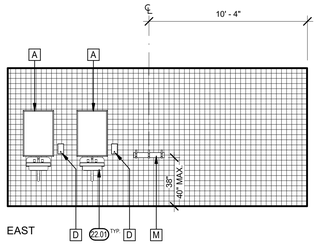

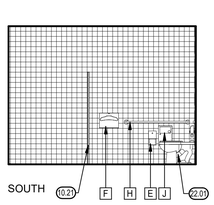

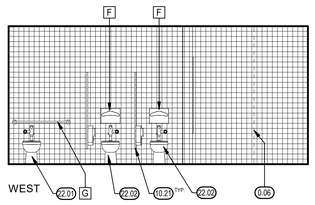

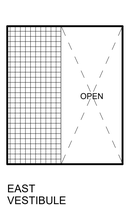

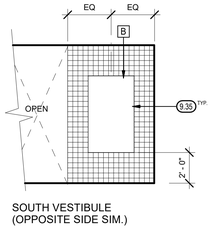

122 WOMEN'S RESTROOM
224 WOMEN'S RESTROOM SIM.

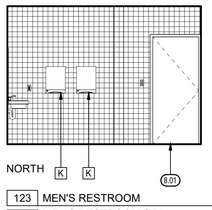

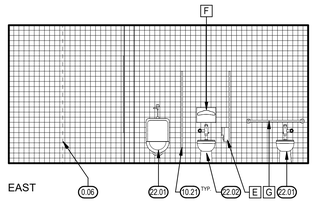

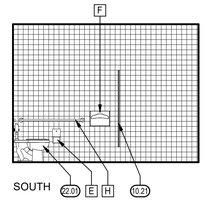

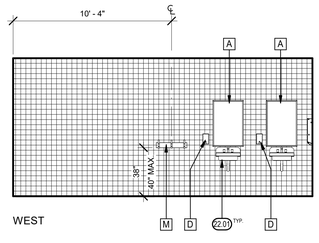

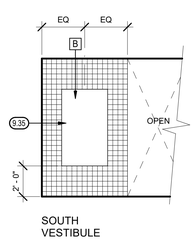

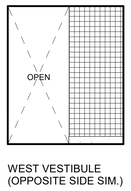

123 MEN'S RESTROOM
225 MEN'S RESTROOM SIM.

INTERIOR ELEVATIONS

1/4" = 1'-0" | 4

KEYNOTES 30.00

0.06	LINE OF WALL IN FOREGROUND
8.01	DOOR AND FRAME AS SCHEDULED
8.21	ALUMINUM STOREFRONT, SEE WINDOW SCHEDULE
8.31	WINDOW AS SCHEDULED
9.35	CERAMIC TILE WALL SURFACE TO EXTEND BEHIND MIRROR
9.51	TOPSET BASE AS SCHEDULED
10.13	WALL SIGNAGE PER PLAN, TYP SEE **3 / A801.2**
10.21	TOILET COMPARTMENT/URINAL SCREEN, SEE **5 / A800.2**
22.01	ACCESSIBLE PLUMBING FIXTURE, SEE PLUMBING
22.02	PLUMBING FIXTURE, SEE PLUMBING

TOILET ACCESSORY SCHEDULE

MARK	DESCRIPTION	MFR.	MODEL NO.	REMARKS
A	MIRROR (24" X 36")	BOBRICK	B-165	SURFACE MTD.
B	MIRROR (3'-0" X 5'-0")	BOBRICK	B-165	SURFACE MTD.
C	MIRROR (18" X 30")	BOBRICK	B-165	SURFACE MTD.
D	SOAP DISPENSER	BOBRICK	O.F.C.I.	SURFACE MTD.
E	TOILET TISSUE DISPENSER	BOBRICK	B-2888	SURFACE / PARTITION MTD.
F	TOILET SEAT COVER DISPENSER	BOBRICK	B-4221	SURFACE MTD.
G	GRAB BAR, REAR, SEE **19 / A800.2**	BOBRICK	B-6806 SERIES	42" LONG
H	GRAB BAR, SIDE, SEE **19 / A800.2**	BOBRICK	B-6806 SERIES	48" LONG
J	SANITARY NAPKIN DISPOSAL UNIT	BOBRICK	B-270	SURFACE MTD.
K	PAPER TOWEL DISPENSER	BOBRICK	B-262	SURFACE MTD.
L	DIAPER CHANGING STATION, SEE **17 / A800.2**	KOALA KARE	KB-300	SURFACE MTD.
M	COAT HOOK STRIP	BOBRICK	B-985	SURFACE MTD.

LEGEND

- PAINT COLOR 1 OVER GYPSUM BOARD, SEE FINISH SCHEDULE
- PAINT COLOR 2 OVER GYPSUM BOARD, SEE FINISH SCHEDULE
- PAINT COLOR 3 OVER GYPSUM BOARD, SEE FINISH SCHEDULE
- METAL PANEL 1 REPEAT SERIES OF 5 BOX RIB PANELS (BR2, BR2, BR4, BR2, BR3, SEE **1 / A820.2**), VERTICAL (SAME AS EXTERIOR ELEVATIONS
- METAL PANEL 2 FLUSH METAL PANEL, HORIZONTAL, (BROWN) (SAME AS EXTERIOR ELEVATIONS)
- METAL PANEL 3 FLUSH METAL PANEL, VERTICAL, (SILVER) (SAME AS EXTERIOR ELEVATIONS EXCEPT VERTICAL)
- FRP, WHITE. SEE **6 / A863.2**
- VINYL WALL COVERING, BRUSHED ALUMINUM SEE **2 / A863.2**
- ACOUSTIC WALL COVERING, GREY
- DRY ERASE WALL COVERING, SEE **5 / A863.2**
- FIRE RETARDANT TREATED PLYWOOD
- VINYL COVERED TACKBOARD, SEE **4 / A863.2**
- CERAMIC WALL TILE, SEE FINISH SCHEDULE

GENERAL NOTES

A. PROVIDE BLOCKING FOR ALL WALL MOUNTED ACCESSORIES AND EQUIPMENT, SEE **28 / A863.2**

B. FOR TYPICAL ACCESSIBLE TOILET ROOM FIXTURE AND ACCESSORY MOUNTING HEIGHTS AND CLEARANCES, SEE **2 / A800.2** & **3 / A800.2**

KEY PLAN

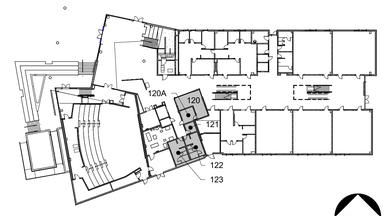

IDENTIFICATION STAMP
DIV. OF THE STATE ARCHITECT
APP: 02-122821 INC: 2
REVIEWED FOR
SS ☑ FLS ☑ ACS ☑
DATE: 11/20/2025

Teter, Inc. expressly reserves its common law copyright and other property rights in these plans. This document, the ideas and designs incorporated herein, as an instrument of professional service, is not to be used in whole or part, for any other project without prior written authorization.

MARK	DATE	DESCRIPTION
A.	11/13/2025	DSA BACKCHECK

TETER, INC.
FRESNO HEADQUARTERS
VISALIA | BAKERSFIELD | MODESTO | SAN LUIS OBISPO
ARCHITECTS ENGINEERS CONNECTED

TETER

VISALIA CAMPUS UNIVERSITY CENTER
COLLEGE OF THE SEQUOIAS - INCREMENT 2
915 S. MOONEY BLVD
VISALIA, CALIFORNIA

DRAWING TITLE
INTERIOR ELEVATIONS - FIRST FLOOR

PROJECT NO.
22-12498

DRAWING
A917.2

PLOT DATE: 11/10/2025 9:16:42 AM

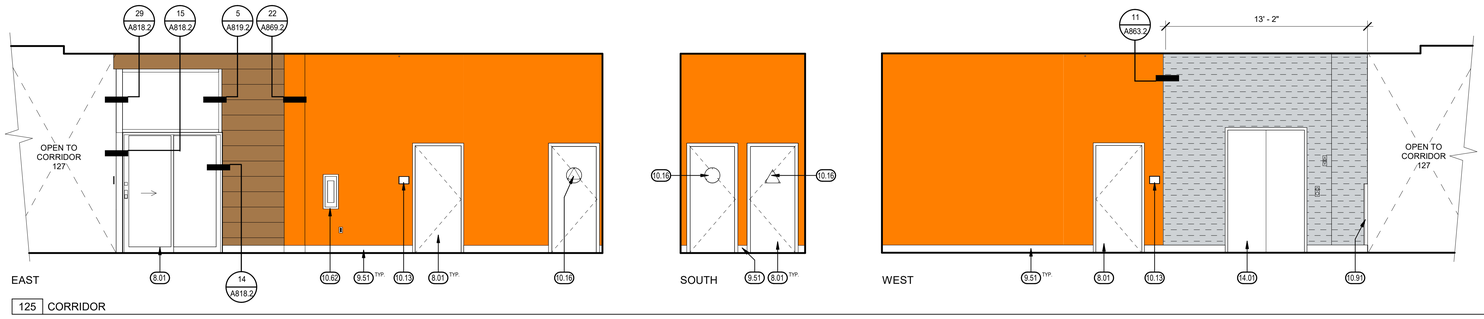

125 CORRIDOR

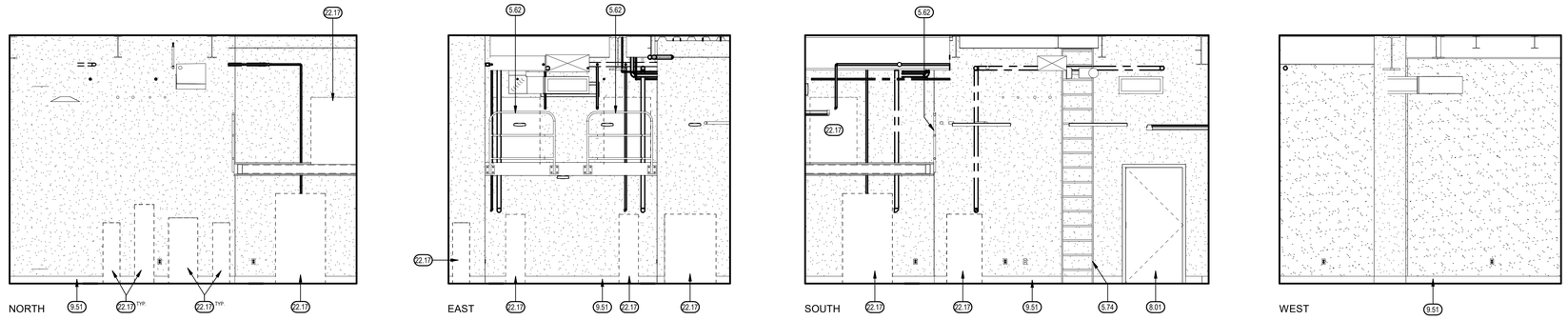

130A MECH.

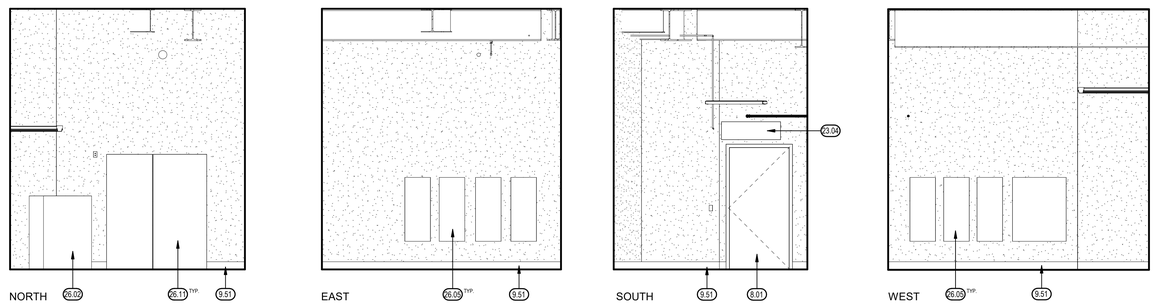

131 ELECTRICAL

INTERIOR ELEVATIONS

1/4" = 1'-0" | 4

KEYNOTES (x.xx)

5.62	GUARDRAIL AT PLATFORM, TYP. SEE ELEVATION
5.74	ACCESS LADDER, SEE **26 / A838.2**
8.01	DOOR AND FRAME AS SCHEDULED
9.51	TOPSET BASE AS SCHEDULED
10.13	WALL SIGNAGE PER PLAN, TYP SEE **3 / A801.2**
10.16	TOILET ROOM DOOR GEOMETRIC SYMBOL, SEE **5 / A801.2**
10.62	FIRE EXTINGUISHER CABINET AND FIRE EXTINGUISHER
10.91	CORNER GUARD, SEE **10 / A863.2**
14.01	ELEVATOR
22.17	PLUMBING EQUIPMENT, SEE PLUMBING
23.04	MECHANICAL EQUIPMENT, SEE MECHANICAL, TYP.
26.02	TRANSFORMER, SEE ELECTRICAL
26.05	ELECTRICAL PANEL, SEE ELECTRICAL
26.11	SWITCHBOARD, SEE ELECTRICAL

LEGEND

- PAINT COLOR 1 OVER GYPSUM BOARD, SEE FINISH SCHEDULE
- PAINT COLOR 2 OVER GYPSUM BOARD, SEE FINISH SCHEDULE
- PAINT COLOR 3 OVER GYPSUM BOARD, SEE FINISH SCHEDULE
- METAL PANEL 1 REPEAT SERIES OF 5 BOX RIB PANELS (BR2, BR2, BR4, BR2, BR3, SEE **1 / A820.2**), VERTICAL (SAME AS EXTERIOR ELEVATIONS
- METAL PANEL 2 FLUSH METAL PANEL, HORIZONTAL, (BROWN) (SAME AS EXTERIOR ELEVATIONS)
- METAL PANEL 3 FLUSH METAL PANEL, VERTICAL, (SILVER) (SAME AS EXTERIOR ELEVATIONS EXCEPT VERTICAL)
- FRP, WHITE. SEE **6 / A863.2**
- VINYL WALL COVERING, BRUSHED ALUMINUM SEE **2 / A863.2**
- ACOUSTIC WALL COVERING, GREY
- DRY ERASE WALL COVERING, SEE **5 / A863.2**
- FIRE RETARDANT TREATED PLYWOOD
- VINYL COVERED TACKBOARD, SEE **4 / A863.2**
- CERAMIC WALL TILE, SEE FINISH SCHEDULE

GENERAL NOTES

A. PROVIDE BLOCKING FOR ALL WALL MOUNTED ACCESSORIES AND EQUIPMENT, SEE **28 / A863.2**

B. FOR TYPICAL ACCESSIBLE TOILET ROOM FIXTURE AND ACCESSORY MOUNTING HEIGHTS AND CLEARANCES, SEE **2 / A800.2** & **3 / A800.2**

KEY PLAN

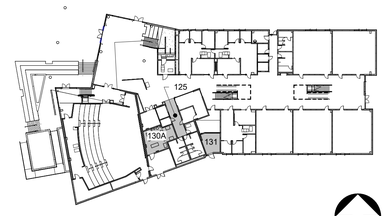

IDENTIFICATION STAMP
DIV. OF THE STATE ARCHITECT
APP: 02-122821 INC: 2
REVIEWED FOR
SS ☑ FLS ☑ ACS ☑
DATE: 11/20/2025

Teter, Inc. expressly reserves its common law copyright and other property rights in these plans. This document, the ideas and designs incorporated herein, as an instrument of professional service, is not to be used in whole or in part, for any other project without prior written authorization.

MARK	DATE	DESCRIPTION
A.	11/13/2025	DSA BACKCHECK

TETER, INC.
ARCHITECTS ENGINEERS CONNECTED
FRESNO HEADQUARTERS
VISALIA | BAKERSFIELD | MODESTO | SAN LUIS OBISPO

VISALIA CAMPUS UNIVERSITY CENTER
COLLEGE OF THE SEQUOIAS - INCREMENT 2
915 S. MOONEY BLVD
VISALIA, CALIFORNIA

DRAWING TITLE
INTERIOR ELEVATIONS - FIRST FLOOR

PROJECT NO.
22-12498

DRAWING
A918.2

\\tet-file1\Users\tara.chong_TETR\Documents\12498-A-UC_tara.chong.rvt

PLOT DATE: 11/10/2025 9:17:16 AM

\\tet-file1\Users\tara.chong_TETR\Documents\12498-A-UC_tara.chong.rvt

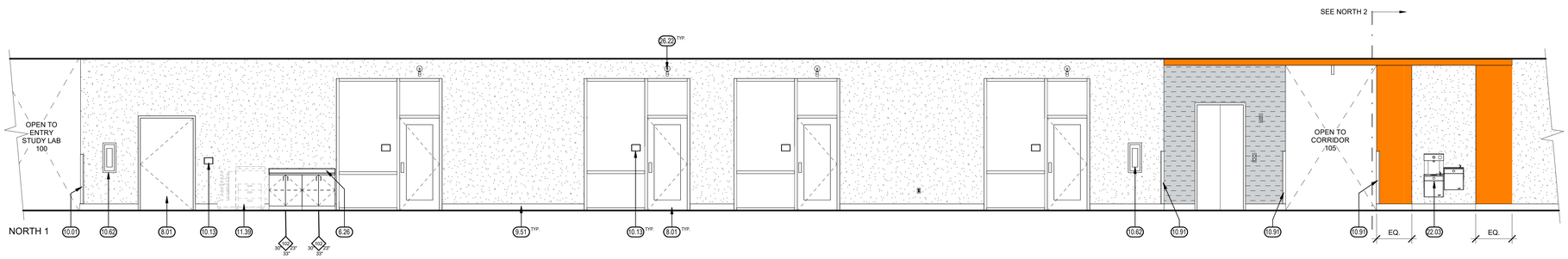

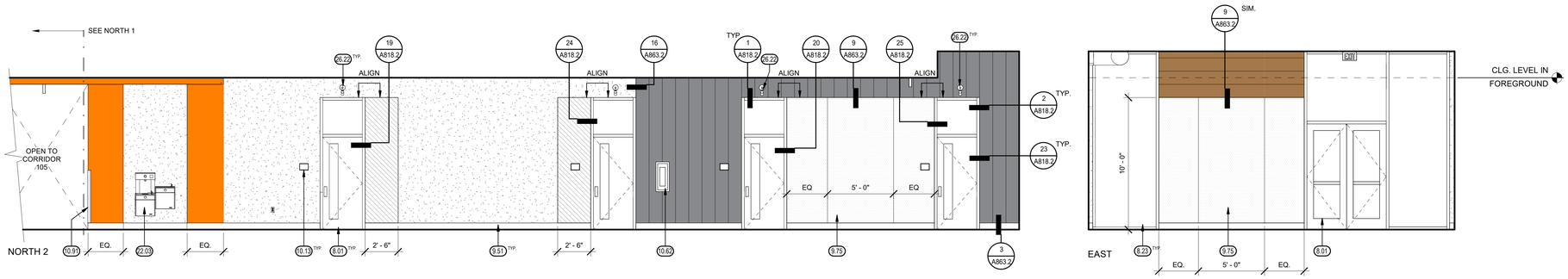

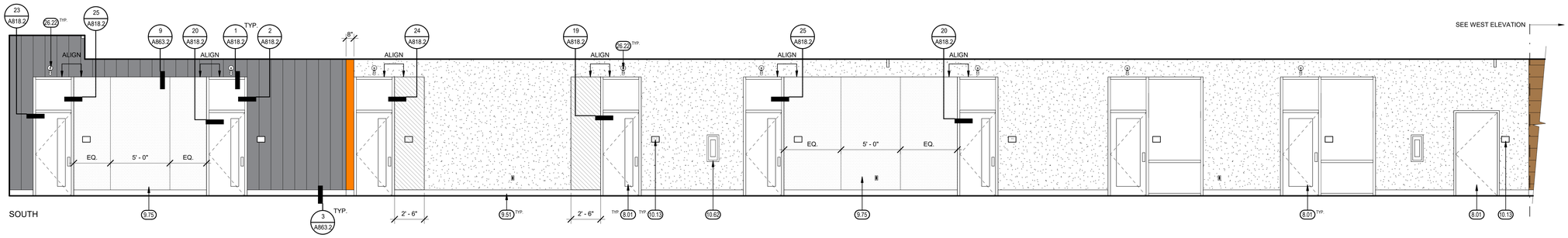

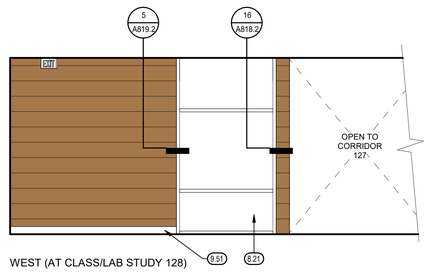

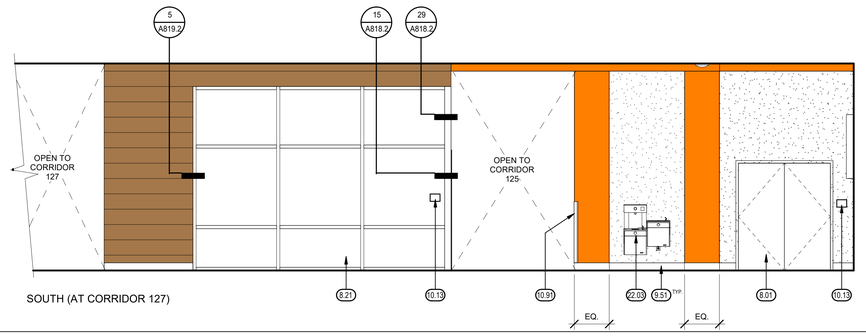

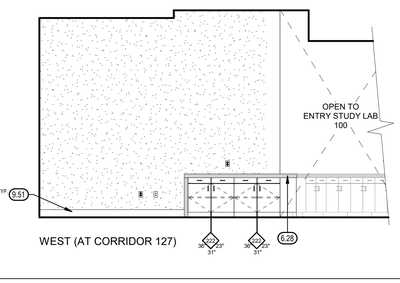

CORRIDOR 127, CLASS/LAB STUDY 128 & 129

INTERIOR ELEVATIONS

1/4" = 1'-0" | 4

KEYNOTES (XX.XX)

6.26	PLASTIC LAMINATE COUNTER TOP, SEE INTERIOR ELEVATIONS
6.28	SOLID SURFACE COUNTER TOP
8.01	DOOR AND FRAME AS SCHEDULED
8.21	ALUMINUM STOREFRONT, SEE WINDOW SCHEDULE
8.23	ALUMINUM CURTAIN WALL, SEE WINDOW SCHEDULE
9.51	TOPSET BASE AS SCHEDULED
9.75	DRY ERASE WALL COVERING
10.01	MARKER BOARD, SEE **20 / A863.2**
10.13	WALL SIGNAGE PER PLAN, TYP SEE **3 / A801.2**
10.62	FIRE EXTINGUISHER CABINET AND FIRE EXTINGUISHER
10.91	CORNER GUARD, SEE **10 / A863.2**
11.39	PRINTER, OFCI
22.03	HIGH-LOW DRINKING FQUNTAIN WITH BOTTLE FILLER, SEE PLUMBING, AND **15 / A800.2**
26.22	WALL MOUNTED LIGHT FIXTURE, SEE ELECTRICAL AND **25 / A863.2**

LEGEND

- PAINT COLOR 1 OVER GYPSUM BOARD, SEE FINISH SCHEDULE
- PAINT COLOR 2 OVER GYPSUM BOARD, SEE FINISH SCHEDULE
- PAINT COLOR 3 OVER GYPSUM BOARD, SEE FINISH SCHEDULE
- METAL PANEL 1 REPEAT SERIES OF 5 BOX RIB PANELS (BR2, BR2, BR4, BR2, BR3, SEE **1 / A820.2**), VERTICAL (SAME AS EXTERIOR ELEVATIONS
- METAL PANEL 2 FLUSH METAL PANEL, HORIZONTAL, (BROWN) (SAME AS EXTERIOR ELEVATIONS)
- METAL PANEL 3 FLUSH METAL PANEL, VERTICAL, (SILVER) (SAME AS EXTERIOR ELEVATIONS EXCEPT VERTICAL)
- FRP, WHITE. SEE **6 / A863.2**
- VINYL WALL COVERING, BRUSHED ALUMINUM SEE **2 / A863.2**
- ACOUSTIC WALL COVERING, GREY
- DRY ERASE WALL COVERING, SEE **5 / A863.2**
- FIRE RETARDANT TREATED PLYWOOD
- VINYL COVERED TACKBOARD, SEE **4 / A863.2**
- CERAMIC WALL TILE, SEE FINISH SCHEDULE

GENERAL NOTES

A. PROVIDE BLOCKING FOR ALL WALL MOUNTED ACCESSORIES AND EQUIPMENT, SEE **28 / A863.2**

B. FOR TYPICAL ACCESSIBLE TOILET ROOM FIXTURE AND ACCESSORY MOUNTING HEIGHTS AND CLEARANCES, SEE **2 / A800.2** & **3 / A800.2**

KEY PLAN

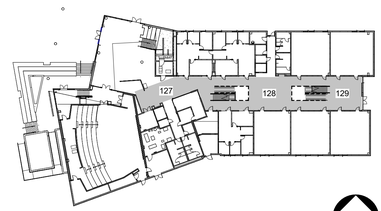

PLOT DATE: 11/10/2025 9:17:44 AM

IDENTIFICATION STAMP
DIV. OF THE STATE ARCHITECT
APP: 02-122821 INC: 2
REVIEWED FOR
SS ☑ FLS ☑ ACS ☑
DATE: 11/20/2025

Teter, Inc. expressly reserves its common law copyright and other property rights in these plans. This document, the ideas and designs incorporated herein, as an instrument of professional service, is not to be used in whole or part, for any other project without prior written authorization.

MARK	DATE	DESCRIPTION
A.	11/13/2025	DSA BACKCHECK

LICENSED ARCHITECT ★ CHRISTOPHER J. CONNELLY ★ No. C-32121 ★ STATE OF CALIFORNIA

TETER, INC.
FRESNO HEADQUARTERS
VISALIA | BAKERSFIELD | MODESTO | SAN LUIS OBISPO
ARCHITECTS ENGINEERS CONNECTED

TETER

VISALIA CAMPUS UNIVERSITY CENTER
COLLEGE OF THE SEQUOIAS - INCREMENT 2
915 S. MOONEY BLVD
VISALIA, CALIFORNIA

DRAWING TITLE
INTERIOR ELEVATIONS - FIRST FLOOR

PROJECT NO.
22-12498

DRAWING
A919.2

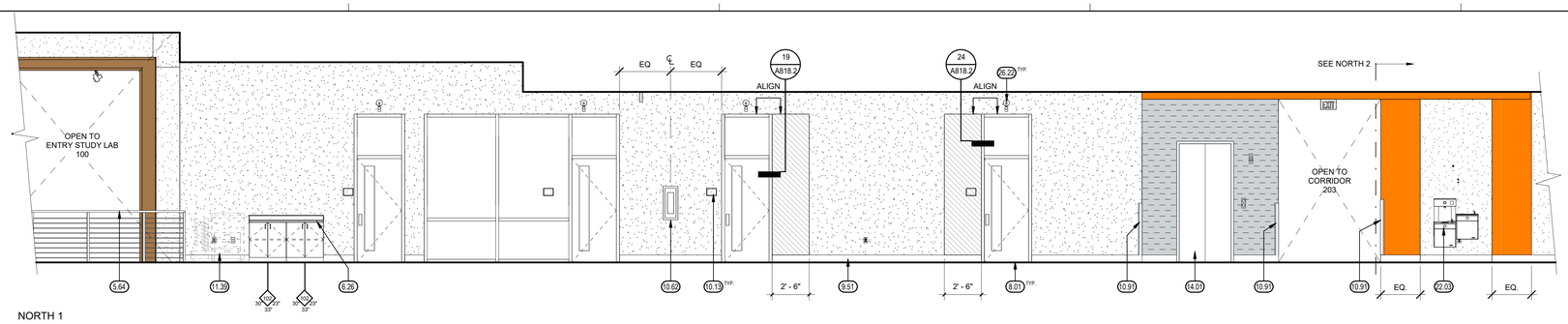

NORTH 1

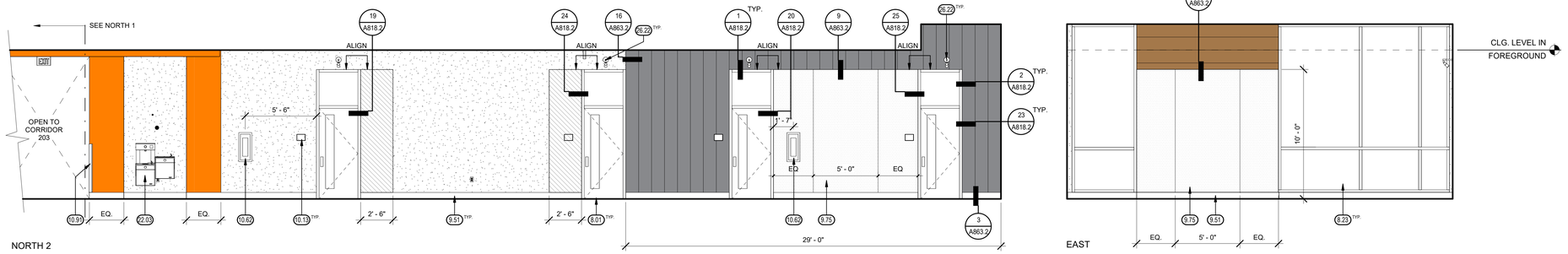

NORTH 2

EAST

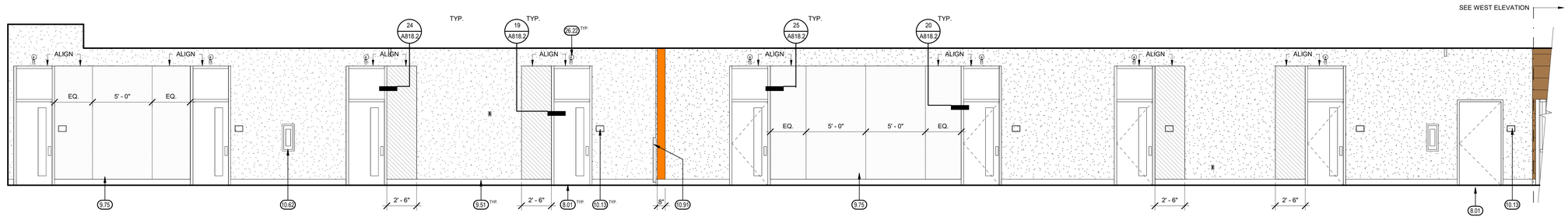

SOUTH 1

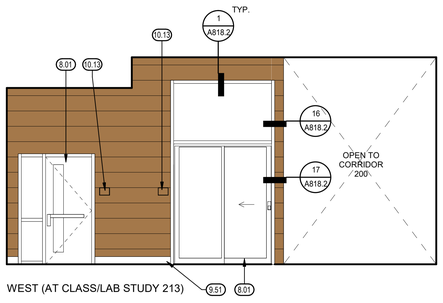

WEST (AT CLASS/LAB STUDY 213)

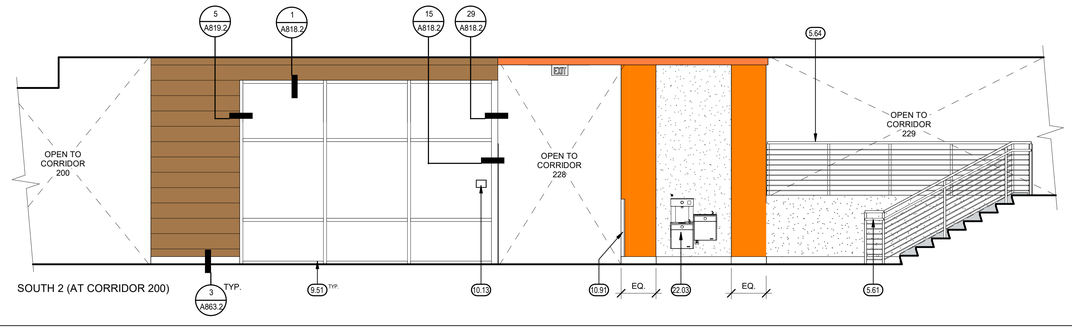

SOUTH 2 (AT CORRIDOR 200)

CORRIDOR 200, CLASS/LAB STUDY 213 & 214

INTERIOR ELEVATIONS

1/4" = 1'-0" | 4

KEYNOTES (00.00)

5.61	HANDRAIL, TYP. SEE **2 / A852.2**
5.64	GUARDRAIL, TYP. SEE **24 / A850.2**
6.26	PLASTIC LAMINATE COUNTER TOP, SEE INTERIOR ELEVATIONS
8.01	DOOR AND FRAME AS SCHEDULED
8.23	ALUMINUM CURTAIN WALL, SEE WINDOW SCHEDULE
9.51	TOPSET BASE AS SCHEDULED
9.75	DRY ERASE WALL COVERING
10.13	WALL SIGNAGE PER PLAN, TYP SEE **3 / A801.2**
10.62	FIRE EXTINGUISHER CABINET AND FIRE EXTINGUISHER
10.91	CORNER GUARD, SEE **10 / A863.2**
11.39	PRINTER, OFCI
14.01	ELEVATOR
22.03	HIGH-LOW DRINKING FOUNTAIN WITH BOTTLE FILLER, SEE PLUMBING, AND **15 / A800.2**
26.22	WALL MOUNTED LIGHT FIXTURE, SEE ELECTRICAL AND **25 / A863.2**

LEGEND

- PAINT COLOR 1 OVER GYPSUM BOARD, SEE FINISH SCHEDULE
- PAINT COLOR 2 OVER GYPSUM BOARD, SEE FINISH SCHEDULE
- PAINT COLOR 3 OVER GYPSUM BOARD, SEE FINISH SCHEDULE
- METAL PANEL 1 REPEAT SERIES OF 5 BOX RIB PANELS (BR2, BR2, BR4, BR2, BR3, SEE **1 / A820.2**), VERTICAL (SAME AS EXTERIOR ELEVATIONS
- METAL PANEL 2 FLUSH METAL PANEL, HORIZONTAL, (BROWN) (SAME AS EXTERIOR ELEVATIONS)
- METAL PANEL 3 FLUSH METAL PANEL, VERTICAL, (SILVER) (SAME AS EXTERIOR ELEVATIONS EXCEPT VERTICAL)
- FRP, WHITE. SEE **6 / A863.2**
- VINYL WALL COVERING, BRUSHED ALUMINUM SEE **2 / A863.2**
- ACOUSTIC WALL COVERING, GREY
- DRY ERASE WALL COVERING, SEE **5 / A863.2**
- FIRE RETARDANT TREATED PLYWOOD
- VINYL COVERED TACKBOARD, SEE **4 / A863.2**
- CERAMIC WALL TILE, SEE FINISH SCHEDULE

GENERAL NOTES

A. PROVIDE BLOCKING FOR ALL WALL MOUNTED ACCESSORIES AND EQUIPMENT, SEE **28 / A863.2**

B. FOR TYPICAL ACCESSIBLE TOILET ROOM FIXTURE AND ACCESSORY MOUNTING HEIGHTS AND CLEARANCES, SEE **2 / A800.2** & **3 / A800.2**

KEY PLAN

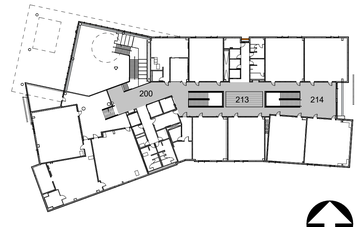

NORTH

PLOT DATE: 11/10/2025 9:18:12 AM

\\tet-file1\Users\tara.chong_TETR\Documents\12498-A-UC_tara.chong.rvt

IDENTIFICATION STAMP
DIV. OF THE STATE ARCHITECT
APP: 02-122821 INC: 2
REVIEWED FOR
SS ☑ FLS ☑ ACS ☑
DATE: 11/20/2025

Teter, Inc. expressly reserves its common law copyright and other property rights in these plans. This document, the ideas and designs incorporated herein, as an instrument of professional service, is not to be used in whole or in part, for any other purpose without prior written authorization.

MARK	DATE	DESCRIPTION
A.	11/13/2025	DSA BACKCHECK

LICENSED ARCHITECT STATE OF CALIFORNIA

TETER, INC.
FRESNO HEADQUARTERS
VISALIA | BAKERSFIELD | MODESTO | SAN LUIS OBISPO
ARCHITECTS ENGINEERS CONNECTED

TETER

VISALIA CAMPUS UNIVERSITY CENTER
COLLEGE OF THE SEQUOIAS - INCREMENT 2
915 S. MOONEY BLVD
VISALIA, CALIFORNIA

DRAWING TITLE
INTERIOR ELEVATIONS - SECOND FLOOR

PROJECT NO.
22-12498

DRAWING
A920.2

\\tet-file1\Users\tara.chong_TETR\Documents\12498-A-UC_tara.chong.rvt

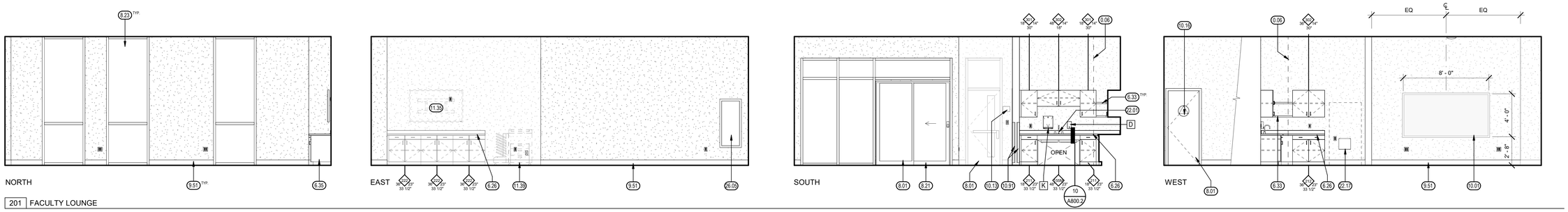

201 FACULTY LOUNGE

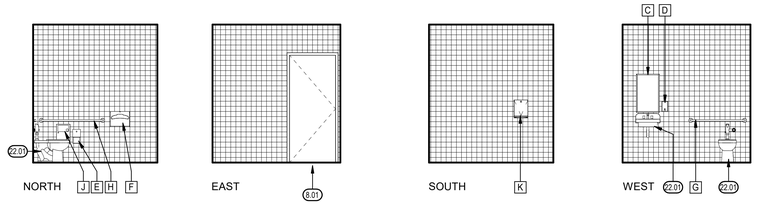

201A UNISEX RESTROOM

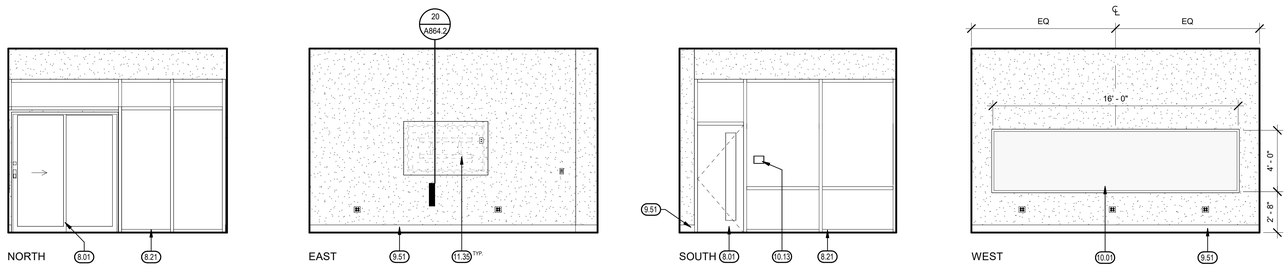

201B MEETING

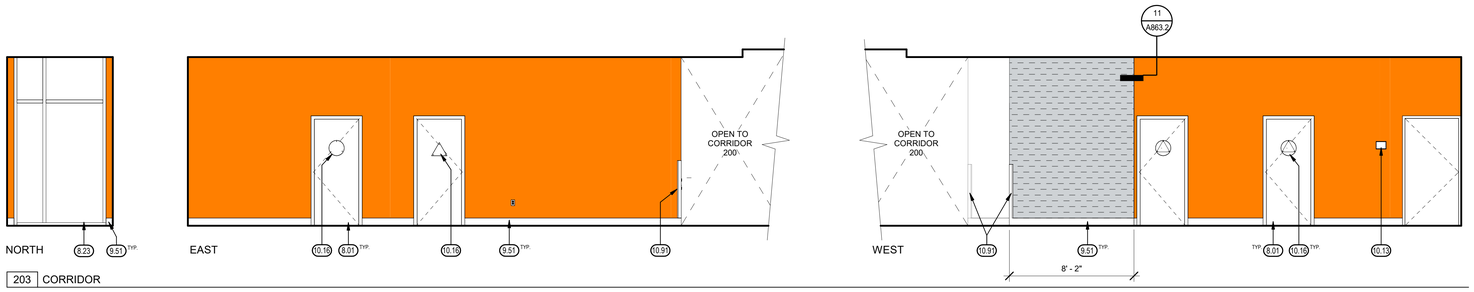

203 CORRIDOR



206 JANITOR

INTERIOR ELEVATIONS

1/4" = 1'-0" | 4

KEYNOTES (30.00)

0.06	LINE OF WALL IN FOREGROUND
5.71	LADDER TO ROOF, SEE **23 / A835.2**
6.26	PLASTIC LAMINATE COUNTER TOP, SEE INTERIOR ELEVATIONS
6.33	PLASTIC LAMINATE SHELF
6.35	PLASTIC LAMINATE END PANEL
8.01	DOOR AND FRAME AS SCHEDULED
8.21	ALUMINUM STOREFRONT, SEE WINDOW SCHEDULE
8.23	ALUMINUM CURTAIN WALL, SEE WINDOW SCHEDULE
9.51	TOPSET BASE AS SCHEDULED
10.01	MARKER BOARD, SEE **20 / A863.2**
10.13	WALL SIGNAGE PER PLAN, TYP SEE **3 / A801.2**
10.16	TOILET ROOM DOOR GEOMETRIC SYMBOL, SEE **5 / A801.2**
10.91	CORNER GUARD, SEE **10 / A863.2**
11.35	MONITOR BRACKET OFCI, WALL MOUNTED, SEE **10 / A864.2**
11.39	PRINTER, OFCI
22.01	ACCESSIBLE PLUMBING FIXTURE, SEE PLUMBING
22.02	PLUMBING FIXTURE, SEE PLUMBING
22.17	PLUMBING EQUIPMENT, SEE PLUMBING
26.05	ELECTRICAL PANEL, SEE ELECTRICAL

TOILET ACCESSORY SCHEDULE

MARK	DESCRIPTION	MFR.	MODEL NO.	REMARKS
A	MIRROR (24" X 36")	BOBRICK	B-165	SURFACE MTD.
B	MIRROR (3'-0" X 5'-0")	BOBRICK	B-165	SURFACE MTD.
C	MIRROR (18" X 30")	BOBRICK	B-165	SURFACE MTD.
D	SOAP DISPENSER	BOBRICK	O.F.C.I.	SURFACE MTD.
E	TOILET TISSUE DISPENSER	BOBRICK	B-2888	SURFACE / PARTITION MTD.
F	TOILET SEAT COVER DISPENSER	BOBRICK	B-4221	SURFACE MTD.
G	GRAB BAR, REAR, SEE **19 / A800.2**	BOBRICK	B-6806 SERIES	42" LONG
H	GRAB BAR, SIDE, SEE **19 / A800.2**	BOBRICK	B-6806 SERIES	48" LONG
J	SANITARY NAPKIN DISPOSAL UNIT	BOBRICK	B-270	SURFACE MTD.
K	PAPER TOWEL DISPENSER	BOBRICK	B-262	SURFACE MTD.
L	DIAPER CHANGING STATION, SEE **17 / A800.2**	KOALA KARE	KB-300	SURFACE MTD.
M	COAT HOOK STRIP	BOBRICK	B-985	SURFACE MTD.

LEGEND

- PAINT COLOR 1 OVER GYPSUM BOARD, SEE FINISH SCHEDULE
- PAINT COLOR 2 OVER GYPSUM BOARD, SEE FINISH SCHEDULE
- PAINT COLOR 3 OVER GYPSUM BOARD, SEE FINISH SCHEDULE
- METAL PANEL 1 REPEAT SERIES OF 5 BOX RIB PANELS (BR2, BR2, BR4, BR2, BR3, SEE **1 / A820.2**), VERTICAL (SAME AS EXTERIOR ELEVATIONS
- METAL PANEL 2 FLUSH METAL PANEL, HORIZONTAL, (BROWN) (SAME AS EXTERIOR ELEVATIONS)
- METAL PANEL 3 FLUSH METAL PANEL, VERTICAL, (SILVER) (SAME AS EXTERIOR ELEVATIONS EXCEPT VERTICAL)
- FRP, WHITE. SEE **6 / A863.2**
- VINYL WALL COVERING, BRUSHED ALUMINUM SEE **2 / A863.2**
- ACOUSTIC WALL COVERING, GREY
- DRY ERASE WALL COVERING, SEE **5 / A863.2**
- FIRE RETARDANT TREATED PLYWOOD
- VINYL COVERED TACKBOARD, SEE **4 / A863.2**
- CERAMIC WALL TILE, SEE FINISH SCHEDULE

GENERAL NOTES

A. PROVIDE BLOCKING FOR ALL WALL MOUNTED ACCESSORIES AND EQUIPMENT, SEE **28 / A863.2**

B. FOR TYPICAL ACCESSIBLE TOILET ROOM FIXTURE AND ACCESSORY MOUNTING HEIGHTS AND CLEARANCES, SEE **2 / A800.2** & **3 / A800.2**

KEY PLAN

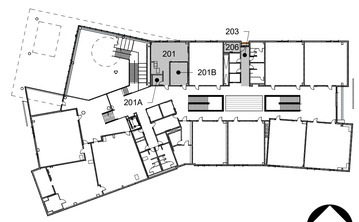

IDENTIFICATION STAMP
DIV. OF THE STATE ARCHITECT
APP: 02-122821 INC: 2
REVIEWED FOR
SS FLS ACS
DATE: 11/20/2025

Teter, Inc. expressly reserves its common law copyright and other property rights in these plans. This document, the ideas and designs incorporated herein, as an instrument of professional service, is not to be used in whole or in part, for any other project without prior written authorization.

MARK	DATE	DESCRIPTION
A	11/13/2025	DSA BACKCHECK

TETER, INC.
FRESNO HEADQUARTERS
VISALIA | BAKERSFIELD | MODESTO | SAN LUIS OBISPO
ARCHITECTS ENGINEERS CONNECTED

VISALIA CAMPUS UNIVERSITY CENTER
COLLEGE OF THE SEQUOIAS - INCREMENT 2
915 S. MOONEY BLVD
VISALIA, CALIFORNIA

DRAWING TITLE
INTERIOR ELEVATIONS - SECOND FLOOR

PROJECT NO.
22-12498

DRAWING
A921.2

PLOT DATE: 11/10/2025 9:19:00 AM

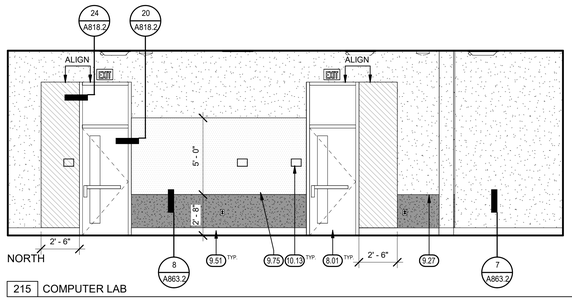

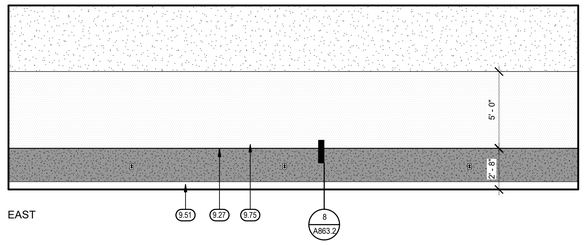

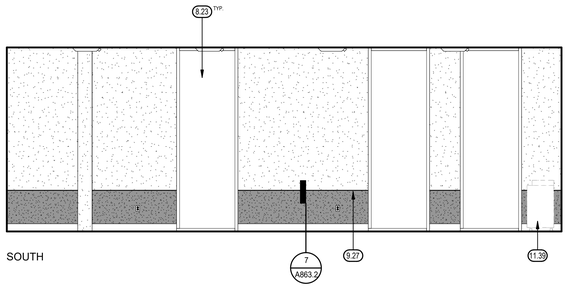

215 COMPUTER LAB

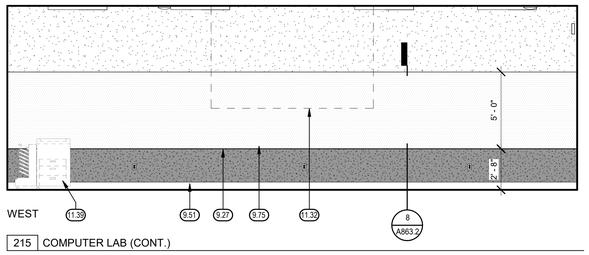

215 COMPUTER LAB (CONT.)

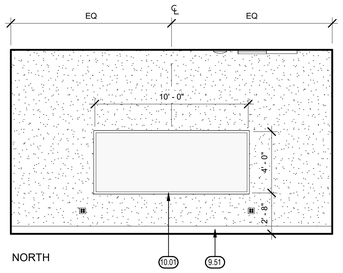

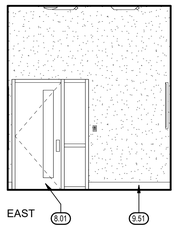

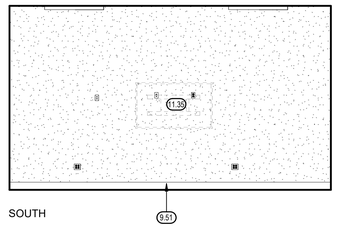

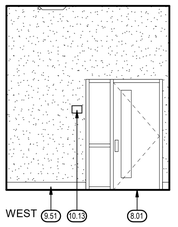

220 MEETING

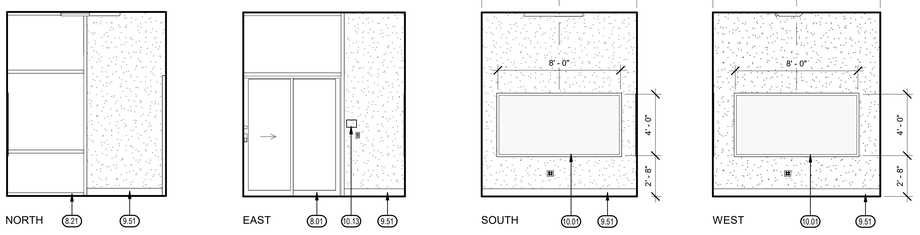

221 MEETING

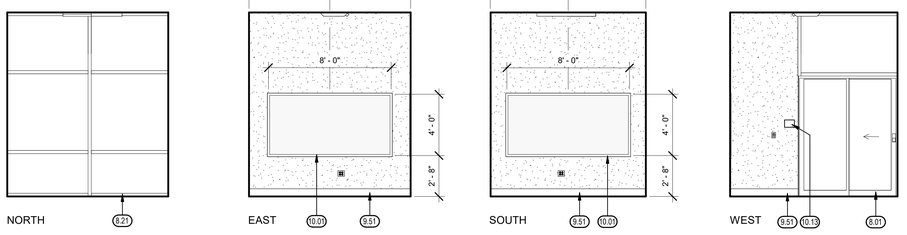

222 MEETING

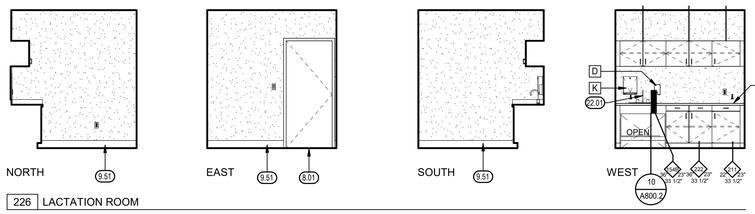

226 LACTATION ROOM

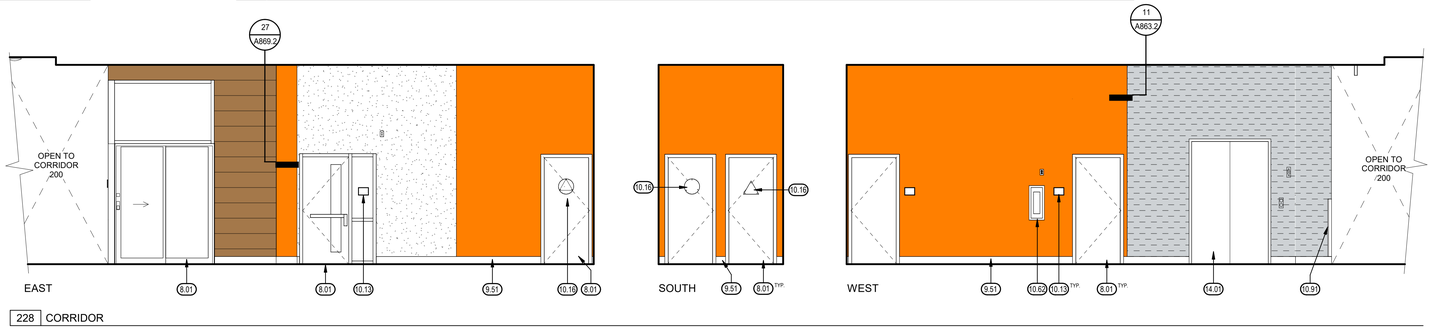

228 CORRIDOR

INTERIOR ELEVATIONS

1/4" = 1'-0" | 4

KEYNOTES (00.00)

6.26	PLASTIC LAMINATE COUNTER TOP, SEE INTERIOR ELEVATIONS
8.01	DOOR AND FRAME AS SCHEDULED
8.21	ALUMINUM STOREFRONT, SEE WINDOW SCHEDULE
8.23	ALUMINUM CURTAIN WALL, SEE WINDOW SCHEDULE
9.27	ALUMINUM REVEAL
9.51	TOPSET BASE AS SCHEDULED
9.75	DRY ERASE WALL COVERING
10.01	MARKER BOARD, SEE **20 / A863.2**
10.13	WALL SIGNAGE PER PLAN, TYP SEE **3 / A801.2**
10.16	TOILET ROOM DOOR GEOMETRIC SYMBOL, SEE **5 / A801.2**
10.62	FIRE EXTINGUISHER CABINET AND FIRE EXTINGUISHER
10.91	CORNER GUARD, SEE **10 / A863.2**
11.32	PROJECTION SCREEN, CEILING MOUNTED, RECESSED, SEE
11.35	MONITOR BRACKET OFCI, WALL MOUNTED, SEE **10 / A864.2**
11.39	PRINTER, OFCI
14.01	ELEVATOR
22.01	ACCESSIBLE PLUMBING FIXTURE, SEE PLUMBING

TOILET ACCESSORY SCHEDULE

MARK	DESCRIPTION	MFR.	MODEL NO.	REMARKS
A	MIRROR (24" X 36")	BOBRICK	B-165	SURFACE MTD.
B	MIRROR (3'-0" X 5'-0")	BOBRICK	B-165	SURFACE MTD.
C	MIRROR (18" X 30")	BOBRICK	B-165	SURFACE MTD.
D	SOAP DISPENSER	BOBRICK	O.F.C.I.	SURFACE MTD.
E	TOILET TISSUE DISPENSER	BOBRICK	B-2888	SURFACE / PARTITION MTD.
F	TOILET SEAT COVER DISPENSER	BOBRICK	B-4221	SURFACE MTD.
G	GRAB BAR, REAR, SEE **19 / A800.2**	BOBRICK	B-6806 SERIES	42" LONG
H	GRAB BAR, SIDE, SEE **19 / A800.2**	BOBRICK	B-6806 SERIES	48" LONG
J	SANITARY NAPKIN DISPOSAL UNIT	BOBRICK	B-270	SURFACE MTD.
K	PAPER TOWEL DISPENSER	BOBRICK	B-262	SURFACE MTD.
L	DIAPER CHANGING STATION, SEE **17 / A800.2**	KOALA KARE	KB-300	SURFACE MTD.
M	COAT HOOK STRIP	BOBRICK	B-985	SURFACE MTD.

LEGEND

- PAINT COLOR 1 OVER GYPSUM BOARD, SEE FINISH SCHEDULE
- PAINT COLOR 2 OVER GYPSUM BOARD, SEE FINISH SCHEDULE
- PAINT COLOR 3 OVER GYPSUM BOARD, SEE FINISH SCHEDULE
- METAL PANEL 1 REPEAT SERIES OF 5 BOX RIB PANELS (BR2, BR2, BR4, BR2, BR3, SEE **1 / A820.2**), VERTICAL (SAME AS EXTERIOR ELEVATIONS
- METAL PANEL 2 FLUSH METAL PANEL, HORIZONTAL, (BROWN) (SAME AS EXTERIOR ELEVATIONS)
- METAL PANEL 3 FLUSH METAL PANEL, VERTICAL, (SILVER) (SAME AS EXTERIOR ELEVATIONS EXCEPT VERTICAL)
- FRP, WHITE. SEE **6 / A863.2**
- VINYL WALL COVERING, BRUSHED ALUMINUM SEE **2 / A863.2**
- ACOUSTIC WALL COVERING, GREY
- DRY ERASE WALL COVERING, SEE **5 / A863.2**
- FIRE RETARDANT TREATED PLYWOOD
- VINYL COVERED TACKBOARD, SEE **4 / A863.2**
- CERAMIC WALL TILE, SEE FINISH SCHEDULE

GENERAL NOTES

A. PROVIDE BLOCKING FOR ALL WALL MOUNTED ACCESSORIES AND EQUIPMENT, SEE **28 / A863.2**

B. FOR TYPICAL ACCESSIBLE TOILET ROOM FIXTURE AND ACCESSORY MOUNTING HEIGHTS AND CLEARANCES, SEE **2 / A800.2** & **3 / A800.2**

KEY PLAN

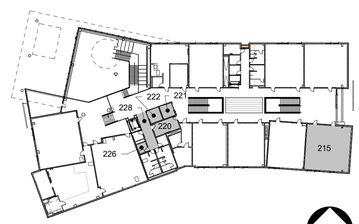

IDENTIFICATION STAMP
DIV. OF THE STATE ARCHITECT
APP: 02-122821 INC: 2
REVIEWED FOR
SS ☑ FLS ☑ ACS ☑
DATE: 11/20/2025

Teter, Inc. expressly reserves its common law copyright and other property rights in these plans. This document, the ideas and designs incorporated herein, as an instrument of professional service, is not to be used in whole or part, for any other project without prior written authorization.

MARK	DATE	DESCRIPTION
A.	11/13/2025	DSA BACKCHECK

LICENSED ARCHITECT ★ STATE OF CALIFORNIA ★ JONATHAN CHONG ★ C-32422 ★ EXPIRES 08-31-2027

TETER, INC.
ARCHITECTS ENGINEERS CONNECTED
FRESNO HEADQUARTERS
VISALIA | BAKERSFIELD | MODESTO | SAN LUIS OBISPO

VISALIA CAMPUS UNIVERSITY CENTER
COLLEGE OF THE SEQUOIAS - INCREMENT 2
915 S. MOONEY BLVD
VISALIA, CALIFORNIA

DRAWING TITLE
INTERIOR ELEVATIONS - SECOND FLOOR

PROJECT NO.
22-12498

DRAWING
A922.2

\\tet-file1\Users\tara.chong_TETR\Documents\12498-A-UC_tara.chong.rvt

PLOT DATE: 11/10/2025 9:19:57 AM

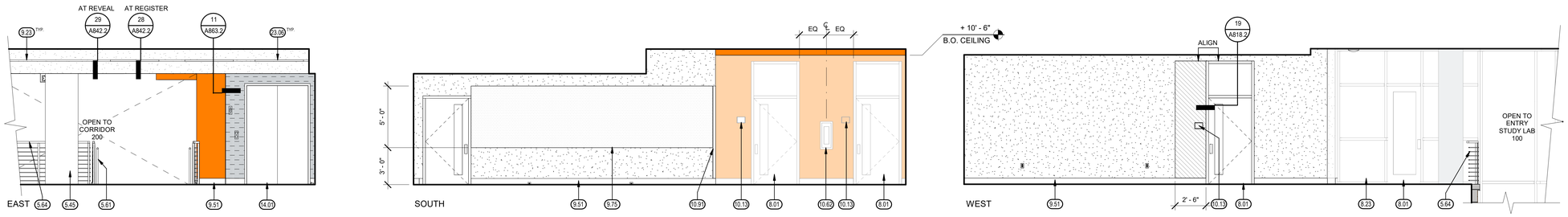

229 CORRIDOR

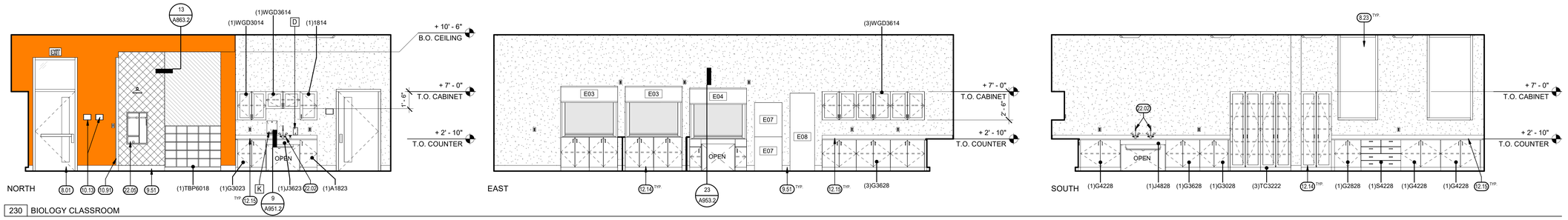

230 BIOLOGY CLASSROOM

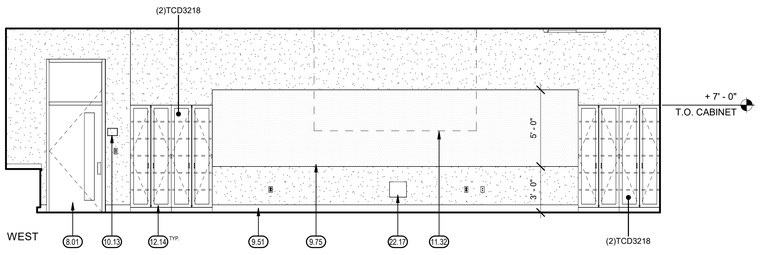

230 BIOLOGY CLASSROOM (CONT.)

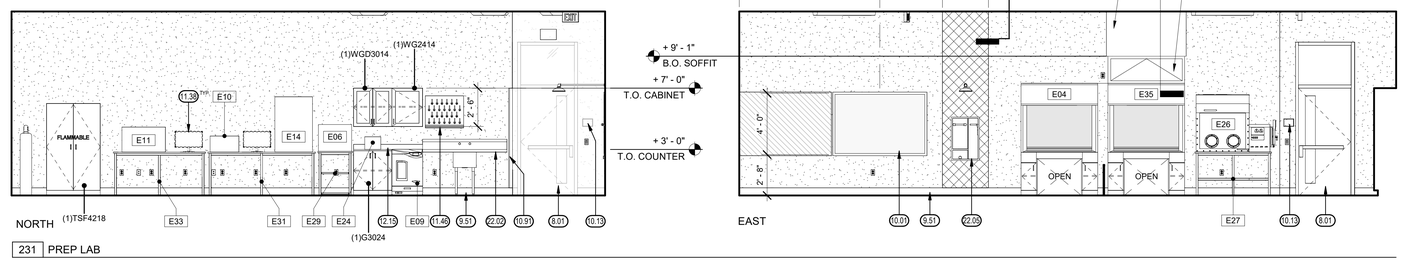

231 PREP LAB

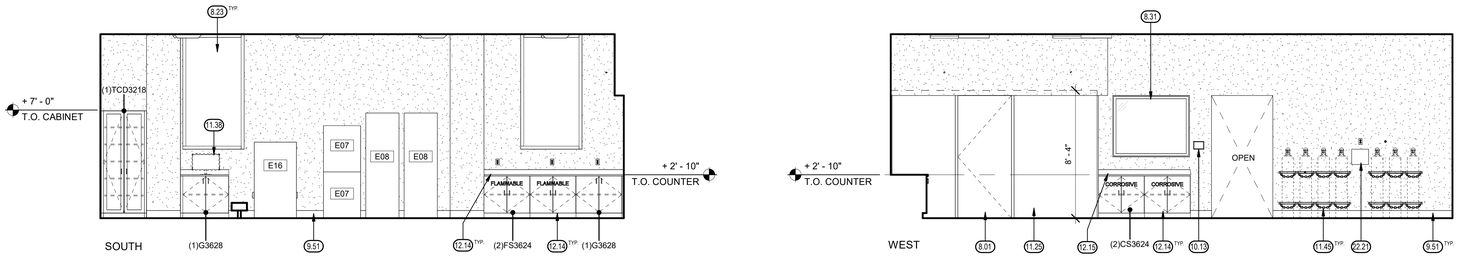

231 PREP LAB

INTERIOR ELEVATIONS

1/4" = 1'-0" | 4

KEYNOTES (30.00)

5.45 COLUMN ENCLOSURE, SEE **7 / A826.2**
5.61 HANDRAIL, TYP. SEE **2 / A852.2**
5.64 GUARDRAIL, TYP. SEE **24 / A850.2**
8.01 DOOR AND FRAME AS SCHEDULED
8.23 ALUMINUM CURTAIN WALL, SEE WINDOW SCHEDULE
8.31 WINDOW AS SCHEDULED
9.23 GYPSUM BOARD REVEAL, SEE **29 / A842.2**
9.51 TOPSET BASE AS SCHEDULED
9.75 DRY ERASE WALL COVERING
10.01 MARKER BOARD, SEE **20 / A863.2**
10.13 WALL SIGNAGE PER PLAN, TYP SEE **3 / A801.2**
10.62 FIRE EXTINGUISHER CABINET AND FIRE EXTINGUISHER
10.91 CORNER GUARD, SEE **10 / A863.2**
11.25 WALK-IN REFRIGERATOR PANELS, BY OTHERS
11.32 PROJECTION SCREEN, CEILING MOUNTED, RECESSED, SEE **28 / A841.2**
11.38 COMPUTER, OFCI
11.45 GAS CYLINDER STORAGE, PROVIDE RESTRAINT PER**14 / A954.2** SEE ENLARGED FLOOR PLAN FOR GAS TYPES
11.46 STAINLESS STEEL DRYING RACK, SEE **15 / A954.2**
12.14 LABORATORY CASEWORK, SEE A952.2
12.15 EPOXY RESIN COUNTER TOP
14.01 ELEVATOR
22.02 PLUMBING FIXTURE, SEE PLUMBING
22.05 EMERGENCY EYE WASH/SHOWER, SEE PLUMBING AND **5 / A951.2**
22.17 PLUMBING EQUIPMENT, SEE PLUMBING
22.21 GAS MANIFOLD, SEE PLUMBING
23.06 WALL REGISTER, SEE MECHANICAL

GENERAL NOTES

A. PROVIDE BLOCKING FOR ALL WALL MOUNTED ACCESSORIES AND EQUIPMENT, SEE **28 / A863.2**

B. FOR TYPICAL ACCESSIBLE TOILET ROOM FIXTURE AND ACCESSORY MOUNTING HEIGHTS AND CLEARANCES, SEE **2 / A800.2** & **3 / A800.2**

TOILET ACCESSORY SCHEDULE

MARK	DESCRIPTION	MFR.	MODEL NO.	REMARKS
A	MIRROR (24" X 36")	BOBRICK	B-165	SURFACE MTD.
B	MIRROR (3'-0" X 5'-0")	BOBRICK	B-165	SURFACE MTD.
C	MIRROR (18" X 30")	BOBRICK	B-165	SURFACE MTD.
D	SOAP DISPENSER	BOBRICK	O.F.C.I.	SURFACE MTD.
E	TOILET TISSUE DISPENSER	BOBRICK	B-2888	SURFACE / PARTITION MTD.
F	TOILET SEAT COVER DISPENSER	BOBRICK	B-4221	SURFACE MTD.
G	GRAB BAR, REAR, SEE **19 / A800.2**	BOBRICK	B-6806 SERIES	42" LONG
H	GRAB BAR, SIDE, SEE **19 / A800.2**	BOBRICK	B-6806 SERIES	48" LONG
J	SANITARY NAPKIN DISPOSAL UNIT	BOBRICK	B-270	SURFACE MTD.
K	PAPER TOWEL DISPENSER	BOBRICK	B-262	SURFACE MTD.
L	DIAPER CHANGING STATION, SEE **17 / A800.2**	KOALA KARE	KB-300	SURFACE MTD.
M	COAT HOOK STRIP	BOBRICK	B-985	SURFACE MTD.

LEGEND

- PAINT COLOR 1 OVER GYPSUM BOARD, SEE FINISH SCHEDULE
- PAINT COLOR 2 OVER GYPSUM BOARD, SEE FINISH SCHEDULE
- PAINT COLOR 3 OVER GYPSUM BOARD, SEE FINISH SCHEDULE
- METAL PANEL 1 REPEAT SERIES OF 5 BOX RIB PANELS (BR2, BR2, BR4, BR2, BR3, SEE **1 / A820.2**), VERTICAL (SAME AS EXTERIOR ELEVATIONS
- METAL PANEL 2 FLUSH METAL PANEL, HORIZONTAL, (BROWN) (SAME AS EXTERIOR ELEVATIONS)
- METAL PANEL 3 FLUSH METAL PANEL, VERTICAL, (SILVER) (SAME AS EXTERIOR ELEVATIONS EXCEPT VERTICAL)
- FRP, WHITE. SEE **6 / A863.2**
- VINYL WALL COVERING, BRUSHED ALUMINUM SEE **2 / A863.2**
- ACOUSTIC WALL COVERING, GREY
- DRY ERASE WALL COVERING, SEE **5 / A863.2**
- FIRE RETARDANT TREATED PLYWOOD
- VINYL COVERED TACKBOARD, SEE **4 / A863.2**
- CERAMIC WALL TILE, SEE FINISH SCHEDULE

KEY PLAN

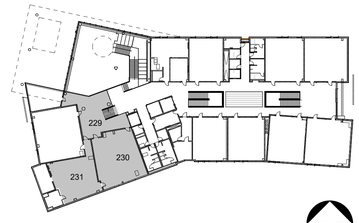

PLOT DATE: 11/10/2025 9:20:37 AM

\\tet-file1\Users\tara.chong_TETR\Documents\12498-A-UC_tara.chong.rvt

IDENTIFICATION STAMP
DIV. OF THE STATE ARCHITECT
APP: 02-122821 INC: 2
REVIEWED FOR
SS ☑ FLS ☑ ACS ☑
DATE: 11/20/2025

Teter, Inc. expressly reserves its common law copyright and other property rights in these plans. This document, the ideas and designs incorporated herein, as an instrument of professional service, is not to be used in whole or part, for any other project without prior written authorization.

MARK	DATE	DESCRIPTION
A.	11/13/2025	DSA BACKCHECK

LICENSED ARCHITECT ★ DAVID J. TETER ★ No. C-17903 ★ REGISTERED PROFESSIONAL ENGINEER ★ CIVIL ★ STATE OF CALIFORNIA

TETER, INC.
ARCHITECTS ENGINEERS CONNECTED
FRESNO HEADQUARTERS
VISALIA | BAKERSFIELD | MODESTO | SAN LUIS OBISPO

TETER

VISALIA CAMPUS UNIVERSITY CENTER
COLLEGE OF THE SEQUOIAS - INCREMENT 2
915 S. MOONEY BLVD
VISALIA, CALIFORNIA

DRAWING TITLE
INTERIOR ELEVATIONS - SECOND FLOOR

PROJECT NO.
22-12498

DRAWING
A923.2

\\tet-file1\Users\tara.chong_TETR\Documents\12498-A-UC_tara.chong.rvt

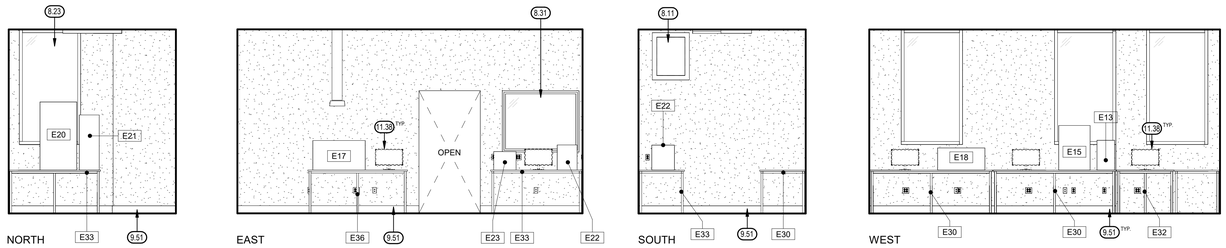

231B SUPPORT LAB

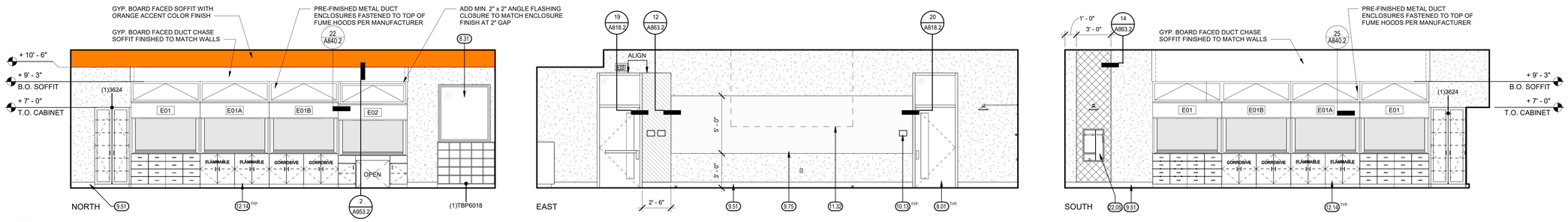

232 CHEMISTRY CLASSROOM

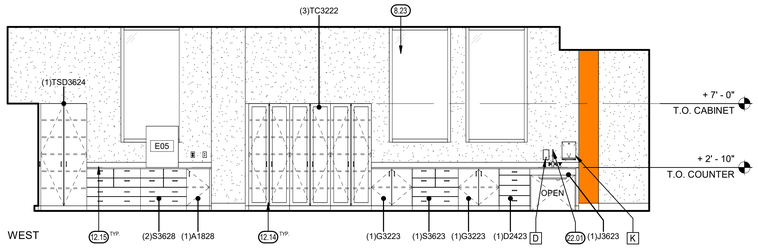

232 CHEMISTRY CLASSROOM (CONT.)

KEYNOTES (XX.XX)

8.01	DOOR AND FRAME AS SCHEDULED
8.11	20"W X 30"H WALL ACCESS DOOR AT MIN 3" ABOVE TOP OF COOLER BOX, SEE **3 / A840.2** (VERIFY LOCATION IN FIELD)
8.23	ALUMINUM CURTAIN WALL, SEE WINDOW SCHEDULE
8.31	WINDOW AS SCHEDULED
9.51	TOPSET BASE AS SCHEDULED
9.75	DRY ERASE WALL COVERING
10.13	WALL SIGNAGE PER PLAN, TYP SEE **3 / A801.2**
11.32	PROJECTION SCREEN, CEILING MOUNTED, RECESSED, SEE **15 / A847.2**
11.38	COMPUTER, OFCI
12.14	LABORATORY CASEWORK, SEE A952.2
12.15	EPOXY RESIN COUNTER TOP
22.01	ACCESSIBLE PLUMBING FIXTURE, SEE PLUMBING
22.05	EMERGENCY EYE WASH/SHOWER, SEE PLUMBING AND **5 / A951.2**

TOILET ACCESSORY SCHEDULE

MARK	DESCRIPTION	MFR.	MODEL NO.	REMARKS
A	MIRROR (24" X 36")	BOBRICK	B-165	SURFACE MTD.
B	MIRROR (3'-0" X 5'-0")	BOBRICK	B-165	SURFACE MTD.
C	MIRROR (18" X 30")	BOBRICK	B-165	SURFACE MTD.
D	SOAP DISPENSER	BOBRICK	O.F.C.I.	SURFACE MTD.
E	TOILET TISSUE DISPENSER	BOBRICK	B-2888	SURFACE / PARTITION MTD.
F	TOILET SEAT COVER DISPENSER	BOBRICK	B-4221	SURFACE MTD.
G	GRAB BAR, REAR, SEE **19 / A800.2**	BOBRICK	B-6806 SERIES	42" LONG
H	GRAB BAR, SIDE, SEE **19 / A800.2**	BOBRICK	B-6806 SERIES	48" LONG
J	SANITARY NAPKIN DISPOSAL UNIT	BOBRICK	B-270	SURFACE MTD.
K	PAPER TOWEL DISPENSER	BOBRICK	B-262	SURFACE MTD.
L	DIAPER CHANGING STATION, SEE **17 / A800.2**	KOALA KARE	KB-300	SURFACE MTD.
M	COAT HOOK STRIP	BOBRICK	B-985	SURFACE MTD.

LEGEND

- PAINT COLOR 1 OVER GYPSUM BOARD, SEE FINISH SCHEDULE
- PAINT COLOR 2 OVER GYPSUM BOARD, SEE FINISH SCHEDULE
- PAINT COLOR 3 OVER GYPSUM BOARD, SEE FINISH SCHEDULE
- METAL PANEL 1 REPEAT SERIES OF 5 BOX RIB PANELS (BR2, BR2, BR4, BR2, BR3, SEE **1 / A820.2**), VERTICAL (SAME AS EXTERIOR ELEVATIONS
- METAL PANEL 2 FLUSH METAL PANEL, HORIZONTAL, (BROWN) (SAME AS EXTERIOR ELEVATIONS)
- METAL PANEL 3 FLUSH METAL PANEL, VERTICAL, (SILVER) (SAME AS EXTERIOR ELEVATIONS EXCEPT VERTICAL)
- FRP, WHITE, SEE **6 / A863.2**
- VINYL WALL COVERING, BRUSHED ALUMINUM SEE **2 / A863.2**
- ACOUSTIC WALL COVERING, GREY
- DRY ERASE WALL COVERING, SEE **5 / A863.2**
- FIRE RETARDANT TREATED PLYWOOD
- VINYL COVERED TACKBOARD, SEE **4 / A863.2**
- CERAMIC WALL TILE, SEE FINISH SCHEDULE

GENERAL NOTES

A. PROVIDE BLOCKING FOR ALL WALL MOUNTED ACCESSORIES AND EQUIPMENT, SEE **28 / A863.2**

B. FOR TYPICAL ACCESSIBLE TOILET ROOM FIXTURE AND ACCESSORY MOUNTING HEIGHTS AND CLEARANCES, SEE **2 / A800.2** & **3 / A800.2**

KEY PLAN



INTERIOR ELEVATIONS

1/4" = 1'-0" | 4

IDENTIFICATION STAMP
DIV. OF THE STATE ARCHITECT
APP: 02-122821 INC: 2
REVIEWED FOR
SS ☑ FLS ☑ ACS ☑
DATE: 11/20/2025

Teter, Inc. expressly reserves its statutory law copyright and other property rights in these plans. This document, the ideas and designs incorporated herein, as an instrument of professional service, is not to be used in whole or part, for any other project without prior written authorization.

MARK	DATE	DESCRIPTION
A.	11/13/2025	DSA BACKCHECK

LICENSED ARCHITECT STATE OF CALIFORNIA

TETER, INC.
FRESNO HEADQUARTERS
VISALIA | BAKERSFIELD | MODESTO | SAN LUIS OBISPO
ARCHITECTS ENGINEERS CONNECTED

VISALIA CAMPUS UNIVERSITY CENTER
COLLEGE OF THE SEQUOIAS - INCREMENT 2
915 S. MOONEY BLVD
VISALIA, CALIFORNIA

DRAWING TITLE
INTERIOR ELEVATIONS - SECOND FLOOR

PROJECT NO.
22-12498

DRAWING
A924.2

PLOT DATE: 11/10/2025 9:21:07 AM

\\tet-file1\Users\tara.chong_TETR\Documents\12498-A-UC_tara.chong.rvt

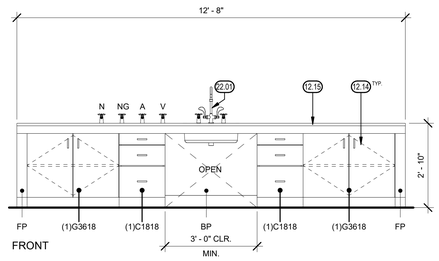

FRONT

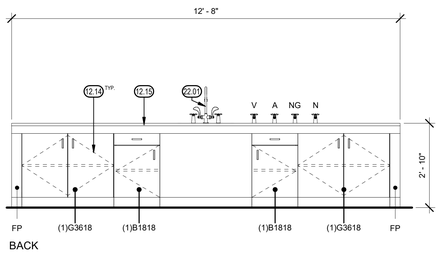

BACK

TYP. LAB INSTRUCTOR STATION

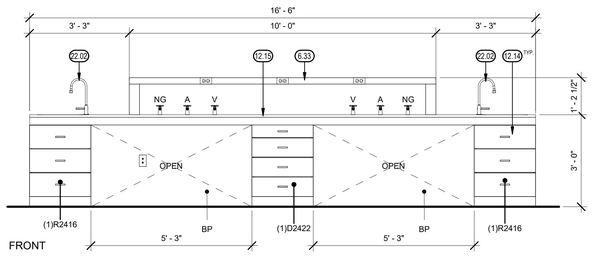

FRONT

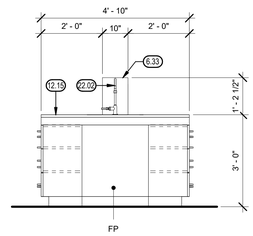

SIDE

TYP. STUDENT WORKSTATION

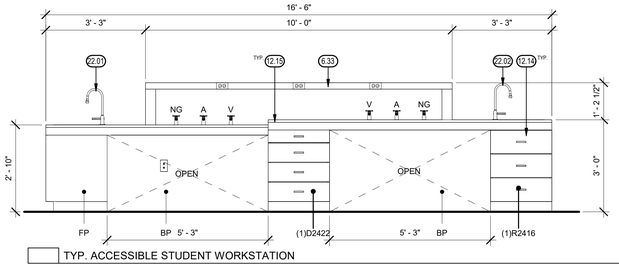

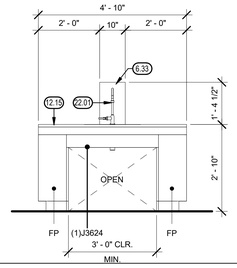

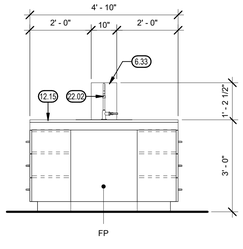

TYP. ACCESSIBLE STUDENT WORKSTATION

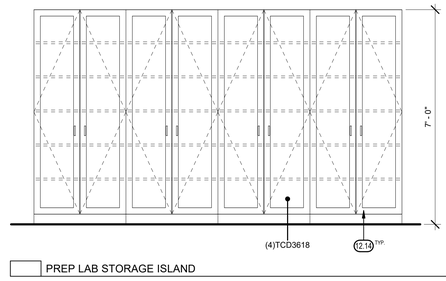

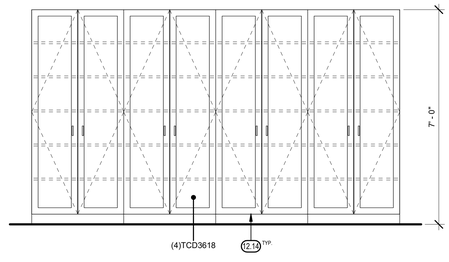

PREP LAB STORAGE ISLAND

PREP LAB WORKSTATION

PREP LAB ISLAND

LAB WORKSTATION ELEVATIONS

1/2" = 1'-0" | 4

KEYNOTES (00.00)

6.33	PLASTIC LAMINATE SHELF
11.38	COMPUTER, OFCI
11.39	PRINTER, OFCI
12.14	LABORATORY CASEWORK, SEE A952.2
12.15	EPOXY RESIN COUNTER TOP
22.01	ACCESSIBLE PLUMBING FIXTURE, SEE PLUMBING
22.02	PLUMBING FIXTURE, SEE PLUMBING

IDENTIFICATION STAMP
DIV. OF THE STATE ARCHITECT
APP: 02-122821 INC: 2
REVIEWED FOR
SS ☑ FLS ☑ ACS ☑
DATE: 11/20/2025

Teter, Inc. expressly reserves its common law copyright and other property rights in these plans. This document, the ideas and designs incorporated herein, as an instrument of professional service, is not to be used in whole or in part, for any other project without prior written authorization.

MARK	DATE	DESCRIPTION
A.	11/13/2025	DSA BACKCHECK

LICENSED ARCHITECT STATE OF CALIFORNIA

TETER, INC.
FRESNO HEADQUARTERS
VISALIA | BAKERSFIELD | MODESTO | SAN LUIS OBISPO
ARCHITECTS ENGINEERS CONNECTED

TETER

VISALIA CAMPUS UNIVERSITY CENTER
COLLEGE OF THE SEQUOIAS - INCREMENT 2
915 S. MOONEY BLVD
VISALIA, CALIFORNIA

DRAWING TITLE
LAB DETAILS WORKSTATION ELEVATIONS

PROJECT NO.
22-12498

DRAWING
A950.2

PLOT DATE: 11/10/2025 9:21:41 AM

\\tet-file1\Users\tara.chong_TETR\Documents\12498-A-UC_tara.chong.rvt
16" 1/4" 1/2" 1" 2" 4"

IDENTIFICATION STAMP
DIV. OF THE STATE ARCHITECT
APP: 02-122821 INC: 2
REVIEWED FOR
SS ☑ FLS ☑ ACS ☑
DATE: 11/20/2025

Teter, Inc. expressly reserves its common law copyright and other property rights in these plans. This document, the ideas and designs incorporated herein, as an instrument of professional service, is not to be used in whole or part, for any other project without prior written authorization.

MARK	DATE	DESCRIPTION
A	11/13/2025	DSA BACKCHECK

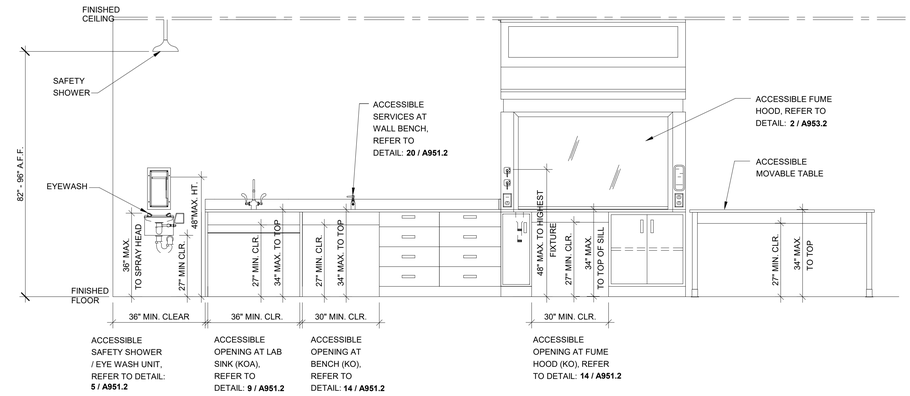

NOTE: THIS ELEVATION IS FOR REFERENCE ONLY. REFER TO FLOOR PLANS FOR ACTUAL CONFIGURATION.

ACCESSIBLE (ADA/CBC) CLEARANCES - ELEVATIONS

1/2" = 1'-0" | 2

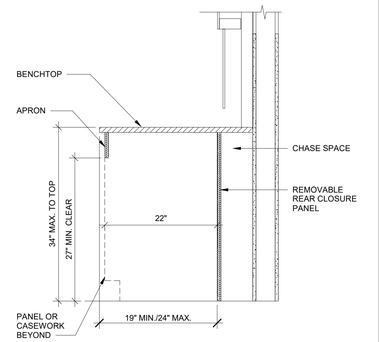

ACCESSIBLE OPENING AT BENCH/FUME HOOD (ADA/CBC)

1" = 1'-0" | 14

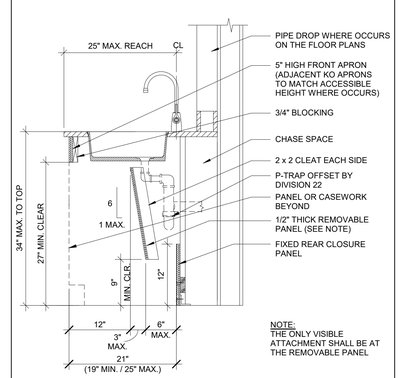

NOTE:
THE ONLY VISIBLE ATTACHMENT SHALL BE AT THE REMOVABLE PANEL

ACCESSIBLE OPENING AT LAB SINK

1" = 1'-0" | 9

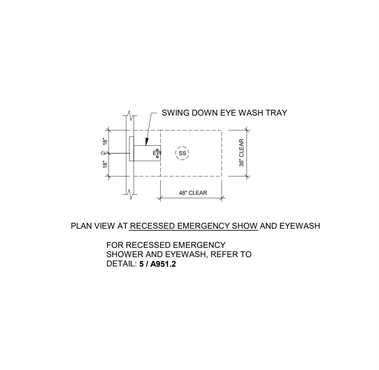

PLAN VIEW AT RECESSED EMERGENCY SHOW AND EYEWASH

FOR RECESSED EMERGENCY SHOWER AND EYEWASH, REFER TO DETAIL: 5 / A951.2

FLOOR CLEARANCES AT SS/EW

1/4" = 1'-0" | 4

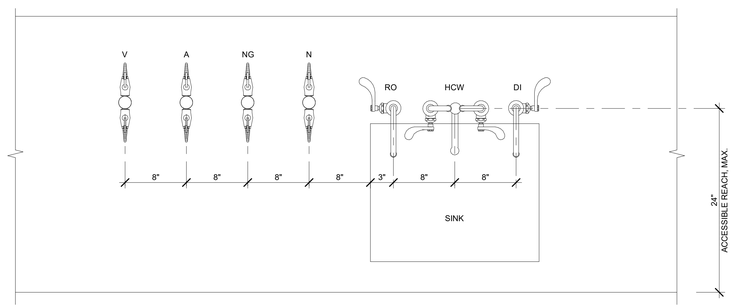

FIXTURE SPACING AT ACCESSIBLE INSTRUCTOR ISLAND (CHEMISTRY CLASSROOM 232, BIOLOGY CLASSROOM 230 AND SUPPORT LAB 231B)

LEGEND:

A	COMPRESSED AIR (SEE PLUMBING)
V	VACUUM (SEE PLUMBING)
N	NITROGEN (SEE PLUMBING)
NG	NATURAL GAS (SEE PLUMBING)
DI	DEIONIZED WATER (SEE PLUMBING)
HCW	HOT & COLD WATER (SEE PLUMBING)
RO	REVERSE OSMOSIS WATER (SEE PLUMBING)

NOTES:
1. ALL FIXTURES @ ACCESSIBLE STATIONS SHALL HAVE ADA COMPLIANT HANDLES.
2. TOP OF WORK SURFACE SHALL NOT EXCEED 33" ABOVE FINISHED FLOOR.
3. REFER TO FLOOR PLANS FOR ACTUAL SERVICES REQUIRED.
4. CONTRACTOR TO VERIFY CLERANCES FOR ALL SERVICE CUT-OUTS.

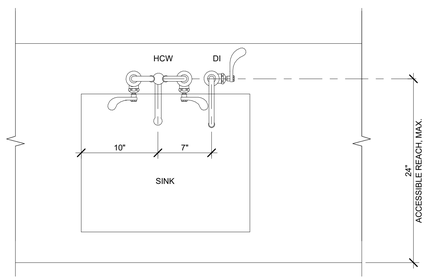

FIXTURE SPACING AT ACCESSIBLE COUNTER (CHEMISTRY CLASSROOM 232 & BIOLOGY CLASSROOM 230)

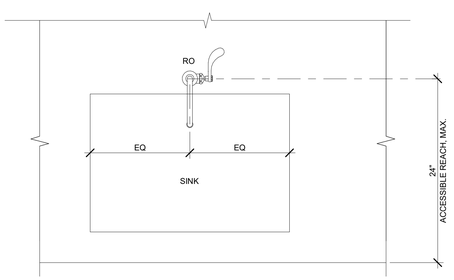

FIXTURE SPACING AT ACCESSIBLE STUDENT ISLAND (CHEMISTRY CLASSROOM 232 & BIOLOGY CLASSROOM 230)

FIXTURE SPACING

1 1/2" = 1'-0" | 20

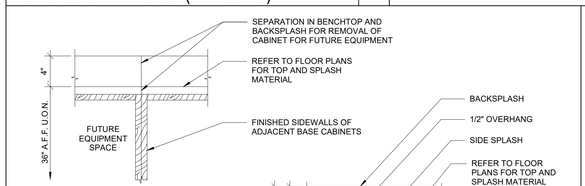

COUNTERTOP TRANSITION (@ BREAK)

COUNTERTOP TRANSITION AT WALL (34" TO 36")

COUNTERTOP TRANSITION (30" TO 36")

COUNTERTOP TRANSITION AT ISLAND (+33" TO 36")

COUNTERTOP TRANSITIONS

1 1/2" = 1'-0" | 10

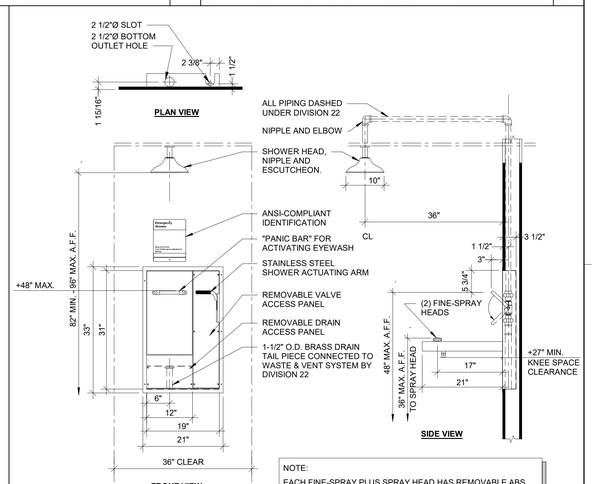

NOTE:

EACH FINE-SPRAY PLUS SPRAY HEAD HAS REMOVABLE ABS PLASTIC SPRAY COVER, RETICULATED POLYURETHANE FILTER, AND SELF-REGULATING FLOW CONTROL.

OPERABLE PARTS SHALL BE OPERABLE WITH ONE HAND AND SHALL NOT REQUIRE TIGHT GRASPING, PINCHING, OR TWISTING OF THE WRIST. THE FORCE REQUIRED TO ACTIVATE OPERABLE PARTS SHALL BE 5 POUNDS (22.2 N) MAXIMUM

EMERGENCY SHOWER & EYEWASH

3/4" = 1'-0" | 5

TETER, INC.
ARCHITECTS ENGINEERS CONSULTANTS
FRESNO HEADQUARTERS
VISALIA | BAKERSFIELD | MODESTO | SAN LUIS OBISPO

TETER

VISALIA CAMPUS UNIVERSITY CENTER
COLLEGE OF THE SEQUOIAS - INCREMENT 2
915 S. MOONEY BLVD
VISALIA, CALIFORNIA

DRAWING TITLE
LAB DETAILS

PROJECT NO.
22-12498

DRAWING
A951.2

PLOT DATE: 11/10/2025 9:21:50 AM

\\tet-file1\Users\tara.chong_TETR\Documents\12498-A-UC_tara.chong.rvt

D24 — BASE CABINET TYPE; WIDTH (INCHES - TYPICAL)

D24C/G — BASE CABINET TYPE; WIDTH; ON CASTERS OR GLIDES IN LIEU OF INTEGRAL TOE BASE

A24L OR R — BASE CABINET TYPE; WIDTH; LEFT OR RIGHT DOOR HINGE

A24S — BASE CABINET TYPE; WIDTH; SHALLOW DEPTH CABINET

KO24 — KNEE OPENING; WIDTH

KOX24 — KNEE OPENING; KNEE OPENING TYPE (A = ADA, E = EQUIP); WIDTH

WA36 — WALL CABINET; WALL CABINET DOOR TYPE; WIDTH

TC48 — TALL STORAGE CABINET; TALL CABINET DOOR TYPE; WIDTH

TAV48 — DESIGNATES VENTED CABINET WITH 2"DIA CONNECTION

FP — FILLER PANEL

BP — BACK PANEL

* — DESIGNATES KEY LOCKABLE CASEWORK

** — DESIGNATES PADLOCK HASP

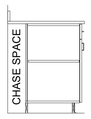

WALL BENCH-SECTION

NOTE:
ALL SHELVES TO BE ADJUSTABLE U.O.N.

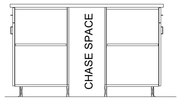

ISLAND BENCH-SECTION

STANDING HEIGHT BASE CABINETS (+36)



A (L or R) W.I. #101



B (L or R) W.I. #211



C LOCKABLE DRAWERS W.I. #230M



D W.I. #254

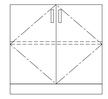

G W.I. #102

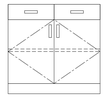

H W.I. #222

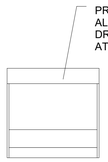

J SINK CABINET W.I. #155M



R W.I. #254



S W.I. #261

NOTE:
1. FOR TYPICAL ANCHORAGE, SEE **22 / A864.2**

BASE CABINETS (WOOD - U.O.N.)

CASEWORK LEGEND & NOTES

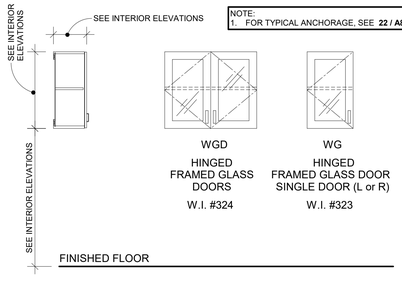

NOTE:
1. FOR TYPICAL ANCHORAGE, SEE **22 / A864.2**

WGD HINGED FRAMED GLASS DOORS W.I. #324

WG HINGED FRAMED GLASS DOOR SINGLE DOOR (L or R) W.I. #323

WALL CABINETS (WOOD - U.O.N.)

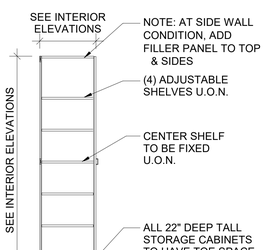

TALL STORAGE CABINETS (WOOD - U.O.N.)

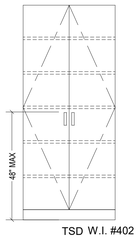

TSD W.I. #402 HINGED SOLID DOORS

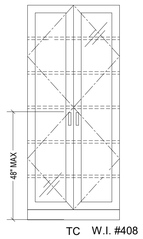

TC W.I. #408 HINGED FRAMED GLASS DOORS

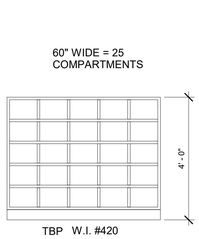

TBP W.I. #420 OPEN BACKPACK STORAGE CUBBIES

NOTE:
1. FOR TYPICAL ANCHORAGE, SEE **22 / A864.2**

KNEE OPENINGS (WOOD - U.O.N.)

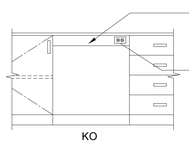

KO

KNEE OPENING
-4" APRON AT 36" HIGH TOPS
-4" APRON AT 34" HIGH TOPS
-2" APRON AT 30" HIGH TOPS
-REMOVABLE BACK PANEL SET BACK 22" DEEP

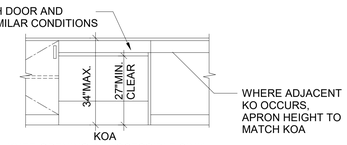

KOA

KNEE OPENING AT ACCESSIBLE SINK
-4" APRON
-REMOVABLE PANEL TO CONCEAL PIPING

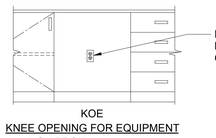

KOE

KNEE OPENING FOR EQUIPMENT
-NO APRON

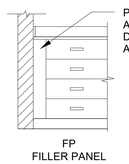

FP FILLER PANEL

NOTE:
1. FOR TYPICAL ANCHORAGE, SEE **22 / A864.2**
2. AT LOCATIONS WHERE KNEE OPENING WIDTHS ARE NOT GIVEN ON PLANS, FIELD VERIFY WALL TO WALL DIMENSIONS.

SPECIAL CABINETS (METAL - U.O.N.)

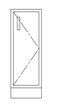

FH FUME HOOD CUPSINK CABINET



FHA FUME HOOD CUPSINK CABINET W/ APRON

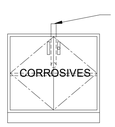

CS CORROSIVE STORAGE BASE CABINET

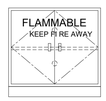

FS FLAMMABLE STORAGE BASE CABINET (NOT VENTED)

PLOT DATE: 11/10/2025 9:21:56 AM

IDENTIFICATION STAMP
DIV. OF THE STATE ARCHITECT
APP: 02-122821 INC: 2
REVIEWED FOR
SS ☑ FLS ☑ ACS ☑
DATE: 11/20/2025

Teter, Inc. expressly reserves its common law copyright and other property rights in these plans. This document, the ideas and designs incorporated herein, as an instrument of professional service, is not to be used in whole or part, for any other project without prior written authorization.

MARK	DATE	DESCRIPTION
A	11/13/2025	DSA BACKCHECK

LICENSED ARCHITECT — JOSEPH MARK CHONG — No. C-32672 — STATE OF CALIFORNIA

TETER, INC.
ARCHITECTS ENGINEERS CONNECTED
FRESNO HEADQUARTERS
VISALIA | BAKERSFIELD | MODESTO | SAN LUIS OBISPO

TETER

VISALIA CAMPUS UNIVERSITY CENTER
COLLEGE OF THE SEQUOIAS - INCREMENT 2
915 S. MOONEY BLVD
VISALIA, CALIFORNIA

DRAWING TITLE
LAB DETAILS

PROJECT NO.
22-12498

DRAWING
A952.2

\\tet-file1\Users\tara.chong_TETR\Documents\12498-A-UC_tara.chong.rvt

IDENTIFICATION STAMP
DIV. OF THE STATE ARCHITECT
APP: 02-122821 INC: 2
REVIEWED FOR
SS ☑ FLS ☑ ACS ☑
DATE: 11/20/2025

Teter, Inc. expressly reserves its common law copyright and other property rights in these plans. This document, the ideas and designs incorporated herein, as an instrument of professional service, is not to be used in whole or in part, for any other project without prior written authorization.

MARK	DATE	DESCRIPTION
A	11/13/2025	DSA BACKCHECK

NOTES:
- CABINET AND DOORS TO BE OF DOUBLE WALLED METAL CONSTRUCTION (U.O.N.).
- CABINET TO BE UL RATED - REFER TO SPECIFICATIONS FOR ADDITIONAL STANDARDS.
- DO NOT VENT CABINET. SEAL ALL VENTS WITH BUNGS AS PROVIDED BY MANUFACTURER.
- AT MOVABLE CABINETS PROVIDE LOCKABLE CASTERS AND SEISMIC ANCHOR - REFER TO SPECIFICATIONS.

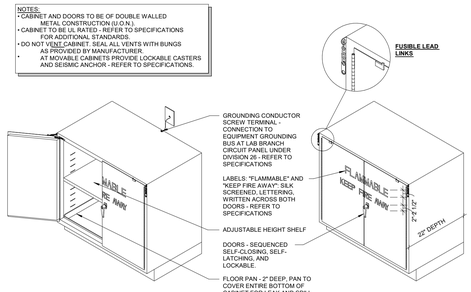

FLAMMABLE STORAGE CABINET — 3/4" = 1'-0" — 21

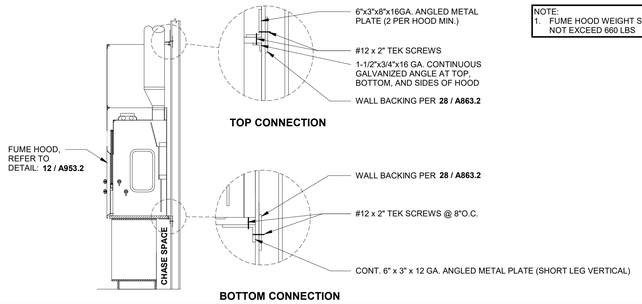

NOTE:
1. FUME HOOD WEIGHT SHALL NOT EXCEED 660 LBS

FUME HOOD ANCHORAGE — 1/2" = 1'-0" — 22

NOTES:
1. FOR FUME HOOD PRE-PIPING REFER TO DETAIL **9 / A953.2**
2. FOR FUME HOOD SAFETY LABEL REFER TO DETAIL **4 / A953.2**

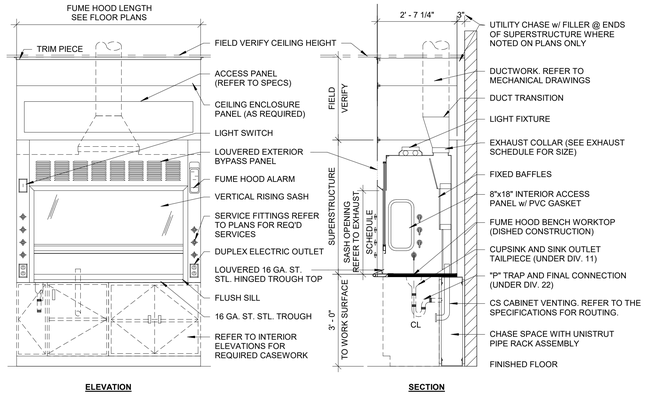

CHEMICAL FUME HOOD — 1/2" = 1'-0" — 12

NOTES:
1. FOR FUME HOOD PRE-PIPING REFER TO DETAIL **9 / A953.2**
2. FOR FUME HOOD SAFETY LABEL REFER TO DETAIL **4 / A953.2**

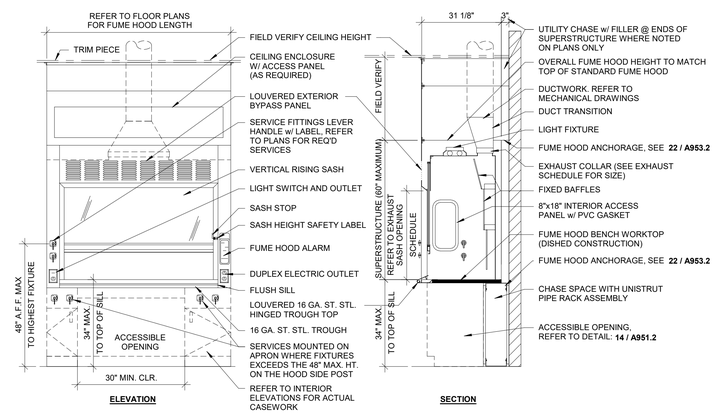

ACCESSIBLE CHEMICAL FUME HOOD — 1/2" = 1'-0" — 2

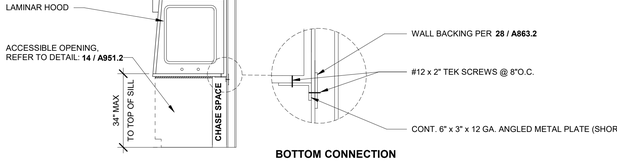

LAMINAR HOOD ANCHORAGE — 1/2" = 1'-0" — 23

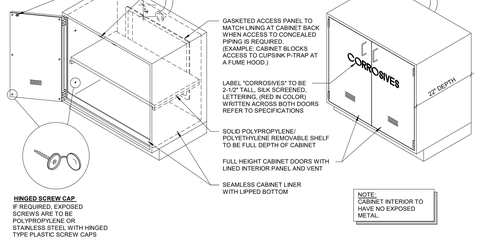

CORROSIVES STORAGE CABINET — 3/4" = 1'-0" — 14

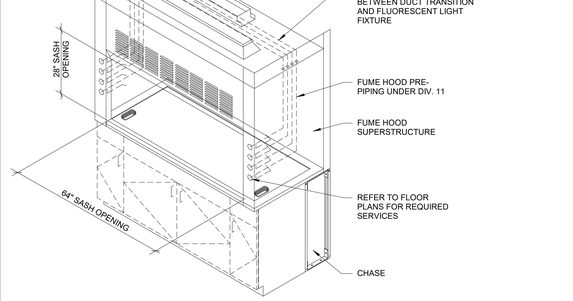

FUME HOOD PRE-PIPING — 1/2" = 1'-0" — 9

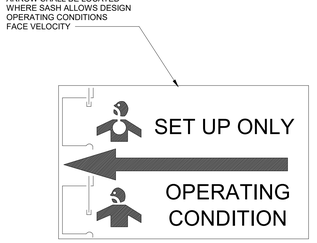

FUME HOOD SAFETY LABEL — 1/2" = 1'-0" — 4

NOTE:
ALL ANCHORS SHALL BE 3/8" HILTI KB-TZ2 (ESR-4266), 2 3/8" EMBED.

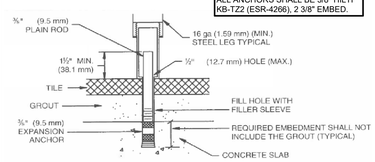

DETAIL 'A' (BULLET LEG) SHEAR

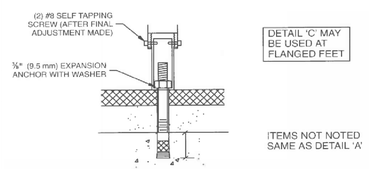

DETAIL 'B' (BULLET LEG) SHEAR AND UPLIFT

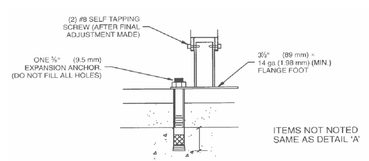

DETAIL 'C' (FLANGED FLOOR) SHEAR AND UPLIFT

EQUIP. FLOOR ANCHORAGE — 12" = 1'-0" — 25

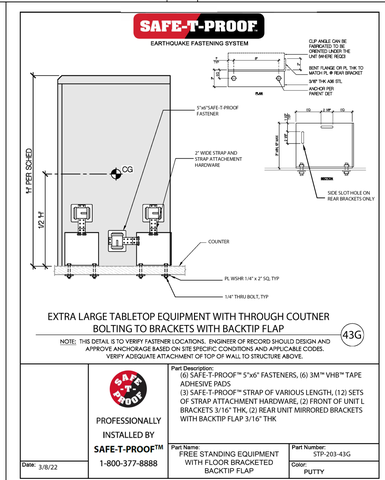

CT SCANNER ANCHORAGE — N.T.S. — 15

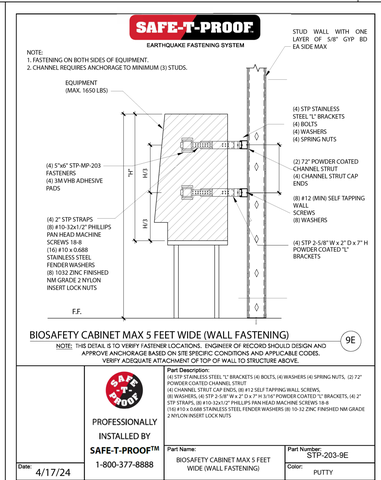

ANAEROBIC CHAMBER ANCHORAGE — 12" = 1'-0" — 10

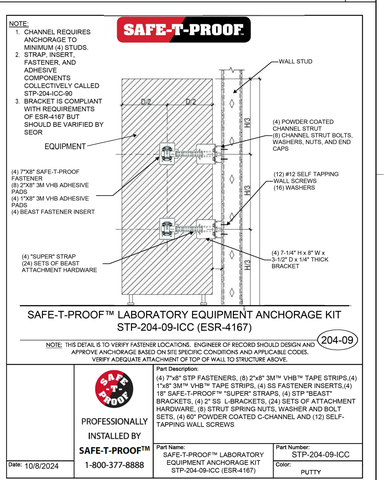

LAB EQUIPMENT ANCHORAGE — N.T.S. — 5

TETER, INC.
ARCHITECTS ENGINEERS CONSULTANTS
FRESNO HEADQUARTERS
VISALIA | BAKERSFIELD | MODESTO | SAN LUIS OBISPO

VISALIA CAMPUS UNIVERSITY CENTER
COLLEGE OF THE SEQUOIAS - INCREMENT 2
915 S. MOONEY BLVD
VISALIA, CALIFORNIA

DRAWING TITLE
LAB DETAILS

PROJECT NO.
22-12498

DRAWING
A953.2

PLOT DATE: 11/10/2025 9:22:09 AM

\\tet-file1\Users\tara.chong_TETR\Documents\12498-A-UC_tara.chong.rvt

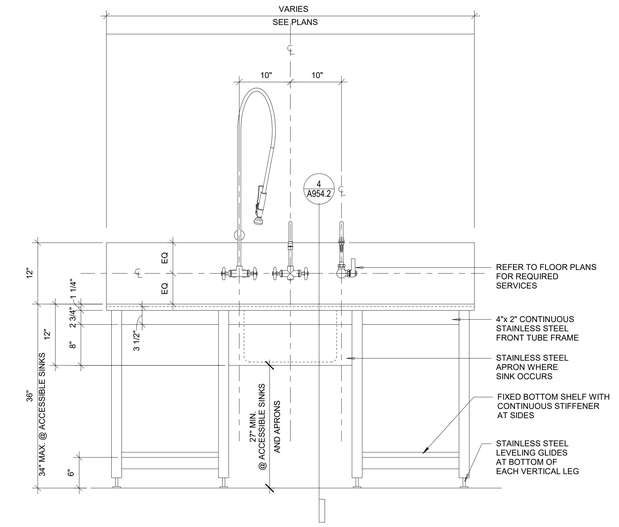

SCULLERY SINK ELEVATION — 1" = 1'-0" — 2

CYLINDER RESTRAINT — 3/4" = 1'-0" — 14

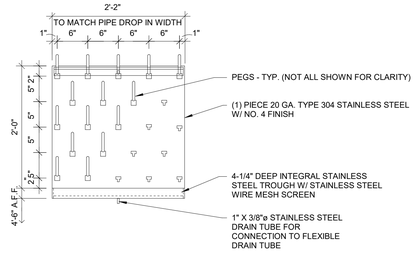

DRYING RACK ELEVATION

DRYING RACK STAINLESS STEEL — 1" = 1'-0" — 15

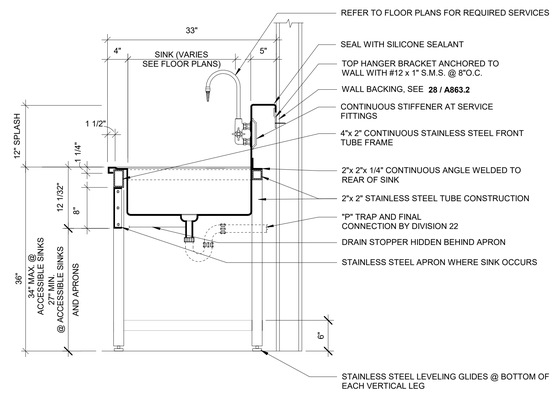

SCULLERY SINK SECTION — 1" = 1'-0" — 4

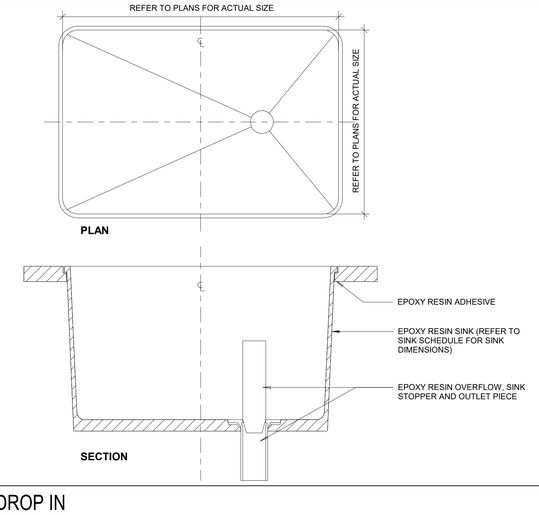

SINK EPOXY DROP IN — 1 1/2" = 1'-0" — 5

IDENTIFICATION STAMP
DIV. OF THE STATE ARCHITECT
APP: 02-122821 INC: 2
REVIEWED FOR
SS ☑ FLS ☑ ACS ☑
DATE: 11/20/2025

Teter, Inc. expressly reserves its common law copyright and other property rights in these plans. This document, the ideas and designs incorporated herein, as an instrument of professional service, is not to be used in whole or part, for any other project without prior written authorization.

MARK	DATE	DESCRIPTION
A	11/13/2025	DSA BACKCHECK

LICENSED ARCHITECT — CONSTRUCTION CONFORMED COPY — STATE OF CALIFORNIA

TETER, INC.
ARCHITECTS ENGINEERS CONNECTED
FRESNO HEADQUARTERS
VISALIA | BAKERSFIELD | MODESTO | SAN LUIS OBISPO

TETER

VISALIA CAMPUS UNIVERSITY CENTER
COLLEGE OF THE SEQUOIAS - INCREMENT 2
915 S. MOONEY BLVD
VISALIA, CALIFORNIA

DRAWING TITLE
LAB DETAILS

PROJECT NO.
22-12498

DRAWING
A954.2

PLOT DATE: 11/10/2025 9:22:16 AM

M:\#P_VP\Users\lus.valtierra\Documents\12498-S-UC_lus.valtierra.rvt
\\teh-file1\Users\lus.valtierra\Documents\12498-S-UC_lus.valtierra.rvt

GENERAL STRUCTURAL

1. ALL WORK SHALL BE PERFORMED IN ACCORDANCE WITH APPLICABLE SECTIONS OF THE CODE (SEE 'BASIS OF DESIGN'); AND ALL OTHER PUBLICATIONS AND STANDARDS LISTED HEREIN. WHERE REFERENCE IS MADE TO VARIOUS TEST STANDARDS FOR MATERIALS, SUCH STANDARDS SHALL BE THE LATEST EDITION AND/OR ADDENDUM.
2. CONTRACTOR SHALL READ AND FOLLOW ALL REFERENCED **ICC-ES** REPORTS OR **IAPMO-ES** REPORTS FOR INSTALLATION OF ITEMS SHOWN. ALTERNATE METHODS OF CONSTRUCTION MAY BE SUBMITTED FOR APPROVAL TO THE PROJECT COORDINATOR WITH APPLICABLE **ICC-ES** OR **IAPMO-ES** REPORTS.
3. THE CONTRACTOR SHALL BE RESPONSIBLE FOR COORDINATING THE WORK OF ALL TRADES AND SHALL VERIFY ALL DIMENSIONS, CONDITIONS, AND ELEVATIONS BEFORE STARTING WORK OR FABRICATION ON NEW (N) OR EXISTING (E) CONSTRUCTION. ANY DISCREPANCIES FOUND AMONG THE DRAWINGS, SPECIFICATIONS, GENERAL NOTES, AND THE SITE CONDITIONS SHALL BE IMMEDIATELY CALLED TO THE ATTENTION OF THE ENGINEER OF RECORD AND SHALL BE RESOLVED IN WRITING BEFORE PROCEEDING. ANY WORK PERFORMED BY THE CONTRACTOR AFTER DISCOVERY OF SUCH DISCREPANCY SHALL BE PERFORMED AT THE GENERAL CONTRACTORS'S RISK. ALL WORK SHALL BE PERFORMED IN A WORKMAN LIKE MANNER IN ACCORDANCE WITH ACCEPTED CONSTRUCTION PRACTICES.
4. PROJECTS WITH EXISTING STRUCTURES, ALL WORK SHALL BE PERFORMED SO AS TO MINIMIZE DAMAGE TO THE EXISTING STRUCTURE AND FINISHES.
5. ALL WORK SHALL CONFORM TO THE LATEST APPLICABLE CONSTRUCTION SAFETY REQUIREMENTS OF O.S.H.A. AND ANY OTHER GOVERNMENTAL AGENCY HAVING JURISDICTION IN THE AREA OF THE WORK.
6. THE CONTRACTOR SHALL USE ADEQUATE NUMBERS OF SKILLED WORKMAN WHO ARE THOROUGHLY TRAINED AND EXPERIENCED IN THE NECESSARY CRAFTS AND WHO ARE COMPLETELY FAMILIAR WITH THE SPECIFIED REQUIREMENTS AND METHODS NEEDED FOR PROPER PERFORMANCE OF THE WORK.
7. THE ENGINEER OF RECORD IS NOT RESPONSIBLE FOR, AND DOES NOT HAVE CONTROL OF, CONSTRUCTION MEANS, METHODS, TECHNIQUES, SEQUENCES, AND PROCEDURES FOR JOB SITE CONDITIONS, FOR SAFETY PRECAUTIONS AND PROGRAMS IN CONNECTION WITH THE CONSTRUCTION WORK. CONTRACTOR WILL BE REQUIRED TO ASSUME SOLE AND COMPLETE RESPONSIBILITY FOR JOB SITE CONDITIONS DURING THE COURSE OF CONSTRUCTION OF THE PROJECT, INCLUDING THE SAFETY OF ALL PERSONS AND PROPERTY. THIS REQUIREMENT SHALL BE MADE TO APPLY CONTINUOUSLY AND NOT BE LIMITED TO NORMAL WORKING HOURS. THE ENGINEER OF RECORD IS NOT RESPONSIBLE FOR THE CONTRACTOR'S FAILURE TO CARRY OUT THE CONSTRUCTION WORK IN ACCORDANCE WITH THE CONTRACT DOCUMENTS. THE ENGINEER OF RECORD IS NOT RESPONSIBLE FOR, AND DOES NOT HAVE CONTROL OR CHARGE OF ACTS OR OMISSIONS OF THE CONTRACTOR, SUBCONTRACTORS, OR ANY OF THEIR AGENTS OR EMPLOYEES, OR ANY OTHER PERSONS PERFORMING ANY OF THE CONSTRUCTION WORK. THE CONTRACTOR AGREES TO INDEMNIFY AND HOLD DESIGN PROFESSIONAL HARMLESS FROM ANY AND ALL LIABILITY, REAL OR ALLEGED, IN CONNECTION WITH THE PERFORMANCE OF WORK ON THIS PROJECT.
8. THE STRUCTURAL SYSTEMS HAVE BEEN DESIGNED TO RESIST CODE REQUIRED VERTICAL AND LATERAL FORCES AFTER THE CONSTRUCTION OF ALL STRUCTURAL ELEMENTS HAS BEEN COMPLETED. AS PRESCRIBED BY THE GOVERNING BUILDING CODES AND IN ACCORDANCE WITH STANDARD ENGINEERING PRACTICES, NO SPECIAL PROVISIONS HAVE BEEN MADE FOR CARRYING CONCENTRATED LOADS FROM STORAGE AND HANDLING OF CONSTRUCTION MATERIALS OR FROM OPERATION OF CONSTRUCTION EQUIPMENT. THE CONTRACTOR SHALL BE RESPONSIBLE TO PROVIDE ALL MEASURES NECESSARY TO PROTECT THE STRUCTURE'S STABILITY DURING CONSTRUCTION. SUCH MEASURES SHALL INCLUDE, BUT NOT BE LIMITED TO JOB SITE SAFETY; ERECTION MEANS, METHODS AND SEQUENCES; TEMPORARY SHORING; FORMWORK AND BRACING; USE OF EQUIPMENT, AND CONSTRUCTION PROCEDURES. PROVIDE ADEQUATE RESISTANCE TO LOADS ON THE STRUCTURES DURING CONSTRUCTION PER **DESIGN LOADS ON STRUCTURES DURING CONSTRUCTION (SEI/ASCE 37-14 (R2019))**.
9. STRUCTURAL OBSERVATION BY THE ENGINEER OF RECORD DOES NOT RELIEVE THE CONTRACTOR OF HIS OR HER RESPONSIBILITY FOR BUILDING THE PROJECT, CONTROLLING THE PROGRESS, PROVIDING SAFE WORKING CONDITIONS, AND CORRECTING ANY DEVIATIONS FROM PROJECT REQUIREMENTS. SUCH OBSERVATIONS ARE NOT TO BE CONSTRUED AS INSPECTION OF THE WORK. RESPONSIBILITY FOR RESOLUTION OF ANY ITEMS NOTED DURING OBSERVATION AS NOT BEING IN CONFORMANCE WITH THE CONTRACT DOCUMENTS RESTS WITH THE CONTRACTOR, SUBJECT TO REVIEW AND APPROVAL BY THE ENGINEER OF RECORD.
10. THE DETAILS ON THESE DRAWINGS SHALL APPLY IN ALL CASES UNLESS SPECIFICALLY SHOWN OTHERWISE. WHERE CONDITIONS ARE NOT SPECIFICALLY INDICATED, DETAILS OF A CHARACTER SIMILAR TO THOSE SHOWN SHALL BE USED, SUBJECT TO REVIEW BY THE ENGINEER OF RECORD.
11. THE TYPICAL DETAILS SHOWN ON THE TYPICAL DETAIL SHEETS SHALL APPLY IN ALL CASES UNLESS SPECIFICALLY SHOWN OTHERWISE. WHERE NO DETAIL IS SHOWN, CONSTRUCTION SHALL BE AS SHOWN FOR SIMILAR WORK.
12. NOTES AND DETAILS ON DRAWINGS SHALL TAKE PRECEDENCE OVER THESE GENERAL NOTES.
13. OPENINGS, POCKETS, ETC., SHALL NOT BE PLACED IN SLABS, PILASTERS, OR WALLS UNLESS DETAILED ON THE STRUCTURAL DRAWINGS. FOR OPENINGS NOT SHOWN AND/OR DETAILED ON THE STRUCTURAL DRAWINGS AND WHICH PENETRATE STRUCTURAL ELEMENTS, OBTAIN APPROVAL FROM THE ENGINEER OF RECORD BEFORE PROCEEDING WITH WORK.
14. FRAME OPENINGS AND SUPPORT MISCELLANEOUS EQUIPMENT AS DETAILED ON THE DRAWINGS. WHERE NO DETAILS ARE PROVIDED, OBTAIN APPROVAL FROM THE ENGINEER OF RECORD BEFORE PROCEEDING WITH WORK.
15. ALL EQUIPMENT, MACHINERY, TANKS AND SILOS SHALL BE PLUMB AND LEVEL UNLESS NOTED OTHERWISE.
16. ALL EXTERIOR GLAZING AND FRAMES SHALL BE DESIGNED TO RESIST THE WIND LOADS PRESENTED IN THE "BASIS OF DESIGN" SPECIFICATION.
17. LATERALLY BRACE ALL SUSPENDED EQUIPMENT AND CEILINGS IN CONFORMANCE WITH THE BUILDING CODE.
18. IT IS THE INTENT OF THESE PLANS TO PROVIDE DETAILS OF CONSTRUCTION NECESSARY TO GUIDE THE GENERAL CONTRACTOR WITH STRUCTURAL ASPECTS OF THE PROJECT ONLY. ARCHITECTURAL FEATURES SHALL BE COORDINATED WITH THE OWNER.
19. THE STRUCTURAL DRAWINGS SHALL BE USED IN CONJUNCTION WITH ARCHITECTURAL DRAWINGS. PRIMARY STRUCTURAL ELEMENTS ARE DIMENSIONED ON STRUCTURAL PLANS AND DETAILS AND OVERALL LAYOUT OF STRUCTURAL PORTION OF WORK. SOME SECONDARY ELEMENTS ARE NOT DIMENSIONED SUCH AS WALL CONFIGURATIONS, INCLUDING EXACT DOOR AND WINDOW LOCATIONS, ALCOVES, SLAB SLOPES AND DEPRESSIONS, CURBS, ETC. VERTICAL DIMENSIONAL CONTROL IS DEFINED BY ARCHITECTURAL WALL SECTIONS AND BUILDING SECTIONS. STRUCTURAL DETAILS SHOW DIMENSIONAL RELATIONSHIPS TO CONTROL DIMENSION DEFINED BY ARCHITECTURAL DRAWINGS. DETAILING AND SHOP DRAWING PRODUCTION FOR STRUCTURAL ELEMENTS WILL REQUIRE DIMENSIONAL INFORMATION CONTAINED IN BOTH ARCHITECTURAL AND STRUCTURAL DRAWINGS.
21. SEE ALSO PROJECT MANUAL.

BASIS OF DESIGN

1. CODE: **ASCE 7-16** AND **CBC 2022**
2. DESIGN LOADS:
   - ROOF DEAD LOAD---SEE PLANS
   - ROOF LIVE LOAD---SEE PLANS
   - (ROOF LIVE LOAD MAY BE REDUCED PER **CBC SECTION 1607A.14.2**
   - FLOOR DEAD LOAD---SEE PLANS
   - FLOOR LIVE LOAD---SEE PLANS
   - FLOOD HAZARD---N/A
   - EXTERIOR WALL---18 PSF
   - INTERIOR WALL---10 PSF
3. SEISMIC FACTORS:
   - RISK CATEGORY---III
   - IMPORTANCE FACTOR---1.25
   - Ss---0.553
   - S1---0.219
   - SITE CLASS---D
   - SDS---0.5
   - SD1---0.316*1.5=0.474
   - SEISMIC DESIGN CATEGORY---D
   - SEISMIC RESPONSE COEFFICIENT(S), Cs---0.077
   - RESPONSE MODIFICATION FACTOR(S), R---8
   - SEISMIC FORCE RESISTING SYSTEM(S)---STEEL SPECIAL MOMENT FRAME
   - DESIGN BASE SHEAR (EAST-WEST)---217.8 k
   - DESIGN BASE SHEAR (NORTH-SOUTH)---217.8 k
   - SYSTEM OVERSTRENGTH FACTOR, Ω---3.0
   - DEFLECTION AMP. FACTOR, Cd---5.5
   - REDUNDANCY FACTOR, ρ---1.3
   - ANALYSIS PROCEDURE USED---EQUIVALENT LATERAL FORCE METHOD
   - HORIZONTAL STRUCTURAL IRREGULARITITES---TYPE 2 & 5
   - VERTICAL STRUCTURAL IRREGULARITIES---N/A
   - LOCATION OF BASE---TOP OF FOOTING
   - 2ND FLR. DRIFT (EAST-WEST)---1.945"
   - 2ND FLR. DRIFT (NORTH-SOUTH)---1.681"
   - ROOF DRIFT (EAST-WEST)---2.301"
   - ROOF DRIFT (NORTH-SOUTH)---2.314"
4. WIND FACTORS:
   - RISK CATEGORY---III
   - ULTIMATE DESIGN WIND SPEED---101 MPH
   - WIND EXPOSURE---C
   - INTERNAL PRESSURE COEFFICIENT---+/- 0.18
5. THE SCOPE OF THIS PROJECT IS TO PROVIDE A NEW CLASSROOM BUILDING ON EXISTING CAMPUS. BUILDING IS CONSTRUCTED WITH METAL DECK ROOF DIAPHRAGM OVER STRUCTURAL STEEL ROOF FRAMING, COMPOSITE CONCRETE OVER METAL DECK FLOOR DIAPHRAGM OVER STRUCTURAL STEEL FLOOR FRAMING AND STRUCTURAL STEEL COLUMNS SUPPORTED ON CONCRETE CONTINUOUS AND SPREAD FOOTINGS. THE TYPICAL WALL FRAMING (EXTERIOR AND INTERIOR) IS METAL STUD FRAMING. AN INTERIOR MECHANICAL PLATFORM CONSISTS OF FIRE RETARDANT TREATED PLYWOOD DIAPHRAGM SUPPORTED BY METAL JOIST FRAMING AND SUREBOARD SHEARWALL AS THE LATERAL FORCE RESISTING SYSTEM. THE MAIN BUILDING LATERAL FORCE RESISTING SYSTEM CONSISTS OF METAL DECK DIAPHRAGMS AND STEEL SPECIAL MOMENT FRAMES WITH CONCRETE GRADE BEAMS.

BUILDING FOUNDATION AND PREPARATION

1. THE FOUNDATION DESIGN IS IN ACCORDANCE WITH THE RECOMMENDATIONS CONTAINED WITHIN THE GEOTECHNICAL ENGINEERING INVESTIGATION REPORT PREPARED BY **SOILS ENGINEERING, INC.** REPORT NO. **24-19596**, DATED **JUNE 19, 2024**.
2. THE SOIL PARAMETERS ARE AS FOLLOWS:
   A. SOIL CLASSIFICATION: LOOSE TO MEDIUM DENSE SILTY SAND.
      a. ALLOWABLE DESIGN PARAMETERS:

PARAMETER	ALLOWABLE CAPACITY
DEAD + LIVE (CONTINUOUS)	**3000** PSF
DEAD + LIVE (SPREAD)	**3000** PSF
SEISMIC / WIND	**1/3RD INCREASE**
ACTIVE PRESSURE (DRAINED)	**40** PCF
AT REST PRESSURE (DRAINED)	**55** PCF
PASSIVE PRESSURE (DRAINED)	**400** PCF
COEFFICIENT OF FRICTION	**0.43**

3. FOR OVEREXCAVATION AND COMPACTION INFORMATION, SEE 15/S002.2
4. CONTRACTOR SHALL REVIEW AND INCORPORATE ALL RECOMMENDATIONS OF SOILS ENGINEER OF RECORD IN THEIR GEOTECHNICAL ENGINEERING INVESTIGATION INDICATED IN NOTE #1 ABOVE.
5. A REPRESENTATIVE OF THE SOILS ENGINEER OF RECORD SHALL BE PRESENT DURING ALL SITE CLEARING AND GRADING OPERATIONS TO TEST AND OBSERVE EARTHWORK CONSTRUCTION.
6. PRIOR TO PLACEMENT OF REINFORCING STEEL, A REPRESENTATIVE OF THE SOILS ENGINEER OF RECORD SHALL INSPECT ALL FOOTING EXCAVATIONS FOR SUITABILITY OF BEARING SURFACES.
7. THE CONTRACTOR SHALL BE RESPONSIBLE FOR ALL EXCAVATION PROCEDURES AND FOR PROTECTION OF ADJACENT PROPERTY, STRUCTURES, STREETS, AND UTILITIES.
8. DO NOT BACKFILL AROUND THE EXTERIOR PERIMETER WALL UNTIL AFTER THE WALLS ARE SUPPORTED BY THE COMPLETION OF INTERIOR FLOOR SYSTEMS. DO NOT BACKFILL UNTIL 7 DAYS MINIMUM AFTER COMPLETION OF THE FLOOR SLABS.
9. IT SHALL BE THE CONTRACTOR'S RESPONSIBILITY TO DESIGN AND PROVIDE ADEQUATE SHORING, BRACING AND FORM WORK AS REQUIRED FOR THE CONSTRUCTION OF THE BUILDING. PROVIDE TEMPORARY BRACING AS REQUIRED TO HOLD THE VARIOUS ELEMENTS IN PLACE UNTIL FINAL SUPPORT IS SECURELY ANCHORED.
10. CONTRACTOR SHALL EXERCISE EXTREME CARE DURING EXCAVATION TO AVOID DAMAGE TO BURIED LINES, TANKS, AND OTHER CONCEALED ITEMS. UPON DISCOVERY, DO NOT PROCEED WITH WORK UNTIL RECEIVING WRITTEN INSTRUCTIONS FROM ARCHITECT.
11. PROVIDE DRAINAGE AND DEWATERING AROUND ALL WORK TO AVOID WATER-SOFTENED FOOTINGS.

CONCRETE MIX, PLACEMENT, AND FINISH

1. THE QUALITY AND DESIGN OF CONCRETE SHALL BE IN ACCORDANCE WITH THE CODE (SEE 'BASIS OF DESIGN') EXCEPT ITEMS NOT SPECIFICALLY COVERED THEREIN SHALL ALSO CONFORM TO **BUILDING CODE REQUIREMENTS FOR STRUCTURAL CONCRETE (ACI 318-19)**.
2. CEMENT SHALL BE **TYPE I/II (NON-CORROSIVE SOILS)** AND SHALL MEET THE REQUIREMENTS SET FORTH IN THE TABLE BELOW:

USE/LOCATION	f'c (psi)	SLUMP (in.)	w/c RATIO	MAX. AGG. SIZE
FOUNDATION	3,000	4	0.53	1 1/2" H.R.
FOUNDATION WALL	3,000	4	0.53	1 1/2" H.R.
SLAB-ON-GRADE	4,000	4	0.45 - 0.50	1" H.R.
CONC. o/ METAL DECK	4,000	4	0.45	1" H.R.

NOTES:
AGGREGATE SPECIFICATION SHALL BE AS FOLLOWS:
1. **ASTM C33** FOR HARD ROCK (H.R.) AGGREGATE (145pcf)
2. GAP-GRADED MIX IS NOT PERMITTED FOR SLAB ON GRADE. COMPLY WITH GUIDE FOR CONCRETE FLOOR AND SLAB CONSTRUCTION **(ACI 302.1R-15)**.

ULTIMATE COMPRESSIVE STRENGTH (f'c) SHOWN BASED ON 28 DAY STRENGTH.

3. THE CONTRACTOR SHALL DESIGN CONCRETE MIXES THAT MEET OR EXCEED THE REQUIREMENTS OF THE CONCRETE MIX TABLE. THE MIX DESIGNS SHALL FACILITATE ANTICIPATED PLACEMENT METHODS, WEATHER, REBAR CONGESTION, ARCHITECTURAL FINISHES, CONSTRUCTION SEQUENCING, STRUCTURAL DETAILS, AND ALL OTHER FACTOR REQUIRED TO PROVIDE A STRUCTURALLY SOUND, AESTHETICALLY ACCEPTABLE FINISHED PRODUCT. WATER REDUCING ADMIXTURES WILL LIKELY BE REQUIRED TO MEET THESE REQUIREMENTS. CONCRETE MIX DESIGNS SHALL CLEARLY INDICATE THE TARGET SLUMP, SLUMP TOLERANCE SHALL BE +/- 1 1/2 INCHES.
4. TOTAL CEMENTITIOUS MATERIAL SHALL BE THE SUM OF ALL CEMENT PLUS FLYASH. AT THE CONTRACTORS OPTION, FLYASH MAY BE SUBSTITUTED FOR CEMENT BUT SHALL NOT EXCEED 15% FOR DSA BY WEIGHT OF TOTAL CEMENTITIOUS MATERIAL. MIXES SHALL NOT CONTAIN LESS THAN 5 1/2 SACKS OF CEMENTITIOUS MATERIAL PER CUBIC YARD, UNLESS NOTED OTHERWISE.
5. FLYASH SHALL CONFORM TO **ASTM C618 CLASS F**. MAXIMUM LOSS OF IGNITION SHALL BE 1.0%
6. ADMIXTURES SHALL BE BY MASTER BUILDERS, W.R.GRACE, OR PRE-APPROVED EQUAL. ALL MANUFACTURERS RECOMMENDATIONS SHALL BE FOLLOWED. NO ADMIXTURES SHALL BE ADDED TO THE MIX DESIGN WITHOUT PRIOR APPROVAL OF THE STRUCTURAL ENGINEER.
7. PLACE CONCRETE FOLLOWING ALL APPLICABLE ACI RECOMMENDATIONS. CONCRETE SHALL BE PROPERLY CONSOLIDATED PER **GUIDE FOR CONSOLIDATION OF CONCRETE (ACI 309R-05)** USING INTERIOR MECHANICAL VIBRATORS, DO NOT OVER VIBRATE. CONCRETE SHALL BE POURED MONOLITHICALLY BETWEEN CONSTRUCTION OR EXPANSION JOINTS. IF CONCRETE IS PLACED BY THE PUMP METHOD, HORSES SHALL BE PROVIDED TO SUPPORT THE HOSE. THE HOSE SHALL NOT BE ALLOWED TO RIDE ON THE REINFORCING. WEATHER FORECASTS SHALL BE MONITORED AND ACI RECOMMENDATIONS FOR HOT AND COLD WEATHER CONCRETING SHALL BE FOLLOWED AS REQUIRED. CONCRETE SHALL NOT FREE FALL MORE THAN 5 FEET DURING PLACEMENT WITHOUT WRITTEN APPROVAL OF STRUCTURAL ENGINEER.
8. ALL MOLDS, ORNAMENTS, GROOVES, ETC., SHOWN ON DRAWINGS SHALL BE PROVIDED FOR IN THE FORM WORK BEFORE CONCRETE IS POURED.
9. REFER TO ARCHITECTURAL, MECHANICAL, AND/OR PLUMBING DRAWINGS FOR LOCATION AND SPACING OF ALL PLUMBING FIXTURES.
10. NO PIPES OR DUCTS SHALL BE PLACED IN CONCRETE FOOTINGS UNLESS SPECIFICALLY DETAILED.
11. CONSTRUCTION JOINTS NOT INDICATED ON THE DRAWINGS SHALL BE MADE AND LOCATED AS NOT TO IMPAIR THE STRENGTH OF THE STRUCTURE. PROVISION SHALL BE MADE FOR TRANSFER OF SHEAR AND OTHER FORCES THROUGH THE JOINTS.
12. CONTROL JOINTS (C.J.) SHALL BE LOCATED PER PLAN FOR PROPER SHRINKAGE CONTROL. JOINT SPACING SHALL BE ON A MAXIMUM 12' SPACING EACH WAY (144 SQ. FT.). WHERE POSSIBLE, CONTROL JOINTS ARE TO BE LOCATED AT INTERIOR NON-BEARING PARTITIONS AND AT HIGH OR LOW POINTS OF FLOOR SLOPES. SOFT CUTS FOR THE CONTROL JOINTS SHALL BE MADE IN THE SLAB NO LATER THAN 8 HOURS AFTER PLACEMENT.
13. ALL CONCRETE SHALL BE FINISHED PER THE PROJECT MANUAL.
14. ALL CONCRETE SHALL BE CURED PER THE PROJECT MANUAL.
15. NON-SHRINK GROUT SHALL BE MASTER BUILDERS "MASTERFLOW 555" OR PRE-APPROVED EQUAL. GROUT SHALL CONFORM TO CRD-C621 AND **ASTM C1107 GRADE B** WHEN TESTED AT A FLUID CONSISTENCY PER CRD-C611-85 FOR 30 MINUTES. GROUT MAY BE PLACED FROM A 25 SECOND FLOW TO A STIFF PACKING CONSISTENCY. FILL OR PACK ENTIRE SPACE UNDER PLATES OR SHAPES. FOLLOW MANUFACTURERS RECOMMENDATIONS FOR PREPARATION, INSTALLATION, AND CURING.
16. FOR FILL OVER METAL DECK: SHALL NOT BE SAW CUT UNLESS SPECIFICALLY CALLED OUT ON DRAWINGS

CONCRETE REINFORCING AND ANCHORAGE

1. CONCRETE SHALL BE AS SPECIFIED IN THE CONCRETE MIX, PLACEMENT AND FINISH SHEET SPECIFICATIONS.
2. ALL REINFORCING SHALL BE NEW STOCK DEFORMED BARS CONFORMING TO **ASTM A615** U.N.O. (**A706** WHERE WELDING IS REQUIRED, SEE NOTE #3):
   A. GRADE 60 OR DUAL GRADE ASTM A615/A760 GRADE 60, 80 KSI MINIMUM TENSILE STRENGTH, 1.1 MINIMUM RATIO OF ACTUAL TENSILE STRENGTH TO ACTUAL YIELD STRENGTH.
3. WELDING OF REINFORCING SHALL BE ALLOWED ONLY WHERE DETAILED ON DRAWINGS. ALL REINFORCING THAT IS TO BE WELDED SHALL BE **ASTM A706**, GRADE 60, CONFORMING TO **CBC 2022 SECTION 1705A.3.1** AND IN ACCORDANCE WITH AWS SPECIFICATIONS **(AWS D1.4/D1.4M-2018)**. FABRICATION DETAILS SHALL CONFORM TO **DETAILS AND DETAILING OF CONCRETE REINFORCEMENT (ACI 315-99)** AND **CRSI MANUAL OF STANDARD PRACTICE 2018 29TH EDITION (w/ 2019 ERRATA)**. WELDING SHALL NOT BE DONE WITHIN TWO BAR DIAMETERS OF ANY BENT PORTION OF A BAR WHICH HAS BEEN BENT COLD. WELDING OF CROSSING BARS SHALL NOT BE PERMITTED FOR ASSEMBLY OF REINFORCEMENT UNLESS AUTHORIZED BY THE STRUCTURAL ENGINEER.
4. ALL REBAR SHALL BE COLD BENT.
5. SPLICES IN REINFORCING STEEL SHALL BE LAPPED ACCORDING TO DETAIL 1/S002.2 U.N.O.
6. SEPARATE BARS 1 1/2 DIAMETERS OR 1" CLEAR, WHICHEVER IS GREATER. BARS INDICATED AS CONTINUOUS MAY BE FABRICATED IN CONVENIENT LENGTHS, STAGGER LAP SPLICE LOCATIONS A MINIMUM OF 24". FABRICATION DETAILS SHALL CONFORM TO **CRSI MANUAL OF STANDARD PRACTICE 2018 29TH EDITION**.
7. FIELD SPLICES NOT ORIGINALLY SHOWN ON DRAWINGS WILL BE PERMITTED ONLY WITH APPROVAL OF THE ENGINEER.
8. MINIMUM CONCRETE COVER FOR REINFORCING SHALL BE AS FOLLOWS:
   - CAST AGAINST EARTH (EXCEPT SLABS ON GRADE)---3"
   - SLABS ON GRADE---1 1/2"
   - EXPOSED TO EARTH OR WEATHER
     - #5 BARS AND SMALLER---1 1/2"
     - #6 BARS AND LARGER---2"
   - NOT EXPOSED TO WEATHER OR IN CONTACT WITH GROUND SLABS, WALLS, JOISTS
     - #11 BARS AND SMALLER---3/4"
     - #14 AND #18 BARS---1 1/2"
9. WELDED WIRE REINFORCEMENT SHALL CONFORM TO **ASTM A1064 GRADE 65**. LAP ONE FULL MESH +2" ON SIDES AND ENDS (8" MIN. TYPICAL FOR 6x6). WELDED WIRE REINFORCEMENT SHALL BE SUPPORTED TO WITHSTAND CONCRETE PLACEMENT. PULLING OF MESH INTO PLACE AFTER PLACEMENT IS NOT ALLOWED.
10. ALL ANCHOR RODS SHALL BE OF HEX HEAD TYPE CONFORMING TO **ASTM F1554** GRADE 55 (U.N.O.) CLASS 2A WITH SUPPLEMENTARY REQUIREMENT NO. 1 INCLUDING COLOR MARKING TYPICAL U.N.O. FOR EXPOSED ENDS. PROVIDE COLOR CODING PER **ASTM F1554** OR PERMANENT IDENTIFICATION MARKS PER **ASTM F1554** SUPPLEMENT #2 AND #3 ON EACH ROD FOR IDENTIFICATION. SEE 5/S010.2
11. ALL REINFORCING STEEL, ANCHOR RODS, ANCHOR BOLTS, DOWELS AND OTHER INSERTS SHALL BE IN PLACE AND SHALL BE WELL SECURED IN POSITION PRIOR TO POURING CONCRETE.
12. FOR SILL TRACK ANCHORS SEE COLD FORMED STEEL FRAMING NOTE #10

CONCRETE POST-INSTALLED ANCHOR NOTES

1. POST-INSTALLED ANCHORS SHALL BE THE FOLLOWING:
   A. EPOXIED THREADED ROD ASSEMBLIES SHALL BE:
      a. HILTI HIT-RE 500 V3 EPOXY **ICC REPORT NO. ESR-3814 (REISSUED: JANUARY 2025, REVISED MAY, 2025)** AS MANUFACTURED BY HILTI, INC., 7250 DALLAS PARKWAY; STE. 1000, PLANO, TEXAS 75024.
         - MINIMUM EMBEDMENT DEPTHS SHALL BE PER CONTRACT DRAWINGS, PLANS, AND DETAILS.
      b. THREADED ROD SHALL BE **ASTM A36** U.N.O.
   B. EXPOXIED REBAR ASSEMBLIES SHALL BE:
      a. HILTI HIT-RE 500 V3 EPOXY **ICC REPORT NO. ESR-3814 (REISSUED: JANUARY 2025, REVISED MAY, 2025)** AS MANUFACTURED BY HILTI, INC., 7250 DALLAS PARKWAY; STE. 1000, PLANO, TEXAS 75024.
         - MINIMUM EMBEDMENT DEPTHS SHALL BE PER CONTRACT DRAWINGS, PLANS, AND DETAILS.
      b. REBAR SHALL BE **ASTM A615** GRADE 60.
   C. EXPANSION BOLT ASSEMBLIES SHALL BE:
      a. HILTI KWIK BOLT-TZ2 ASSEMBLY **ICC REPORT NO. ESR-4266 (REISSUED: DECEMBER 2023, REVISED OCTOBER, 2024)**, AS MANUFACTURED BY HILTI, INC., 7250 DALLAS PARKWAY; STE. 1000, PLANO, TEXAS 75024.
   D. SCREW ASSEMBLIES SHALL BE:
      a. HILTI KWIK HUS-EZ **ICC REPORT NO. ESR-3027 (REISSUED: DECEMBER 2023)** AS MANUFACTURED BY HILTI, INC., 7250 DALLAS PARKWAY; STE. 1000, PLANO, TEXAS 75024.
   E. INSTALLATION SHALL BE IN ACCORDANCE WITH THE MANUFACTURER'S RECOMMENDATIONS. HOLE SHALL BE DRY AND CLEANED WITH WIRE BRUSH AND PRESSURIZED AIR PRIOR TO INSTALLATION. FOR EPOXY APPLICATIONS, USE EQUIPMENT WHICH WILL ACCURATELY MIX AND DISPENSE THE COMPONENTS. THE REBAR OR ROD SHOULD BE ROTATED AS IT IS PUSHED INTO THE HOLE.
2. ALL POST-INSTALLED ANCHORS SHALL BE INSPECTED BY AN APPROVED TESTING AND INSPECTION AGENCY AND TESTED IN ACCORDANCE WITH THE REQUIREMENTS OF THE ICC OR IAPMO REPORT AND **CBC SECTION 1910A.5** TO THE TEST VALUES STATED IN THE TABLE BELOW.
   A. THE LOAD MAY BE APPLIED BY ANY METHOD THAT WILL EFFECTIVELY MEASURE THE TENSION IN THE ANCHOR, SUCH AS DIRECT PULL TEST WITH A HYDAULIC JACK, CALIBRATED SPRING-LOADING DEVICE, A TORQUE WRENCH CALIBRATED FOR USE WITH THE SPECIFIC ANCHOR, ETC.
   B. TEST FREQUENCY
      a. SILL PLATE; 10 PERCENT
      b. ALL OTHER STRUCTURAL APPLICATIONS; 100 PERCENT
      c. NON-STRUCTURAL APPLICATIONS (EQUIPMENT ANCHORAGE, ETC.); 50 PERCENT OR ALTERNATIVE BOLTS IN A GROUP, INCLUDING AT LEAST ONE HALF THE ANCHORS IN EACH GROUP.
      d. SHEAR DOWELS ACROSS COLD JOINTS IN SLABS ON GRADE, WHERE THE SLAB IS NOT PART OF THE LATERAL FORCE RESISTING SYSTEM, SHALL NOT BE REQUIRED.
      e. *TF INDICATES A TEST FREQUENCY OF 10 PERCENT PER **1910A.5.3** EXCEPTION #2.
   C. TEST ACCEPTANCE
      a. HYDRAULIC RAM METHOD: ANCHORS TESTED WITH A HYDRAULIC JACK OR SPRING-LOADED DEVICES SHALL MAINTAIN THE TEST LOAD FOR A MINIMUM OF 15 SECONDS AND SHALL EXHIBIT NO DISCONCERNABLE MOVEMENT DURING THE TENSION TEST.
      b. FOR ADHESIVE ANCHORS, WHERE OTHER THAN THE BOND IS BEING TESTED, THE TESTING DEVICE SHALL NOT RESTRICT THE CONCRETE SHEAR CONE TYPE FAILURE MECHANISM FROM OCCURING.
      c. TORQUE WRENCH METHOD (MAY NOT BE USED WITH REBAR):
         - ANCHORS TESTED WITH A CALIBRATED TORQUE WRENCH MUST ATTAIN THE SPECIFIED TORQUE WITHIN 1/2 TURN OF THE NUT. (SCREWS MUST ATTAIN THE SPECIFIED TORQUE WITHIN 1/4 TURN OF THE SCREW AFTER THE INITIAL SEATING OF THE SCREW HEAD.
         - IF ANY ANCHOR FAILS TESTING, ALL ANCHORS OF THE SAME TYPE SHALL BE TESTED, WHICH ARE INSTALLED BY THE SAME TRADE NOT PREVIOUSLY TESTED UNTIL TWENTY CONSECUTIVE ANCHORS PASS, THEN RESUME THE INITIAL TEST FREQUENCY.

TEST LOADS

REBAR SIZE	ROD/SCREW DIA.	TENSION (LBS)	TORQUE (FT-LBS)		
			ROD	EXP. BOLT C.S. / S.S.	SCREW
- - -	1/4"	-	-	-	18
- - -	3/8"	-	-	30 / 30	19, 40*
#4	1/2"	-	-	50 / 40	45
#5	5/8"	-	-	40 / 60	85
#6	3/4"	-	-	110 / 125	95
#7	7/8"	-	-	-	-
#8	1"	-	-	185 / 185	-
- - -	1 1/4"	-	-	-	-

NOTE: FOR REBAR/ROD TENSION TEST LOADS SEE PLANS AND DETAILS.
* FOR 1 5/8" EMBED, USE 19; FOR 2 1/2" + EMBED, USE 40.

3. WHEN INSTALLING POST INSTALLED ANCHORS, USE CARE AND CAUTION TO AVOID CUTTING OR DAMAGING THE EXISTING REINFORCING BARS. MAINTAIN A MINIMUM CLEARANCE OF ONE INCH BETWEEN THE EXISTING REINFORCEMENT AND THE POST-INSTALLED ANCHOR.
4. ANY POST-INSTALLED ANCHOR SHOWN ON THE APPROVED CONTRACT DRAWINGS SHALL BE INSTALLED WITH SPECIAL INSPECTION IN ACCORDANCE WITH THE ICC OR IAPMO REPORT. ANY ITEMS THAT REQUIRE POST-INSTALLED ANCHORS BUT ARE NOT SPECIFICALLY SHOWN ON THE APPROVED CONTRACT DRAWINGS MUST BE IN ACCORDANCE WITH THE ICC OR IAPMO REPORT PRIOR TO BEING INSTALLED.

IDENTIFICATION STAMP
DIV. OF THE STATE ARCHITECT
APP: 02-122821 INC: 2
REVIEWED FOR
SS ☑ FLS ☑ ACS ☑
DATE: 11/20/2025

Teter, Inc. expressly reserves its common law copyright and other property rights in these plans. This document, the ideas and designs incorporated herein, as an instrument of professional service, is not to be used in whole or in part, for any other project without prior written authorization.

MARK	DATE	DESCRIPTION
A	11/13/2025	DSA BACKCHECK

REGISTERED PROFESSIONAL ENGINEER LUS S. VALTIERRA No. 55659 STRUCTURAL STATE OF CALIFORNIA

TETER, INC.
FRESNO HEADQUARTERS
VISALIA | BAKERSFIELD | MODESTO | SAN LUIS OBISPO
ARCHITECTS ENGINEERS

\\teter-file1\Users\lus.valiterra\Documents\12498-S-UC_lus.valiterra.rvt

STRUCTURAL STEEL

1. ALL STRUCTURAL STEEL SHALL BE FABRICATED AND ERECTED PER **AISC SPECIFICATIONS** FOR BUILDINGS AND SHALL CONFORM TO THE FOLLOWING, U.N.O.:
   - W SHAPES: **ASTM A992**
   - HSS SHAPES: **ASTM A500, GRADE C**
   - PIPE SHAPES: **ASTM A53, GRADE B**
   - ALL OTHER SHAPES: **ASTM A36**
   - PLATES AND BARS: **ASTM A36, ASTM A572 GR 50 WHERE NOTED**
   - STAINLESS STEEL PLATE: **ASTM A240, TYPE 316L Fy=30 KSI MIN. (AUSTENITIC)**
   - STAINLESS STEEL TUBING: **ASTM A554, TYPE 316L, Fy=30 KSI MIN. (AUSTENITIC)**

   A. ALL OPEN PIPE AND TUBE SHAPE SHALL HAVE A MIN. 1/4" CAP PLATE WITH FULL PENETRATION WELD ALL AROUND, U.N.O.

2. WIDE FLANGE MEMBERS THAT HAVE FLANGE THICKNESS EXCEEDING 2 INCHES SHALL CONFORM TO **ASTM A6 SUPPLEMENTARY REQUIREMENT S30**, CHARPY V-NOTCH IMPACT TEST FOR STRUCTURAL SHAPES - ALTERNATE CORE LOCATION. TEST SHALL MEET A MINIMUM AVERAGE VALUE OF 20 FT LB AT +70 DEG F. WIDE FLANGE MEMBERS THAT ARE PART OF THE LATERAL FORCE RESISTING SYSTEM THAT HAVE FLANGE THICKNESS EXCEEDING 1 1/2 INCHES SHALL ALSO CONFORM.

3. PLATES THAT HAVE 2 INCH THICKNESS AND THICKER SHALL CONFORM TO **ASTM A6 SUPPLEMENTARY REQUIREMENT S5** CHARPY V-NOTCH IMPACT TEST. TEST SHALL MEET A MINIMUM AVERAGE VALUE OF 20 FT LB AT +70 DEG F.

4. FOR ANCHOR ROD REQUIREMENTS SEE CONCRETE SPECIFICATIONS.

5. WELDED THREADED STUDS, HEADED STUDS AND DEFORMED BAR ANCHORS

   A. ALL WELDED THREADED STUDS SHALL BE "CFL FULLY THREADED STUDS" MANUFACTURED BY NELSON STUD WELDING, INC. STUDS SHALL BE INSTALLED PER MANUFACTURERS RECOMMENDATIONS USING A NELSON WELD GUN, UNLESS NOTED OTHERWISE ON DETAILS. ALL WELDS SHALL BE MADE AND INSPECTED IN ACCORDANCE WITH **AWS D1.1/D1.1M:2015**.

   B. ALL WELDED HEADED STUDS SHALL BE "SSL SHEAR CONNECTORS" MANUFACTURED BY NELSON STUD WELDING, INC. ALL NELSON STUD ANCHORS SHALL BE 3/4" CONFORMING TO **ASTM A108** WITH FABRICATION AND INSTALLATION IN CONFORMANCE WITH **ICC ESR-2856 (REISSUED: NOVEMBER 2022)** USING A NELSON WELD GUN, UNLESS NOTED OTHERWISE ON DETAILS. ALL WELDS SHALL BE MADE AND INSPECTED IN ACCORDANCE WITH **AWS D1.1/D1.1M:2015**.

   C. ALL DEFORMED BAR ANCHORS SHALL BE "D2L DEFORMED BAR ANCHORS" MANUFACTURED BY NELSON STUD WELDING, INC. CONFORMING TO **ICC ESR-2907 (REISSUED: DECEMBER 2022)**. ALL DEFORMED BAR ANCHORS SHALL BE INSTALLED PER MANUFACTURERS RECOMMENDATIONS USING A NELSON WELD GUN, UNLESS NOTED OTHERWISE ON DETAILS. ALL WELDS SHALL BE MADE AND INSPECTED IN ACCORDANCE WITH **AWS D1.1/D1.1M:2015**.

6. ALL UNFINISHED NUTS AND BOLTS "MACHINE BOLTS" (M.B.) SHALL BE **ASTM A307** U.N.O.

7. WHERE BOLTS ARE INDICATED, ASSEMBLY SHALL COMPLY WITH THE SPECIFICATIONS FOR STRUCTURAL JOINTS AS ENDORSED BY THE AMERICAN INSTITUTE OF STEEL CONSTRUCTION (AISC) AS FOLLOWS:

   A. ALL BOLTS SHALL CONFORM TO **ASTM F1852.**

   B. **ASTM A325-N**: ASSEMBLY SHALL COMPLY WITH REQUIREMENTS FOR SNUG-TIGHT "BEARING" TYPE CONNECTIONS WITH THREADS INCLUDED IN THE SHEAR PLANE.

   C. **ASTM A490-SC** : ASSEMBLY SHALL COMPLY WITH REQUIREMENTS FOR SLIP CRITICAL (FRICTION) TYPE CONNECTIONS. INSTALLATION SHALL FOLLOW EITHER "CALIBRATED WRENCH METHOD" OR "DIRECT TENSION INDICATOR". "TURN OF NUT", OR "TWIST-OFF TYPE TENSION-CONTROL", FAYING SURFACE CONDITIONS MUST MEET AISC SPECIFICATIONS.

   D. **GRADE F1852** BOLTS (TWIST-OFF) MAY BE USED FOR **GRADE 325** BOLTS.

   E. **GRADE F2280** BOLTS (TWIST-OFF) MAY BE USED FOR **GRADE 490** BOLTS. **GRADE F2280** SHALL BE USED WHERE "TWIST-OFF" TYPE TENSION-CONTROL PRETENSIONING IS USED.

8. HOLES, COPES OR OTHER CUTS OR MODIFICATIONS OF THE STRUCTURAL STEEL MEMBERS SHALL NOT BE MADE IN THE FIELD WITHOUT WRITTEN APPROVAL FROM THE STRUCTURAL ENGINEER OF RECORD.

9. ALL BOLT HOLES IN STEEL SHALL BE PUNCHED OR DRILLED. NO TORCHING OF HOLES ALLOWED. HOLES SHALL BE 1/16" LARGER THAN THE NOMINAL BOLT DIAMETER, U.N.O.

10. WELDING:

    A. ALL WELDING SHALL BE DONE BY CERTIFIED WELDERS USING THE SHIELDED ARC PROCESS AND IN ACCORDANCE WITH AWS STANDARDS. JOINT DETAILS SHALL COMPLY WITH AWS REQUIREMENTS FOR JOINTS ACCEPTED WITHOUT QUALIFICATION TESTS.

    B. ALL WELDS SHALL BE UNIFORM IN SIZE AND APPEARANCE, AND FREE OF PINHOLES, POROSITY, UNDERCUTTING OR OTHER DEFECTS. ALL BUTT WELDS SHALL BE FULL PENETRATION.

    C. NO WELDING PERMITTED ON MEMBERS SUPPORTING LOADS.

    D. WELD METAL SHALL HAVE A NOMINAL TENSILE STRENGTH OF 70,000 PSI MINIMUM.

    E. ALL WELDS USED IN PRIMARY MEMBERS AND CONNECTIONS IN THE LATERAL FORCE RESISTING SYSTEM (LFRS) SHALL BE MADE WITH A FILLER METAL THAT HAS A MINIMUM CHARPY V-NOTCH TOUGHNESS OF 20 FT-LBS AT MINUS 20° F, AS DETERMINED BY AWS CLASSIFICATION OR MANUFACTURER CERTIFICATION. SEE ELEVATION DRAWINGS FOR LOCATIONS OF THE LATERAL FORCE RESISTING SYSTEM.

    F. WHERE DEMAND CRITICAL WELDS HAVE FILLER METALS USED IN COMBINATION WITH FILLER METALS OF DIFFERENT PROCESSES (INTERMIX), PROVIDE CERTIFICATION OF CHARPY V-NOTCH COMPATIBILITY PER **AISC 341-16 & AMERICAN WELDING SOCIETY STRUCTURAL WELDING CODE SEISMIC SUPPLEMENT (AWS D1.8/D1.8M:2016)**.

11. THE CONTRACTOR SHALL BE RESPONSIBLE FOR ALL ERECTION AIDS AND JOINT PREPARATIONS THAT INCLUDE BUT ARE NOT LIMITED TO, ERECTION ANGLES, LIFT HOLES, AND OTHER AIDES, WELDING PROCEDURES, REQUIRED ROOT OPENINGS, ROOT FACE DIMENSIONS, GROOVE ANGLES, BACKING BARS, WELD EXTENSION TABS, COPES, SURFACE ROUGHNESS VALUES AND TAPERS OF UNEQUAL PARTS. THE CONTRACTOR SHALL BE RESPONSIBLE FOR THE COMPLIANCE WITH ALL CURRENT OSHA REQUIREMENTS.

12. ALL STEEL SHALL BE THOROUGHLY CLEANED, REMOVING ALL LOOSE MILL SCALE, GREASE, DIRT AND FOREIGN MATTER BY SCRAPING OR SANDBLASTING.

13. ALL STEEL TO BE GREY PRIMER COLOR. DO NOT SHOP PAINT TO THE FOLLOWING:

    A. SURFACES WHICH WILL BE ENCASED IN CONCRETE OR MORTAR. PAINT EMBEDDED STEEL WHICH IS PARTIALLY EXPOSED ON EXPOSED PORTIONS AND INITIAL TWO INCHES OF EMBEDDED PORTIONS ONLY.

    B. SURFACES WITHIN 2 INCHES OF JOINTS TO BE WELDED IN FIELD INCLUDING TOP FLANGES OF MEMBERS SUPPORTING STEEL DECKING WHICH ARE TO BE WELDED.

14. WHERE STRUCTURAL STEEL IS NOTED TO BE GALVANIZED, IT SHALL BE HOT-DIP GALVANIZED IN ACCORDANCE WITH **ASTM A123**, **ASTM A384**, AND **ASTM A385**. ALL SURFACES WITHIN TWO INCHES OF ANY FIELD WELD LOCATION SHALL BE FREE OF MATERIALS THAT WOULD PREVENT PROPER WELDING OF PRODUCE OBJECTIONABLE FUMES.

15. FIELD TOUCH-UP OF PRIMED, PAINTED, AND GALVANIZED SURFACES SHALL BE PERFORMED TO REPAIR COATING ABRASIONS, AS WELL AS TO PROTECT ALL AREAS AT CONNECTIONS.

16. FINAL PAINT AND COLOR FOR EXPOSED STEEL SHALL BE PER OWNER'S SPECIFICATION.

17. IMMEDIATELY AFTER ERECTION, CLEAN FIELD WELDS, BOLTED CONNECTIONS, AND ABRADED AREAS OF SHOP PAINT. APPLY PRIMER TO EXPOSED AREAS WITH SAME MATERIAL AS USED FOR SHOP PRIMER.

18. U.N.O. AT ALL EXPOSED STEEL FRAMING, PROVIDE THE FOLLOWING ARCHITECTURALLY EXPOSED STRUCTURAL STEEL (AESS) LEVEL OF FINISH PER AISC:

    A. STAIR FRAMING: AESS GATEGORY 4

    B. ALL OTHER: AESS GATEGORY 3

COLD FORMED STEEL FRAMING

1. ALL COLD FORMED STEEL STUDS, TRACKS AND JOIST 54 MIL (16 GAUGE) AND THICKER SHALL CONFORM TO **ASTM A-653**, GRADE 50, WITH A MINIMUM YIELD OF 50,000 PSI, AND A G60 COATING UNLESS NOTED OTHERWISE.

2. ALL COLD FORMED STEEL STUDS, TRACKS AND JOIST 43 MIL (18 GAUGE)AND LESS IN THICKNESS SHALL CONFORM TO **ASTM A-653**, GRADE 33, WITH A MINIMUM YIELD OF 33,000 PSI, AND A G60 COATING UNLESS NOTED OTHERWISE.

3. ALL COLD FORMED STEEL BRIDGING, END CLOSURES, AND ACCESSORIES SHALL CONFORM TO **ASTM A-611**, GRADE C, WITH A MINIMUM YIELD OF 33,000 PSI, UNLESS NOTED OTHERWISE.

4. FABRICATION AND ERECTION OF ALL COLD FORMED STEEL FRAMING MEMBERS SHALL CONFORM TO **AMERICAN IRON AND STEEL INSTITUTE NORTH AMERICAN SPECIFICATION FOR THE DESIGN OF COLD-FORMED STEEL STRUCTURAL MEMBERS (AISI S100-16)** AND **AMERICAN IRON AND STEEL INSTITUTE NORTH AMERICAN STANDARD FOR COLD-FORMED STEEL FRAMING - GENERAL PROVISIONS (AISI S200-16)**.

5. ALL COLD FORMED STEEL PRODUCTS AND ACCESSORIES SUCH AS STUDS, TRACKS, JOISTS, AND MISCELLANEOUS COLD FORMED STEEL FRAMING MEMBERS DESIGNATED ON THESE DRAWINGS AND REQUIRED BY THE COLD FORMED STEEL MANUFACTURER SHALL BE MANUFACTURED BY THE CURRENT MEMBERS OF **STEEL STUD MANUFACTURERS ASSOCIATION (SSMA)** WITH **ICC-ES ESR-3064P AND CLARK DIETRICH BUILDING SYSTEMS ICC ESR-1166P**. DEEP LEG TRACKS (>2" FLANGE) SHALL BE BY **CLARK DIETRICH BUILDING SYSTEMSICC-ESR-1166P**, ALTERNATE COLD FORMED STEEL FRAMING SYSTEMS MAY BE SUBMITTED FOR APPROVAL CONSIDERATION TO THE DESIGNER WITH A CURRENT **ICC-ES** OR **IAPMO** REPORT.

6. WELDING OF ALL COLD FORMED STEEL FRAMING SHALL CONFORM TO **AWS D1.3/D1.3M:2008**. REFER TO "STRUCTURAL STEEL SPECIFICATIONS" FOR ADDITIONAL WELDING REQUIREMENTS. ALL WELDS OF GALVANIZED STEEL SHALL BE TOUCHED UP WITH ZINC-RICH PAINT. ALL WELDS OF CARBON SHEET STEEL SHALL BE TOUCHED UP WITH PAINT.

7. ALL FRAMING COMPONENTS SHALL BE CUT SQUARELY FOR ATTACHMENT TO PERPENDICULAR MEMBERS, OR AS REQUIRED FOR AN ANGULAR FIT AGAINST ABUTTING MEMBERS. MEMBERS SHALL BE HELD POSITIVELY IN PLACE UNTIL PROPERLY FASTENED.

8. FRAMING COMPONENTS MAY BE PRE-ASSEMBLED INTO PANELS PRIOR TO ERECTION. PREFABRICATED PANELS SHALL HAVE COMPONENTS ATTACHED IN A MANNER AS TO PREVENT RACKING OF THE PANEL AND TO PREVENT DISTORTION IN ANY MEMBER WHILE LIFTING AND TRANSPORTING.

9. TRACKS SHALL BE SECURELY ANCHORED TO THE SUPPORTING STRUCTURE AS SHOWN ON THE DRAWINGS. AT TRACK BUTT JOINTS, ABUTTING PIECES OF TRACK SHALL BE SECURELY ANCHORED TO A COMMON STRUCTURAL ELEMENT, OR THEY SHALL BE BUTT-WELDED OR SPLICED TOGETHER.

10. FOR TRACK CONNECTIONS AT INTERIOR NON-BEARING, NON-SHEAR WALLS, APPROVED POWER DRIVEN FASTENERS MAY BE USED. INSTALL IN ACCORDANCE WITH THE DRAWINGS, THE MANUFACTURER'S RECOMMENDATIONS AND ICC-ES APPROVALS. A 5/8"Ø x 10" HEX HEAD ANCHOR BOLTS @ 32" O.C. MAY BE USED IN LIEU OF A POWER DRIVEN FASTENER. SEE TYPICAL DETAIL S004.2/S004.2

11. STUDS SHALL BE PLUMBED, ALIGNED AND SECURELY ATTACHED TO THE FLANGE OR WEBS OF BOTH UPPER AND LOWER TRACKS, U.N.O.

12. WALL STUD BRIDGING SHALL BE ATTACHED IN A MANNER TO PREVENT STUD ROTATION. BRIDGING ROWS SHALL BE SPACED ACCORDING TO THE COLD FORMED STEEL MANUFACTURER'S REQUIREMENTS, BUT NOT GREATER THAN 4'-0" ON CENTER. BRIDGING SHALL BE IN PLACE PRIOR TO PLACING LOADINGS.

13. TEMPORARY BRACING OF ALL WALL PANELS SHALL BE PROVIDED UNTIL ERECTION IS COMPLETED.

14. ALL MEMBER TO MEMBER CONNECTIONS SHALL BE CONNECTED WITH MINIMUM (2) #10 SCREWS WITH 7/16" DIAMETER PAN WASHER HEADS BY 1/2" LONG, UNLESS NOTED OTHERWISE. A 1/16" FILLET WELD BY 3/4" LONG MAY BE SUBSTITUTED FOR THE SCREWS AT THE CONTRACTOR'S OPTION. SEE ABOVE FOR ADDITIONAL WELDING REQUIREMENTS.

15. SPLICES IN AXIALLY LOADED STUDS SHALL NOT BE PERMITTED.

16. JOISTS SHALL BE LOCATED DIRECTLY OVER BEARING STUDS OR A LOAD DISTRIBUTION MEMBER SHALL BE PROVIDED AT THE TOP OF THE BEARING WALL.

17. WEB STIFFENERS SHALL BE PROVIDED AT REACTION POINTS AND/OR POINTS OF CONCENTRATED LOADS WHERE INDICATED ON THE DRAWINGS.

18. JOIST BRIDGING SHALL BE PROVIDED WHERE INDICATED ON THE DRAWINGS. BRIDGING SHALL BE IN PLACE PRIOR TO PLACING LOADS.

19. END BLOCKING SHALL BE PROVIDED WHERE JOIST ENDS ARE NOT OTHERWISE RESTRAINED FROM ROTATION.

20. FASTENERS THROUGH FIRE TREATED SHEATHING SHALL BE OF HOT DIPPED ZINC COATED GALVANIZED. STEEL, STAINLESS, OR SILICONE BRONZE. FASTENERS OTHER THAN NAILS, TIMBER RIVETS, WOOD SCREWS, & LAG SCREWS SHALL BE PERMITTED TO BE MECHANICALLY DEPOSITED ZINC-COATED STEEL WITH COATING WEIGHTS IN ACCORDANCE WITH **ASTM B695, CLASS 55** MIN. VERIFY WITH SHEATHING MANUFACTURER.

21. ALL SLIP CONNECTIONS, "VERTICLIP", "DRIFTCLIP", & "DRIFT TRAK" SHALL BE MANUFACTURED BY THE STEEL NETWORK, INSTALLED PER MFR. GUIDELINES AND CONFORM TO **ICC ESR 2049 (REISSUED: DECEMBER 2022)**.

STEEL DECK NOTES

1. STEEL DECKING SHALL BE AS INDICATED ON PLANS. FABRICATION AND INSTALLATION SHALL CONFORM TO **IAPMO-ES REPORT NO. ER-0423 (ISSUED: MARCH, 2022)** FOR VERCO DECKING, INC.

2. DECK PANELS SHALL SPAN OVER THREE SUPPORTS WHERE STRUCTURAL STEEL FRAMING PERMITS. FLOOR DECK SUPPORTING CONCRETE FILL MUST SPAN OVER THREE SUPPORTS FOR THE OMISSION OF SHORING. DECK PANELS SHALL INCLUDE ALL ACCESSORIES FOR THIS TYPE OF DECKING; SUCH AS CLOSURE, FLASHING, EDGE FORMS, ETC. TO COMPLETE THE INSTALLATION OF THE STEEL DECK. PANELS SHALL BE ALIGNED AND PLACED IN ACCORDANCE WITH THE MANUFACTURER'S ICC-ES OR IAPMO-ES REPORT AND THESE DRAWINGS.

3. OPENINGS IN THE STEEL DECKING SUPPORTING CONCRETE FILL CUTTING NO MORE THAN ONE FLUTE AND LESS THAN 6" IN DIAMETER NEED NO REINFORCING. FOR OPENING EXCEEDING THIS LIMITATION, SEE TYPICAL DETAILS.

4. FOR NELSON STUD ANCHOR REQUIREMENTS SEE STRUCTURAL STEEL SPECIFICATIONS.

5. WELDING SHALL CONFORM TO **AWS D1.1/D1.1M:2015** AND **AMERICAN WELDING SOCIETY STRUCTURAL WELDING CODE SHEET STEEL (AWS D1.3/D1.3M:2008)**. SEE STRUCTURAL STEEL SPECIFICATIONS FOR ADDITIONAL WELDING REQUIREMENTS.

6. ENDS OF STEEL DECKING PANELS SHALL BUTT OVER SUPPORTS (NO LAP, U.N.O.). DECK SHALL BEAR 2" MINIMUM ON SUPPORTING FRAMEWORK.

7. THE STEEL DECKING SHALL BE CLEANED OF ALL DIRT, DEBRIS, OIL, WATER AND ANY FOREIGN MATERIAL PRIOR TO APPLICATION OF CONCRETE.

8. APPROVED SHOP DRAWINGS SHOWING LAYOUT AND FASTENING PATTERN MUST BE ON THE JOB SITE FOR INSPECTION PURPOSES.

POWER ACTUATED FASTENERS

1. POWER ACTUATED FASTENERS (PAF) SPECIFIED IN THESE DRAWINGS SHALL BE AS FOLLOWS:

   COLD FORMED STEEL TO CONCRETE: HILTI X-U (0.157"Ø)
   COLD FORMED STEEL TO STRUCT. STEEL: HILTI X-U 15 (0.145"Ø)
   METAL DECK TO STRUCT. STEEL: SEE 3/S009.2 FOR MFR & SIZE

2. POWER ACTUATED FASTENERS SHALL BE INSTALLED IN ACCORDANCE WITH THE DRAWINGS, MANUFACTURER'S RECOMMENDATIONS, AND **ICC ESR-2269 REPORT**.

3. CONCRETE APPLICATIONS: POWER ACTUATED FASTENERS SHALL NOT BE INSTALLED PRIOR TO CONCRETE ATTAINING FULL STRENGTH AS SPECIFIED IN THESE DRAWINGS. MINIMUM SPACING BETWEEN FASTENERS MUST BE 4 INCHES, MINIMUM EDGE DISTANCE MUST BE 3 INCHES, AND MINIMUM EMBEDMENT MUST BE 1 1/4 INCHES, UNLESS NOTED OTHERWISE.

4. STRUCT. STEEL APPLICATIONS: POWER ACTUATED FASTENERS MUST BE DRIVEN TO WHERE THE POINT OF THE FASTENER PENETRATES TROUGH THE STEEL BASE MATERIAL, UNLESS NOTED OTHERWISE. MINIMUM SPACING BETWEEN FASTENERS MUST BE 1 INCH AND MINIMUM EDGE DISTANCE MUST BE 1/2 INCH.

STRUCTURAL OBSERVATION PROGRAM

1. STRUCTURAL ENGINEER OF RECORD SHALL PROVIDE STRUCTURAL OBSERVATION PER **CBC 1704A.6**. CONTRACTOR SHALL NOTIFY STRUCTURAL ENGINEER 48 HOURS PRIOR TO COMPLETION OF THE FOLLOWING TO ARRANGE FOR PERIODIC OBSERVATION:

   A. FOUNDATION AND SLAB REINFORCING PRIOR TO PLACEMENT OF CONCRETE.

   B. FLOOR DECK WELDING PRIOR TO PLACEMENT OF CONCRETE FILL.

   C. ROOF DECK WELDING PRIOR TO PLACEMENT OF ROOFING.

   D. FLOOR DECK REINFORCING AND STUD PLACEMENT ON BEAMS PRIOR TO PLACEMENT OF CONCRETE FILL.

   E. FLOOR SHEATHING FASTENING PRIOR TO PLACEMENT OF FINISH.

   F. SHEAR WALL SHEATHING FASTENING PRIOR TO PLACEMENT OF FINISH.

2. OBSERVED DEFICIENCIES SHALL BE REPORTED IN WRITING TO THE OWNER'S REPRESENTATIVE, SPECIAL INSPECTOR, CONTRACTOR, AND BUILDING OFFICIAL. THE STRUCTURAL OBSERVER SHALL SUBMIT TO THE BUILDING OFFICIAL A WRITTEN STATEMENT THAT THE SITE VISITS HAVE BEEN MADE AND IDENTIFYING ANY REPORTED DEFICIENCIES WHICH, TO THE BEST OF THE STRUCTURAL OBSERVER'S KNOWLEDGE, HAVE NOT BEEN RESOLVED. THE STRUCTURAL OBSERVER SHALL MAKE ADDITIONAL SITE VISITS AS NECESSARY TO VERIFY THAT ALL REPORTED DEFICIENCIES HAVE BEEN SATISFACTORILY CORRECTED.

SPECIAL INSPECTION

1. IN ACCORDANCE WITH **CBC SECTION 110**, **SECTION 1704A**, AND **SECTION 1705A**, OWNER SHALL EMPLOY AN INDEPENDENT AGENCY TO PERFORM REQUIRED TESTS AND SPECIAL INSPECTIONS DURING CONSTRUCTION PER THE REQUIREMENTS OF **CBC CHAPTER 17A**, THE DIVISION OF THE STATE ARCHITECTS, AND THE CONTRACT DOCUMENTS.

2. TESTING AND SPECIAL INSPECTION REPORTS SHALL BE PREPARED FOR EACH INSPECTION ITEM ON A DAILY BASIS WHENEVER WORK IS PERFORMED ON THAT ITEM FOLLOWING THE CONTINUOUS OR PERIODIC REQUIREMENTS SPECIFIED.

3. REPORTS SHALL INDICATE WHETHER THE WORK INSPECTED WAS DONE IN CONFORMANCE OR NONCONFORMANCE WITH APPROVED CONSTRUCTION DOCUMENTS. NONCONFORMITIES SHALL BE BROUGHT TO THE IMMEDIATE ATTENTION OF THE CONTRACTOR FOR CORRECTION, IF NOT CORRECTED, THE NONCONFORMITIES SHALL BE BROUGHT TO THE ATTENTION OF THE DIVISION OF THE STATE ARCHITECTS AND THE ARCHITECT (STRUCTURAL ENGINEER) PRIOR TO THE COMPLETION OF THAT PHASE OF WORK. A FINAL REPORT DOCUMENTING REQUIRED SPECIAL INSPECTION AND CORRECTION OF NONCONFORMITIES SHALL BE SUBMITTED UPON COMPLETION OF WORK.

4. TESTING AND SPECIAL INSPECTION REPORTS SHALL BE DISTRIBUTED TO OWNER, CONTRACTOR, THE DIVISION OF THE STATE ARCHITECT, ARCHITECT AND STRUCTURAL ENGINEER.

5. TESTING AND SPECIAL INSPECTION SHALL BE PROVIDED ON THE ITEMS INDICATED IN THE PROJECT MANUAL AND FORM **DSA-103 STATEMENT OF STRUCTURAL TESTS AND SPECIAL INSPECTIONS**.

SUBMITTAL/SPECIAL CONDITIONS

1. PRIOR TO COMMENCEMENT OF EXCAVATION FOR FOUNDATIONS (AT LEAST 48 HOURS) THE CONTRACTOR IS TO CONTACT THE GEOTECHNICAL ENGINEER, WHO IS TO ADVISE THE BUILDING OFFICIAL IN WRITING THAT: THE BUILDING PAD WAS PREPARED AND COMPACTED IN ACCORDANCE WITH THE SOILS REPORT RECOMMENDATIONS. ADDITIONALLY THAT THE FOUNDATION GRADING WAS PERFORMED IN CONFORMANCE WITH THE SOILS REPORT RECOMMENDATIONS AND APPROVED PLANS. A COPY OF THE REPORT SHALL BE GIVEN TO THE STRUCTURAL ENGINEER OF RECORD.

2. PRIOR TO REQUESTING A FOUNDATION INSPECTION (AT LEAST 48 HOURS) THE CONTRACTOR IS TO CONTACT THE GEOTECHNICAL ENGINEER, WHO IS TO ADVISE THE BUILDING OFFICIAL IN WRITING THAT: THE BUILDING FOUNDATION FOOTING EXCAVATION DEPTH, BACKFILL MATERIALS AND DRAINAGE SUBSTRUCTURAL COMPLIANCE CONFORMS WITH THE SOILS REPORT RECOMMENDATIONS AND APPROVED PLANS. A COPY OF THE REPORT SHALL BE GIVEN TO THE STRUCTURAL ENGINEER OF RECORD.

3. SPECIAL INSPECTION REPORTS ARE TO BE SUBMITTED DIRECTLY TO THE ENFORCEMENT AGENCY PER **CBC SEC. 1704A.2.4** (WITH COPIES TO STRUCTURAL ENGINEER OF RECORD, GENERAL CONTRACTOR AND OWNER).

4. PROJECT INSPECTOR SHALL BE DSA CERTIFIED ACCORDING TO PART 1, 4-333.1. SPECIAL INSPECTOR SHALL BE DSA APPROVED ACCORDING TO PART 1, 4-335 (f).

5. THE FOLLOWING SHOP DRAWINGS/SUBMITTALS SHALL BE PROVIDED FOR REVIEW BY THE STRUCTURAL ENGINEER OF RECORD PRIOR TO FABRICATION OR DELIVERY.

   A. CONCRETE MIX DESIGN
   B. REINFORCING STEEL
   C. STRUCTURAL STEEL
   D. METAL DECK
   E. COLD FORMED METAL FRAMING & ACCESSORIES
   F. MISCELLANEOUS STEEL
   G. CONDUIT EMBEDDED IN CONCRETE
   H. CONTRACTORS STATEMENT OF RESPONSIBILITY

6. PRODUCT SUBSTITUTIONS MAY BE ALLOWED ONLY IF THEY MEET THE REQUIREMENTS OF THESE SHEET SPECIFICATION AND THE PROJECT MANUAL, AND IF COMPLETE WRITTEN ENGINEERING DATA FOR EACH CONDITION REQUIRED FOR THIS PROJECT IS PROVIDED TO THE STRUCTURAL ENGINEER OF RECORD TWO WEEKS PRIOR TO BID DATE AND APPROVED IN WRITTEN ADDENDA BY THE ARCHITECT. DATA IS TO INDICATE CODE BASIS BY YEAR, AUTHORITY FOR STRESSES AND STRESS INCREASES , IF ANY, AND AMOUNT OF EXPECTED DEFLECTION FOR FLEXURAL MEMBERS UNDER (1) TOTAL LOAD AND (2) LIVE LOAD ONLY. ALL INCREASED COSTS IN MECHANICAL, SPRINKLER, ELECTRICAL OR GENERAL INSTALLATION AND ANY ARCHITECTURAL OR STRUCTURAL REDESIGN RESULTING FROM SUBSTITUTION SHALL BE BORNE BY THE GENERAL CONTRACTOR.

7. SUBSTITUTIONS AFFECTING STRUCTURAL SAFETY, FIRE AND LIFE SAFETY OR ACCESS COMPLIANCE SHALL BE APPROVED BY DSA PRIOR TO FABRICATIONS OR USE.

8. INSTALLATION OF DEFERRED APPROVAL ITEMS SHALL NOT BE STARTED UNTIL CONTRACT DRAWINGS, SPECIFICATIONS AND ENGINEERING CALCULATIONS FOR THE ACTUAL SYSTEMS TO BE INSTALLED HAVE BEEN ACCEPTED AND SIGNED BY THE ARCHITECT OR STRUCTURAL ENGINEER IN RESPONSIBLE CHARGE AND APPROVED BY DSA. DEFERRED APPROVAL ITEMS ARE AS FOLLOWS:

   A. N/A FOR STRUCTURAL SYSTEMS
   B. SEE PROJECT COVER SHEET G000 FOR OTHERS

CONTRACTOR RESPONSIBILITY

1. CONTRACTOR RESPONSIBILITY - **CBC 2022 SECTION 1704A.4**: EACH CONTRACTOR RESPONSIBLE FOR THE CONSTRUCTION OF A MAIN WIND- OR SEISMIC- FORCE-RESISTING SYSTEM, DESIGNATED SEISMIC SYSTEM OR A WIND- OR SEISMIC-RESISTING COMPONENT LISTED IN THE STATEMENT OF SPECIAL INSPECTIONS (**CBC SECTION 1704A.3**) SHALL SUBMIT A WRITTEN STATEMENT OF RESPONSIBILITY TO THE BUILDING OFFICIAL AND THE OWNER PRIOR TO THE COMMENCEMENT OF WORK ON THE SYSTEM OR COMPONENT. THE CONTRACTOR'S STATEMENT OF RESPONSIBILITY SHALL CONTAIN ACKNOWLEDGEMENT OF AWARENESS OF THE SPECIAL REQUIREMENTS CONTAINED IN THE STATEMENT OF SPECIAL INSPECTION.

ABBREVIATIONS

&	AND	JST.	JOIST
L	ANGLE	JT.	JOINT
@	AT		
C.L.	CENTERLINE		
Ø	DIAMETER OR ROUND	K.O.	KNOCK OUT
//	PARALLEL	K.O.P.	KNOCK OUT PANEL
⊥	PERPENDICULAR		
PL.	PLATE		
#	POUND OR NUMBER	LB(S)	POUND (POUNDS)
(C=)	CAMBER	L.F.	LINEAL FOOT
(E)	EXISTING	LFRS	LATERAL FORCE RESISTING SYSTEM
(N)	NEW	L.H.	LEFT HAND
		LL	LIVE LOAD
		LLH	LONG LEG HORIZ.
A.B.	ANCHOR BOLT	LLV	LONG LEG VERT.
ABV.	ABOVE	LOC.	LOCATION
ADDL	ADDITIONAL	LSL	LAMINATED STRAND LUMBER
ADJC.	ADJACENT	LT.WT.	LIGHT WEIGHT
A.F.F.	ABOVE FINISH FLOOR	LVL	LAMINATED VENEER LUMBER
A.F.G.	ABOVE FINISH GRADE		
AGG.	AGGREGATE	MACH.	MACHINE
ALT.	ALTERNATE	MAINT.	MAINTENANCE
ALUM.	ALUMINUM	MAX.	MAXIMUM
APPROX.	APPROXIMATE	M.B.	MACHINE BOLT
ARCH.	ARCHITECT(URAL)	M.B.M.	METAL BUILDING MFR.
		MECH.	MECHANICAL
		MED.	MEDIUM
BEL.	BELOW	MEMB.	MEMBRANE
BLDG.	BUILDING	MET.	METAL
BLK	BLOCK	MEZZ.	MEZZANINE
BLKG.	BLOCKING	MFR.	MANUFACTURER
BM.	BEAM	MIL.	MILLIMETER
B.F.	BOUNDARY FASTENING	MIN.	MINIMUM
B.O.D.	BOTTOM OF DECK	MISC.	MISCELLANEOUS
B.O.F.	BOTTOM OF FOOTING	MPH	MILES PER HOUR
BOT.	BOTTOM	MTL	METAL
BRG.	BEARING		
BTWN.	BETWEEN		
B.U.	BUILT-UP	N	NORTH
		N.I.C.	NOT IN CONTRACT
CANT.	CANTILEVER	NO.	NUMBER
C.F.	CUBIC FOOT	NOM.	NOMINAL
C.J.	CONSTRUCTION JOINT/ CONTROL JOINT	NS	NEAR SIDE
		N.T.S.	NOT TO SCALE
C.L.	CENTER LINE	N.W.	NORMAL WEIGHT
CLG.	CEILING		
CLR.	CLEAR/CLEARANCE	O/	OVER
CMU	CONCRETE MASONRY UNIT	O.C.	ON CENTER
COL.	COLUMN	O.D.	OUTSIDE DIAMETER/DIM.
CONC.	CONCRETE	OFOW	OUTSIDE FACE OF WALL
CONN.	CONNECTION	O.H.	OPPOSITE HAND
CONST.	CONSTRUCTION	O.H.M.S.	OVAL HEAD MACH. SCREW
CONT.	CONTINUOUS	O.H.W.S.	OVAL HEAD WOOD SCREW
CONTR.	CONTRACTOR	OPNG.	OPENING
COORD.	COORDINATION	OPP	OPPOSITE
CP	COMPLETE PENETRATION	ORIG.	ORIGINAL
C.T.C.	CENTER TO CENTER	OVHD	OVER HEAD
CTR.	CENTER	OWSJ	OPEN WEB STEEL JOIST
CTRD.	CENTERED		
CTSK	COUNTERSUNK		
CU.	CUBIC	P.A.F.	POWER ACTUATED FASTENER
C.Y.	CUBIC YARD	PERP.	PERPENDICULAR
		PL.	PLATE
		PLY.	PLYWOOD
DBL.	DOUBLE	PP	PARTIAL PENETRATION
DEMO	DEMOLISH / DEMOLITION	PSF	POUNDS PER SQUARE FOOT
DET.	DETAIL	PSI	POUNDS PER SQUARE INCH
D.F.	DOUGLAS FIR	PSL	PARALLEL STRAND LUMBER
DIA.	DIAMETER	PT.	POINT
DIAG.	DIAGONAL	P.T.	POST TENSION
DIM.	DIMENSION	P.T.F.D.F.	PRESSURE TREATED DOUGLAS FIR
DL	DEAD LOAD		
DN.	DOWN	PTN.	PARTITION
DP.	DEEP	PW	PLYWOOD
DWG.(S)	DRAWING(S)		
DWL	DOWEL		
		R.	RADIUS
E	EAST	REINF.	REINFORCING
EA.	EACH	REM.	REMOVE
E.F.	EACH FACE	REQD.	REQUIRED
E.F.	EDGE FASTENING	R.H.	RIGHT HAND
E.J.	EXPANSION JOINT	R.H.W.S.	ROUND HEAD WOOD SCREW

\\tetr-file1\Users\luis.valtierra\Documents\12498-S-UC_luis.valtierra.rvt

CONCRETE

REINFORCING BAR SPLICE LENGTH - GRADE 60 OR LESS

BAR #	CONC. f'c = 2,500 psi SPLICE [4,8,9,10] TOP [3]	SPLICE OTHER [3]	DEVELOPMENT [8] TOP [3]	DEVELOPMENT OTHER [3]	L_{dh} [7,8,9]	CONC. f'c = 3,000 psi SPLICE [4,8,9,10] TOP [3]	SPLICE OTHER [3]	DEVELOPMENT [8] TOP [3]	DEVELOPMENT OTHER [3]	L_{dh} [7,8,9]	CONC. f'c = 4,000 psi SPLICE [4,8,9,10] TOP [3]	SPLICE OTHER [3]	DEVELOPMENT [8] TOP [3]	DEVELOPMENT OTHER [3]	L_{dh} [7,8,9]	CONC. f'c = 5,000 psi SPLICE [4,8,9,10] TOP [3]	SPLICE OTHER [3]	DEVELOPMENT [8] TOP [3]	DEVELOPMENT OTHER [3]	L_{dh} [7,8,9]
#3	32"	24"	24"	18"	7"	30"	23"	23"	17"	6"	26"	20"	20"	15"	6"	23"	17"	17"	13"	6"
#4	42"	32"	32"	24"	9"	38"	29"	29"	22"	8"	33"	25"	25"	19"	7"	30"	23"	23"	17"	6"
#5	51"	39"	39"	30"	11"	49"	37"	37"	28"	10"	42"	32"	32"	24"	9"	38"	29"	29"	22"	8"
#6	62"	47"	47"	36"	13"	56"	43"	43"	33"	12"	50"	38"	38"	29"	10"	45"	34"	23"	26"	9"
#7	90"	69"	69"	53"	15"	82"	63"	63"	48"	14"	72"	55"	55"	42"	12"	65"	50"	50	38"	11"
#8	102"	78"	78"	60"	17"	94"	72"	72"	55"	16"	82"	63"	63"	48"	14"	73"	56"	56"	43"	12"
#9	116"	89"	89"	68"	19"	106"	81"	81"	62"	18"	93"	71"	71"	54"	15"	82"	63"	63"	48"	14"
#10	132"	101"	101"	77"	22"	119"	91"	91"	70"	20"	104"	80"	80"	61"	17"	93"	71"	71"	54"	16"
#11	145"	111"	111"	85"	24"	133"	102"	102"	78"	22"	115"	88"	88"	67"	19"	102"	78"	78"	60"	17"
#14	**NP**	**NP**	133"	102"	41"	**NP**	**NP**	121"	93"	38"	**NP**	**NP**	106"	81"	33"	**NP**	**NP**	94"	72"	29"
#18	**NP**	**NP**	177"	136"	55"	**NP**	**NP**	162"	124"	50"	**NP**	**NP**	141"	108"	43"	**NP**	**NP**	125"	96"	39"

* NP: NOT PERMITTED

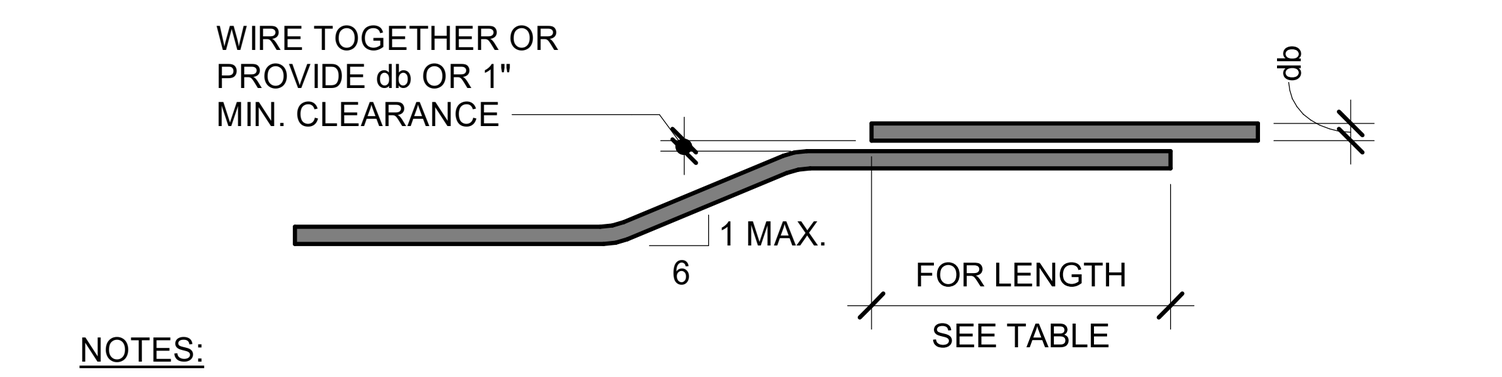

NOTES:
1. SPLICE LENGTHS ARE GIVEN FOR CONCRETE WITH A MINIMUM COMPRESSIVE STRENGTH LISTED AT 28 DAYS.
2. FOR EPOXY COATED REBAR, MULTIPLY TABULATED VALUE BY 1.5.
3. TOP BARS ARE STRAIGHT HORIZONTAL BARS WITH MORE THAN 12" OF FRESH CONCRETE BELOW. OTHER BARS ARE STRAIGHT BOTTOM OR STRAIGHT VERTICAL BARS.
4. SPLICE LENGTHS SHALL BE CLASS "B", U.N.O. CLASS "A" SPLICES AS DEFINED IN THE ACI 318 MAY BE REDUCED BY 30 PERCENT.
5. SCHEDULE IS FOR 60,000 psi GRADE STEEL.
6. SCHEDULE IS FOR HARDROCK CONCRETE. INCREASE SCHEDULE VALUES BY 1.33 FOR LIGHTWEIGHT CONCRETE.
7. HOOKED BARS ARE VERTICAL OR HORIZONTAL BARS TERMINATING WITH STANDARD HOOKS THAT COMPLY WITH DETAIL
8. CLEAR SPACING BETWEEN BARS BEING SPLICED OR DEVELOPED SHALL BE 2 BAR DIAMETERS (MIN.).
9. CONCRETE CLEAR COVER OVER BARS BEING DEVELOPED SHALL BE 1 BAR DIAMETER (MIN.).
10. WHEN SPLICING TWO BARS OF DIFFERING DIAMETER, THE SPLICE LENGTH FOR THE LARGER BAR SHALL GOVERN.

REINF. BAR SPLICE FOR CONC. — N.T.S. 1

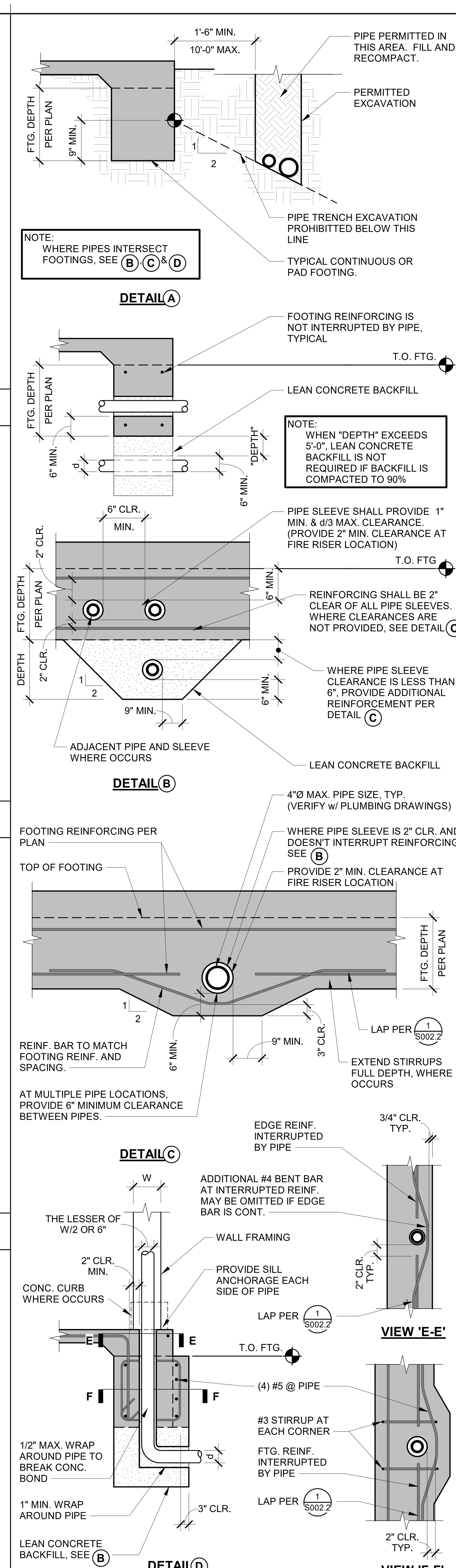

NOTES:
1. PIPE SHOWN, CONDUIT SIM.
2. DO NOT LOCATE VERT. PIPE ADJACENT TO HOLDOWN ANCHORS (18" MIN.).

PIPES AT FOOTINGS — N.T.S. 20

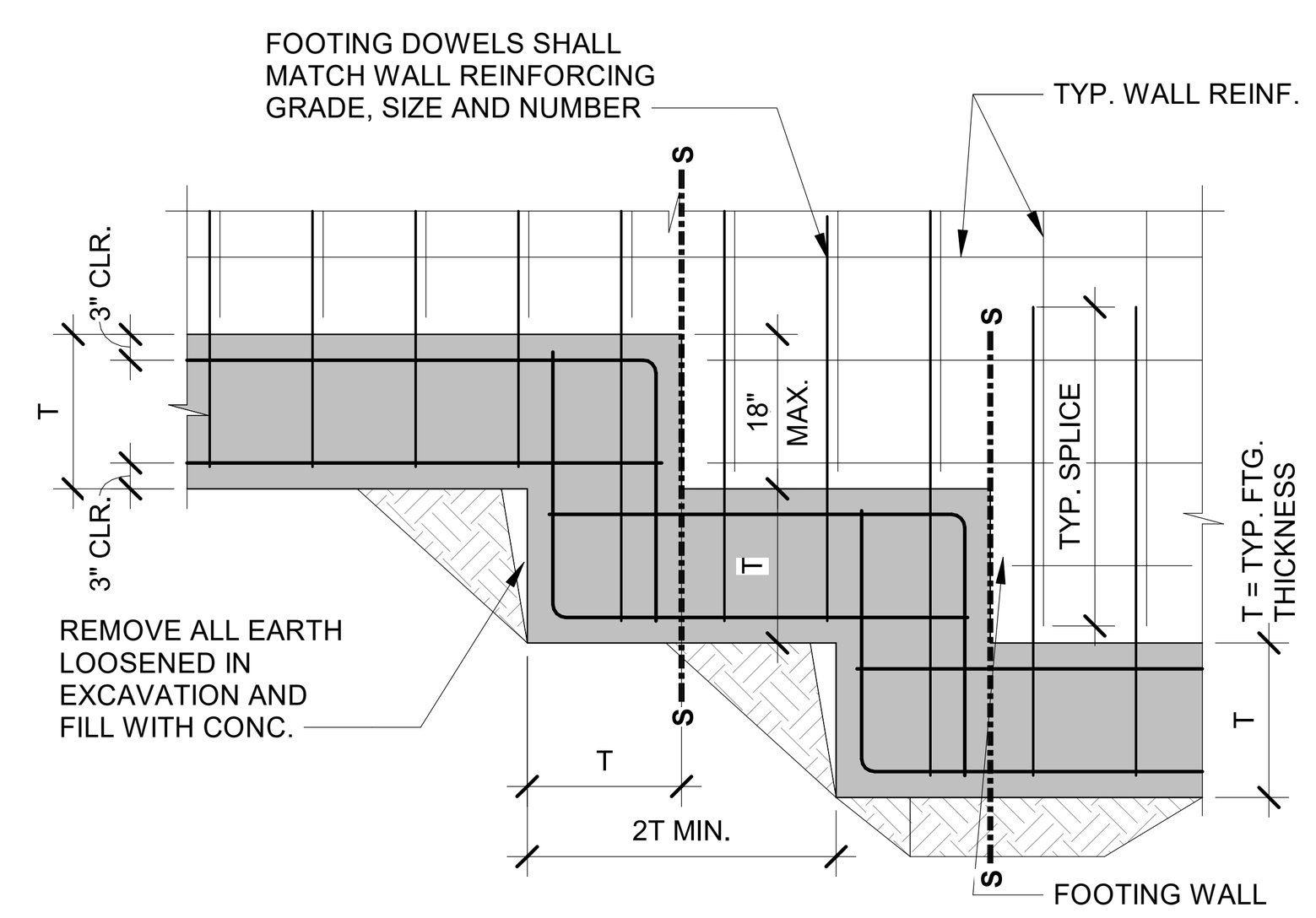

STEP IN WALL CONT. FTG. — N.T.S. 12

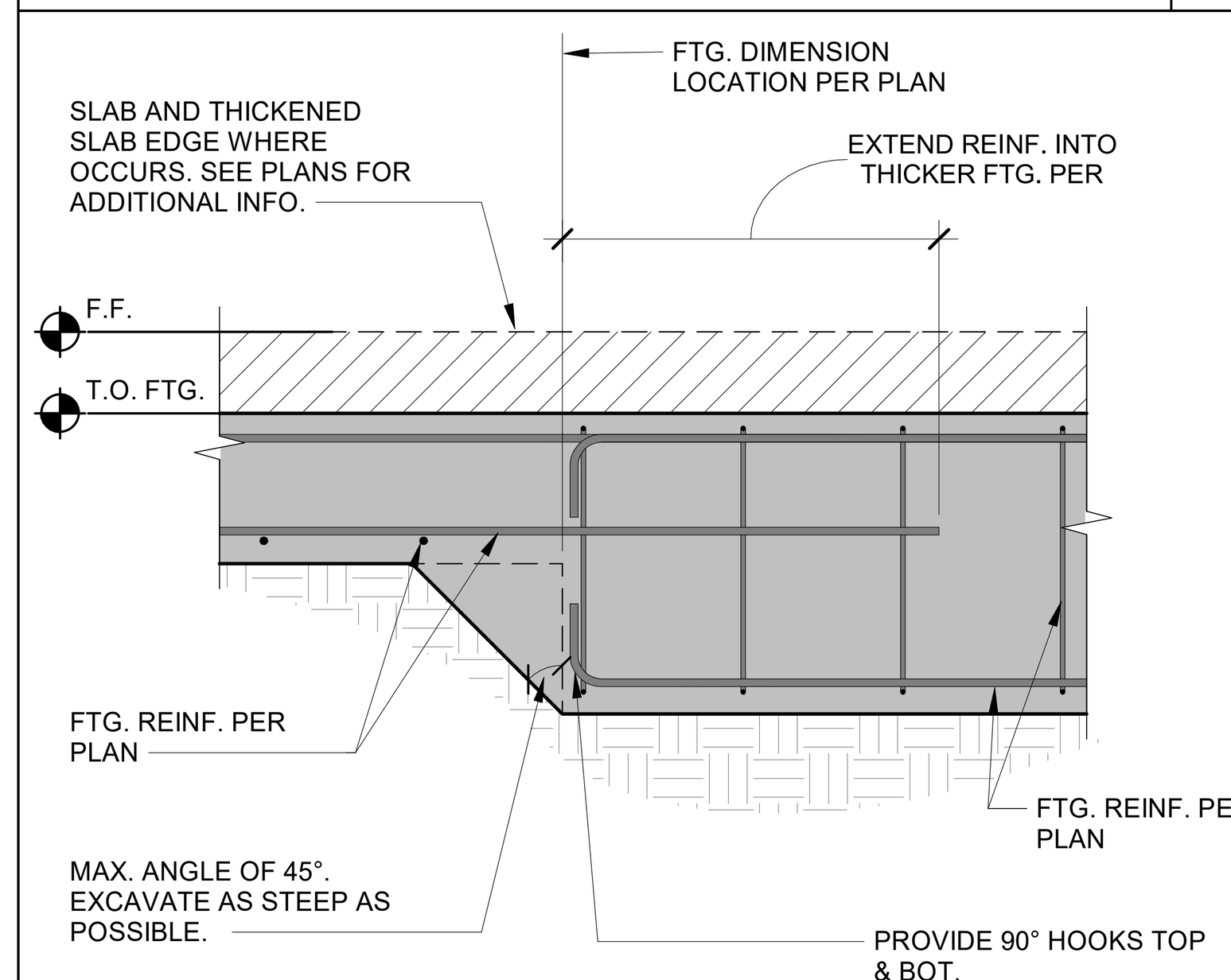

STEPPED BOTTOM FOOTING — N.T.S. 13

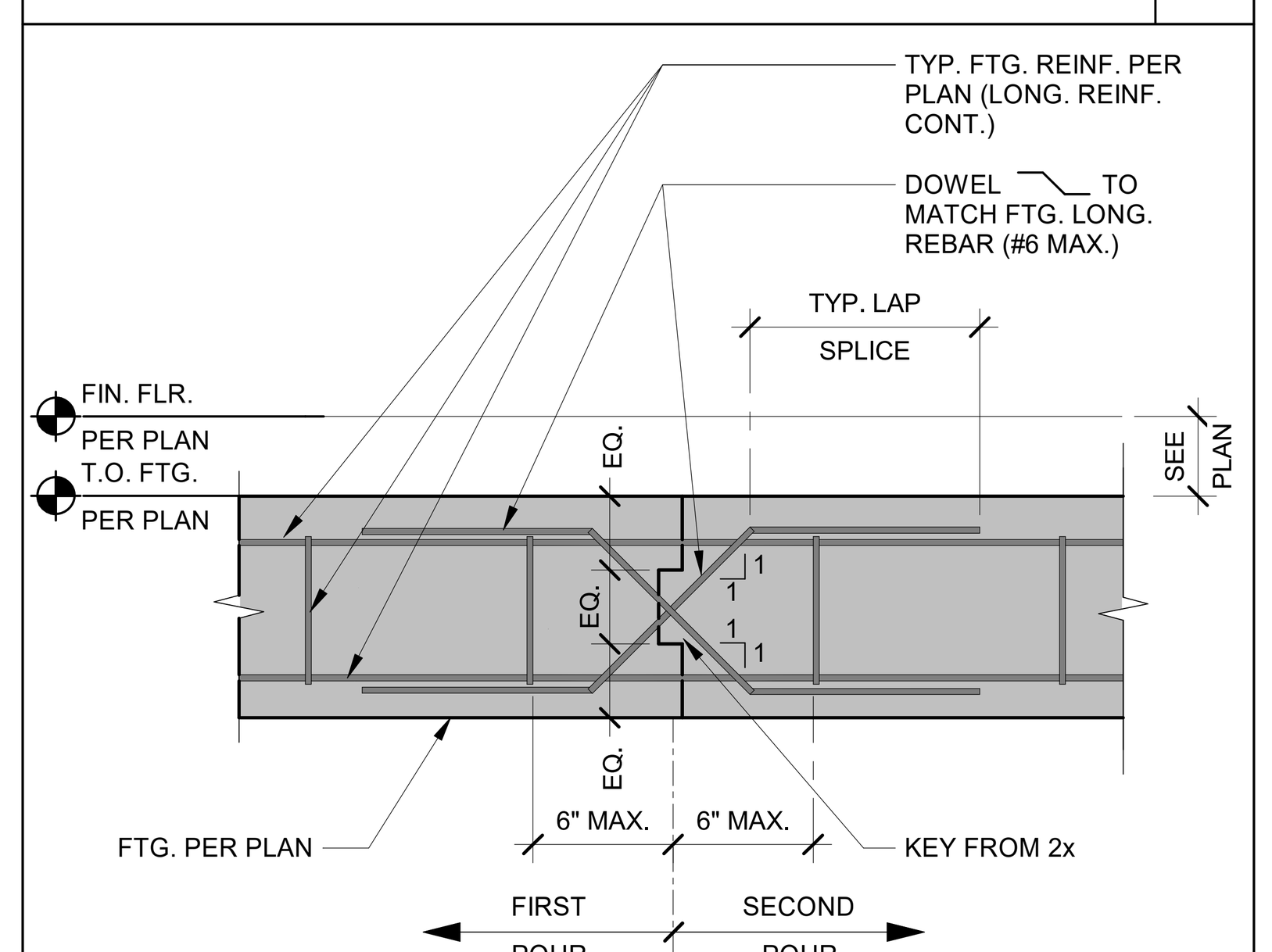

FOOTING CONSTRUCTION — N.T.S. 14

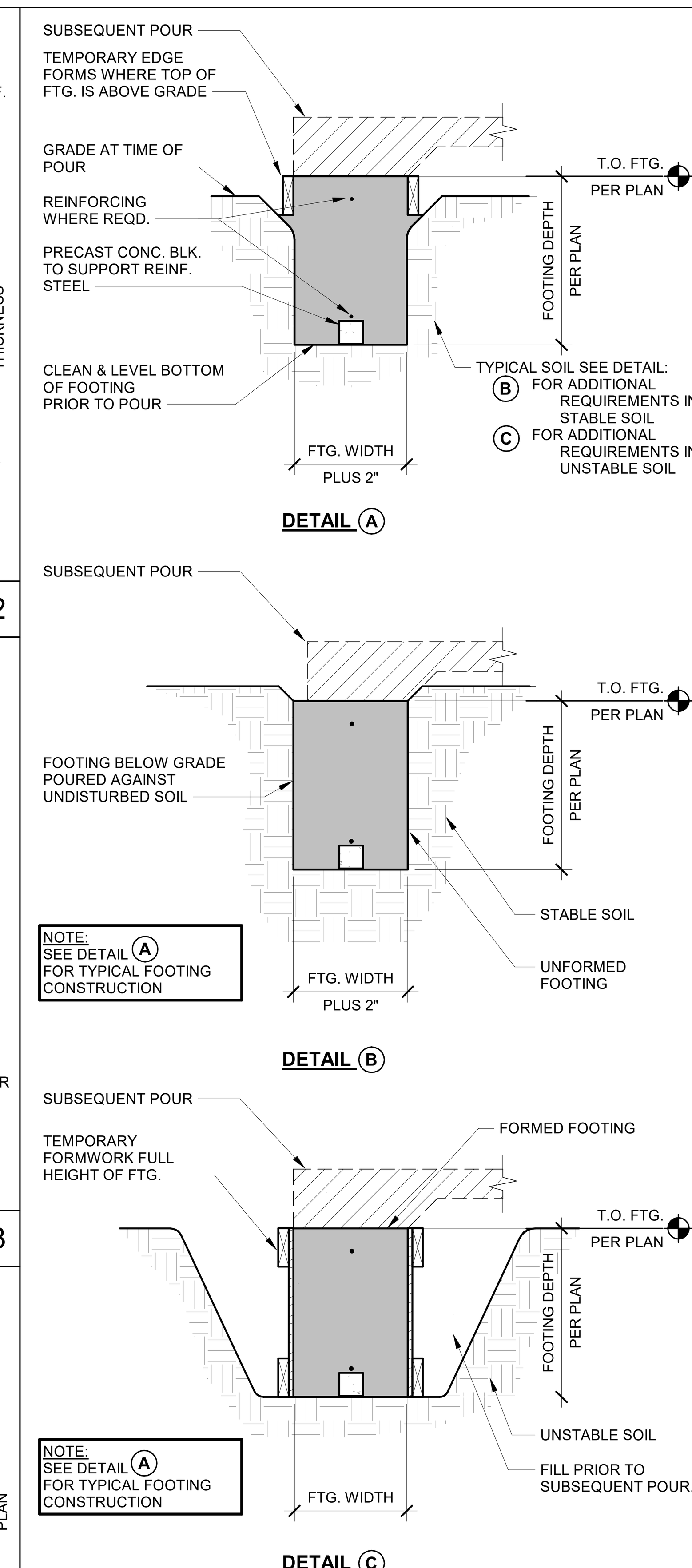

NOTES:
1. ALL FOOTINGS SHALL BE PLACED PER THE TYPICAL REQUIREMENTS OF DETAIL (A)
2. FOOTINGS MAY BE POURED DIRECTLY INTO NEAT EXCAVATIONS PER DETAIL (B) WHERE SOIL IS CONSIDERED STABLE AS DETERMINED BY THE SOIL ENGINEER.
3. PROVIDE FORMWORK PER DETAIL (C) WHERE SOIL IS CONSIDERED UNSTABLE AS DETERMINED BY THE SOIL ENGINEER.
4. STAKES ARE NOT PERMITTED WITHIN THE FOOTING SECTION.
5. SEE THE GEOTECHNICAL REPORT FOR ADDITIONAL REQUIREMENTS.

FOUNDATION FORMWORK — N.T.S. 9

BAR SIZE "db"	D	DIMENSIONS OF STANDARD HOOKS ALL GRADES 180° A or G	180° J	90° A or G
#3	2 1/4"	5"	3"	6"
#4	3"	6"	4"	8"
#5	3 3/4"	7"	5"	10"
#6	4 1/2"	8"	6"	1'-0"
#7	5 1/4"	10"	7"	1'-2"
#8	6"	11"	8"	1'-4"
#9	9 1/2"	1'-3"	11 3/4"	1'7"
#10	10 3/4"	1'-5"	1'-1 1/4"	1'-10"
#11	12"	1'-7"	1'-2 3/4"	2'-0"

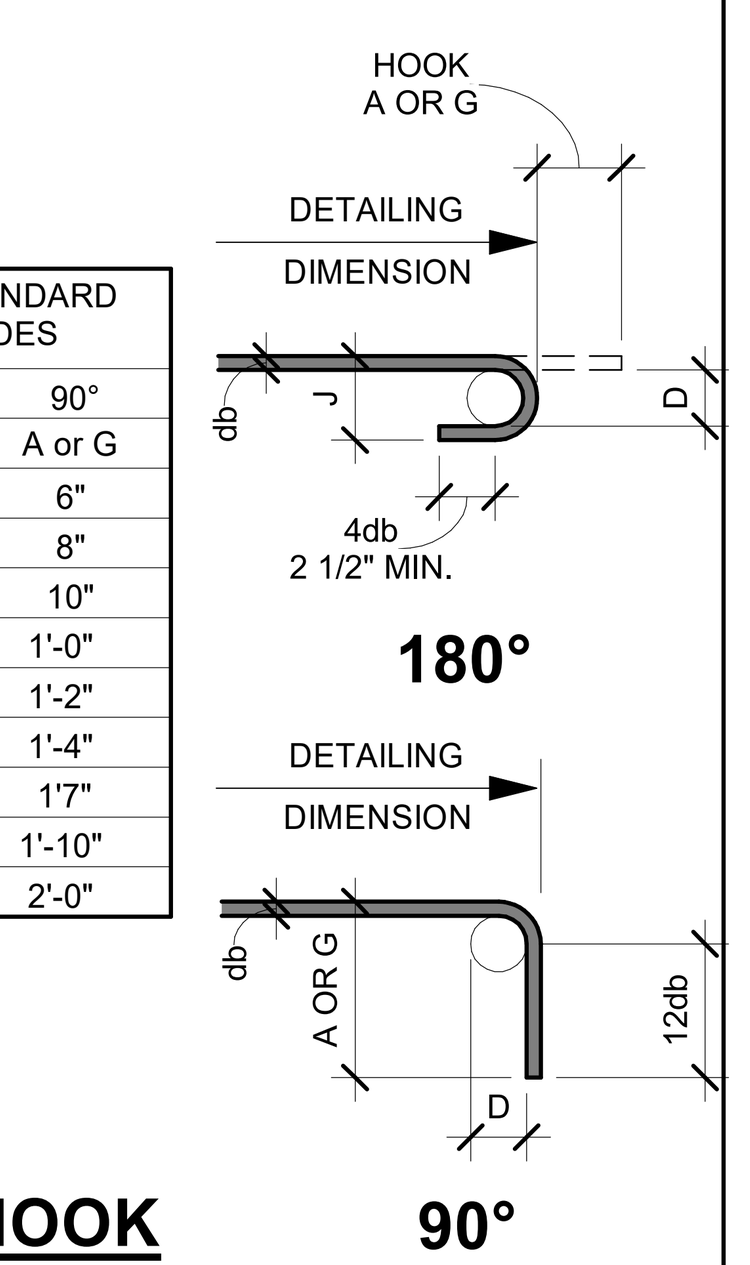

STANDARD HOOK

BAR SIZE	D "db"	135° SEISMIC HOOK A or G	APPROX. H
#3	1 1/2"	5"	3 3/4"
#4	2"	5 1/2"	4"
#5	2 1/2"	6"	4 1/4"

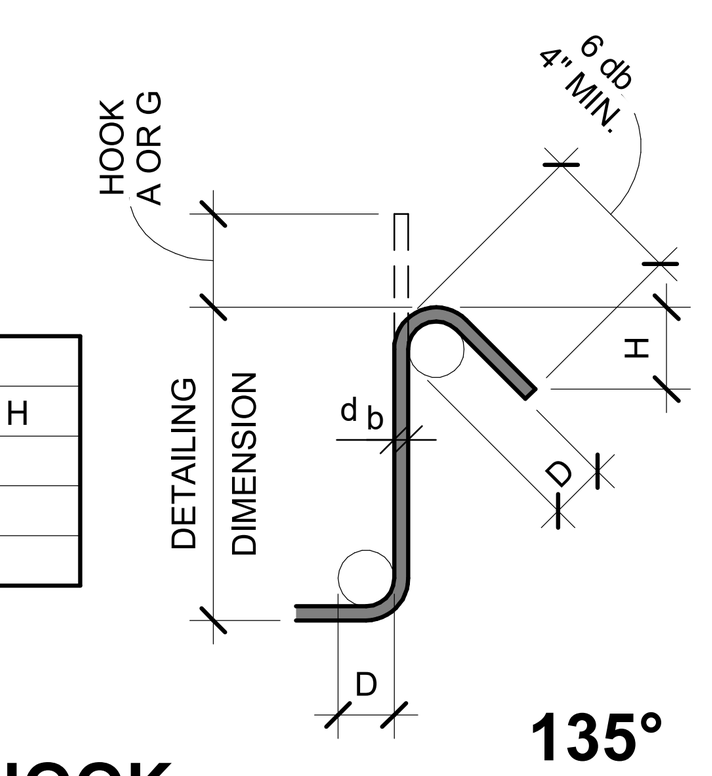

STIRRUP w/ HOOK

NOTES:
1. 135-DEG COLUMN TIE HOOKS MAY NOT BE BENT TO LESS DIAMETER OF COLUMN VERTICAL BAR ENCLOSED IN HOOK.
2. INSIDE DIAMETER OF BENDS IN WELDED WIRE FABRIC, PLAIN OR DEFORMED, FOR STIRRUPS AND TIES SHALL BE AT LEAST FOUR WIRE DIAMETERS FOR WIRE LARGER THAN D6 OR W6 AND TWO WIRE DIAMETERS FOR ALL OTHER WIRES. BENDS WITH INSIDE DIAMETER OF LESS THAN EIGHT WIRE DIAMETER SHALL BE LESS THAN FOUR DIAMETERS FROM THE NEAREST WELD INTERSECTION.

HOOK AND STIRRUP — N.T.S. 3

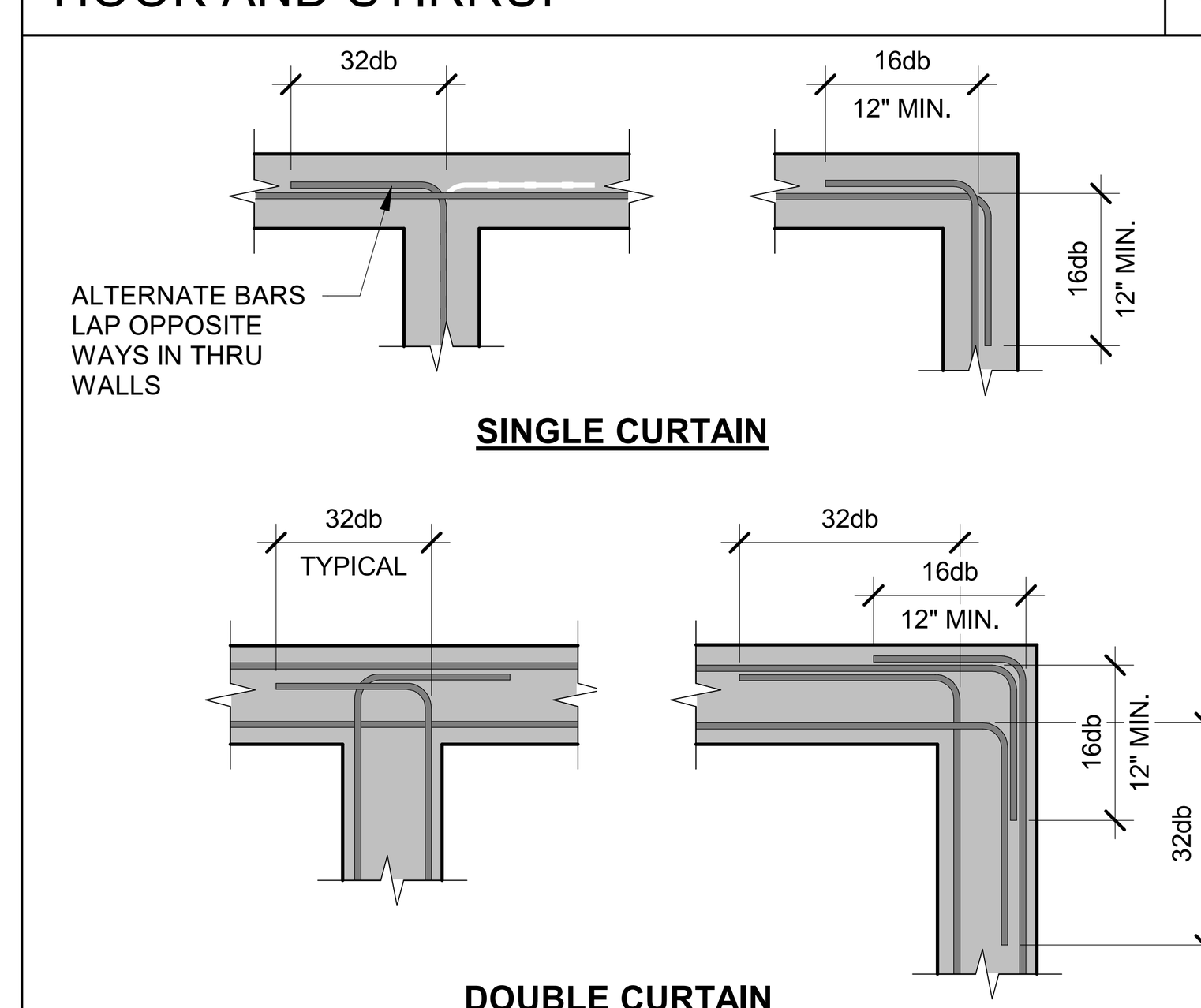

REINF. @ FOOTING INTERSECTION — N.T.S. 4

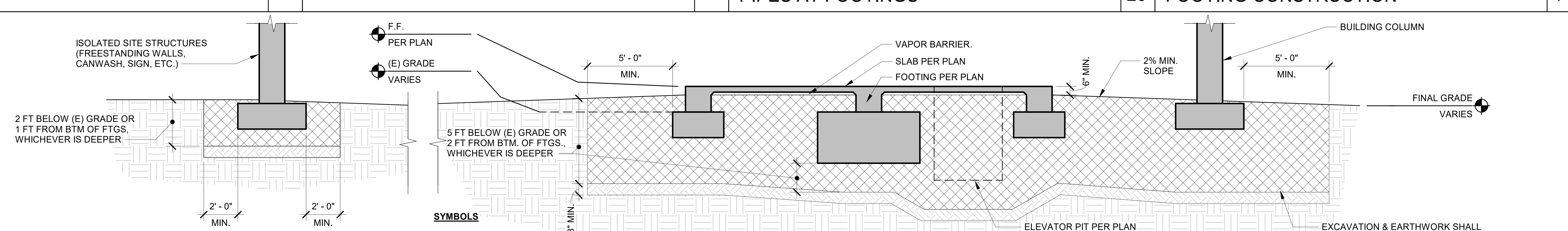

SYMBOLS

- NATIVE SOIL.
- SCARIFY MINIMUM 8 INCHES, MOISTURE CONDITION AND COMPACT TO 90% OF THE MAXIMUM DRY DENSITY.
- SLAB SUBGRADE SHALL BE SUPPORTED ON RECOMPACTED SOILS OR ENGINEERED FILL AS DESCRIBED IN THE GEOTECHNICAL INVESTIGATION. SLAB SUBGRADE SHALL BE AT OPTIMUM MOISTURE AND 90% RELATIVE COMPACTION.
- CONCRETE FOUNDATION

NOTE: VERIFY EXISTING GRADE, FINISHED FLOOR AND FINAL GRADE ELEVATIONS WITH CIVIL AND/OR FOUNDATION PLANS. VERIFY GEOTECHNICAL RECOMMENDATIONS WITH REPORT NUMBER LISTED IN S000 GENERAL NOTES.

SOIL PREPARATION AT FOUNDATIONS & FLOOR SLABS — N.T.S. 15

NOTE: SEE 12/S002.2 FOR STEPPED FTG. TRANSITION @ IN-LINE FTGS.

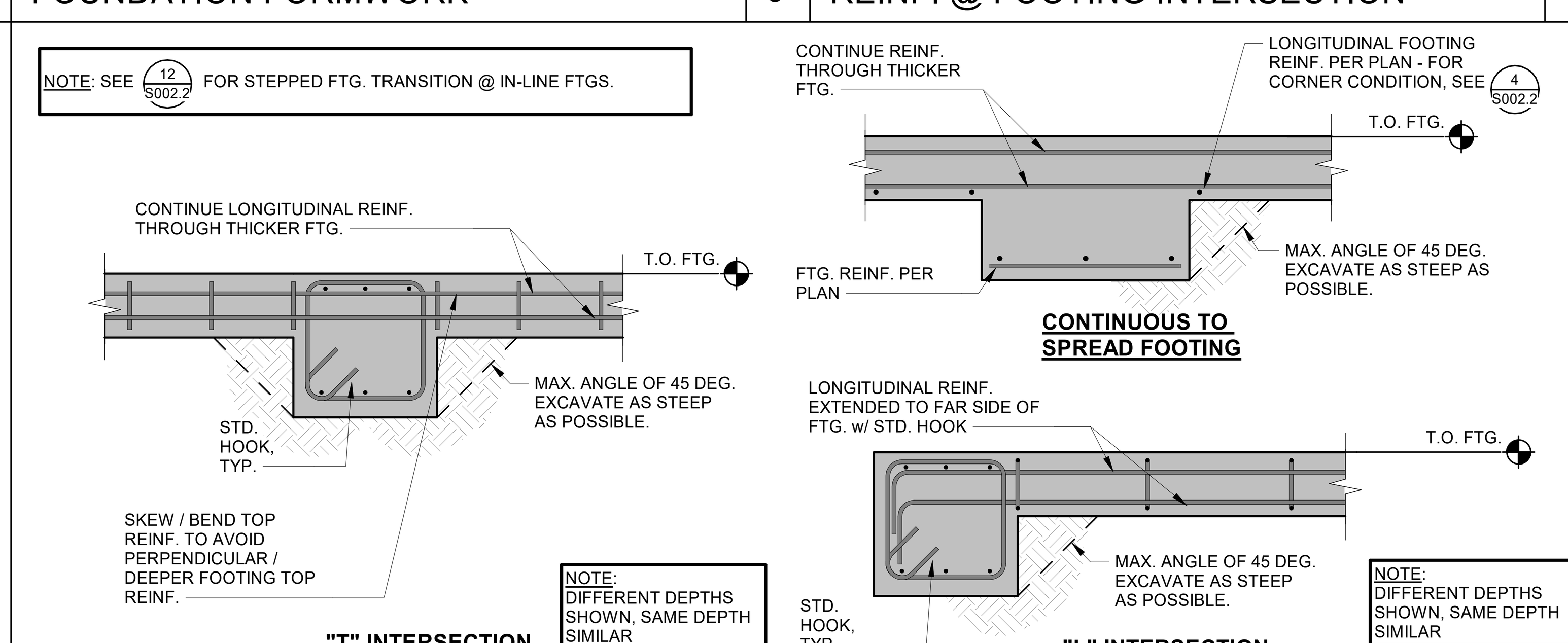

REINF. @ ADJACENT FTG. — N.T.S. 5

IDENTIFICATION STAMP
DIV. OF THE STATE ARCHITECT
APP: 02-122821 INC: 2
REVIEWED FOR
SS ☑ FLS ☑ ACS ☑
DATE: 11/20/2025

Teter, Inc. expressly reserves its common law copyright and other property rights in these plans. This document, the ideas and designs incorporated herein, as an instrument of professional service, is not to be used in whole or in part, for any other project without prior written authorization.

MARK	DATE	DESCRIPTION
A	11/13/2025	DSA BACKCHECK

REGISTERED PROFESSIONAL ENGINEER ERIC S. BAILEY No. S5609 STRUCTURAL STATE OF CALIFORNIA 11/12/25

TETER, INC.
FRESNO HEADQUARTERS
VISALIA | BAKERSFIELD | MODESTO | SAN LUIS OBISPO
ARCHITECTS ENGINEERS CONNECTED

VISALIA CAMPUS UNIVERSITY CENTER
COLLEGE OF THE SEQUOIAS
915 S. MOONEY BLVD
VISALIA, CALIFORNIA

DRAWING TITLE
TYPICAL DETAILS - FOUNDATION

PROJECT NO.
22-12498

DRAWING
S002.2

PLOT DATE: 11/12/2025 7:23:20 PM

\\tetr-file1\Users\luis.valtierra\Documents\12498-S-UC_luis.valtierra.rvt

IDENTIFICATION STAMP
DIV. OF THE STATE ARCHITECT
APP: 02-122821 INC: 2
REVIEWED FOR
SS ☑ FLS ☑ ACS ☑
DATE: 11/20/2025

Teter, Inc. expressly reserves its common law copyright and other property rights in these plans. This document, the ideas and designs incorporated herein, as an instrument of professional service, is not to be used in whole or part, for any other project without prior written authorization.

MARK	DATE	DESCRIPTION
A	11/13/2025	DSA BACKCHECK

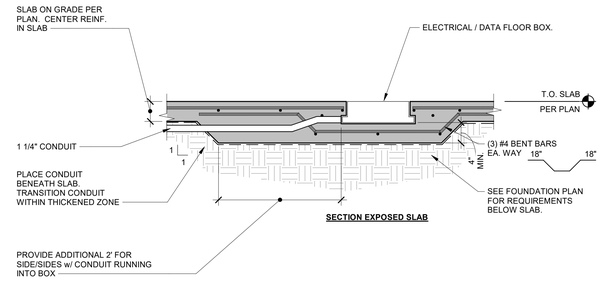

SECTION EXPOSED SLAB

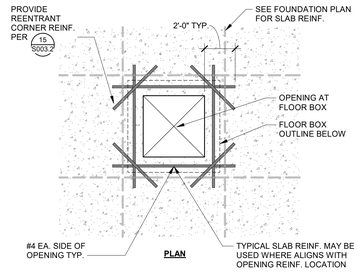

PLAN

FLOOR BOX AT SLAB ON GRADE N.T.S. 12

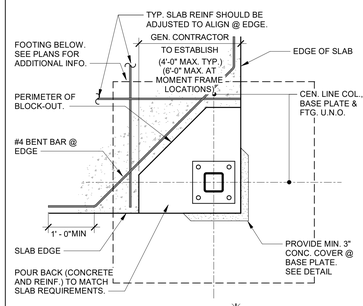

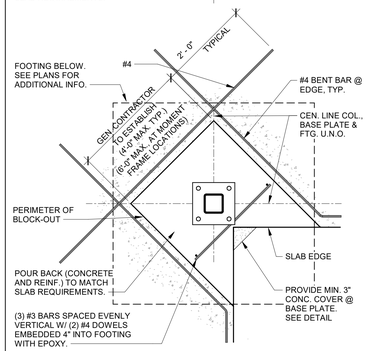

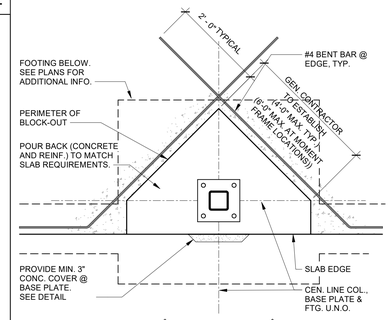

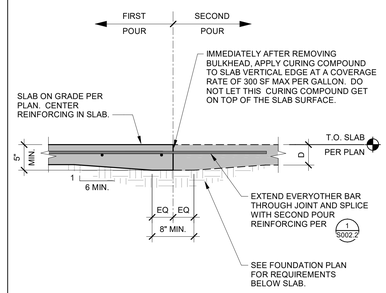

SLAB CONSTRUCTION JOINT N.T.S. 1

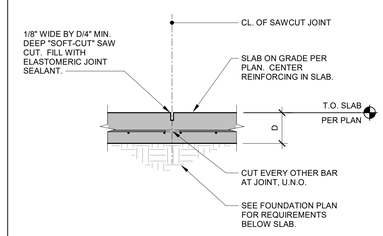

SLAB SAWCUT JOINT N.T.S. 2

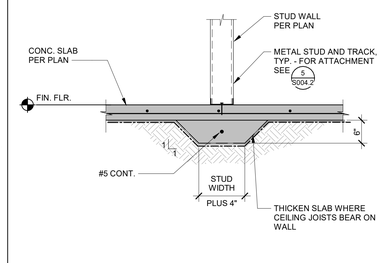

INT. NON-BEARING WALL N.T.S. 3

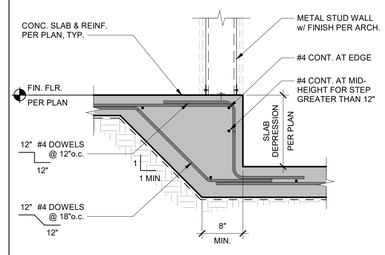

SLAB DEPRESSION N.T.S. 14

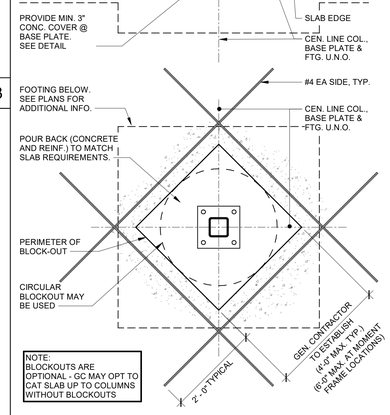

SLAB BLOCKOUT N.T.S. 9

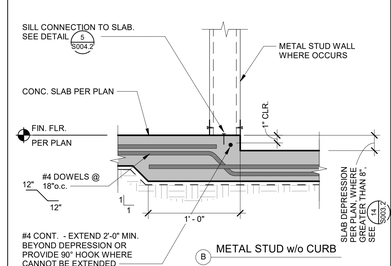

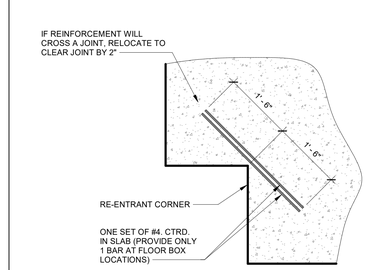

RE-ENTRANT CORNER N.T.S. 15

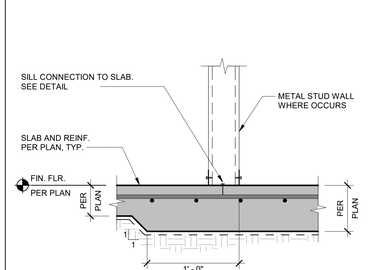

SLAB TRANSITION N.T.S. 10

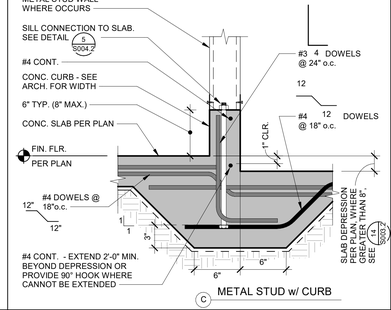

SLAB DEPRESSION N.T.S. 5

TETER, INC.
FRESNO HEADQUARTERS
VISALIA | BAKERSFIELD | MODESTO | SAN LUIS OBISPO
ARCHITECTS ENGINEERS CONNECTED

VISALIA CAMPUS UNIVERSITY CENTER
COLLEGE OF THE SEQUOIAS
915 S. MOONEY BLVD
VISALIA, CALIFORNIA

DRAWING TITLE
TYPICAL DETAILS - FOUNDATION

PROJECT NO.
22-12498

DRAWING
S003.2

PLOT DATE: 11/12/2025 7:23:24 PM

\\tetr-file1\Users\luis.valtierra\Documents\12498-S-UC_luis.valtierra.rvt

WALL FRAMING SCHEDULE (14)

	WALL TYPE		WALL HEIGHT	WALL STUDS	OPENING WIDTH	BOX HEADER (15) DBL. JOIST	BOX HEADER (15) TRACK	JAMB STUDS DOUBLE	JAMB STUDS SINGLE	OPENING SILL TRACK	NO. #10 SMS AT HEADER HANGER
EXTERIOR	"A"	8" STUD	FIN. FLR. TO 2ND FLR. HT. (17'-0")	800S162-43 @ 16" o.c.	0'-0" TO 6'-0"	800S162-54	800T125-43	(2) 800S162-43	800S250-68	800T125-43	(8)
					6'-1" TO 12'-0"	800S250-68	8600T125-54	(2) 800S200-54	800S250-97	800T125-54	(16)
	"A2"	8" STUD	FIN. FLR. TO 2ND FLR. HT. (22'-0")	800S162-54 @ 16" o.c.	0'-0" TO 6'-0"	800S162-54	800T125-43	(2) 800S162-54	800S250-68	800T125-43	(8)
					6'-1" TO 12'-0"	800S250-68	8600T125-54	(2) 800S200-68	800S250-97	800T125-54	(16)
	"B"	8" STUD	2ND FLR. TO ROOF HT. + "H"	800S162-54 @ 16" o.c.	0'-0" TO 6'-0"	800S162-54	800T125-43	(2) 800S162-43	800S200-54	800T125-43	(8)
	"C"	8" STUD	2ND FLR. TO ROOF HT. + "H"	800S250-68 @ 16" o.c.	0'-0" TO 6'-0"	800S250-68	800T125-54	(2) 800S200-54	800S250-97	800T125-43	(8)
	"D"	8" STUD	AT ROOF**	800S162-43 @ 16" o.c.	----	----	----	----	----	----	----
					----	----	----	----	----	----	----
INTERIOR	0'-0" TO 16'-0"	4" STUD	0'-0" TO 16'-0"	400S200-33 @ 16" o.c.	0'-0" TO 6'-0"	400S200-33	400T125-33	(2) 400S200-43	---	(8)	
		6" STUD		600S162-33 @ 16" o.c.		600S162-33	600T125-33	(2) 600S162-33	600T125-33	(8)	
					6'-1" TO 12'-0"	600S162-33	600T125-33	(2) 600S162-33	600T125-33	(12)	
		8" STUD	FULL HEIGHT*	800S162-43 @ 16" o.c.	0'-0" TO 6'-0"	600S162-43	800T125-43	800T125-43	800T125-43	(8)	

*SEE WALL ELEVATION 2/S410.2

**SEE ROOF FRAMING DETAIL 16/S700.2

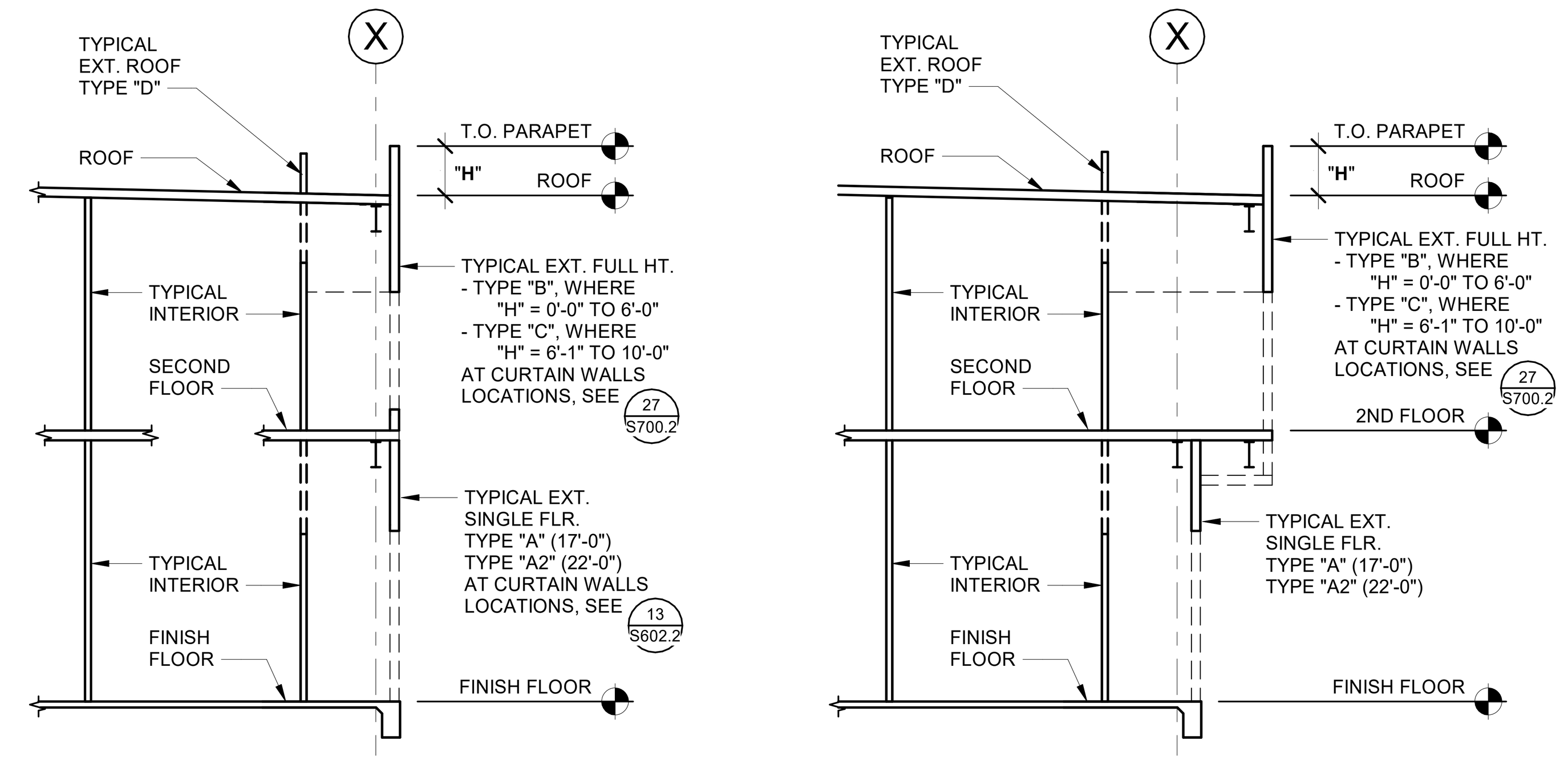

A **TYPICAL WALL SECTIONS**

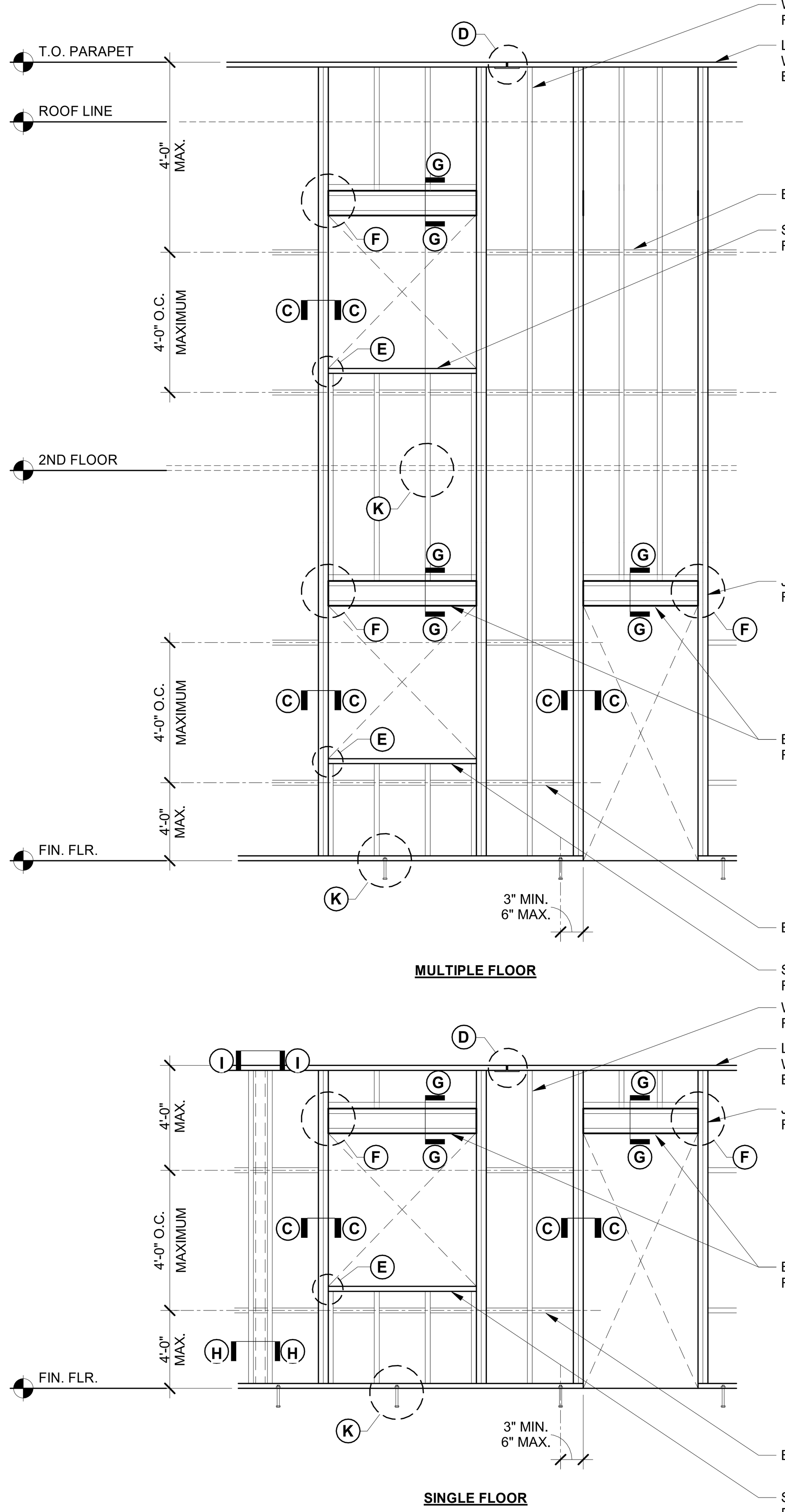

B **TYPICAL WALL ELEVATION**

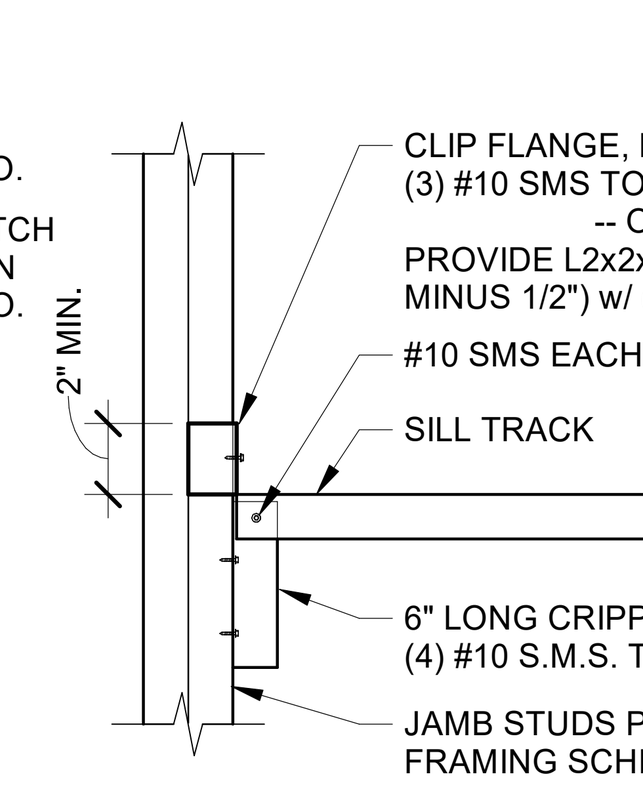

E **SILL CONNECTION**

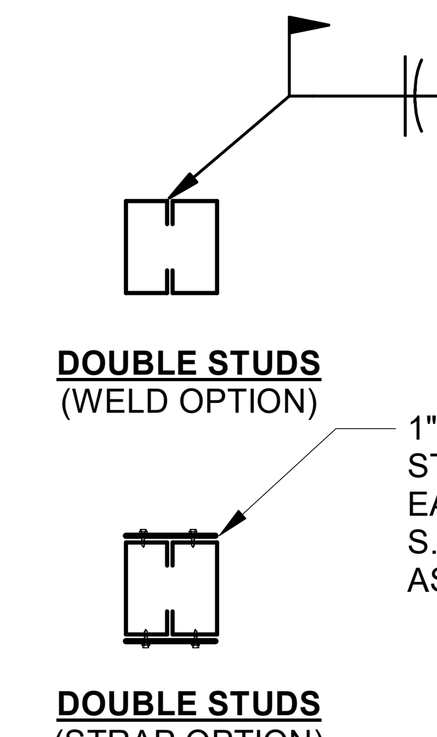

C **JAMB STUDS**

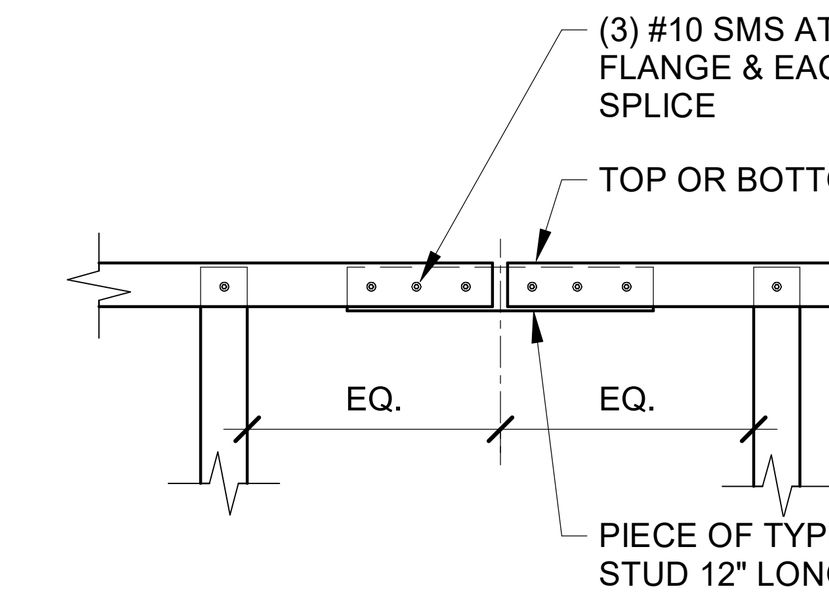

D **TRACK SPLICE**

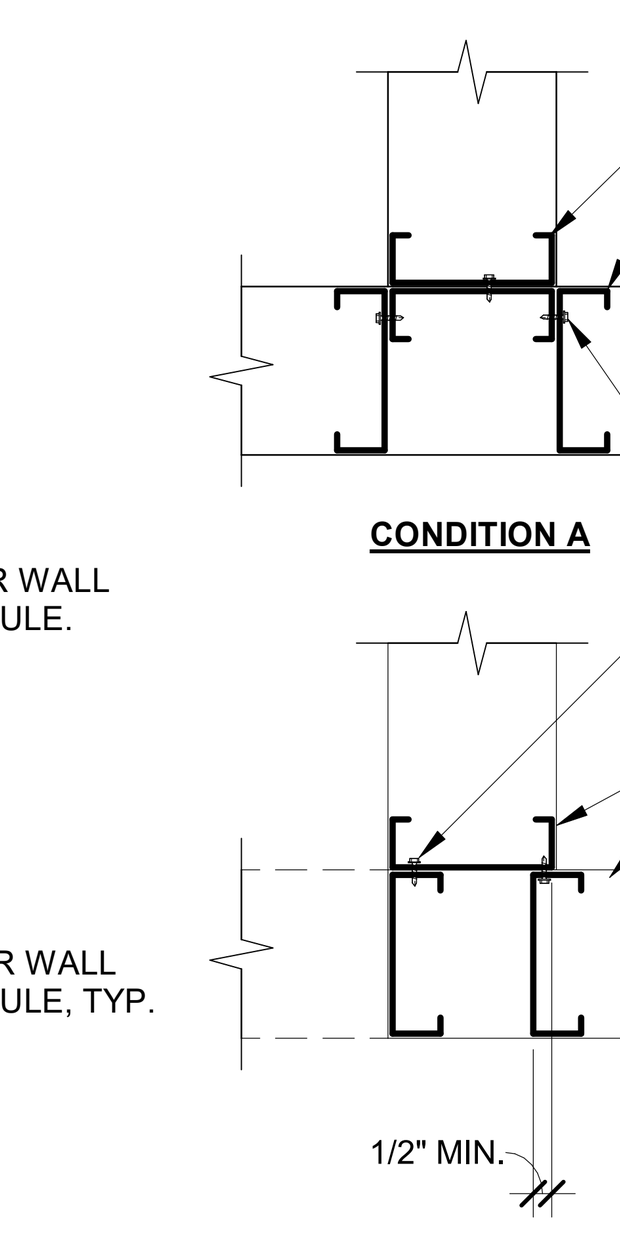

H **CORNER FRAMING**

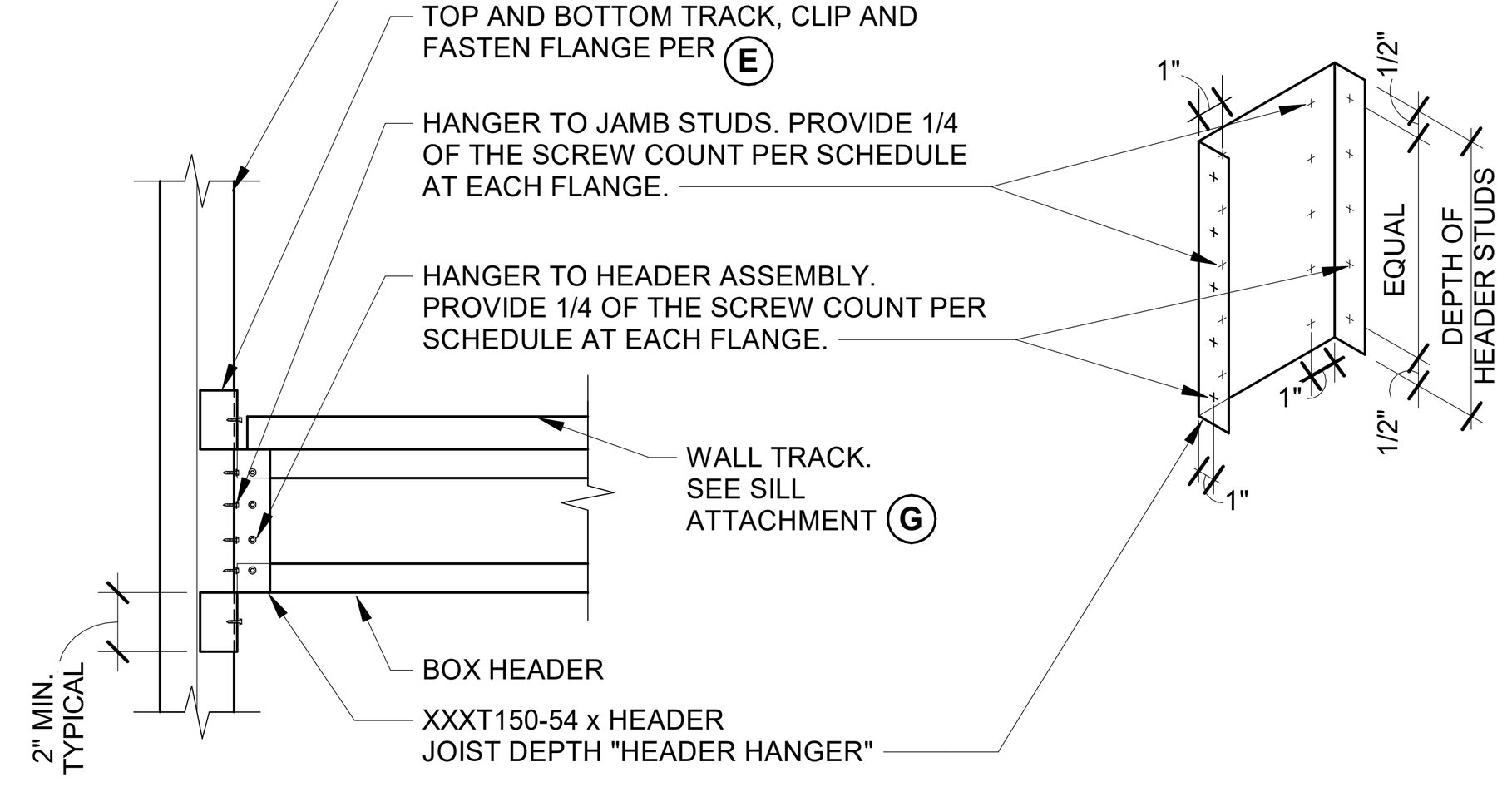

F **HEADER CONNECTION**

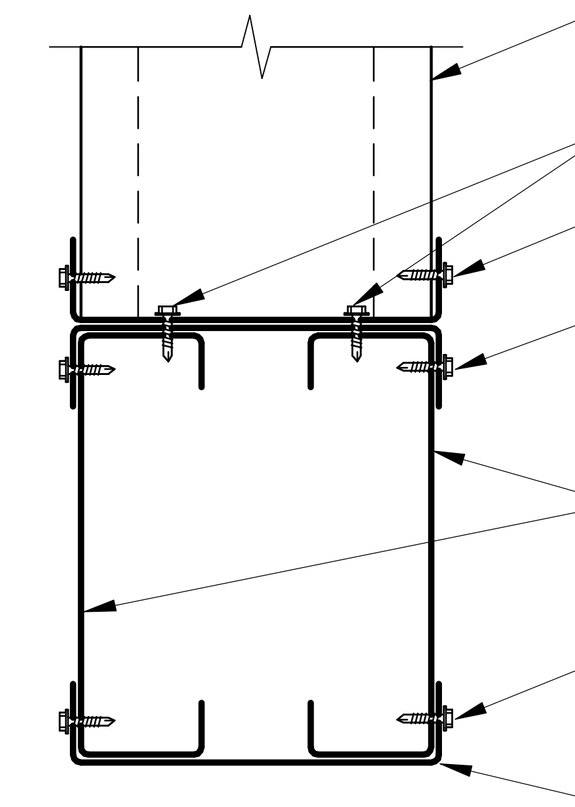

G **BOX HEADER**

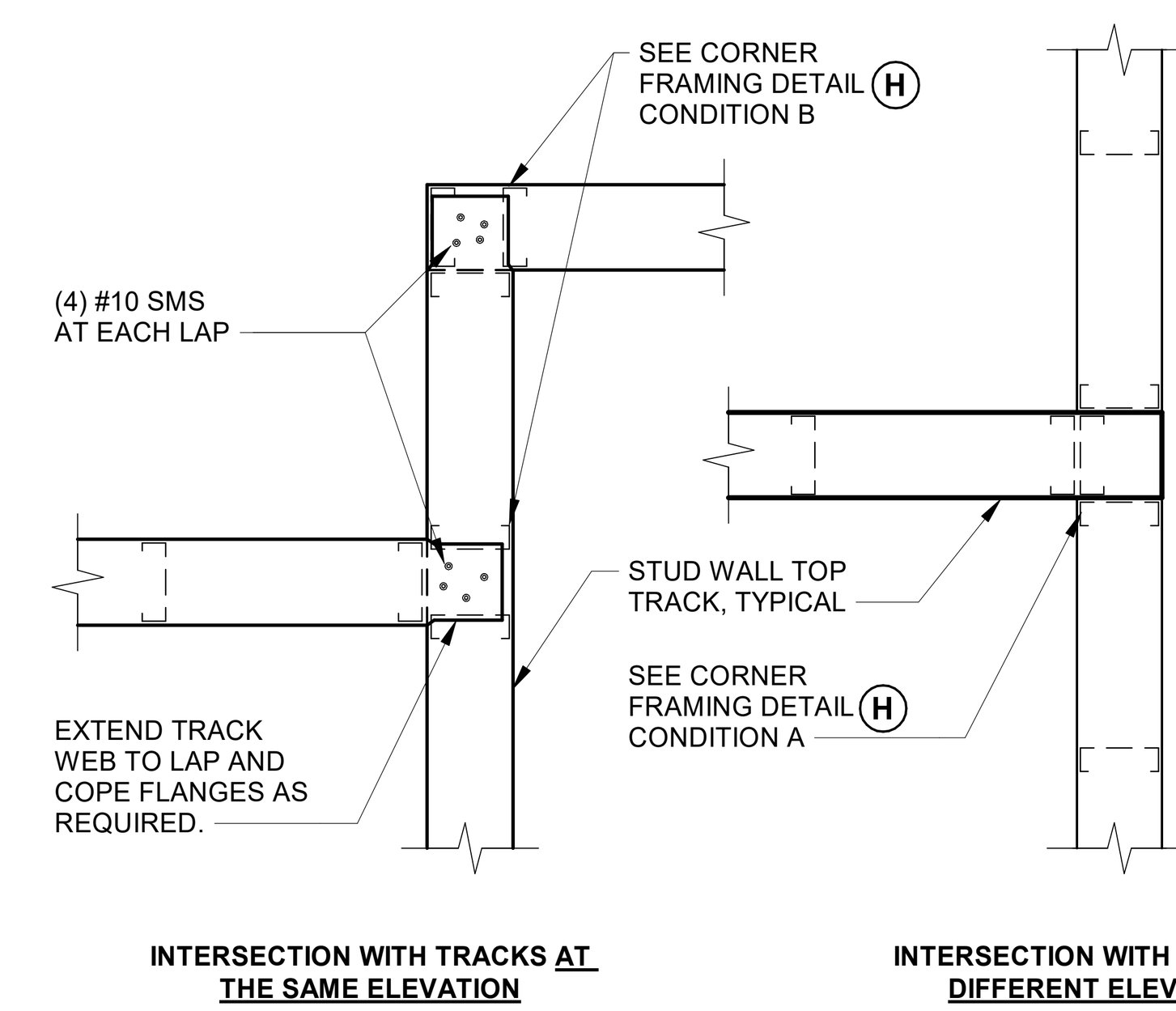

I **TOP TRACK INTERSECTION**

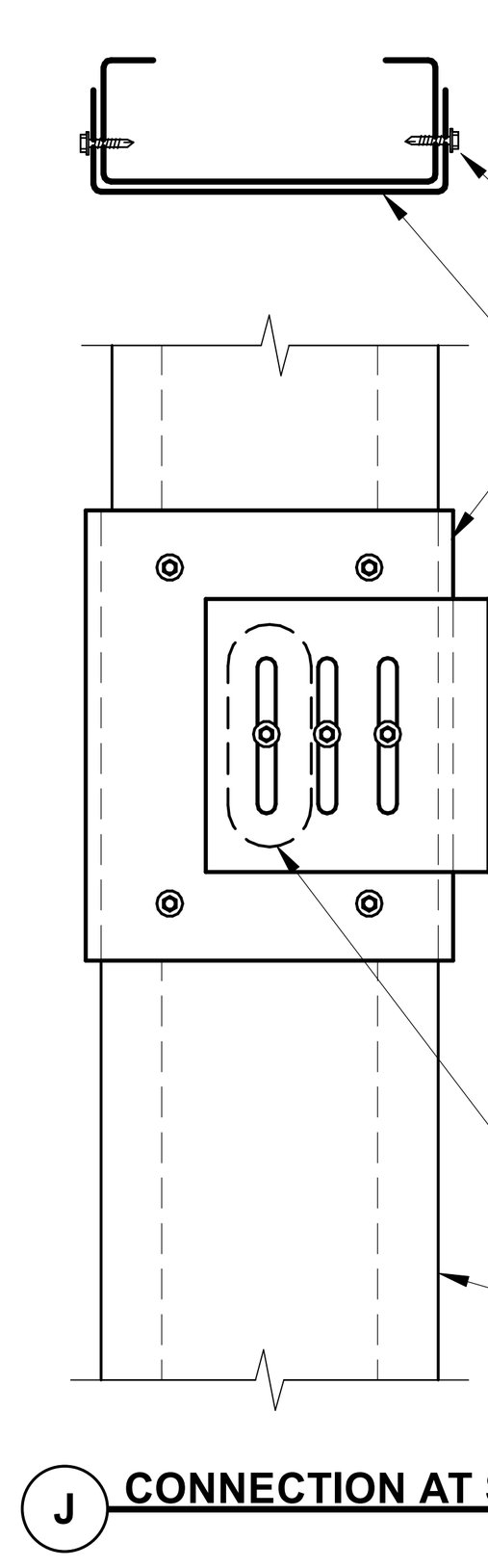

J **CONNECTION AT STUD PUNCH-OUT**

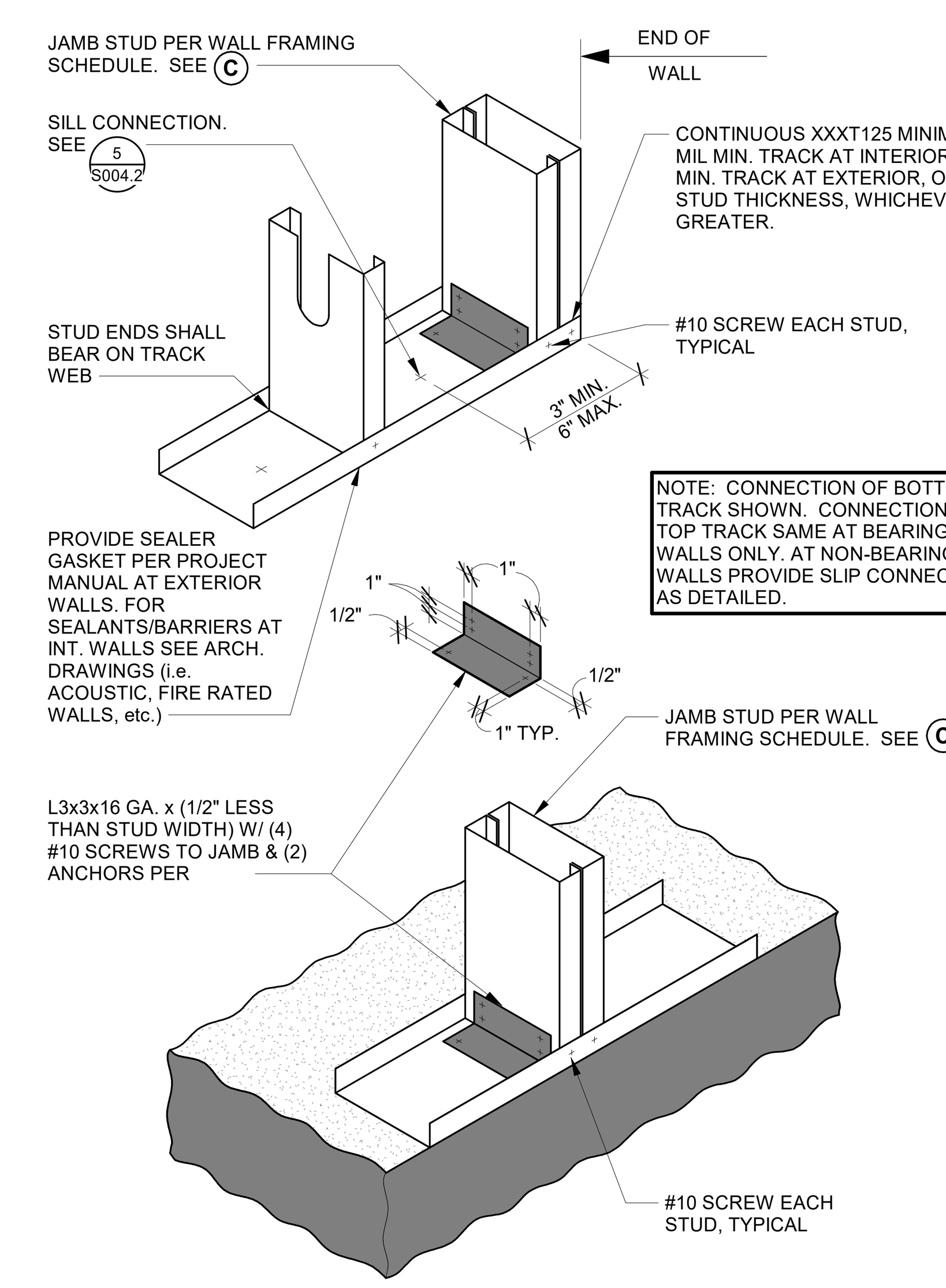

K **SILL ATTACHMENT AT CONCRETE**

NOTES:

1. ALL BEARING & NON-BEARING METAL STUD WALLS SHALL BE PER WALL FRAMING SCHEDULE UNLESS NOTED OTHERWISE. FOR WALL TYPE AND LOCATION SEE ARCHITECTURAL DRAWINGS.
2. ALL SECTION SHALL BE MANUFACTURED IN ACCORDANCE WITH THE LATEST A.I.S.I. SPECIFICATION AND MEET THE FOLLOWING THICKNESS REQUIREMENTS:

MILS/GAUGE SCHEDULE		
MILS	MINIMUM THICKNESS	GAUGE
30	0.0312"	20
33	0.0346"	20
43	0.0451"	18
54	0.0566"	16
68	0.0713"	14
97	0.1017"	12

3. BENT, KINKED, DISTORTED, OR DAMAGED SECTIONS SHALL NOT BE USED.
4. STUDS MAY HAVE FACTORY WEB PUNCHOUTS U.N.O. AT 24" O.C. ALONG CENTERLINE OF WEB WITH A MAXIMUM WIDTH = HALF THE MEMBER DEPTH (d/2) OR 2 1/2" WHICHEVER IS LESS, AND A MAXIMUM LENGTH = 4 1/2". PUNCHOUTS SHALL NOT BE CLOSER THAN 10" FROM SECTION ENDS. SEE ARCHITECTURAL DRAWINGS FOR UNPNCHED STUD REQUIREMENTS AT ACOUSTICAL WALLS.
5. SECTION PROPERTIES ARE BASED UPON THE "STEEL STUD MANUFACTURERS ASSOCATION" (SSMA) CATALOG OF PARTICIPATING PRODUCERS. (**ESR-3064P**)
6. ALL STUDS AND JAMBS SHALL BE FULL-HEIGHT OF BUILDING, U.N.O.
7. FOR SIZES OF OPENINGS AND ELEVATION TO BOTTOM/TOP OF OPENINGS, SEE ARCHITECTURAL PLANS
8. ALL JAMBS, HEADERS AND WINDOW SILLS SHALL BE AS NOTED IN SCHEDULE.
9. PROVIDE BRIDGING PER DETAIL 3/S005.2
10. ALL PARAPETS SHALL BE CAPPED WITH A LIGHT GAUGE TRACK MATCHING STUD GAUGE AND THICKNESS.
11. WHERE NON-BEARING WALLS EXTEND TO STRUCTURE, SEE 5/S005.2
12. ALL WELDS SHALL BE 1/8" FILLET MAXIMUM. FOR MATERIALS THINNER THAN 0.15", EFFECTIVE THROAT SHALL NOT BE LESS THAN THINNEST MATERIAL. WELD IN ACCORDANCE WITH "STRUCTURAL WELDING CODE - SHEET METAL" AWS D1.3.
13. SCREWS SHALL BE THREAD-FORMING OR THREAD-CUTTING, WITH OR WITHOUT A SELF DRILLING POINT. SCREWS SHALL BE INSTALLED AND TIGHTENED IN ACCORDANCE WITH THE MANUFACTURER'S RECOMMMENDATION. MINIMUM SPACING IS THREE SCREW DIAMETERS. A MINIMUM OF (3) THREADS SHALL BE ENGAGED.
14. USE LOW PROFILE HEAD SCREWS AT ALL LOCATIONS THAT HAVE GYPSUM BOARD FINISH.
15. USE UNPUNCHED STUDS FOR ALL BOX HEADERS AND JAMB STUDS.
16. WALL STUDS LISTED IN THE WALL FRAMING SCHEDULE SHALL BE USED, UNLESS NOTED OTHERWISE. SEE PLANS AND SPECIFIC DEATILS FOR ADDITIONAL REQUIREMENTS.

TYPICAL METAL STUD WALL FRAMING — N.T.S. 4

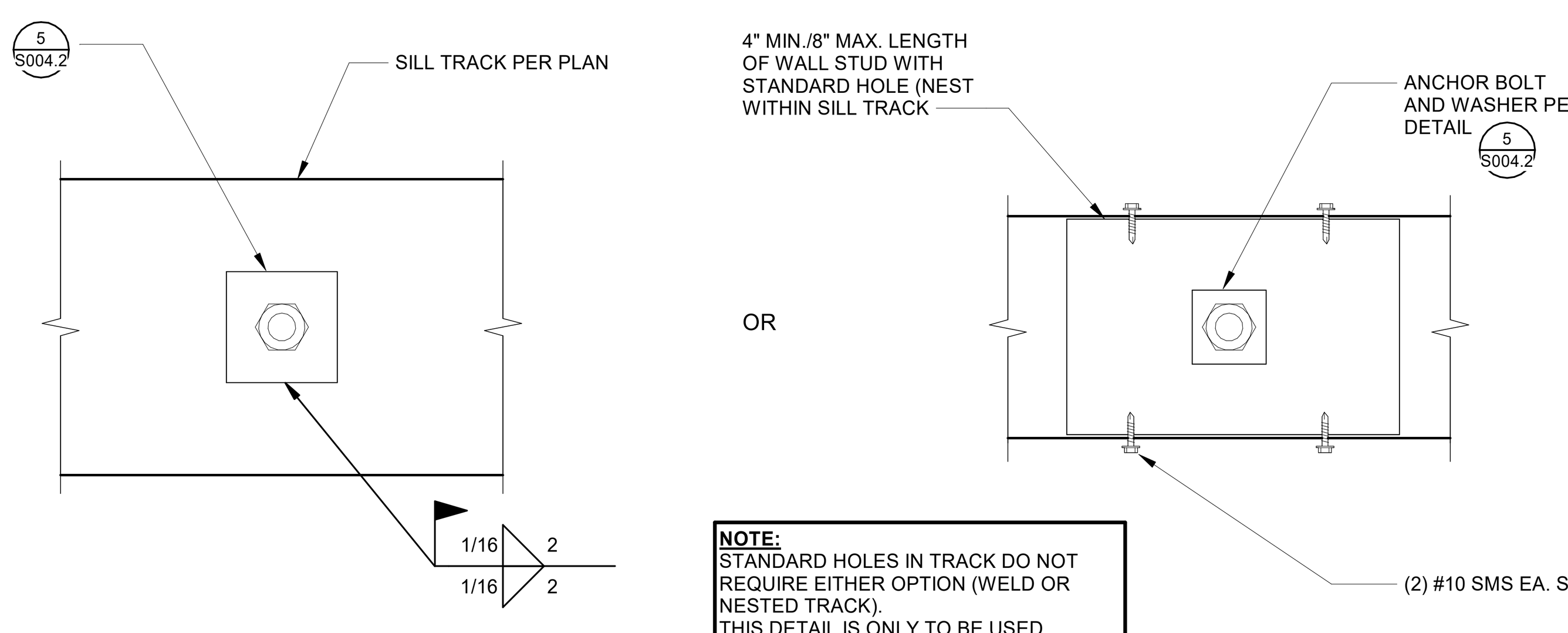

NOTE:
STANDARD HOLES IN TRACK DO NOT REQUIRE EITHER OPTION (WELD OR NESTED TRACK).
THIS DETAIL IS ONLY TO BE USED WHERE HOLES ARE DEFORMED, OVERSIZED, OBLONG, SLOTTED, ETC.

DETAIL — N.T.S. 25

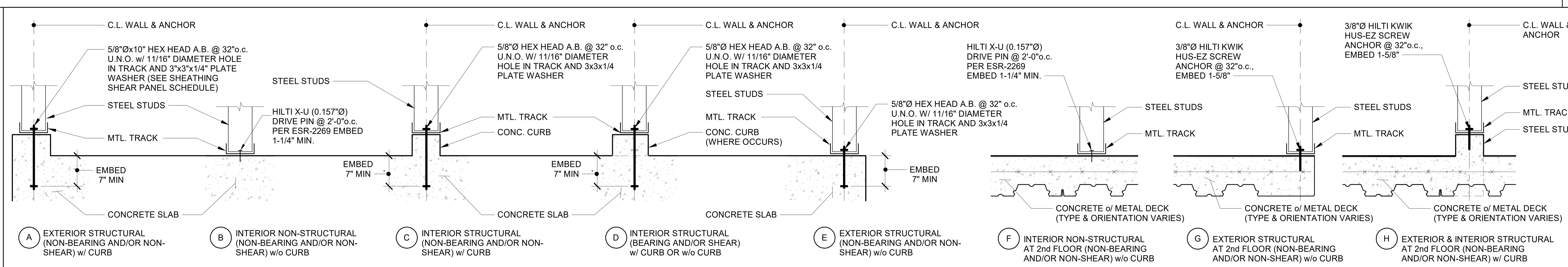

NOTE:
1. WHERE HOLES IN TRACK ARE OVER SIZED OR SLOTTED, SEE 25/S004.2
2. PROVIDE SEALER GASKET PER PROJECT MANUAL AT EXTERIOR WALLS. FOR SEALANTS/BARRIERS AT INTERIOR WALLS, SEE ARCH. DWGS. (i.e. ACOUSTIC, FIRE RATED WALLS, etc.)
3. AT CONTRACTOR'S OPTION, PROVIDE 5/8"Ø THREADED ROD EPOXY ANCHOR WITH 5" MINIMUM EMBEDMENT FROM FINISH FLOOR. EPOXY SHALL BE HILTI HIT-RE 500-V3 (ICC ESR-3814) (TEST 1,700#).

METAL STUD AT SILL — N.T.S. 5

PLOT DATE: 11/12/2025 7:23:29 PM

IDENTIFICATION STAMP
DIV. OF THE STATE ARCHITECT
APP: 02-122821 INC: 2
REVIEWED FOR
SS ☑ FLS ☑ ACS ☑
DATE: 11/20/2025

Teter, Inc. expressly reserves its common law copyright and other property rights in these plans. This document, the ideas and designs incorporated herein, as an instrument of professional service, is not to be used in whole or in part, for any other project without prior written authorization.

MARK	DATE	DESCRIPTION
A	11/13/2025	DSA BACKCHECK

REGISTERED PROFESSIONAL ENGINEER — ERIC S. BAILEY — No. S5609 — STRUCTURAL — STATE OF CALIFORNIA

TETER, INC.
FRESNO HEADQUARTERS
VISALIA | BAKERSFIELD | MODESTO | SAN LUIS OBISPO
ARCHITECTS ENGINEERS CONNECTED

VISALIA CAMPUS UNIVERSITY CENTER
COLLEGE OF THE SEQUOIAS
915 S. MOONEY BLVD
VISALIA, CALIFORNIA

DRAWING TITLE
TYPICAL DETAILS - METAL STUD

PROJECT NO.
22-12498

DRAWING
S004.2

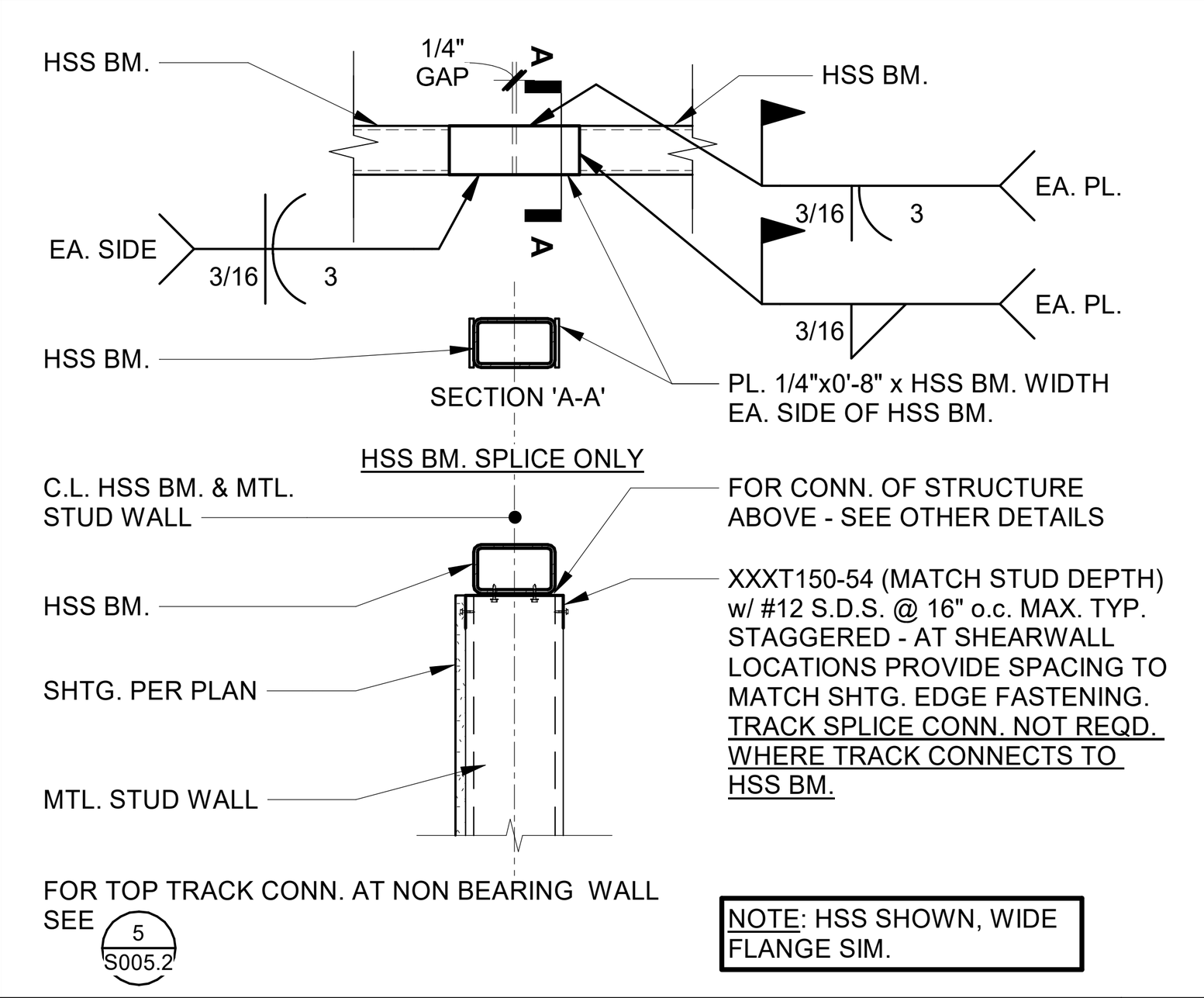

TYP. TOP TRACK TO STR STL — 1" = 1'-0" — 26

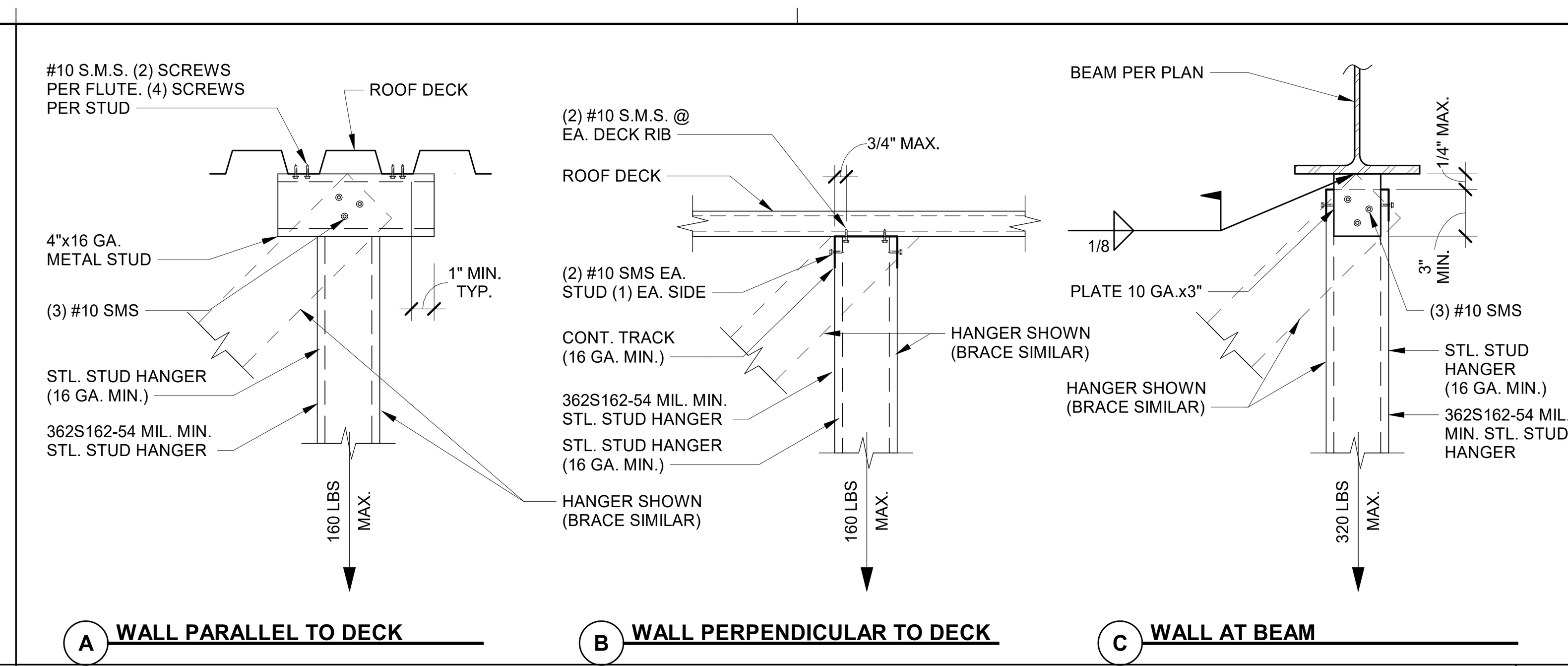

HANGER (OR BRACE) ATTACHMENT — 1 1/2" = 1'-0" — 16

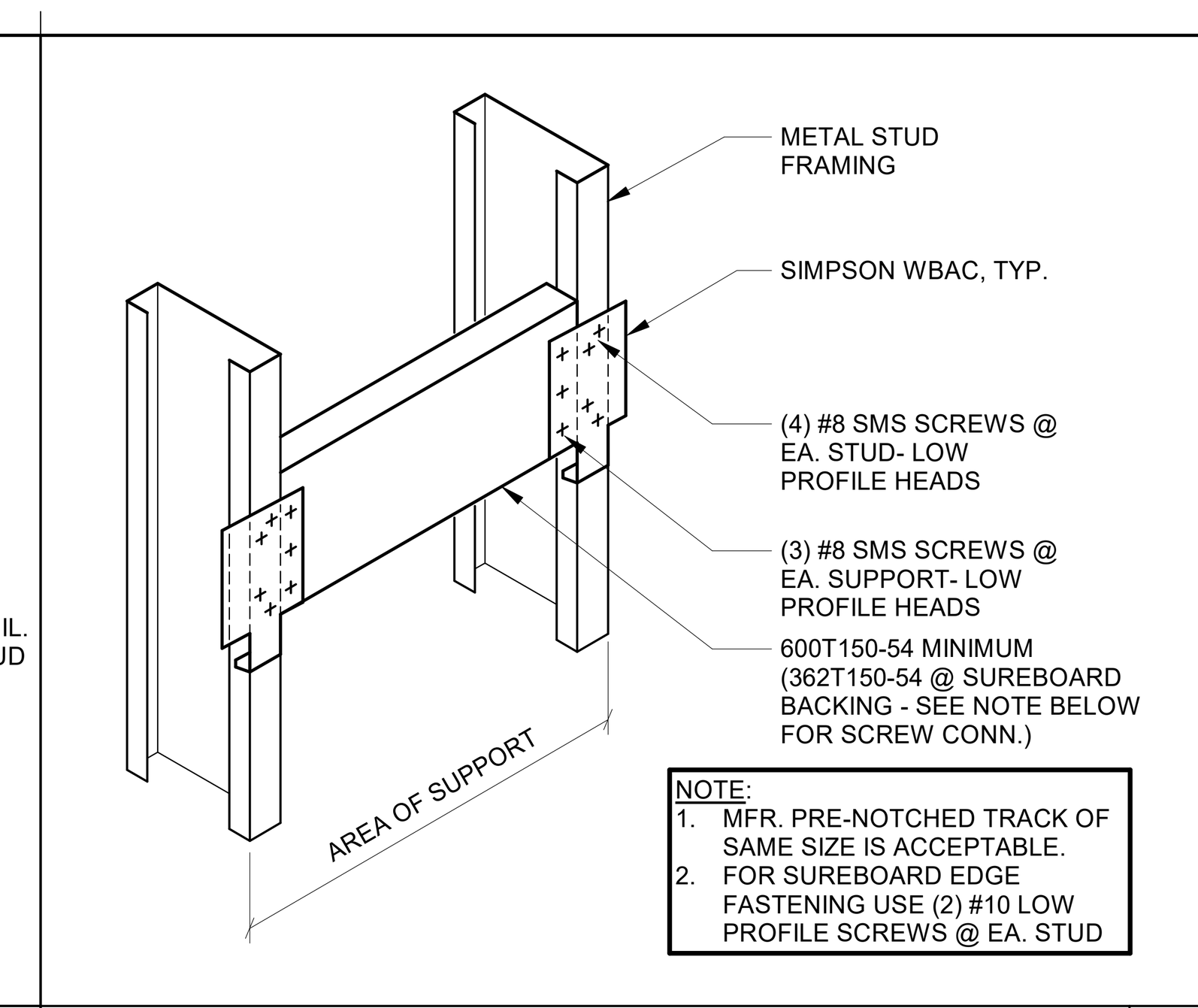

LIGHT GAUGE BACKING — 12" = 1'-0" — 11

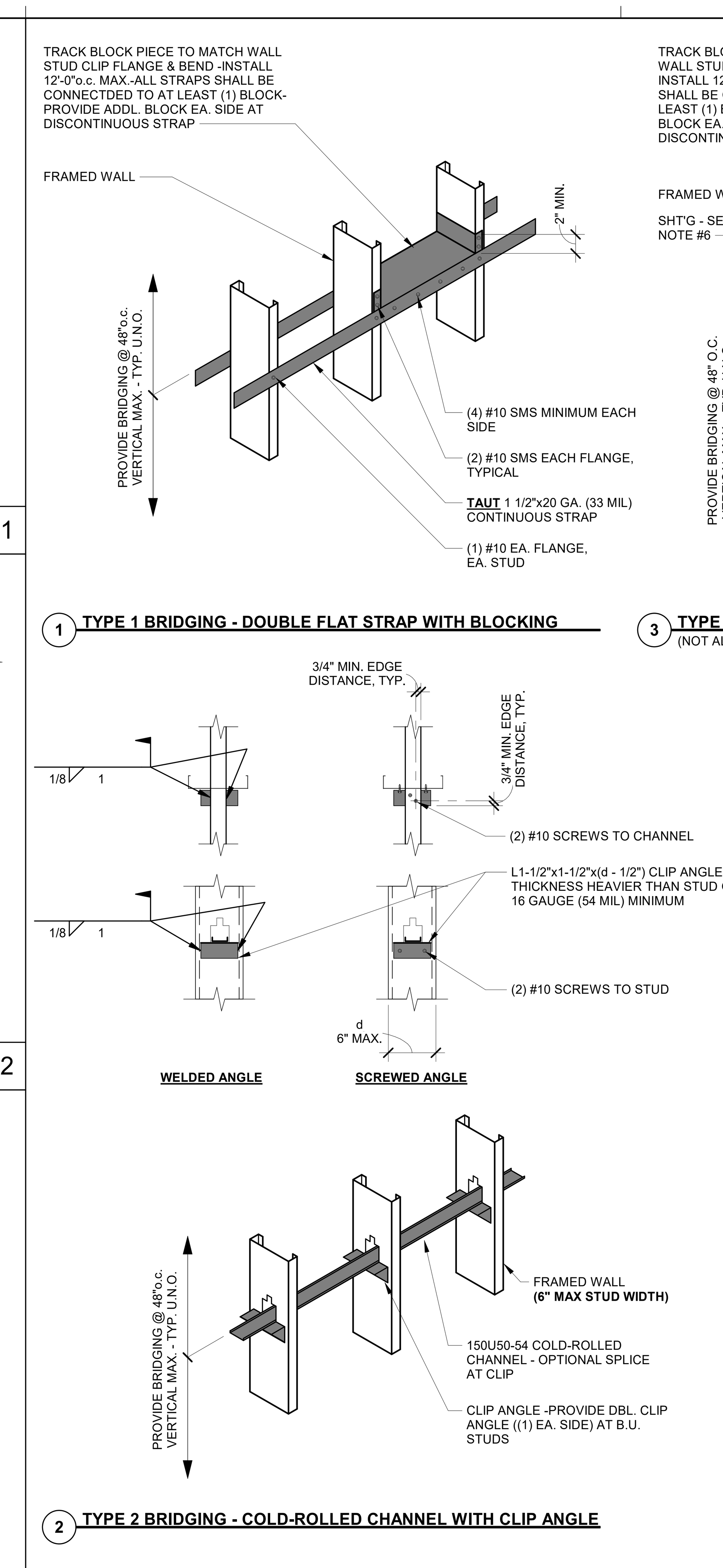

NOTES:
1. PROVIDE BRIDGING ON ALL WALL STUDS EXCEPT NON-BEARING WALLS WITH QUALIFIED SHEATHING PER NOTE #6 ON BOTH SIDES OF WALL.
2. USE ONLY TYPE 1 OR TYPE 2 BRIDGING FOR BEARING WALLS (SUPPORTING ROOFS, FLOORS, MEZZANINE, ETC.)
3. INSTALL ALL BRIDGING PRIOR TO INSTALLATION OF SUPPORTED FRAMING.
4. FOR ADDITIONAL INFORMATION SEE 5/S004.2
5. TYPE 2 BRIDGING NOT ALLOWED ON STUDS GREATER THAN 6" DEEP.
6. QUALIFIED SHEATHING SHALL BE GWB, GYPSHEATHING, PLYWOOD, OR OSB, ONLY.

STUD BRIDGING — N.T.S. — 3

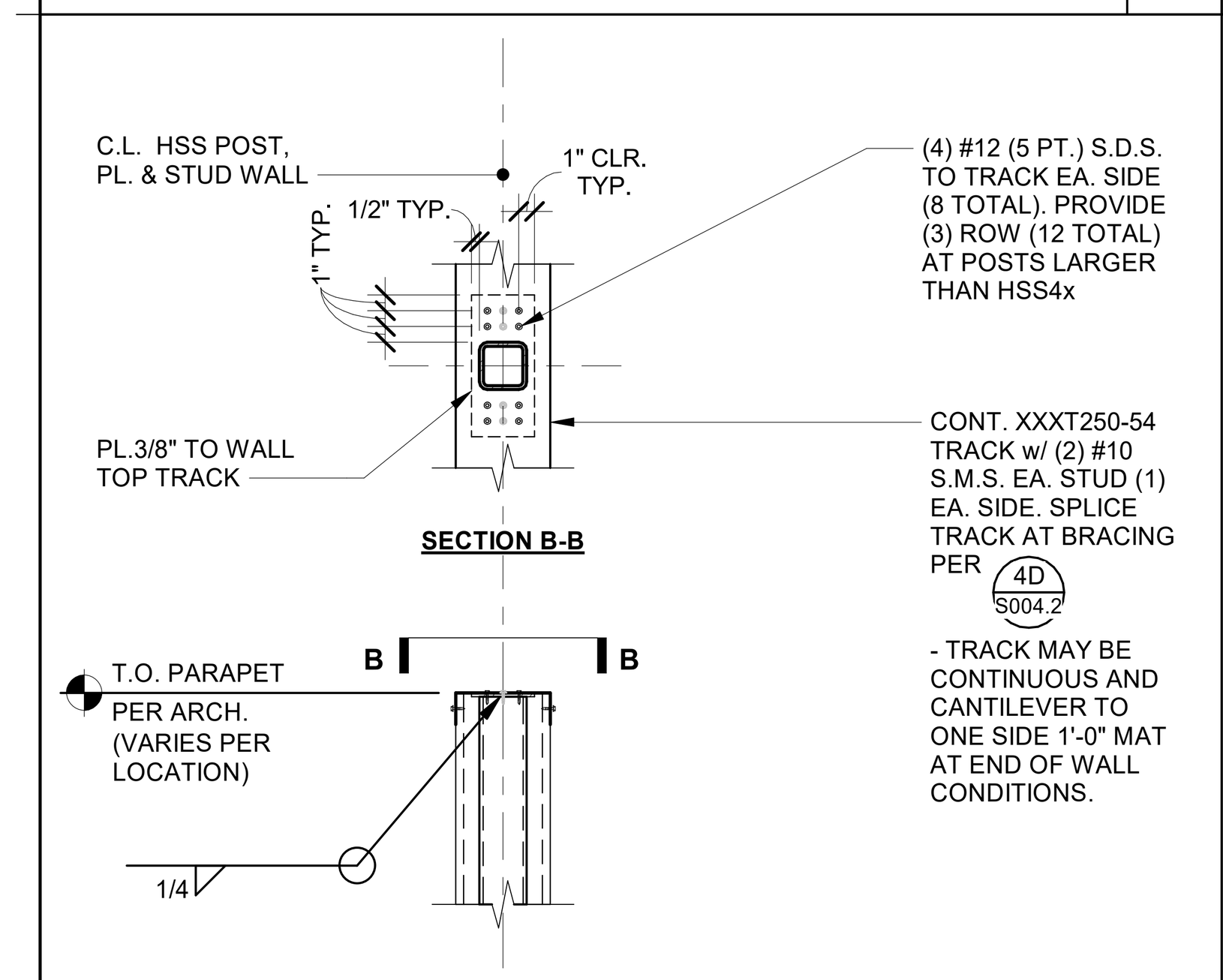

DETAIL — 1" = 1'-0" — 27

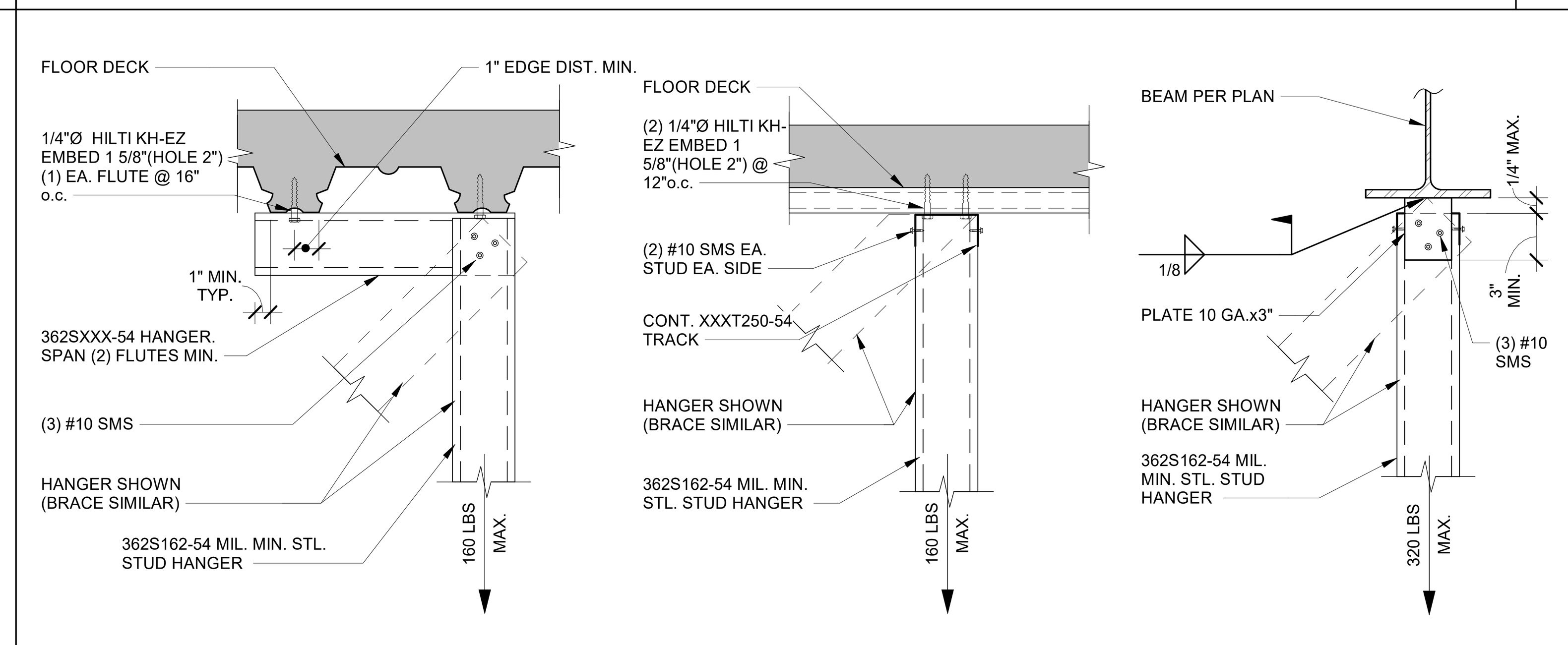

FLOOR DETAIL — 1 1/2" = 1'-0" — 17

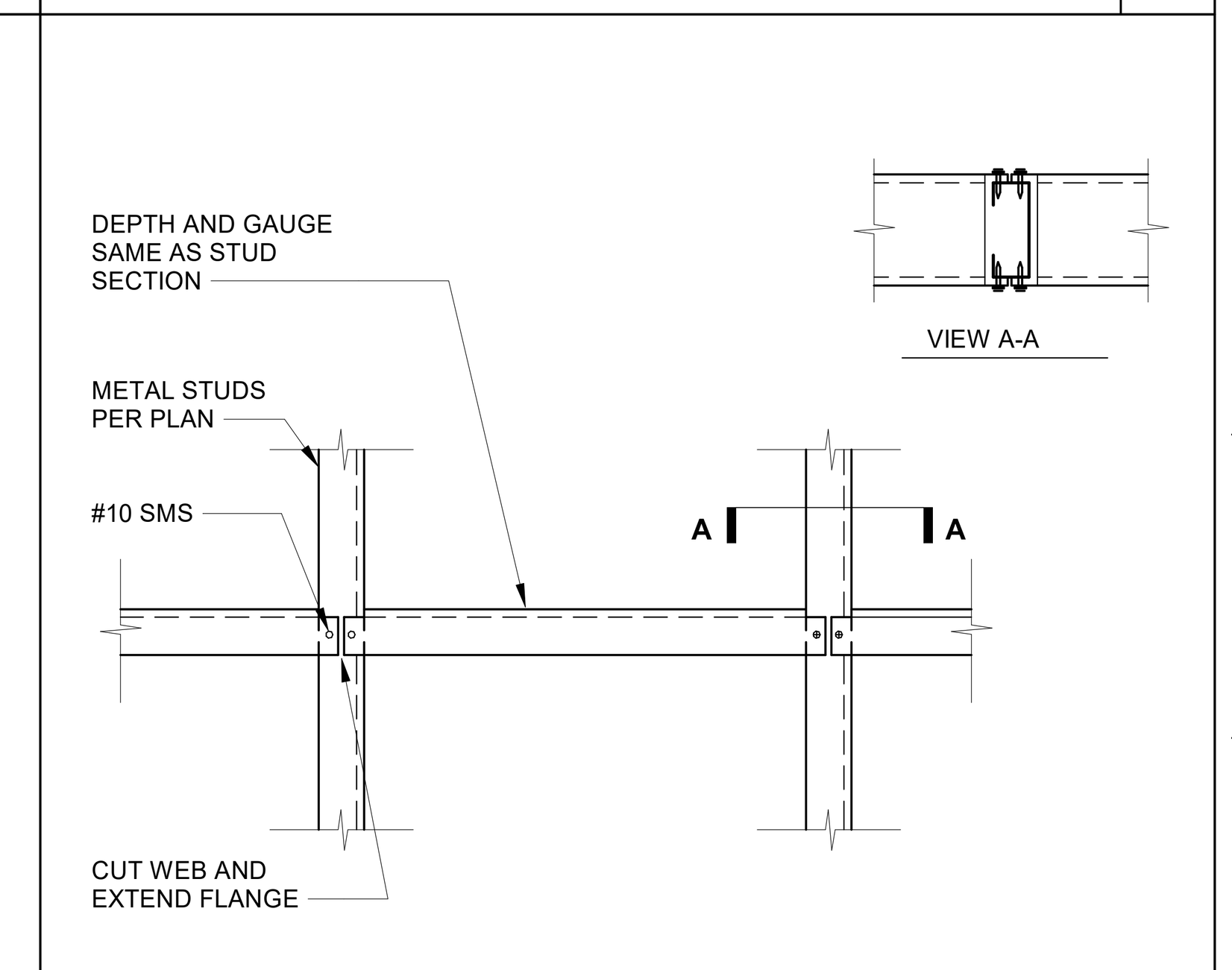

SOLID METAL BLOCKING — 12" = 1'-0" — 12

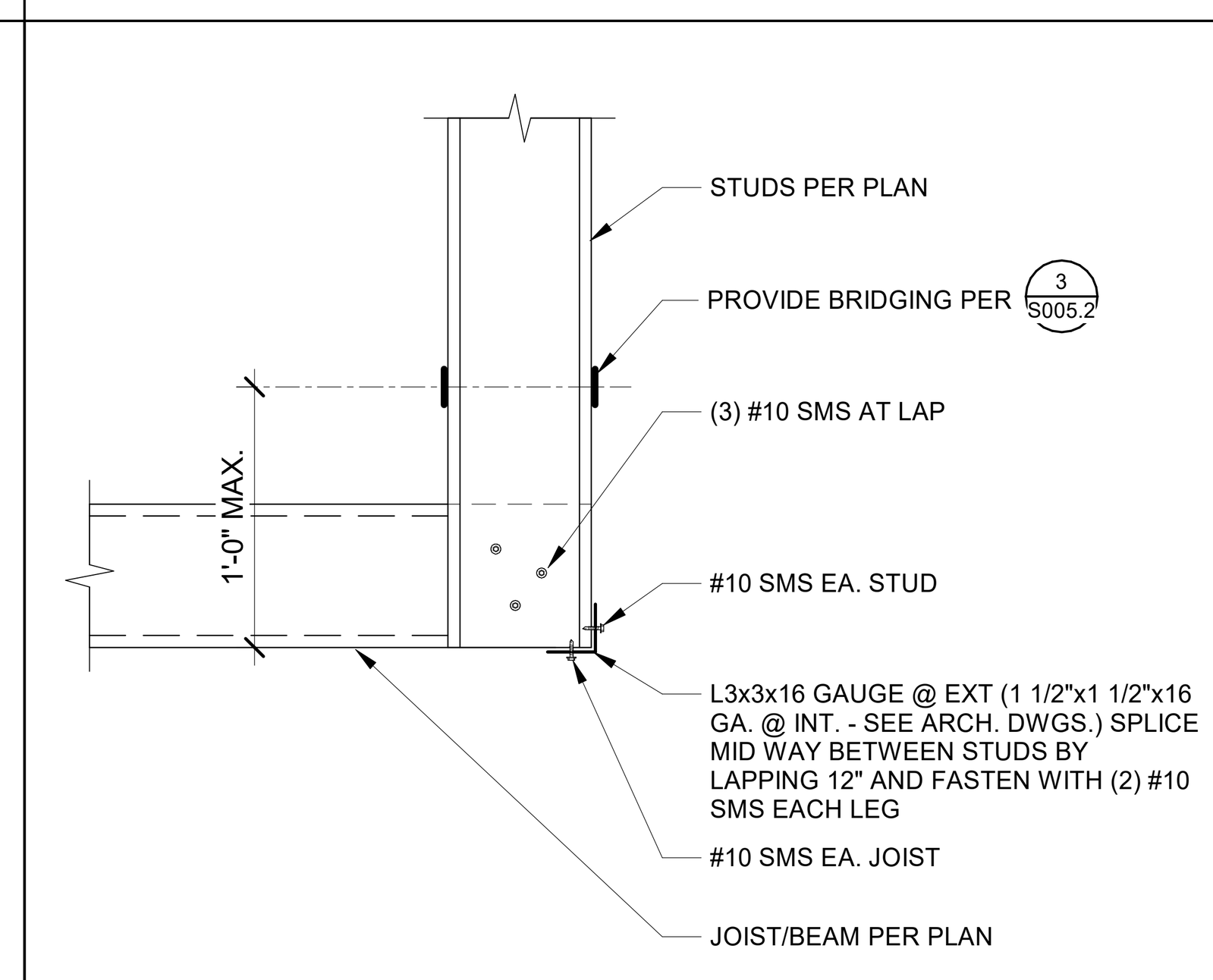

SOFFIT CORNER — 1 1/2" = 1'-0" — 23

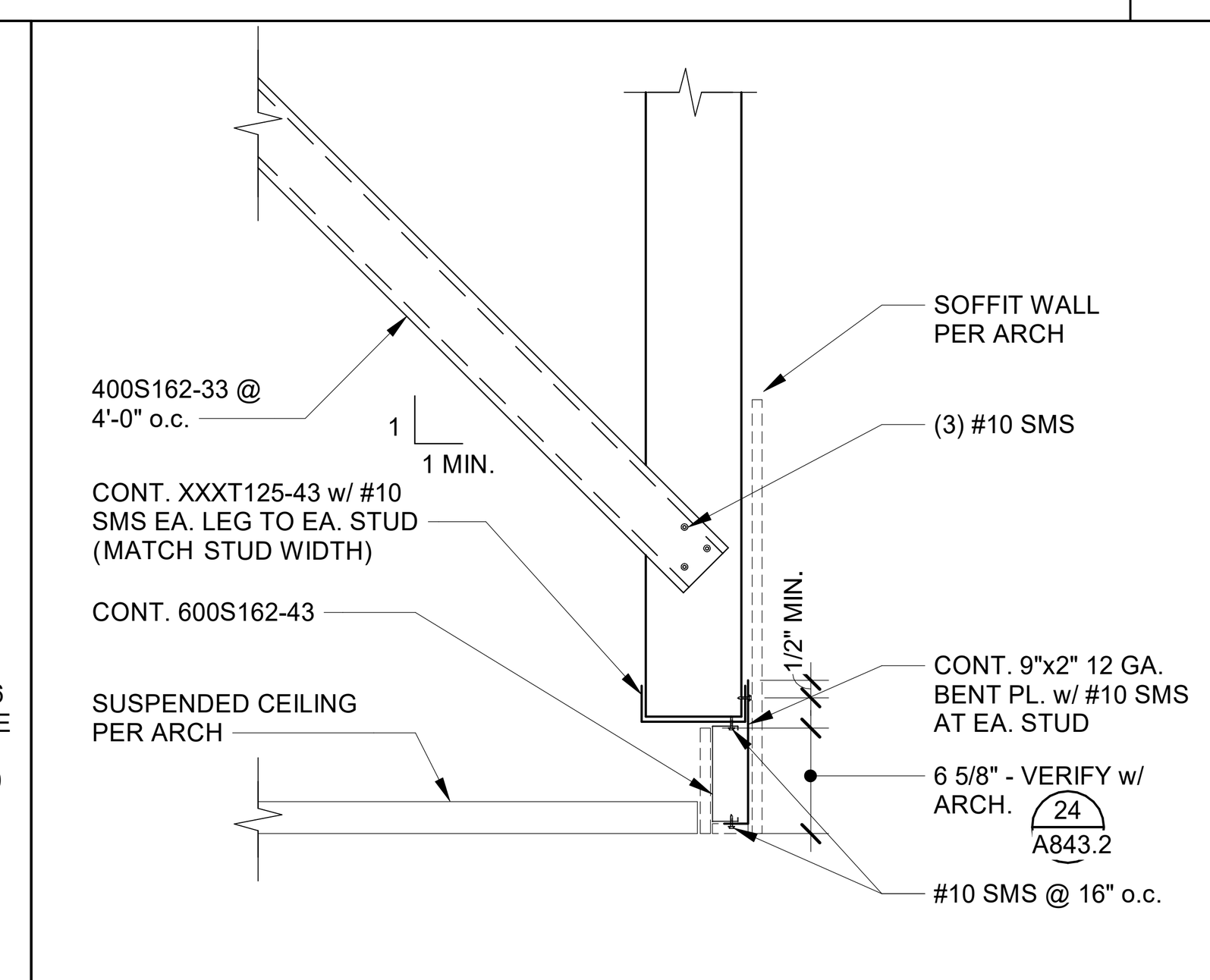

SOFFIT WALL AT SUSPENDED CLG. — 1" = 1'-0" — 18

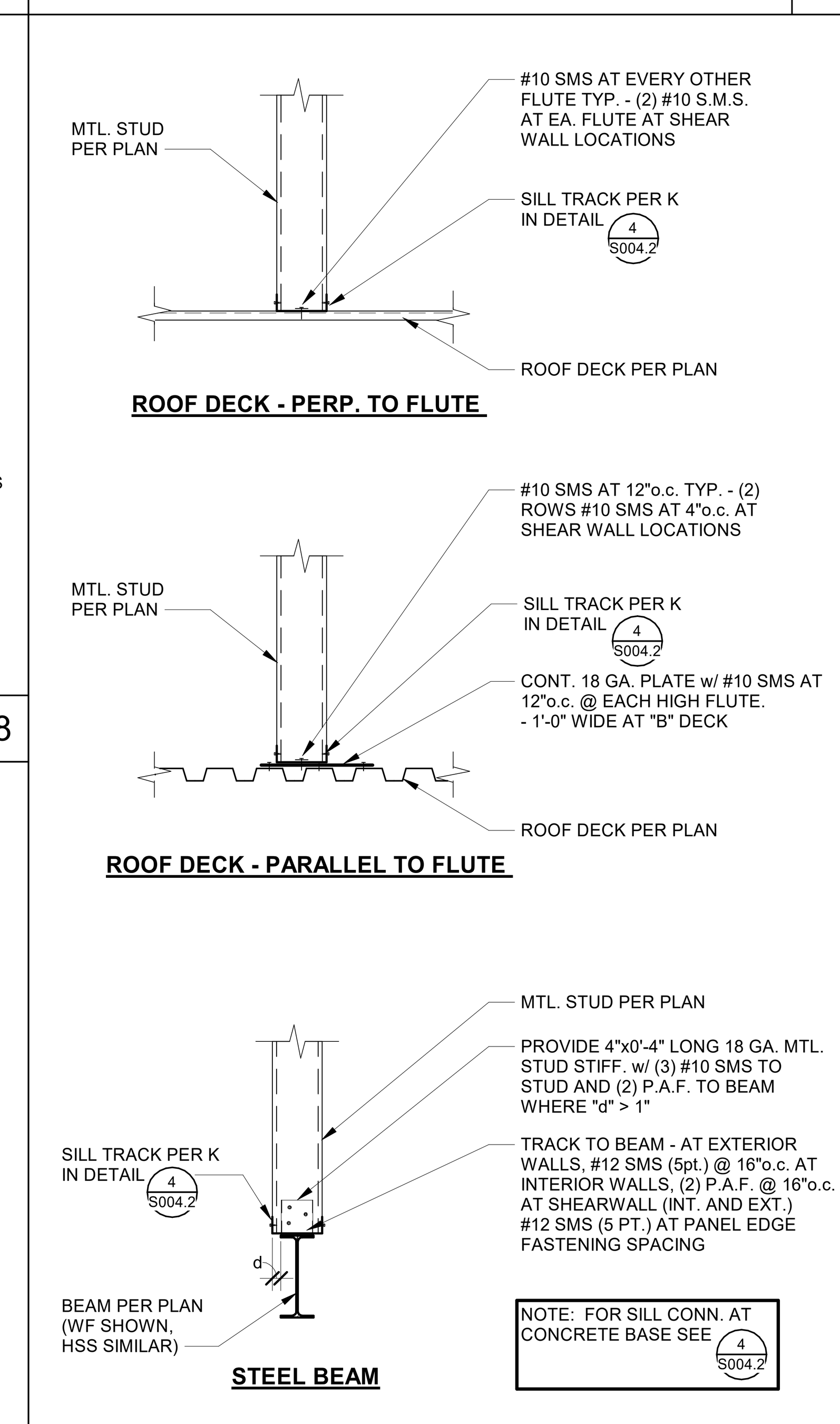

LIGHT GAUGE SILL CONNECTION — 3/4" = 1'-0" — 14

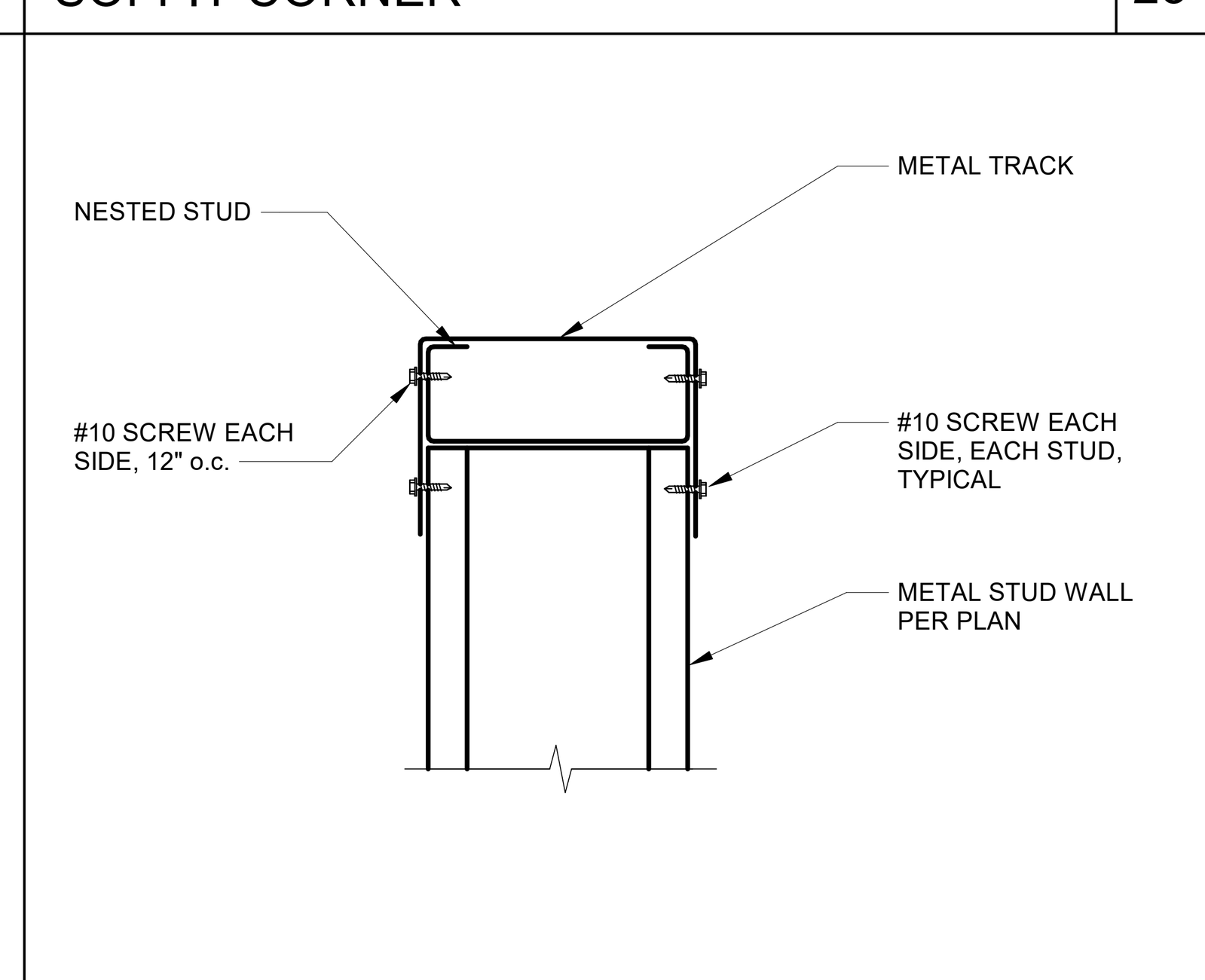

TYP. NESTED DETAIL — 1" = 1'-0" — 24

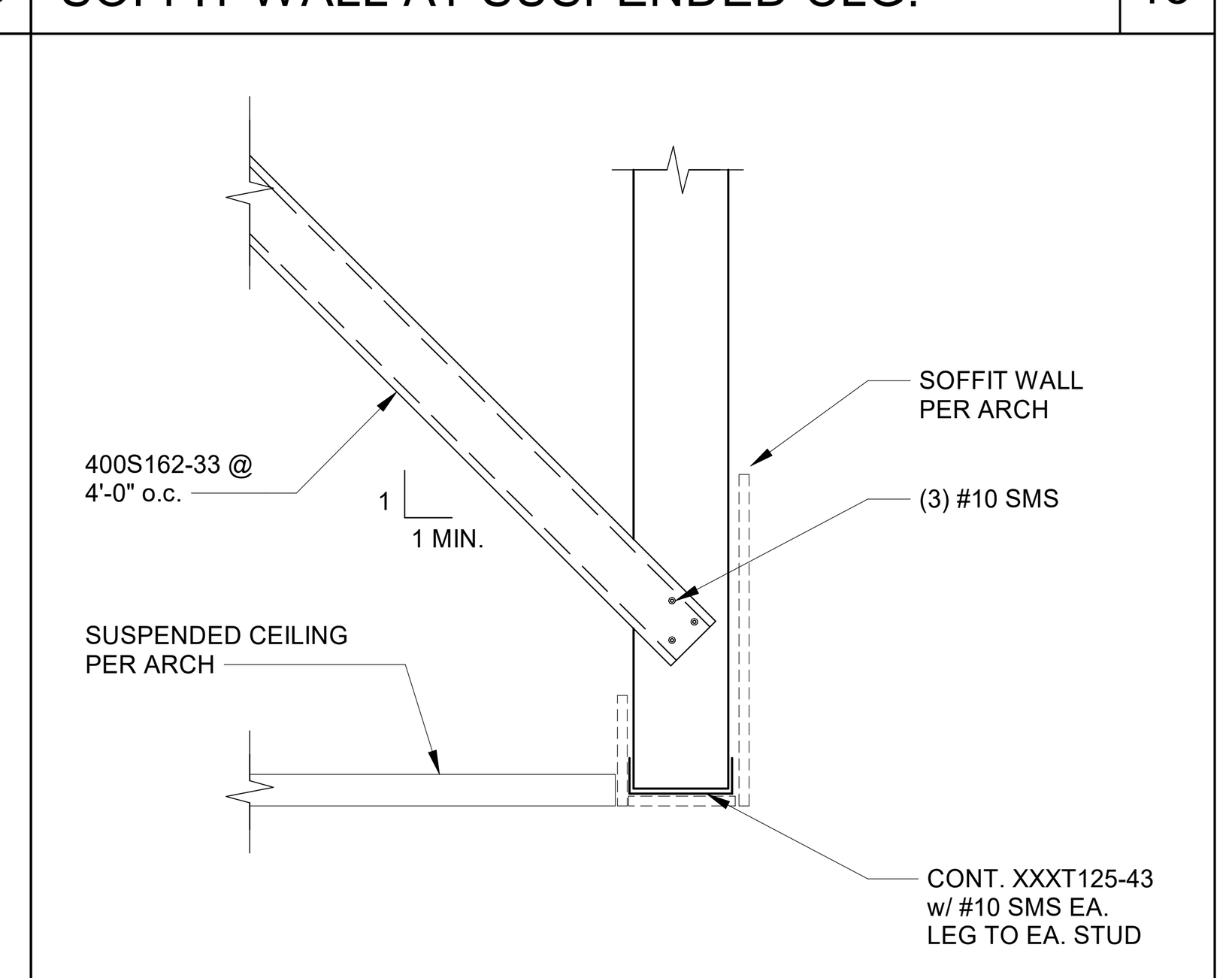

SOFFIT WALL AT SUSPENDED CLG. — 1" = 1'-0" — 19

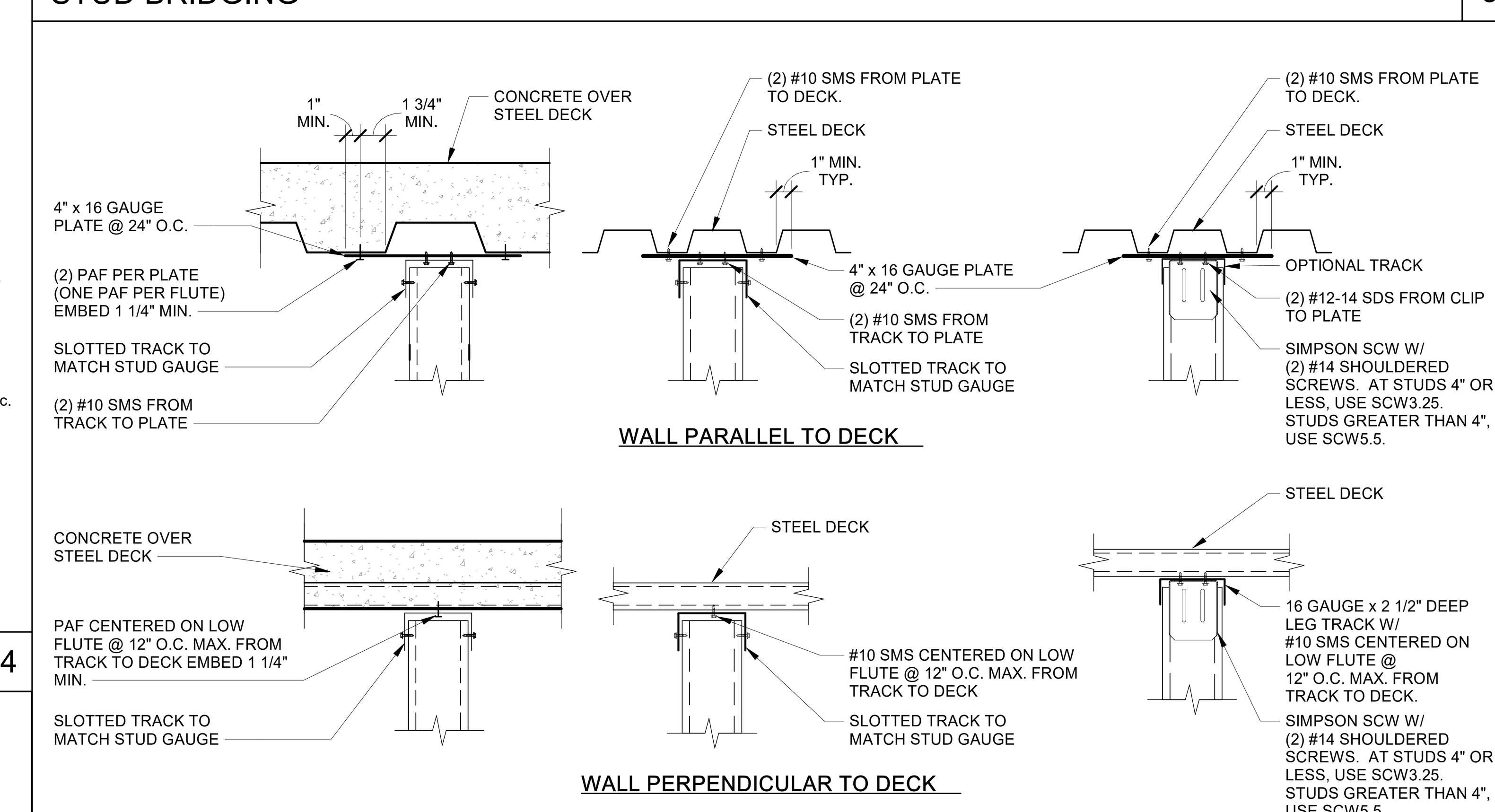

NOTE:
1. "SLOTTED TRACK" SHALL BE 2 1/2" DEEP MIN. STEEL TRACK W/ 1/4" x 1 1/2" VERTICAL SLOTS. AT STUD CONNECTION, PROVIDE #8 9/16" WAFER HEAD SCREW EACH SIDE CENTERED IN SLOT. TOP OF STUD SHALL MAINTAIN 3/4" CLEARANCE FOR MOVEMENT.
2. FOR SEALANTS/BARRIERS ABOVE TOP TRACK SEE ARCH. DWGS. (i.e. ACOUSTIC, FIRE RATED WALLS)
3. FASTENERS SHALL NOT BE ATTACHED THROUGH THE SLOTTED TRACK IN A MANNER THAT WILL IMPAIR MOVEMENT.
4. SLOTTED TRACK: SCAFCO STEEL STUD COMPANY IAPMO 0283.
5. FOR SLOPED ROOFS:
a. PROVIDE 'SLOTTED PITCHED TRACK' AT WALLS PERPENDICULAR TO SLOPE.
b. PROVIDE 'SLOTTED RAKE TRACK' AT WALLS PARALLEL TO SLOPE.
6. EXTERIOR WALL DOES NOT USE SLOTTED TRACK. SEE 29C/S007.2

NON-BEARING TOP OF WALL CONNECTION — N.T.S. — 5

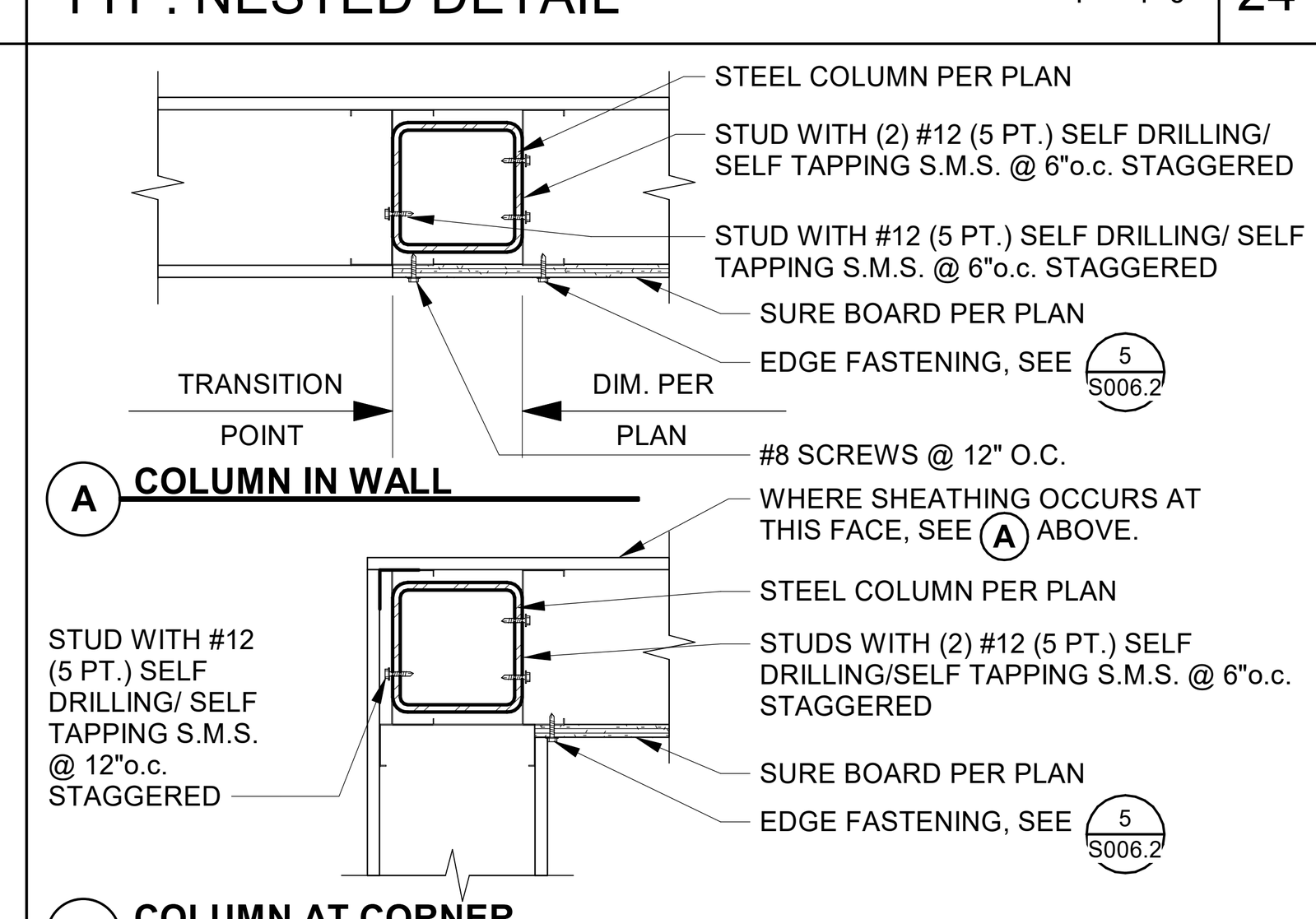

NOTE:
1. GENERAL FASTENING IS NOT SHOWN FOR CLARITY.
2. FOR NON-SHEAR WALL AND NON-LOAD BEARING WALLS, FASTENERS OF STUD TO HSS MAY BE (1) ROW #12 @ 12" o.c. STAGGERED

TYP. HSS/FASTENER CONN. — N.T.S. — 25

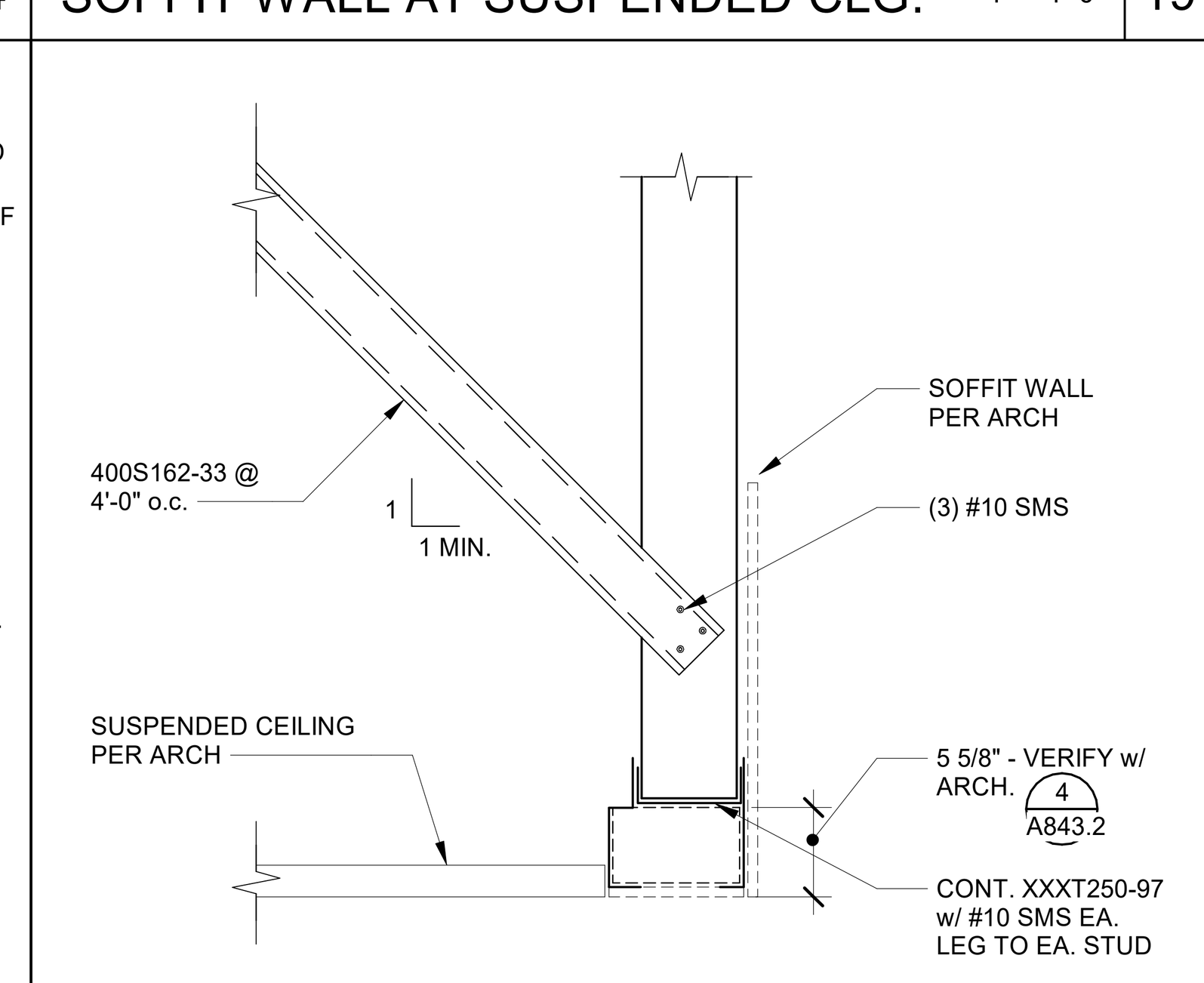

SOFFIT WALL AT SUSPENDED CLG. — 1" = 1'-0" — 20

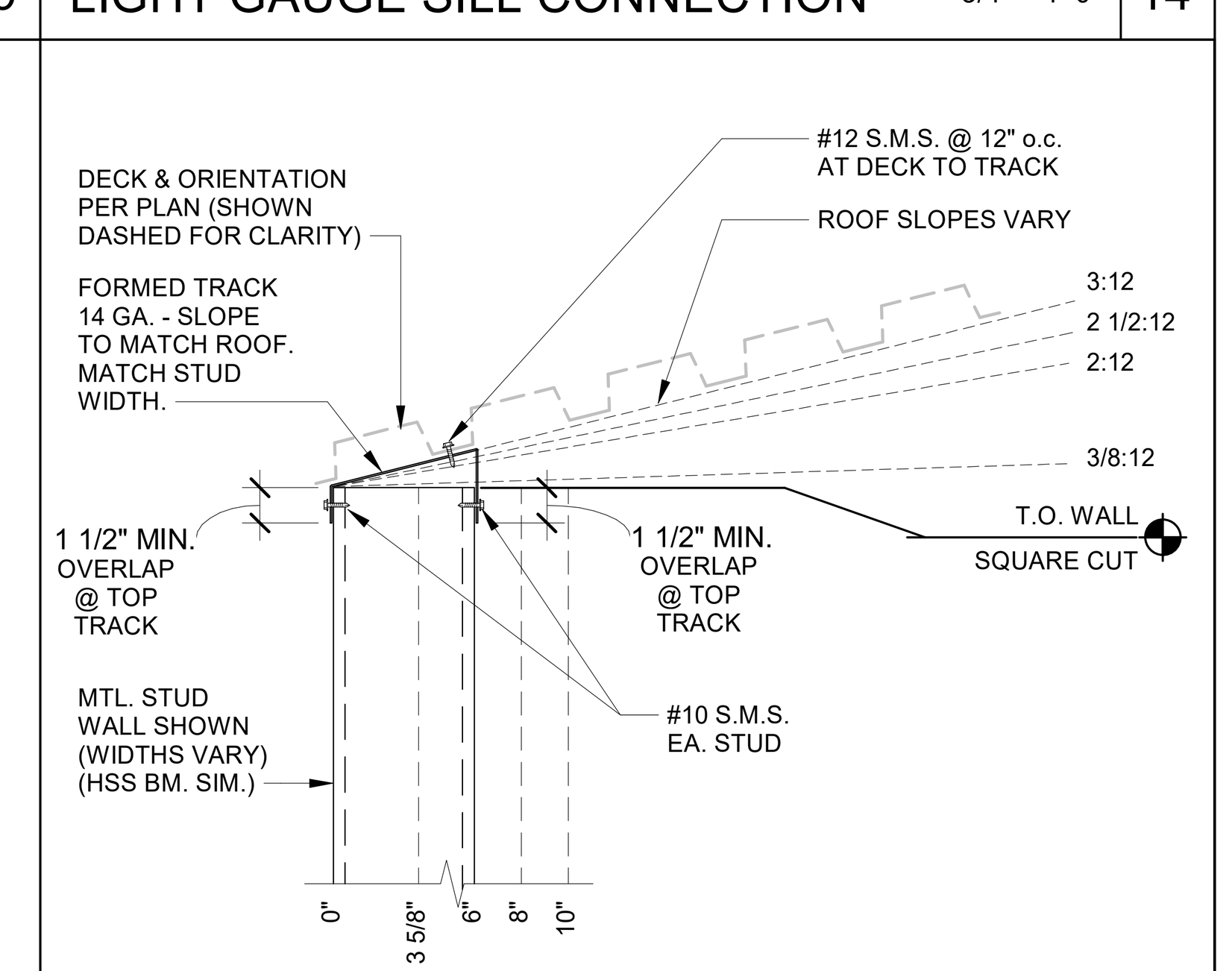

FORMED TRACK — 1 1/2" = 1'-0" — 15

\\tetr-file1\Users\luis.valtierra\Documents\12498-S-UC_luis.valtierra.rvt

PLOT DATE: 11/12/2025 7:23:35 PM

IDENTIFICATION STAMP
DIV. OF THE STATE ARCHITECT
APP: 02-122821 INC: 2
REVIEWED FOR
SS ☑ FLS ☑ ACS ☑
DATE: 11/20/2025

Teter, Inc. expressly reserves its common law copyright and other property rights in these plans. This document, the ideas and designs incorporated herein, as an instrument of professional service, is not to be used in whole or in part, for any other project without prior written authorization.

MARK	DATE	DESCRIPTION
A	11/13/2025	DSA BACKCHECK

REGISTERED PROFESSIONAL ENGINEER — ERIC S. BAILEY — No. S5609 — STRUCTURAL — STATE OF CALIFORNIA

TETER, INC.
FRESNO HEADQUARTERS
VISALIA | BAKERSFIELD | MODESTO | SAN LUIS OBISPO
ARCHITECTS ENGINEERS CONNECTED
TETER

VISALIA CAMPUS UNIVERSITY CENTER
COLLEGE OF THE SEQUOIAS
915 S. MOONEY BLVD
VISALIA, CALIFORNIA

DRAWING TITLE
TYPICAL DETAILS - METAL STUD

PROJECT NO.
22-12498

DRAWING
S005.2

\\tet-file1\Users\luis.valtierra\Documents\12498-S-UC_luis.valtierra.rvt

HOLDOWN & FOOTING SCHEDULE (1)						
MARK	HOLDOWN	ANCHOR ROD (5)	FRAMING FASTENERS	FRAMING MEMBERS	TENSION LOAD (4) ASD / LRFD	de
HD1	S/HDU4	SIMPSON PAB5	(6) #14 (2)	(2) 43 MIL. MIN.	3,060# / 4,884#	6 1/2"

1. ALL HOLDOWNS AND ANCHOR BOLTS IN THIS DETAIL ARE MANUFACTURED BY SIMPSON STRONGTIE. SEE PRODUCT CATALOG AND **IAPMO-ES REPORT NO. ER-124 (ISSUED: JUNE 2010, REVISED MAY 2021)** FOR ADDITIONAL INFORMATION.
2. 1/4" SELF-TAPPING SCREWS MAY BE SUBSTITUTED FOR #14 SELF-TAPPING SCREWS.
3. A ROUND STEEL STANDARD PLATE WASHER CONFORMING TO **ASME B18.22.1**, TYPE A, SHALL BE INSTALLED BETWEEN THE FRAMING MEMBER BOLT NUT AND THE FRAMING MEMBER.
4. LOAD DEMAND SHOWN IS FOR WORST CASE WIND AND SEISMIC LOADING, AND LIMITING LOAD BETWEEN HOLDOWN AND ANCHOR BOLT. ANCHOR DESIGNS CONFORM TO **ACI 318-19 CH.17** AND ASSUMES CRACKED CONCRETE WITH NO SUPPLEMENTARY REINFORCEMENT. 0.8 REDUCTION FACTOR APPLIED TO ALLOWABLE CAPACITY OF HOLDOWN.
5. ALL ANCHOR RODS SHALL BE HEX HEAD **ASTM F1554** GRADE 36 (U.N.O.) CLASS 2A.
6. WHERE HSS COLUMN REPLACES HOLDOWN AND ANCHOR ROD (WHERE OCCURS PER PLAN), SEE DETAIL 20/S006.2

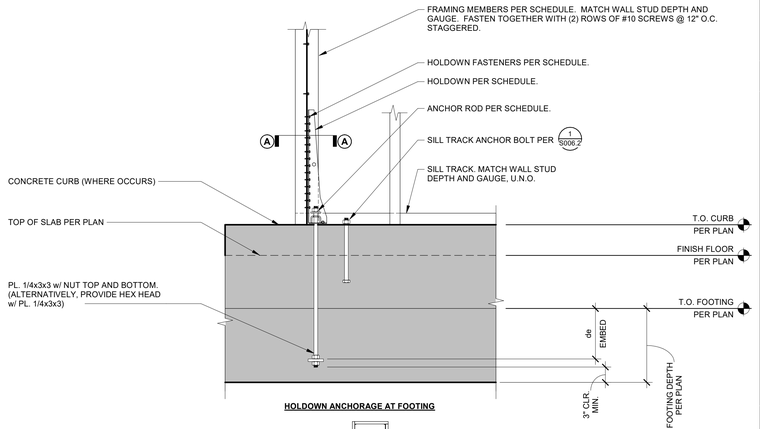

HOLDOWN ANCHORAGE AT FOOTING

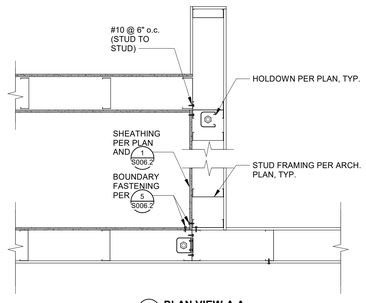

A **PLAN VIEW A-A**

TYPICAL HOLDOWN @ BEAM N.T.S. 13

TYPE	SURE-BOARD (IAPMO ES-0126)	MINIMUM STUD FRAMING		FASTENING			SILL ANCHOR BOLTS	REMARKS	ALLOWABLE LOAD (ASD)
		WIDTH	MIL.	SIZE	TYPE	SPACING			
/1	SERIES 200	1 5/8"	33 MIL.	#8	#2 POINT SELF TAPPING/ SELF DRILLING SCREW	6:6:12	5/8"Ø @ 32" O.C.	BLOCK ALL PANEL EDGES	434 PLF

NOTES:
1. PROVIDE FRAMING MEMBERS AT MINIMUM WIDTH INDICATED WHERE FRAMING MEMBERS RECEIVE EDGE FASTENING (E.F.) FROM ABUTTING PANELS.
2. FOUNDATION SILL TRACK SHALL HAVE A MINIMUM FLANGE WIDTH OF 1 1/4" WITH MATCHING STUD DEPTH AND 54 MIL MIN.
3. FOR ADDITIONAL PANEL FASTENING INFORMATION, SEE 5/S006.2 & 10/S006.2
4. FOR TRACK HOLE SIZE AND PLATE WASHER AT ANCHOR BOLTS SEE 25/S006.2
5. FOR ADDITIONAL SILL ANCHOR BOLT INFORMATION, SEE 5/S004.2

SHEATHING SHEAR PANEL SCHEDULE N.T.S. 1

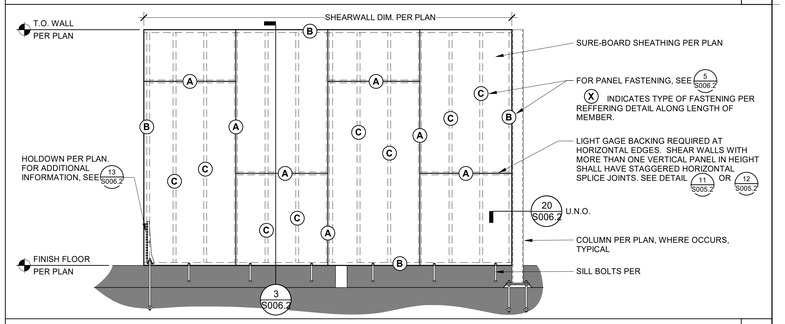

TYP. SHEAR WALL ELEV. N.T.S. 2

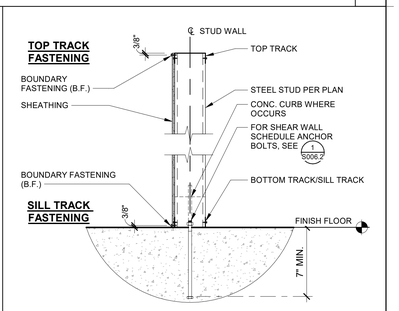

SHTG. BOUNDARY FASTENING N.T.S. 3

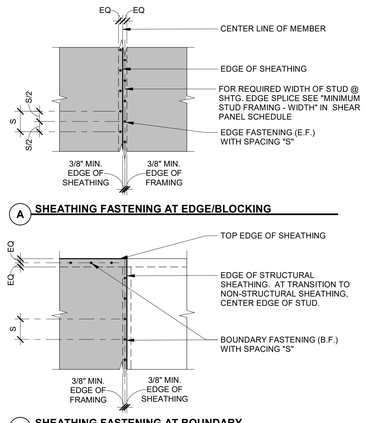

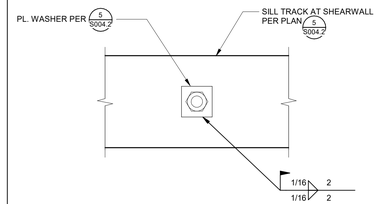

NOTE:
1. PROVIDE FILLET WELD EA. SIDE (ALL 4 SIDES) OF PL. WASHER AT OVERSIZED/SLOTTED HOLES IN SHEARWALL SILL TRACK. APPLICABLE TO ALL SHEARWALL TYPES (2 SIDES AS INDICATED AT NON-SHEAR WALL).
2. STANDARD HOLES IN TRACK DO NOT REQUIRE EITHER OPTION (WELD).
3. THIS DETAIL IS ONLY TO BE USED WHERE HOLES ARE DEFORMED, OVERSIZED, OBLONG, SLOTTED, ETC.
4. DETAIL IS APPLICABLE FOR ALL WALL TYPES.

OVER SIZED HOLE IN TRACK N.T.S. 25

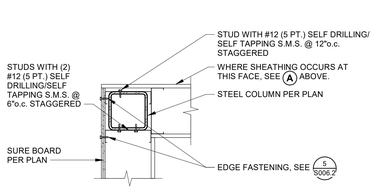

NOTE:
1. GENERAL FASTENING IS NOT SHOWN FOR CLARITY.

TYP. HSS/FASTENER CONN. N.T.S. 20

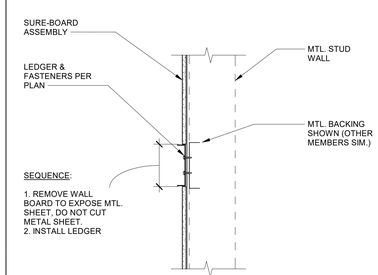

LEDGER INST. AT SURE-BOARD 1 1/2" = 1'-0" 15

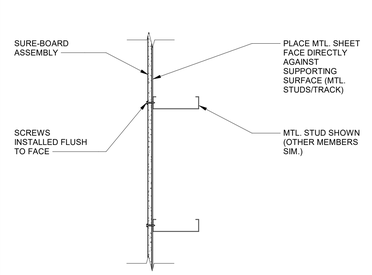

SURE-BOARD INSTALLATION 1 1/2" = 1'-0" 10

SHTG. EDGE/INTERM. FASTENING N.T.S. 5

PLOT DATE: 11/12/2025 7:23:38 PM

IDENTIFICATION STAMP
DIV. OF THE STATE ARCHITECT
APP: 02-122821 INC: 2
REVIEWED FOR
SS ☑ FLS ☑ ACS ☑
DATE: 11/20/2025

Teter, Inc. expressly reserves its common law copyright and other property rights in these plans. This document, the ideas and designs incorporated herein, as an instrument of professional service, is not to be used in whole or in part, for any other project without prior written authorization.

MARK	DATE	DESCRIPTION
A	11/13/2025	DSA BACKCHECK

REGISTERED PROFESSIONAL ENGINEER LUIS E. BALTIERRA No. S5626 STRUCTURAL STATE OF CALIFORNIA

TETER, INC.
FRESNO HEADQUARTERS
VISALIA | BAKERSFIELD | MODESTO | SAN LUIS OBISPO
ARCHITECTS ENGINEERS CONNECTED

VISALIA CAMPUS UNIVERSITY CENTER
COLLEGE OF THE SEQUOIAS
915 S. MOONEY BLVD
VISALIA, CALIFORNIA

DRAWING TITLE
TYPICAL DETAILS - METAL STUD

PROJECT NO.
22-12498

DRAWING
S006.2

OVERHANG AT FLOOR OPENING — 3/4" = 1'-0" — 27

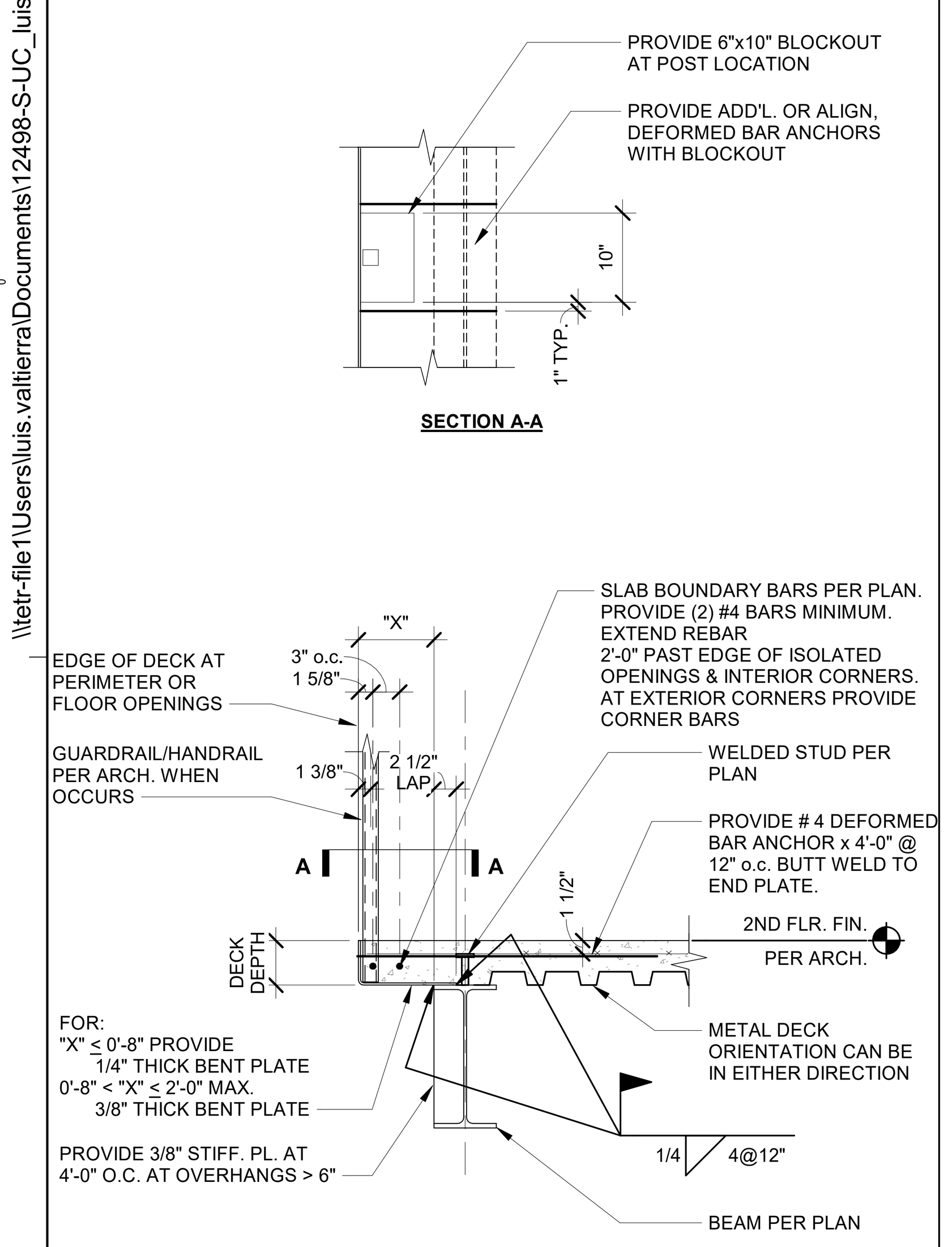

STUD FOR COMPOSITE DECK DETAIL — N.T.S. — 17

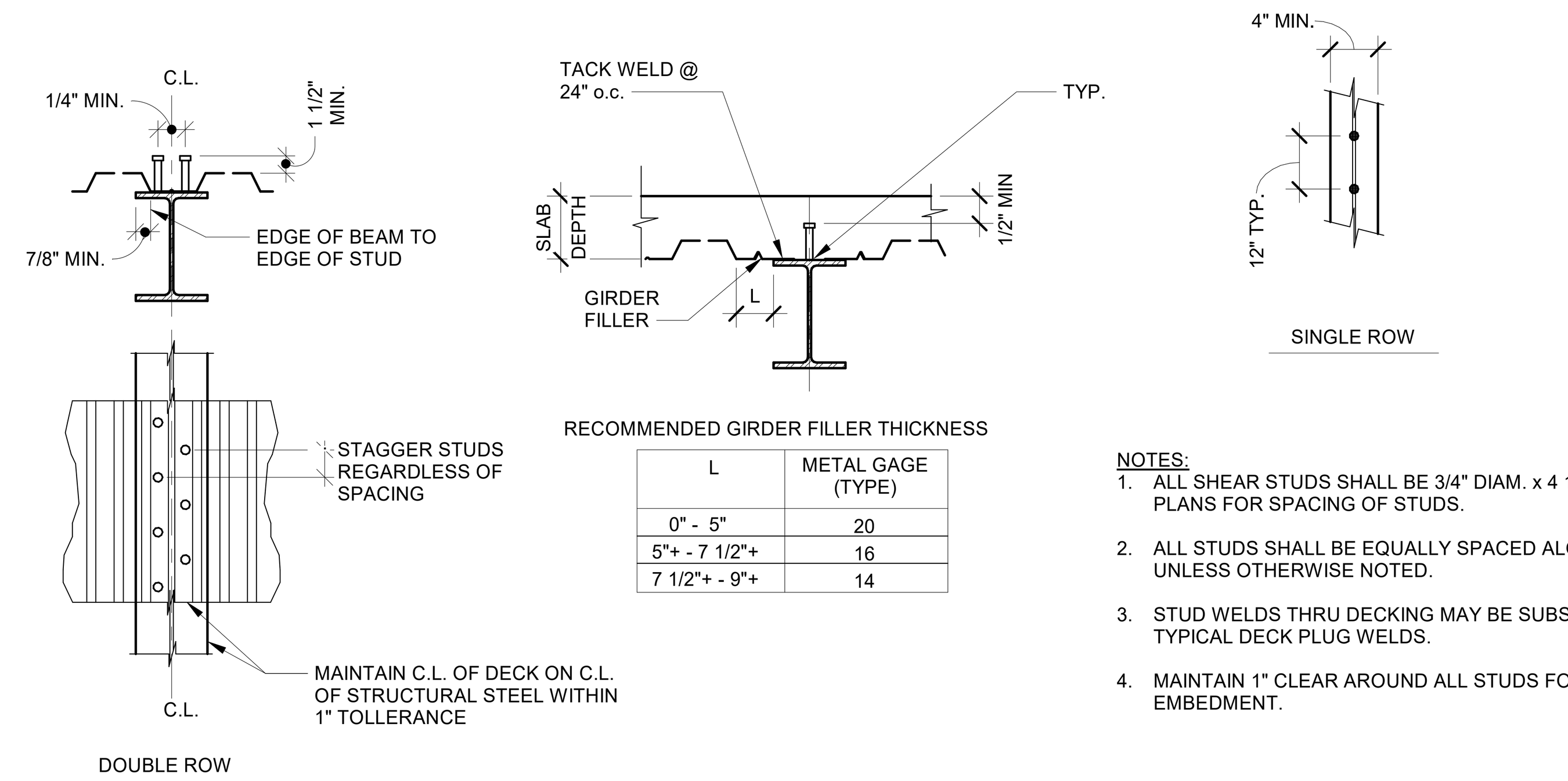

RECOMMENDED GIRDER FILLER THICKNESS

L	METAL GAGE (TYPE)
0" - 5"	20
5"+ - 7 1/2"+	16
7 1/2"+ - 9"+	14

NOTES:
1. ALL SHEAR STUDS SHALL BE 3/4" DIAM. x 4 1/2"L. SEE PLANS FOR SPACING OF STUDS.
2. ALL STUDS SHALL BE EQUALLY SPACED ALONG BEAMS, UNLESS OTHERWISE NOTED.
3. STUD WELDS THRU DECKING MAY BE SUBSTITUTED FOR TYPICAL DECK PLUG WELDS.
4. MAINTAIN 1" CLEAR AROUND ALL STUDS FOR PROPER EMBEDMENT.

NOTES:
1. ALL DECK IS FURNISHED IN 24" OR 36" WIDTHS. ANY CUTTING THAT IS REQUIRED SHALL BE DONE IN THE FIELD BY THE DECK ERECTOR.
2. STARTING AT THE GIRDER ENDS, PLACE THE FIRST STUD AT APPROXIMATELY 12" FROM THE COLUMN CENTER LINE (OR FACE OF A WALL) AND WORK TOWARD THE CENTER OF THE GIRDER WITH UNIFORM SPACES BETWEEN THE STUDS. IF A DOUBLE ROW OF STUDS IS REQUIRED, IT IS BETTER TO PLACE THEM IN A STAGGERED PATTERN RATHER THAN SIDE BY SIDE. STUD SPACING BETWEEN FLOOR BEAMS MAY BE DIFFERENT FROM THE SPACING AT GIRDER ENDS.
3. WHEN THE NUMBER OF STUDS IS LESS THAN THE NUMBER OF RIBS START AT BEAM ENDS (AT THE COLUMN OR WALL) AND PLACE A SINGLE STUD IN EVERY OTHER FLUTE (OR EVERY FOURTH FLUTE IF RIBS ARE 6"o.c.); WORK TOWARD THE CENTER OF THE BEAM. IF THE STUDS REMAIN, FILL IN EMPTY RIBS, AGAIN STARTING AT BEAM ENDS AND WORKING TOWARD THE CENTER. MAXIMUM STUD SPACING IS 36"o.c.
4. WHEN THE NUMBER OF STUDS IS MORE THAN THE NUMBER OF RIBS, IF MORE THAN ONE STUD PER RIB IS REQUIRED, PLACE A DOUBLE OR TRIPLE ROW AS NEEDED. STARTING FROM BEAM ENDS AND WORKING TOWARD THE CENTER OF THE BEAM.
5. IN GENERAL, IF STUDS CANNOT BE PLACED WITH UNIFORM SPACING ALONG THE BEAM, THE GREATEST NUMBER OF STUDS SHOULD OCCUR AT THE ENDS.

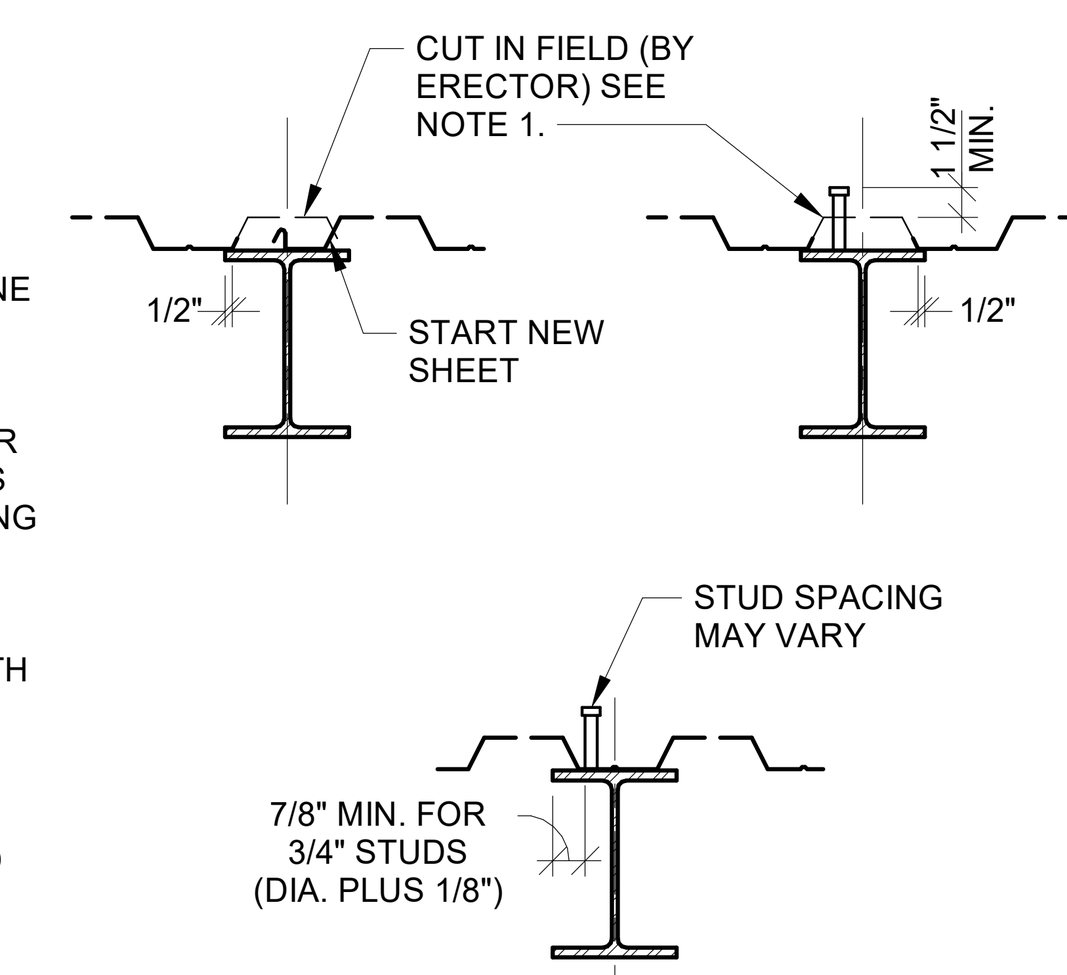

FLOOR DECK SCHEDULE — 12" = 1'-0" — 2

FLOOR DECK

DECK			CONCRETE FILL			TYPICAL ATTACHMENT			REMARKS
MARK	PROFILE	GAGE	TYPE	THICKNESS ABOVE TOP FLUTE	REINFORCING	⊥ TO DECK	∥ TO DECK	SIDE LAPS	
W3	VERCO W3	20	NORMAL WEIGHT	3 1/2 "	6x6 W2.1xW2.1 WIRE MESH	(4) 0.41" PUDDLE WELDS (3/4"Ø VISIBLE) 1 PER RIB (4 TYP.) 2 PER RIB AT LFRS	0.41" PUDDLE WELDS (3/4"Ø VISIBLE) 24" o.c. TYP. 6" o.c. AT LFRS	VSC2 @ 24" O.C.	COMPLY W/ IAPMO UES REPORT ES-2018 (ISSUED 07/11/2019, REVISED 6/2025)
STAIRS PLANS	VERCO B-36 FORMLOK	16	NORMAL WEIGHT	2 1/2 "	6x6 W4xW4 WIRE MESH	(4) 0.41" PUDDLE WELDS (3/4"Ø VISIBLE) 1 PER RIB (4 TYP.)	(4) 0.41" PUDDLE WELDS (3/4"Ø VISIBLE) 12" o.c. TYP.	VSC2 @ 18" O.C.	COMPLY W/ IAPMO UES REPORT ES-2018 (ISSUED 07/2019, REVISED 06/2025)

NOTES:
1. WHEREVER POSSIBLE, DECK LAYOUTS SHALL PROVIDE SHEETS OF SUFFICIENT LENGTH TO CONT. SPAN AT LEAST THREE SPANS. ENDS SHALL TERMINATE OVER A SUPPORT PERP. TO THE DECK SPAN, EXCEPT AT OPENINGS OR BUILDING EDGES WHERE DECKS MAY BE CANTILEVERED.
2. DECK MAY REQUIRE VERTICAL SHORING IF NOT CONT. FOR THREE SPANS DEPENDING ON SPAN LENGTHS. GENERAL CONTRACTOR TO PROVIDE SHORING WHERE REQ'D BASED ON METAL DECK LAYOUT SHOP DRAWINGS.
3. DECK SHALL HAVE A MINIMUM OF 2" BEARING AT ALL SUPPORTING MEMBERS PERPENDICULAR TO DECK SPAN AND 2" AT ALL MEMBERS PARALLEL TO DECK SPAN.
4. DIAMETER OF PUDDLE WELD SHOWN REPRESENTS EFFECTIVE FUSION AREA.
5. WHERE TWO ADJACENT DECK SHEETS ARE SUPPORTED BY ONE FRAMING MEMBER, EACH SHEET SHALL INDIVIDUALLY SATISFY THE REQUIREMENTS OF NOTE 3 AND OF THE ATTACHMENT SCHEDULE.
6. DO NOT SUSPEND PIPING, LIGHT FIXTURES, CONDUITS OR OTHER UTILITIES FROM METAL DECK ALONE, AND DO NOT PLACE PIPES IN CONCRETE FILL OVER DECK. PRIMARY ATTACHMENT FOR SUPPORT SHALL BE TO STRUCTURE, ATTACHMENT TO CONC. O/ METAL DECK IS ACCEPTABLE FOR INTERMEDIATE SUPPORTS. SEE 2/S008.2
7. DECK ATTACHMENTS TO STRUCTURAL MEMBERS, AS SCHEDULED, PER MANUFACTURERS RECOMMENDATIONS.
8. FOR EDGE OF DECK CONDITION, SEE DETAIL 27/S007.2 & 29/S007.2
9. LFRS - LATERAL FORCE RESISTING SYSTEM
   ALL FLOOR BEAMS IN LINE WITH MOMENT FRAMES AS SHOWN IN MOMENT FRAME LINE ELEVATIONS ON S400, S401, AND S402 SHALL BE CONSIDERED LFRS MEMBERS. ADD'L MEMBERS SHALL BE AS NOTED ON FRAMING PLANS.
10. WELDED WIRE REINFORCING SHALL BE OVERLAPPED 1 FULL MESH +2" ON SIDES AND ENDS (8" MIN)

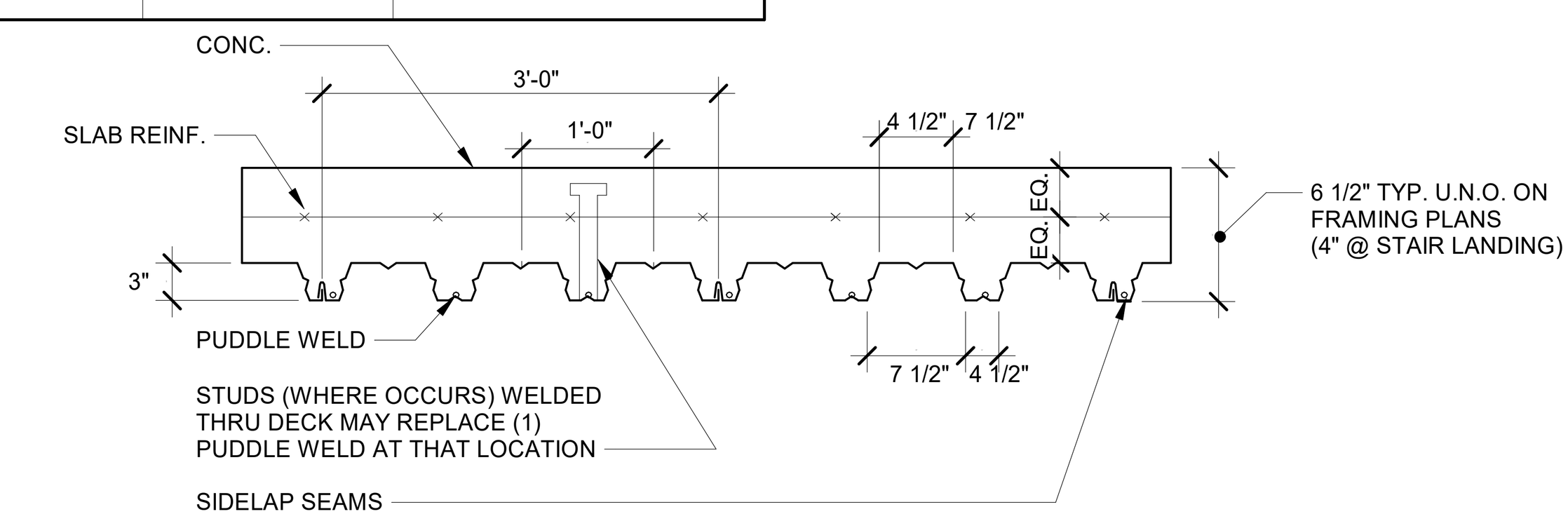

DECK PROPERTIES

TYPE	GAGE	I (IN^4)	+S (IN^3)	-S (IN^3)
W3	20	0.907	0.510	0.528

NOTES:
1. ASTM A 653 SS GRADE 50 WITH GALVANIZED FINISH. 50,000 PSI MINIMUM YIELD STRENGTH. 65,000 PSI MINIMUM TENSILE STRENGTH.

VERCO W3 DECK

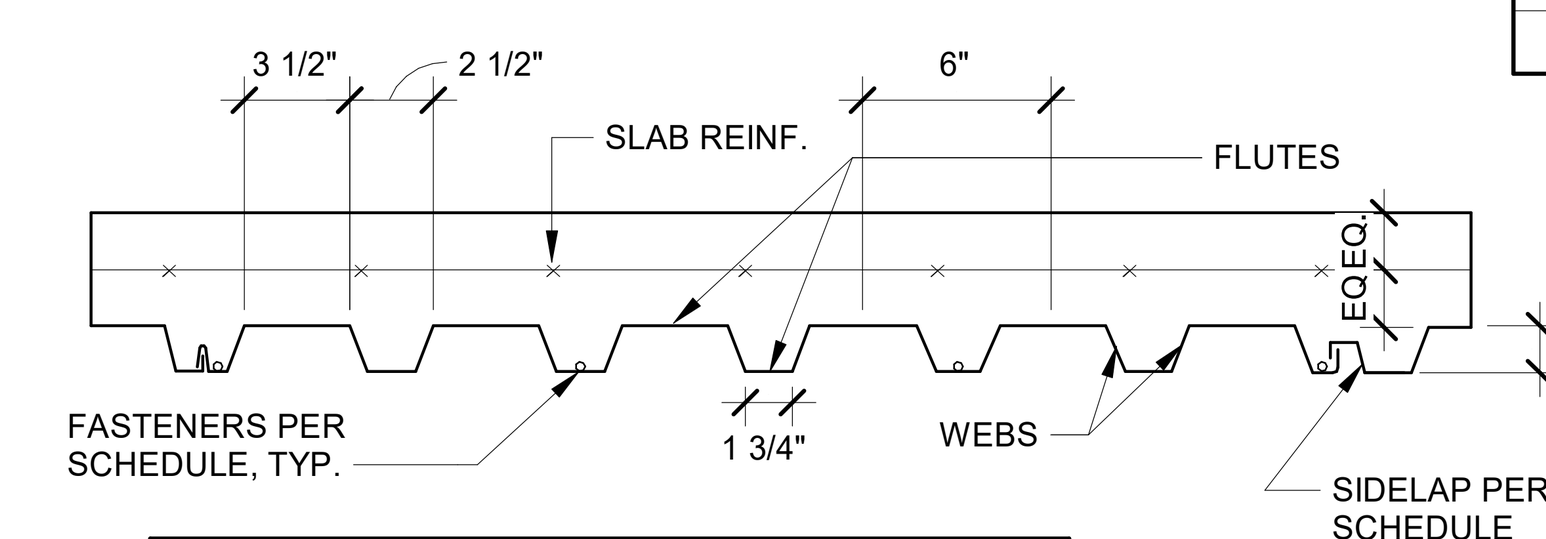

DECK PROPERTIES

TYPE	GAGE	I (IN^4)	+S (IN^3)	-S (IN^3)
B-36	16	0.381	0.399	0.410

NOTES:
1. ASTM A 653 SS GRADE 50 WITH G60 GALVANIZED FINISH. 50,000 PSI YIELD STRENGTH. 65,000 PSI MINIMUM TENSILE STRENGTH.

VERCO B-36 FORMLOK

FLOOR EDGE CONDITION — N.T.S. — 29

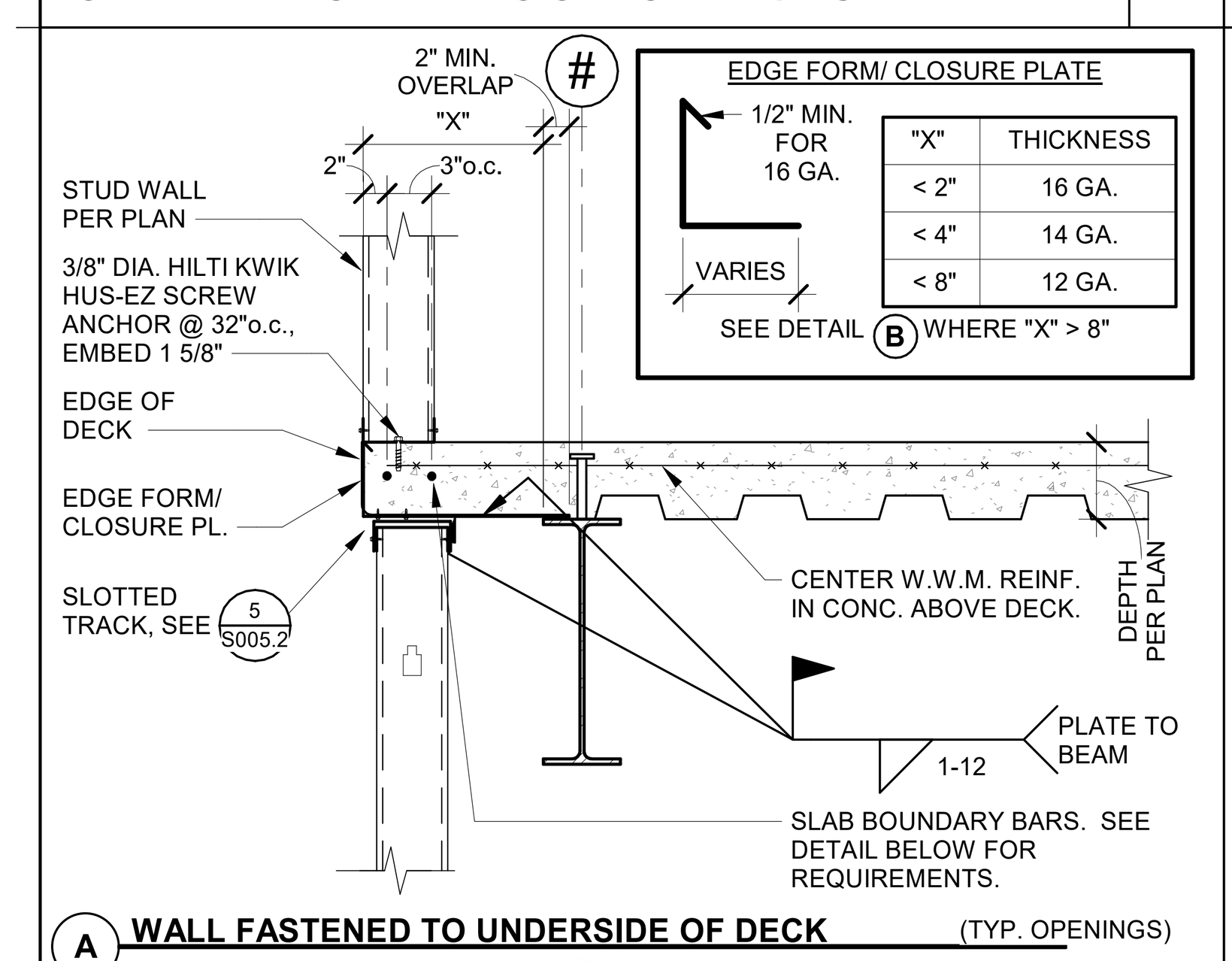

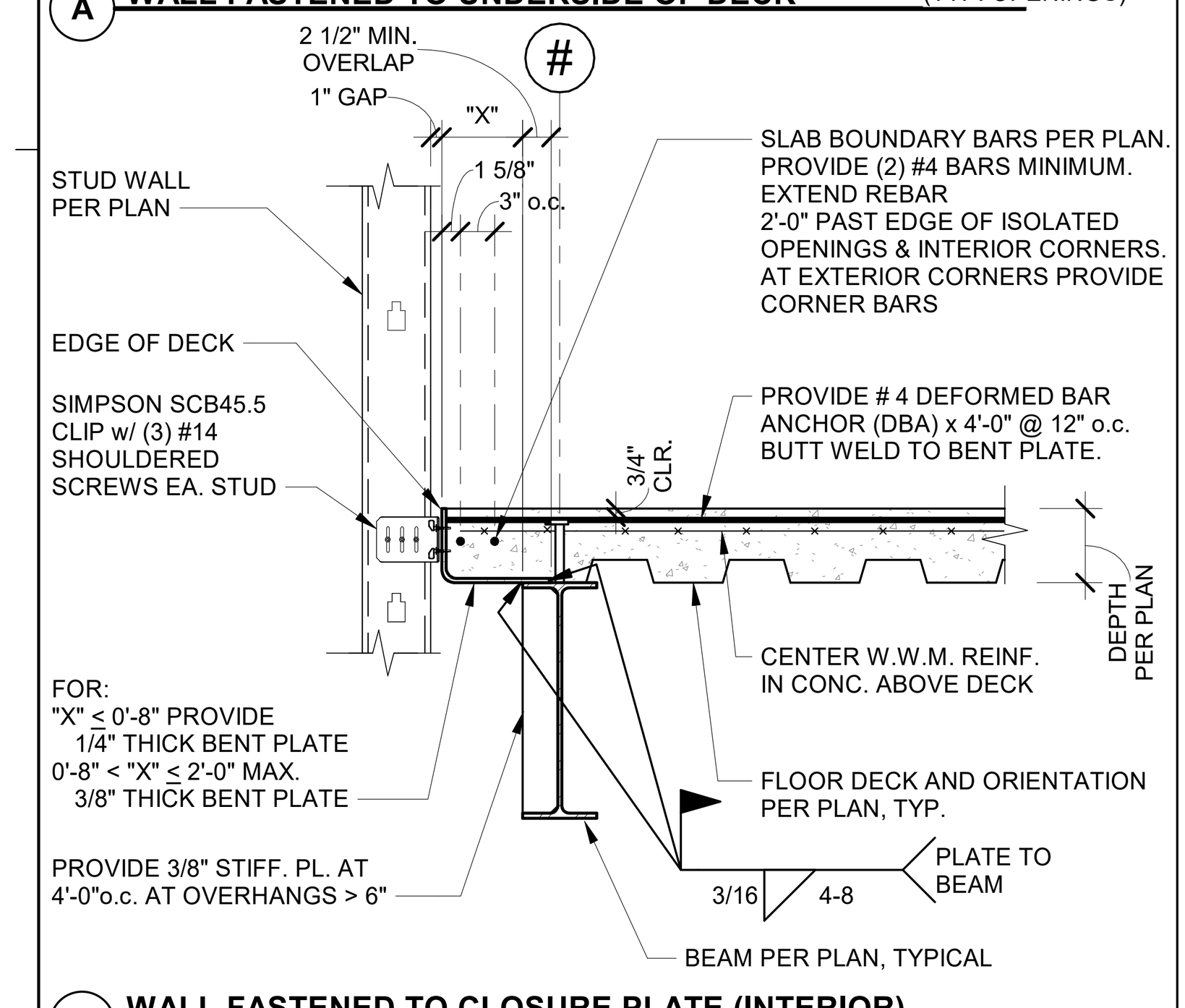

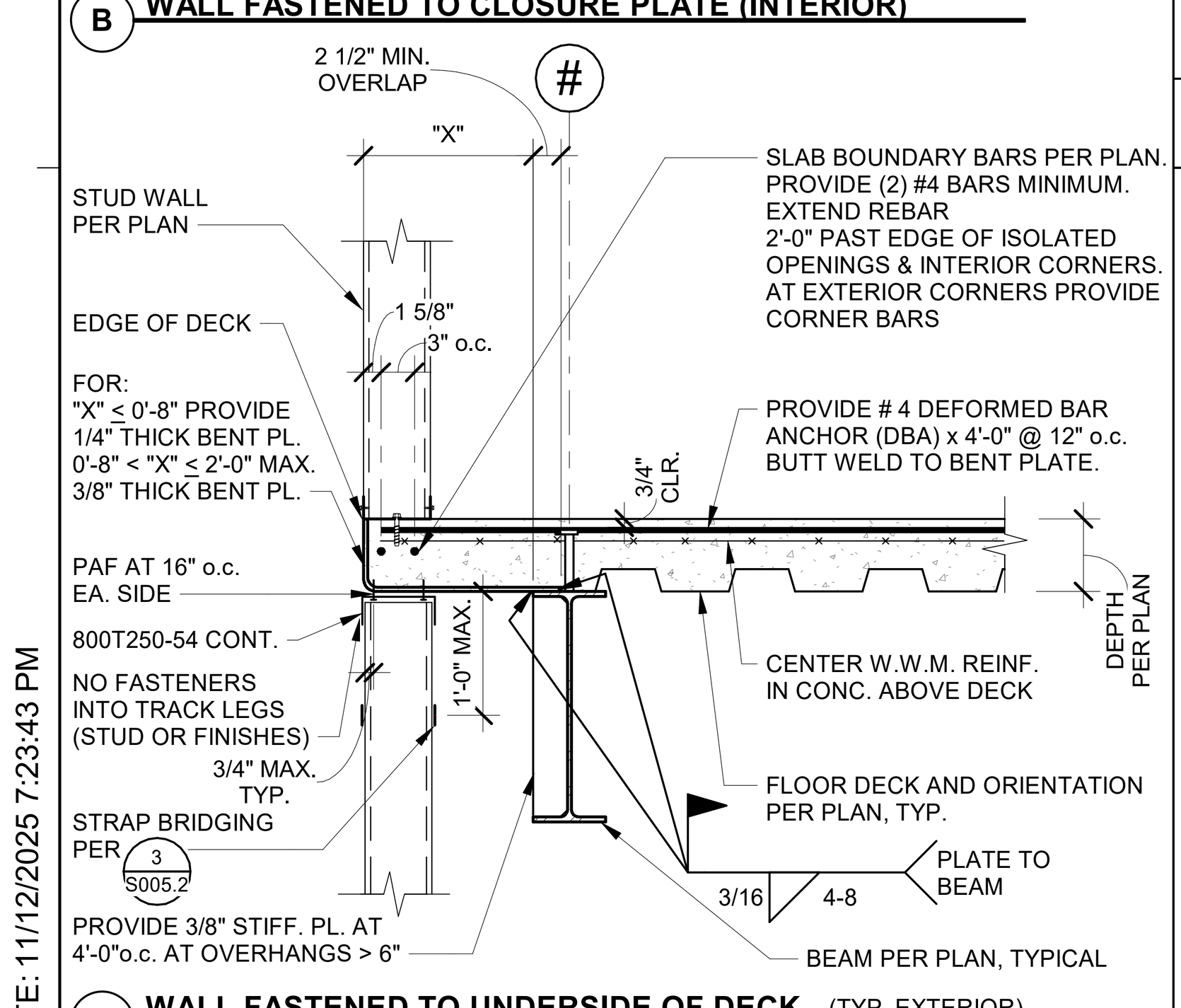

CONDUIT WITHIN MTL. DECK — 1" = 1'-0" — 24

NOTE:
FOR ITEMS SHOWN BUT NOT NOTED, SEE 14/S007.2

NOTES:
1. 1 1/4" DIA. MAX. CONDUIT.
2. (2) CONDUIT TOGETHER MAX. AT 10'-0" o.c. MIN.
3. DO NOT STACK CROSSING CONDUIT WITH REINF. (WWR OK) SINGLE CONDUIT WITH REINF. OK.

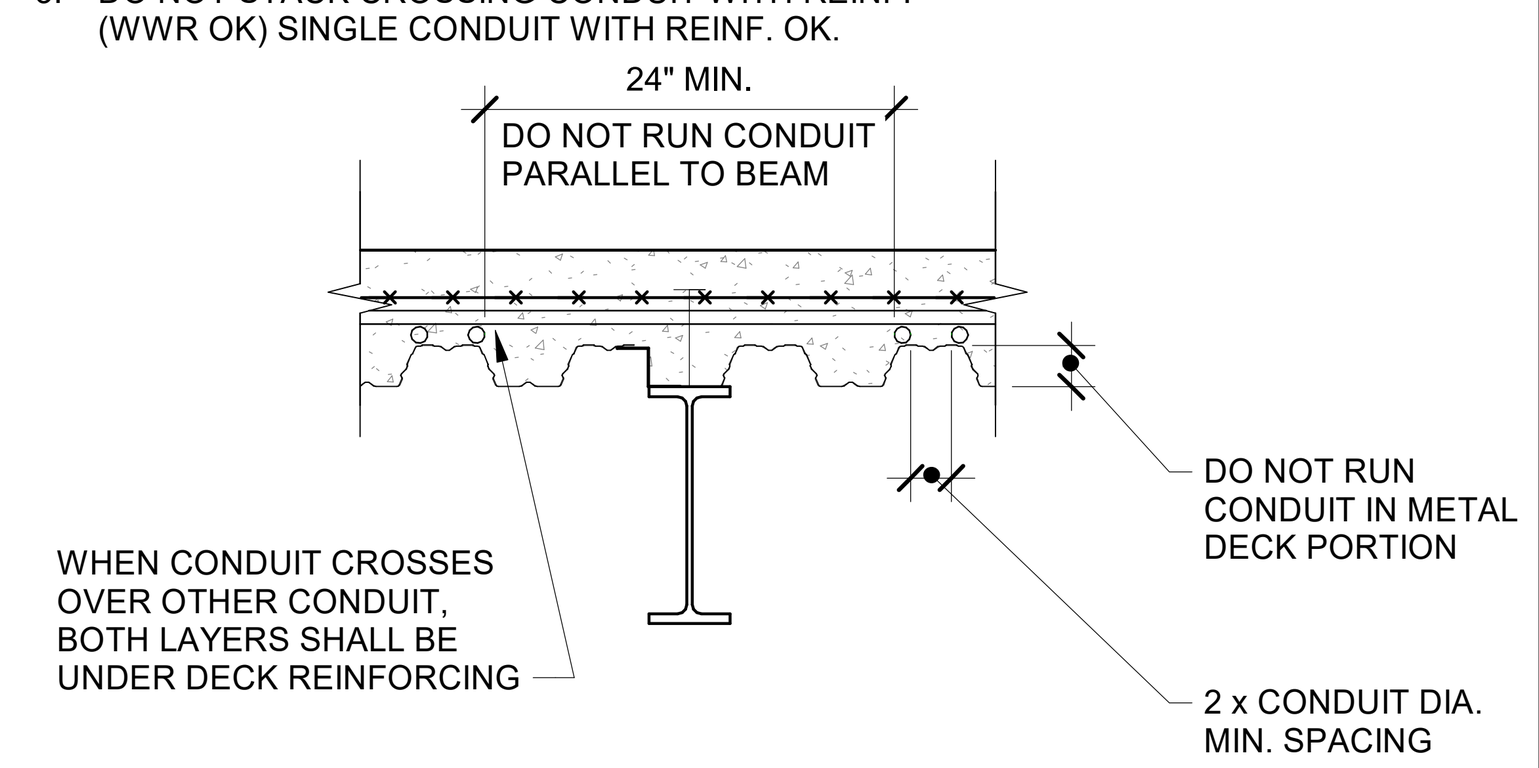

TYPICAL AT METAL DECK PARALLEL TO BEAM

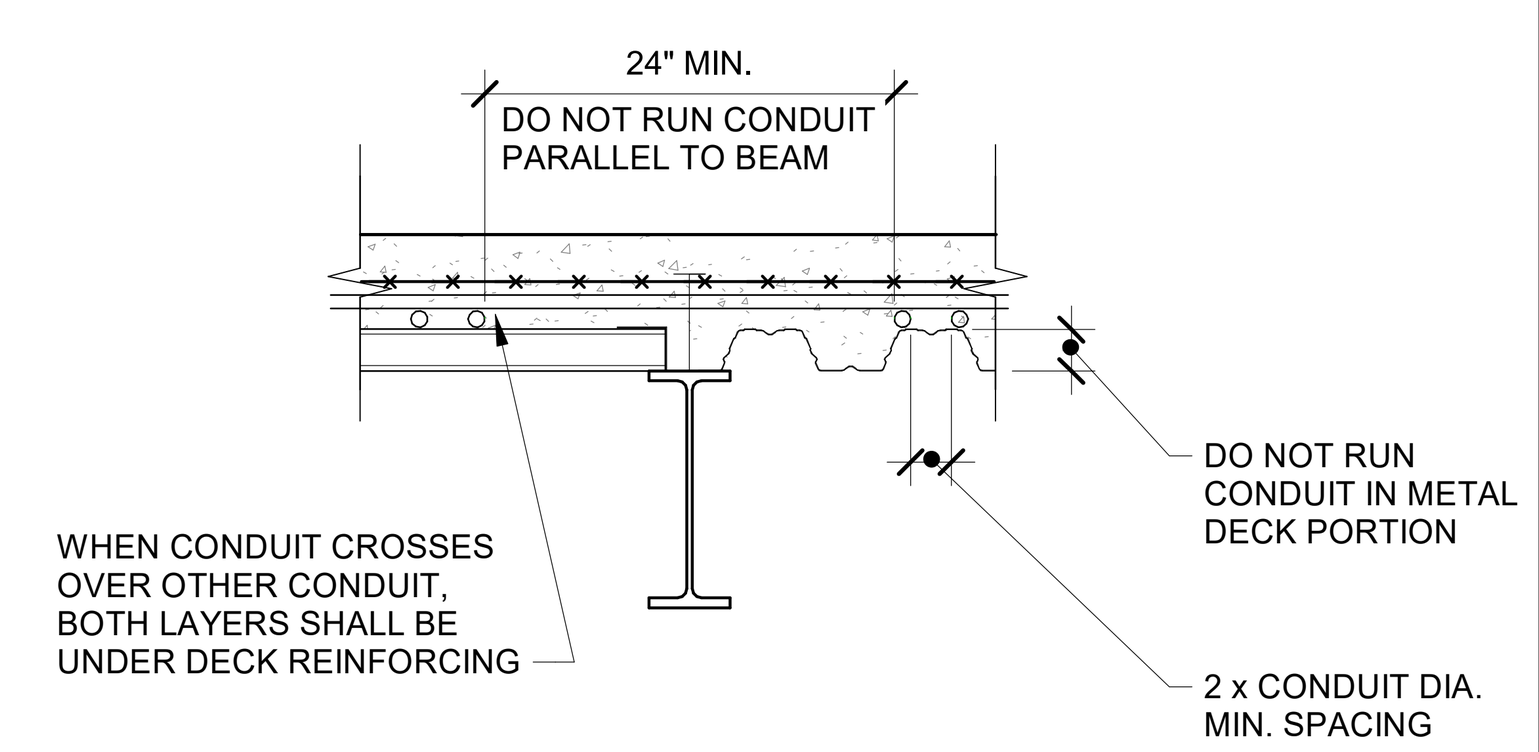

TYPICAL AT METAL DECK TRANSITION AT BEAM

FLOOR BOX AT MTL. DECK — 1" = 1'-0" — 19

NOTE:
FOR ITEMS SHOWN BUT NOT NOTED, SEE 14/S007.2

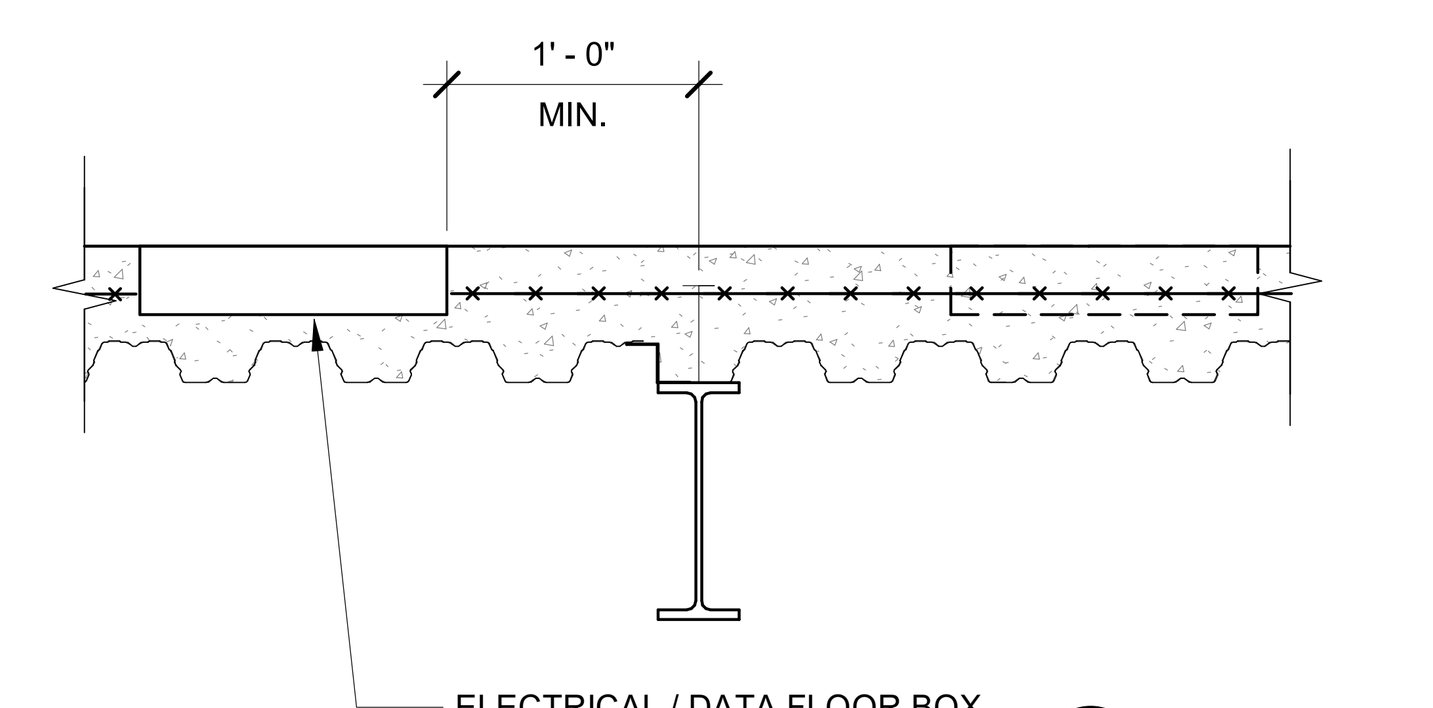

TYPICAL AT METAL DECK PARALLEL TO BEAM AT FLOOR BOX

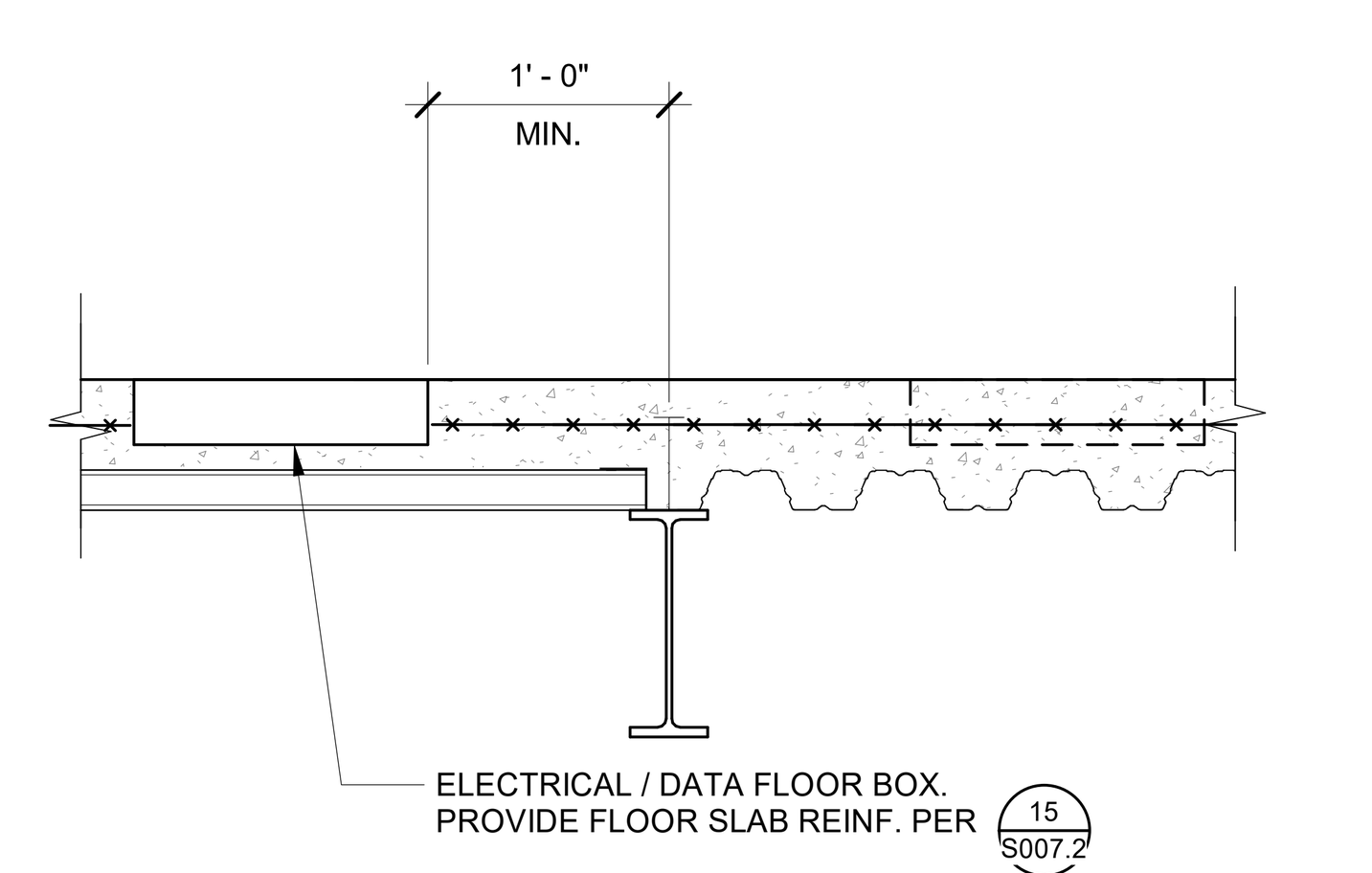

TYPICAL AT METAL DECK TRANSITION AT BEAM AT FLOOR BOX

STEEL DECK TO BEAM (TOPPED) — N.T.S. — 14

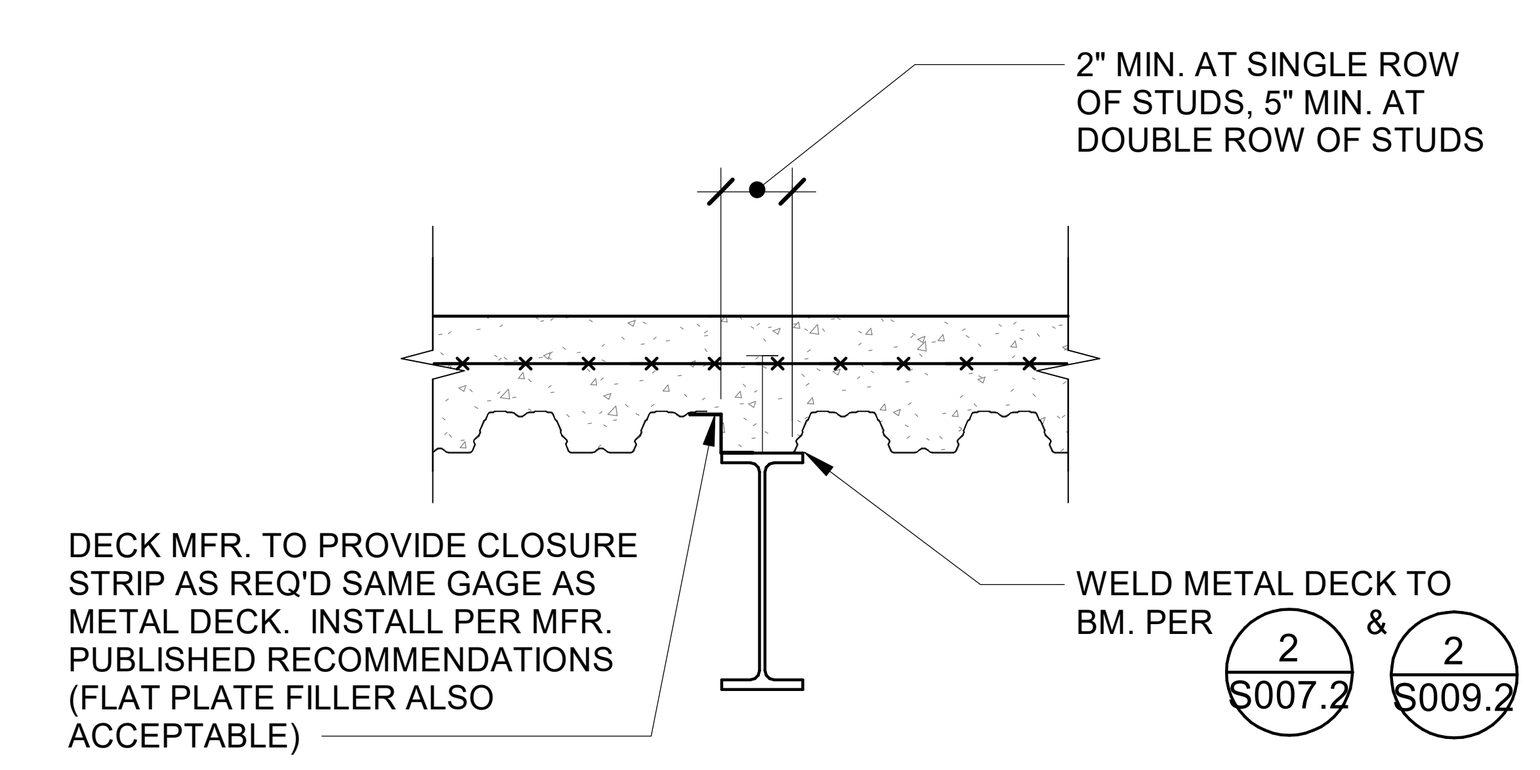

TYPICAL AT METAL DECK PARALLEL TO BEAM

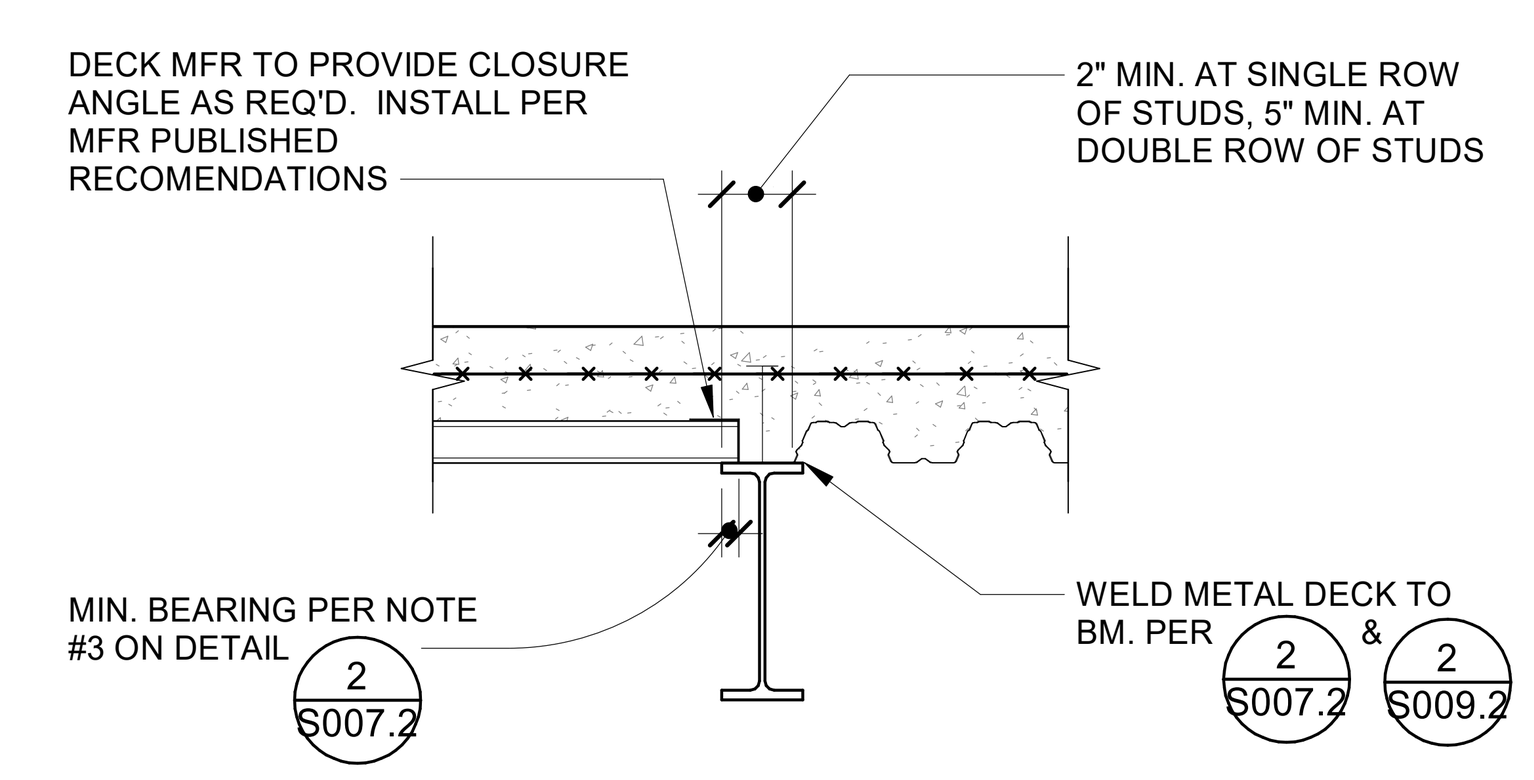

TYPICAL AT METAL DECK TRANSITION AT BEAM

COMPOSITE STUD LAYOUT — 1" = 1'-0" — 3

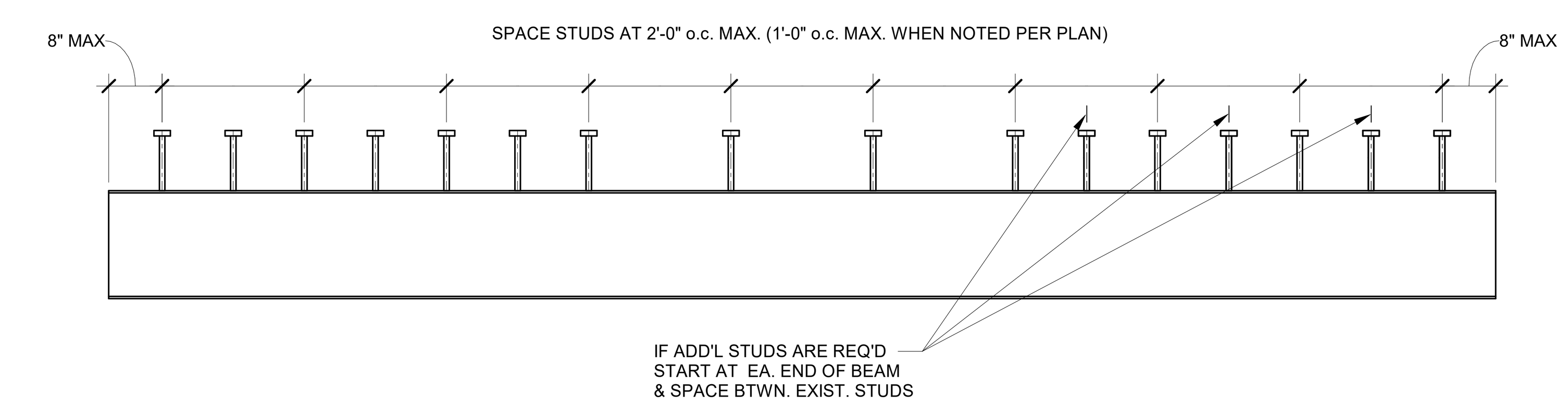

NOTE:
FOR ADDITIONAL STUD LAYOUT INFORMATION, SEE 2/S007.2

COMPOSITE DECK CONSTRUCTION JOINT — N.T.S. — 4

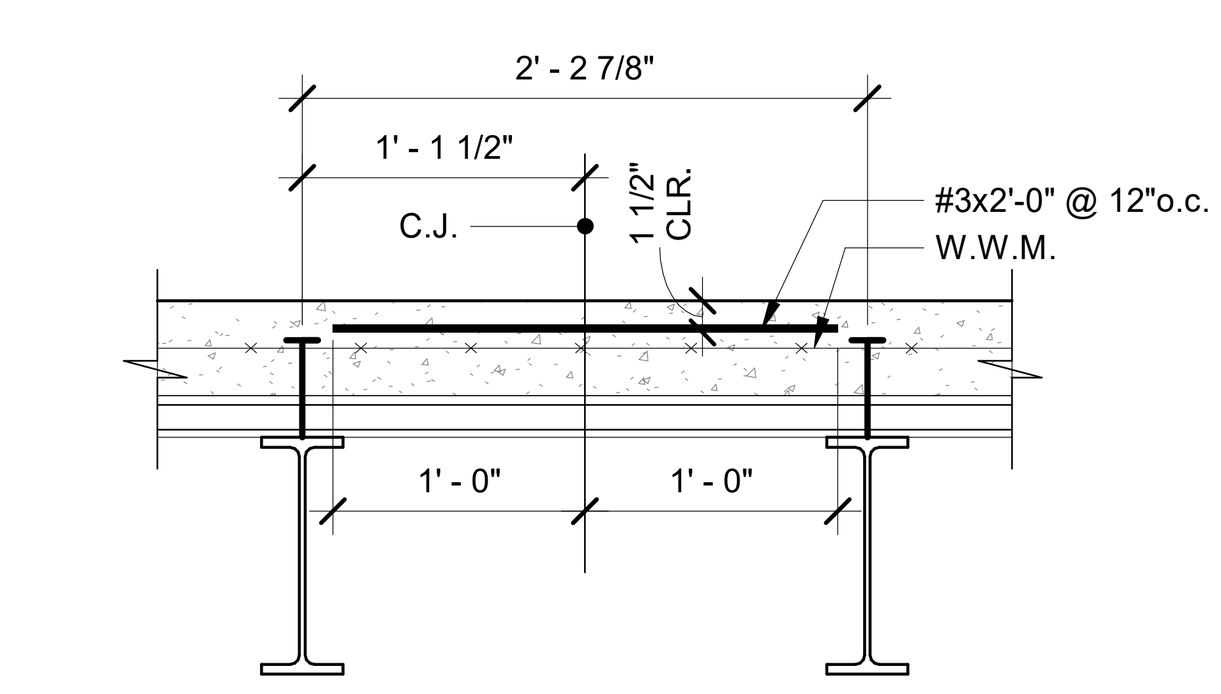

JOINT PERPENDICULAR TO DECK FLUTES

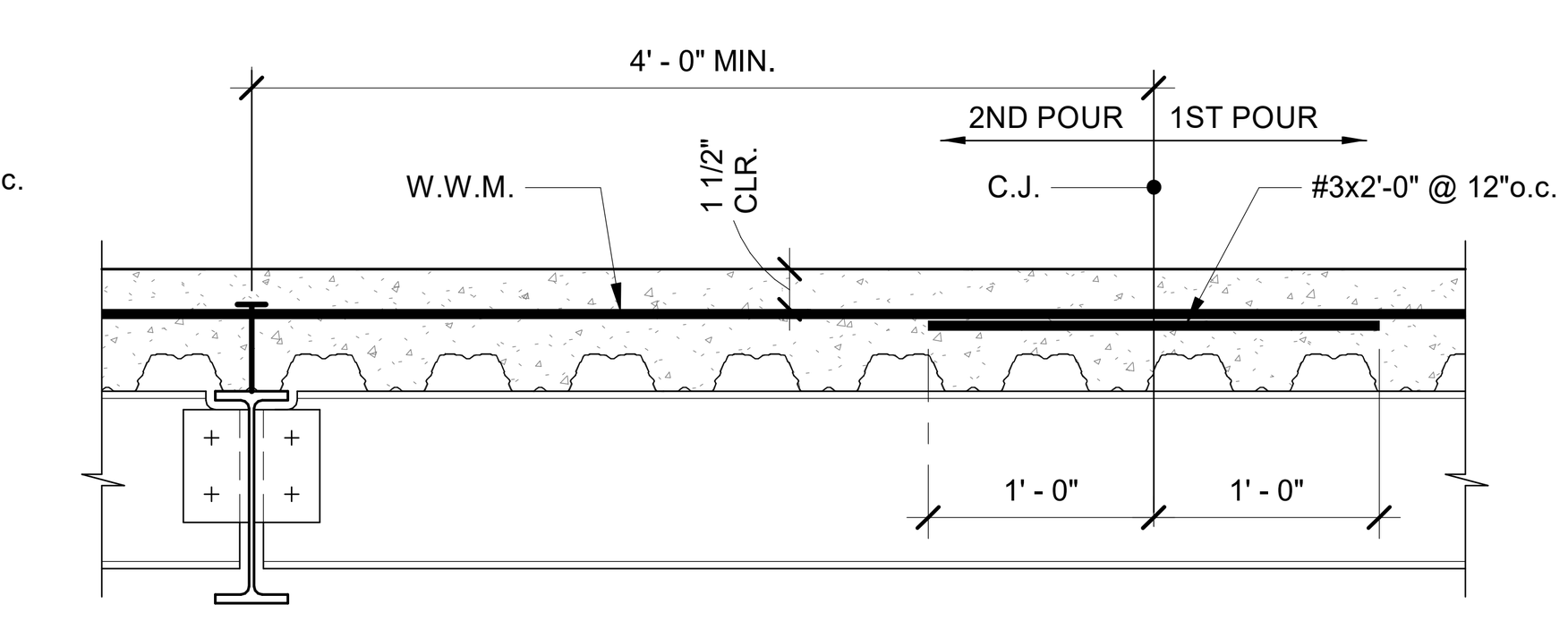

JOINT PARALLEL TO DECK FLUTES

NOTE: ALL REINF. SHALL BE CONT. THRU JOINT

DEPRESSED SLAB AT MTL. DECK — N.T.S. — 25

NOTE:
FOR ITEMS SHOWN BUT NOT NOTED, SEE 4/S007.2 & 14/S007.2

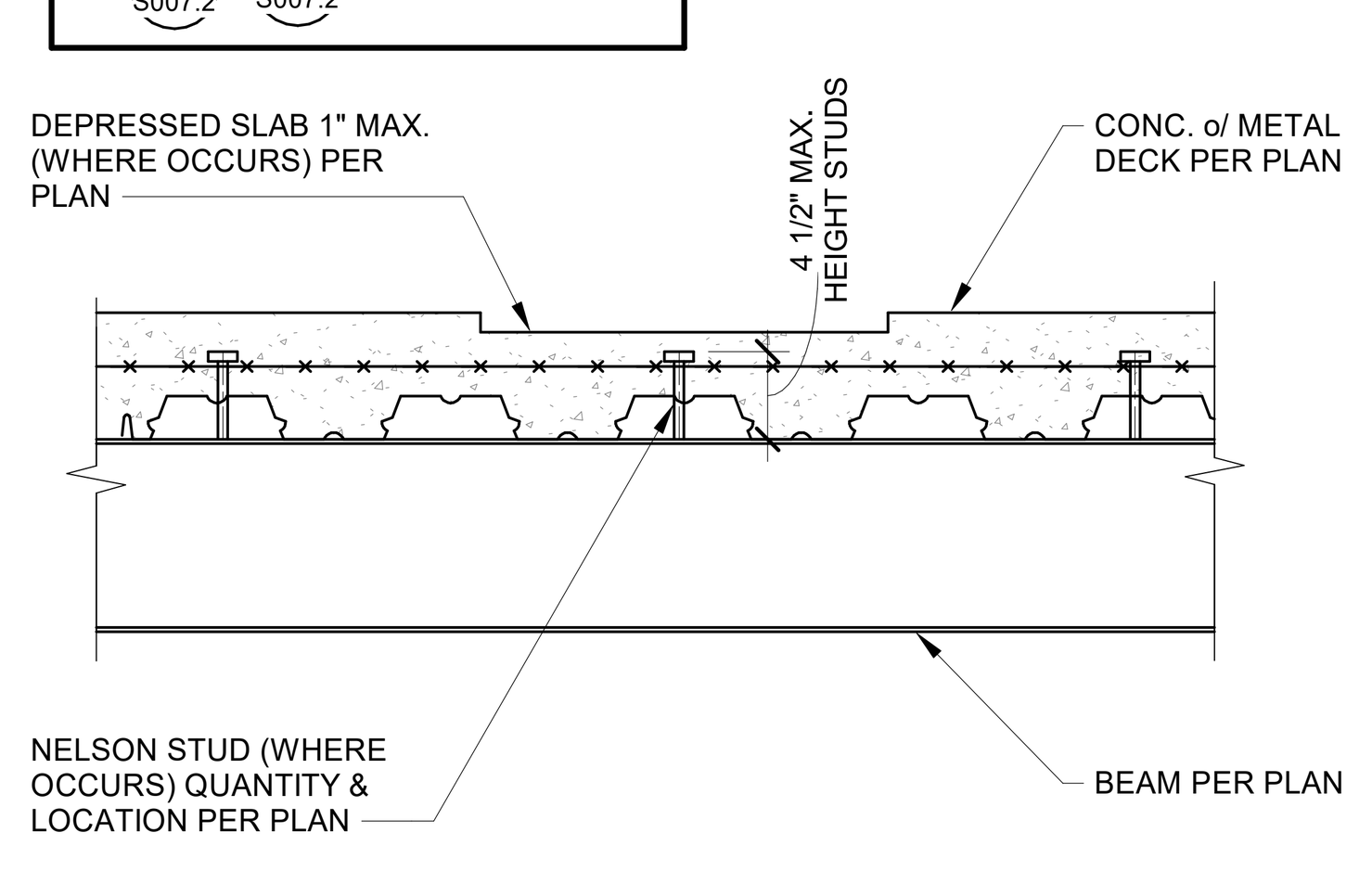

FLOOR EDGE CONNECTION — 3/4" = 1'-0" — 20

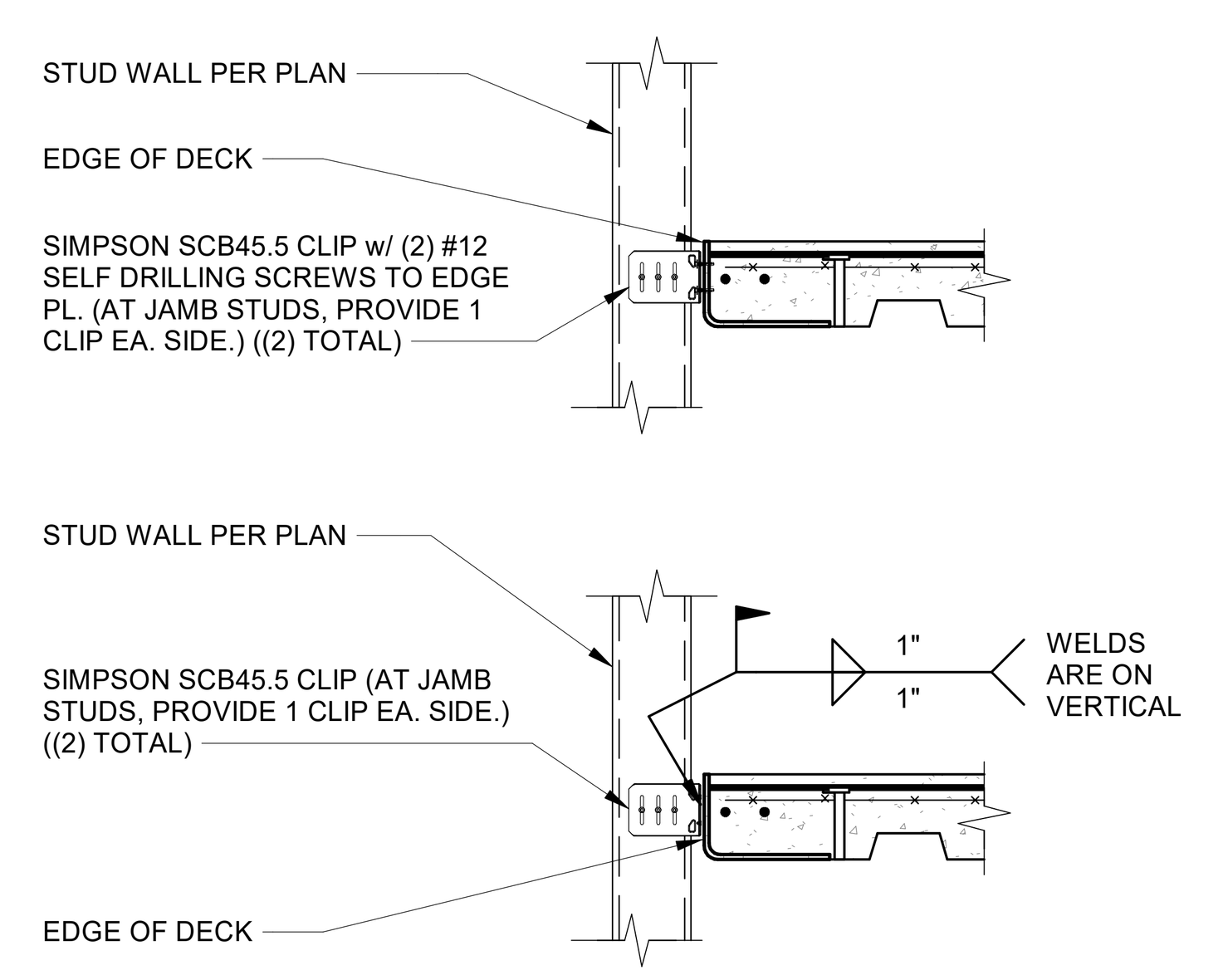

OPENINGS IN CONCRETE — 3/4" = 1'-0" — 15

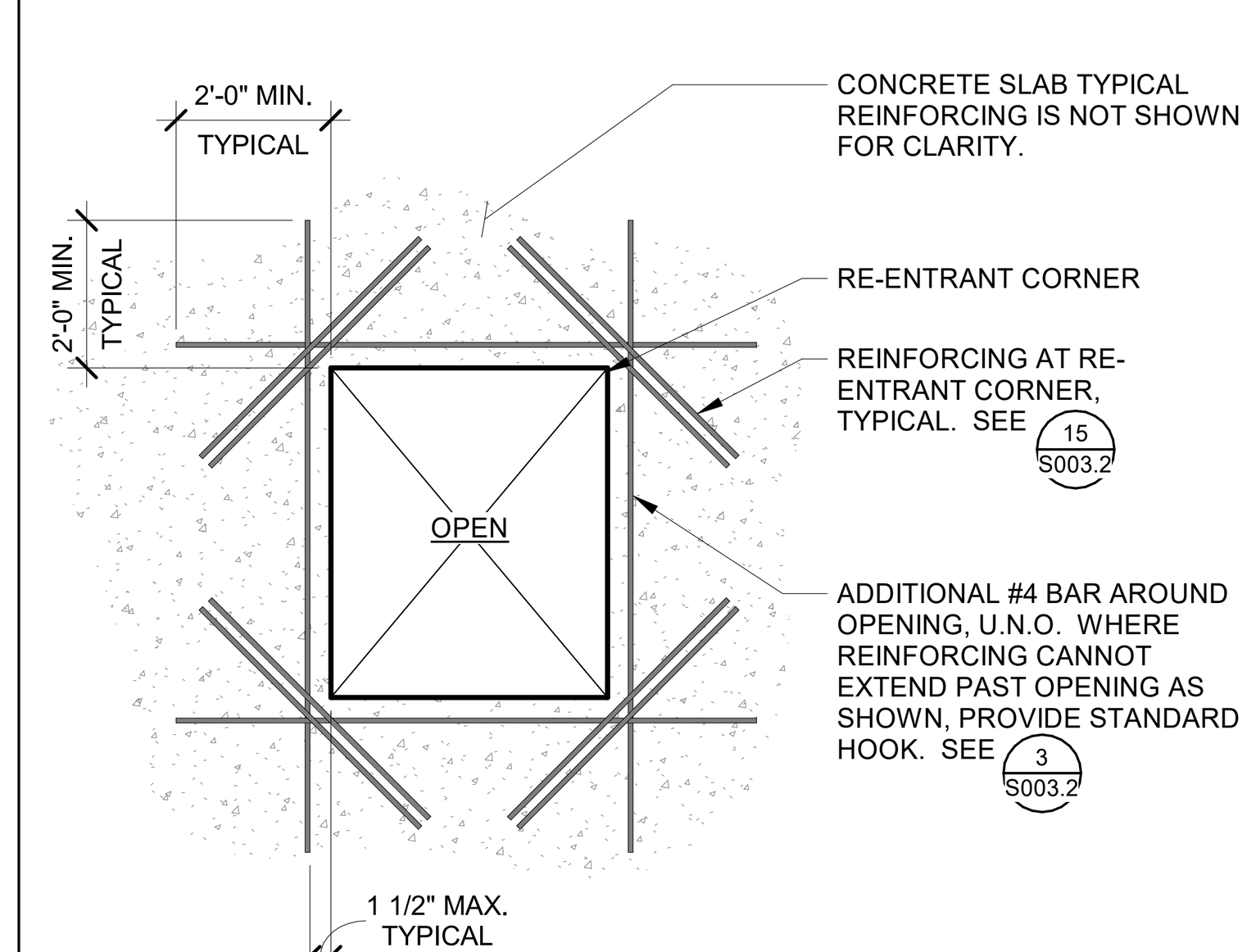

FLOOR PENETRATION REINFORCING — 1" = 1'-0" — 5

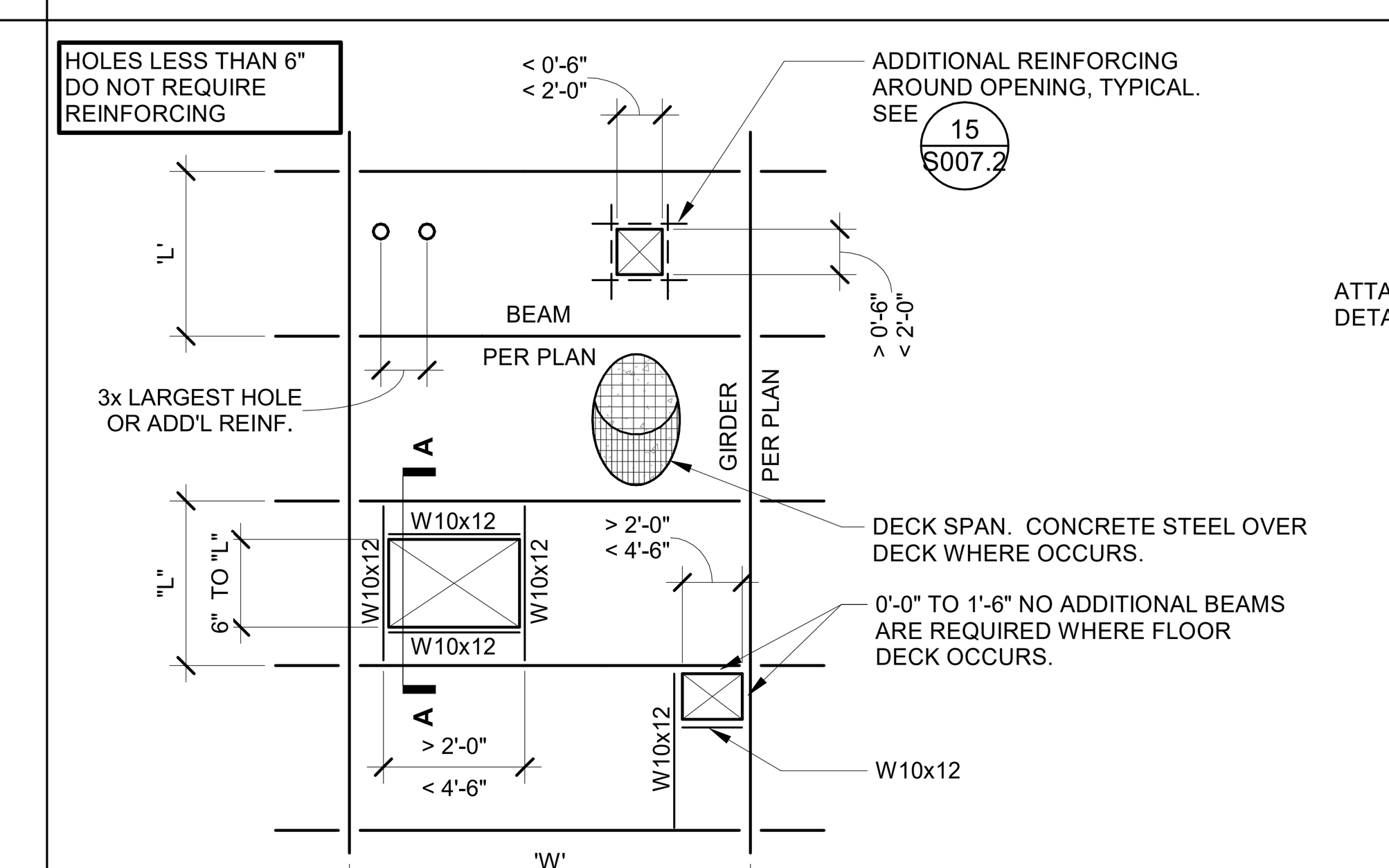

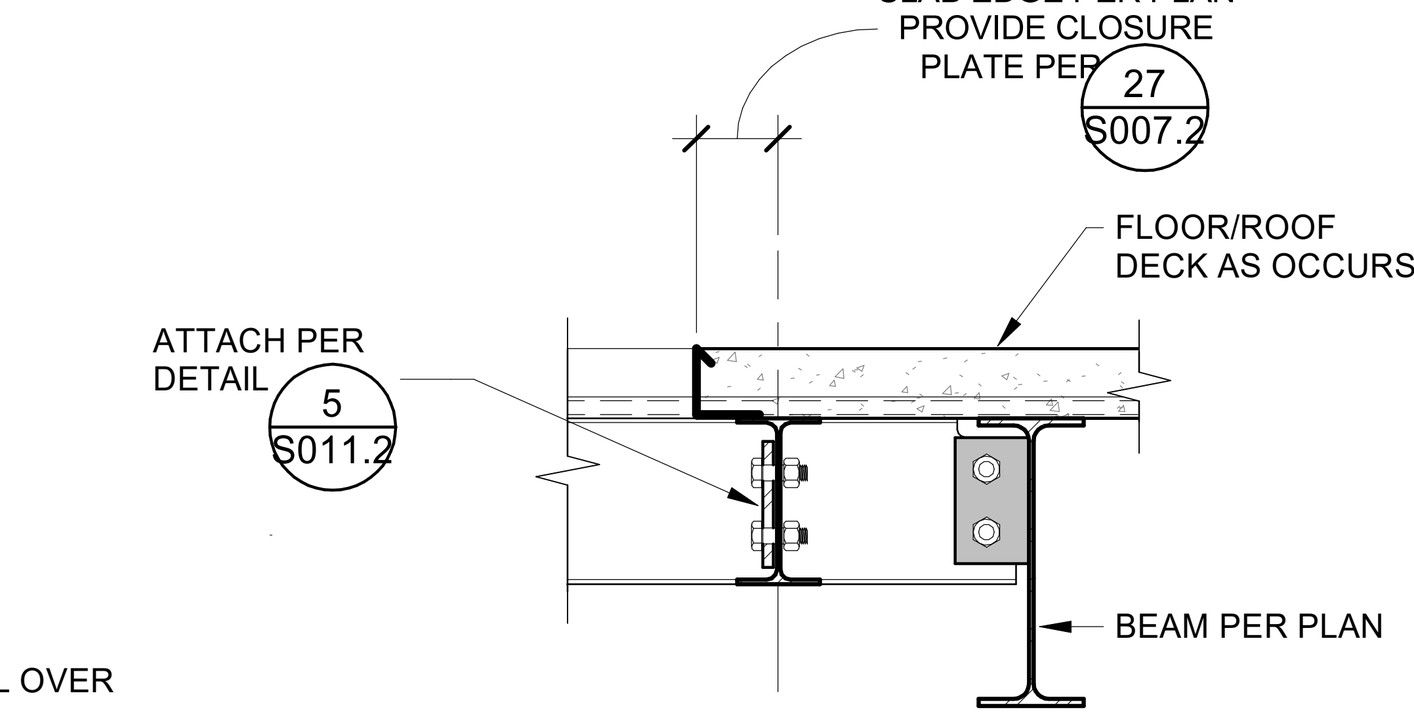

NOTES:
1. BLOCK OUT OPENING BEFORE PLACING CONCRETE, WHERE OCCURS.
2. REMOVE BLOCKOUT AND CUT DECK AFTER CONCRETE HAS CURED, WHERE OCCURS.
3. CONTRACTOR SHALL COORDINATE OPENING SIZE AND LOCATION WITH MECHANICAL AND ELECTRICAL CONTRACTORS AND ARCHITECTURAL DRAWINGS.

IDENTIFICATION STAMP
DIV. OF THE STATE ARCHITECT
APP: 02-122821 INC: 2
REVIEWED FOR
SS ☑ FLS ☑ ACS ☑
DATE: 11/20/2025

Teter, Inc. expressly reserves its common law copyright and other property rights in these plans. This document, the ideas and designs incorporated herein, as an instrument of professional service, is not to be used in whole or in part, for any other project without prior written authorization.

MARK	DATE	DESCRIPTION
A	11/13/2025	DSA BACKCHECK

REGISTERED PROFESSIONAL ENGINEER ERIC S. BAILEY No. S5609 STRUCTURAL STATE OF CALIFORNIA

TETER, INC.
FRESNO HEADQUARTERS
VISALIA | BAKERSFIELD | MODESTO | SAN LUIS OBISPO
ARCHITECTS ENGINEERS CONNECTED
TETER

VISALIA CAMPUS UNIVERSITY CENTER
COLLEGE OF THE SEQUOIAS
915 S. MOONEY BLVD
VISALIA, CALIFORNIA

DRAWING TITLE
TYPICAL DETAILS - METAL DECK

PROJECT NO.
22-12498

DRAWING
S007.2

\\tetr-file1\Users\luis.valtierra\Documents\12498-S-UC_luis.valtierra.rvt

PLOT DATE: 11/12/2025 7:23:43 PM

\\tet-file1\Users\lus.valtierra\Documents\12498-S-UC_lus.valtierra.rvt

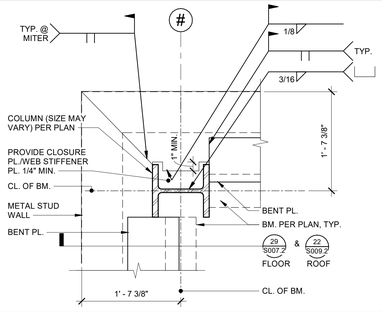

DETAIL N.T.S. 21

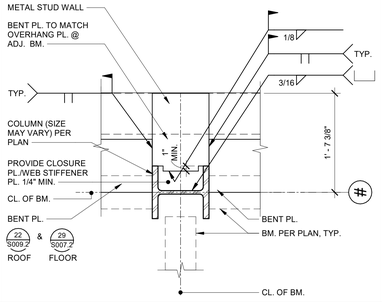

DETAIL N.T.S. 22

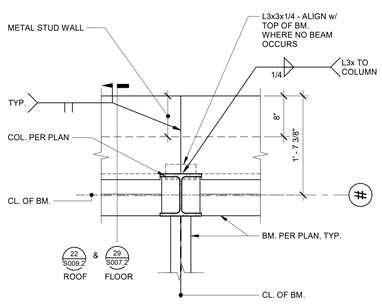

DETAIL N.T.S. 23

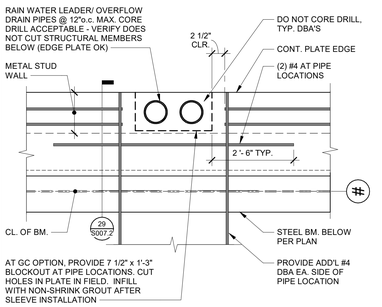

DETAIL 1" = 1'-0" 24

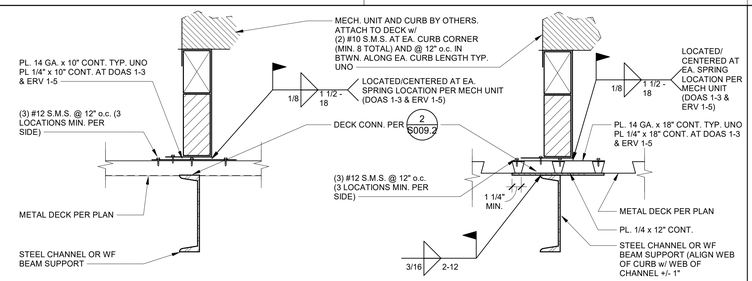

A **DECK PERPENDICULAR TO SUPPORTS**

B **DECK PARALLEL TO SUPPORT**

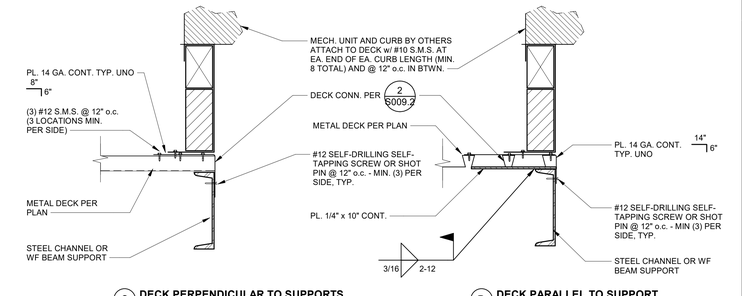

C **DECK PERPENDICULAR TO SUPPORTS**

D **DECK PARALLEL TO SUPPORT**

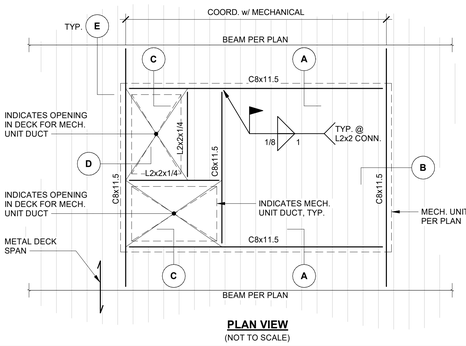

PLAN VIEW
(NOT TO SCALE)

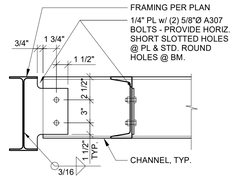

E **CHANNEL TO BEAM**

NOTE:
1. STEEL DECK TO BE PLACED / INCLUDED UNDER MECH. UNIT.
2. L2x2 MEMBERS TO BE 1/4" MIN. FROM DUCT.
3. DECK TO BE CUT WITHIN 1/4", BUT NOT IN CONTACT WITH DUCT.
4. WELD DECK AROUND OPENING PER 2 S009.2
5. WHERE C8x IS OMITTED DUE TO PROXIMITY OF WF BEAM, ATTACH L2x2 PER 8 S008.2

TYP. MECH CURB ATTACHMENT AT METAL DECK N.T.S. 13

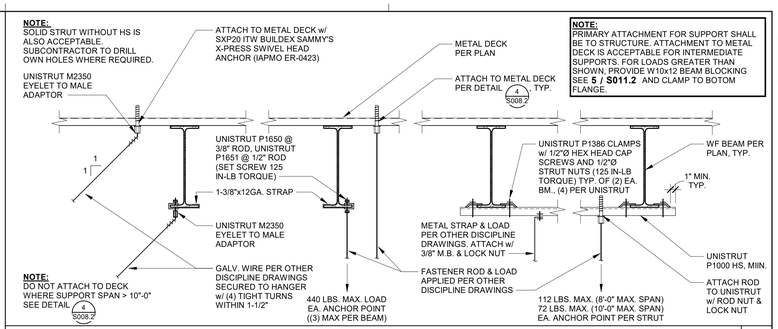

MISCELLANEOUS HANGING CONNECTIONS N.T.S. 1

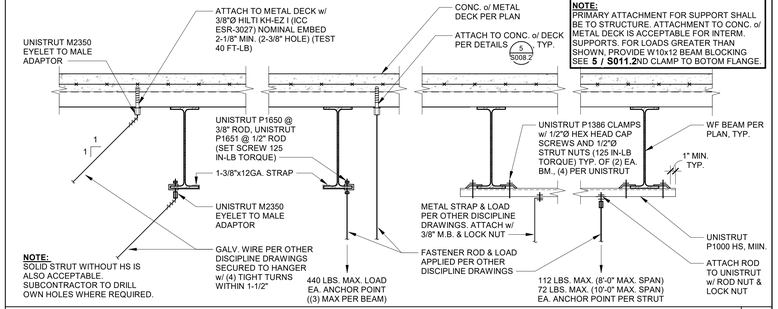

MISCELLANEOUS HANGING CONNECTIONS N.T.S. 2

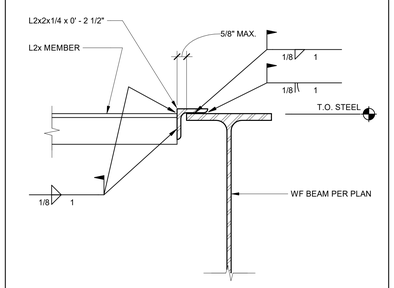

FRAMING AT ROOF DECK OPENING 3" = 1'-0" 8

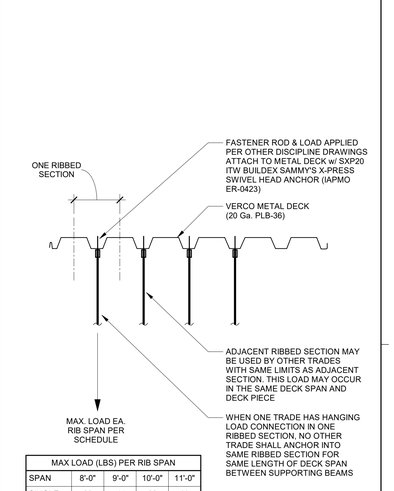

MAX LOAD (LBS) PER RIB SPAN				
SPAN	8'-0"	9'-0"	10'-0"	11'-0"
SINGLE	69	44	22	X
DOUBLE	98	64	34	X
TRIPLE	117	86	58	34

NOTE:
'X' = DO NOT ATTACH TO DECK

MISCELLANEOUS HANGING LOAD N.T.S. 4

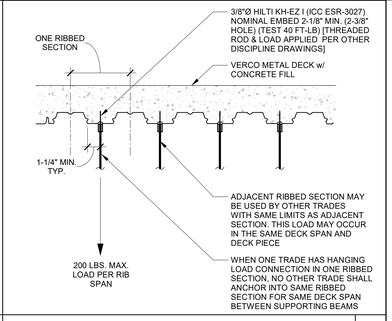

MISCELLANEOUS HANGING LOAD N.T.S. 5

IDENTIFICATION STAMP
DIV. OF THE STATE ARCHITECT
APP: 02-122821 INC: 2
REVIEWED FOR
SS ☑ FLS ☑ ACS ☑
DATE: 11/20/2025

Teter, Inc. expressly reserves its common law copyright and other property rights in these plans. This document, the ideas and designs incorporated herein, as an instrument of professional service, is not to be used in whole or in part, for any other project without prior written authorization.

MARK	DATE	DESCRIPTION
A.	11/13/2025	DSA BACKCHECK

REGISTERED PROFESSIONAL ENGINEER LUS A. VALTIERRA No. 55659 STRUCTURAL STATE OF CALIFORNIA

TETER, INC.
FRESNO HEADQUARTERS
VISALIA | BAKERSFIELD | MODESTO | SAN LUIS OBISPO
ARCHITECTS ENGINEERS CONNECTED

VISALIA CAMPUS UNIVERSITY CENTER
COLLEGE OF THE SEQUOIAS
915 S. MOONEY BLVD
VISALIA, CALIFORNIA

DRAWING TITLE
TYPICAL DETAILS - METAL DECK

PROJECT NO.
22-12498

DRAWING
S008.2

PLOT DATE: 11/12/2025 7:23:48 PM

\\tetr-file1\Users\luis.valtierra\Documents\12498-S-UC_luis.valtierra.rvt
PLOT DATE: 11/12/2025 7:23:52 PM

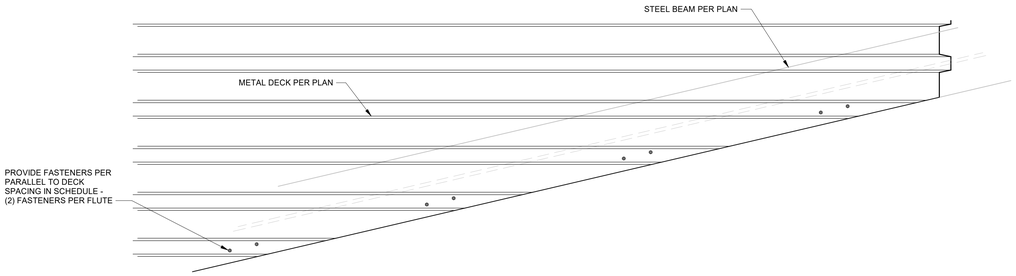

ROOF DECK AT SKEWED SUPPORT — 1 1/2" = 1'-0" — 16

ROOF DECK						
DECK			ATTACHMENT			
MARK	PROFILE	GAGE	⊥ TO DECK	∥ TO DECK	SIDE LAPS	REMARKS
B1	VERCO PLB-36	18	4 SHOT PIN PATTERN	SHOT PIN @ 12" O.C.	VSC2 @ 18" O.C.	COMPLY W/ IAPMO UES REPORT ES-0218 (ISSUED 07/11/2019, REVISED 06/2025)
B2	VERCO PLB-36	18	4 SHOT PIN PATTERN	SHOT PIN @ 12" O.C.	VSC2 @ 18" O.C.	COMPLY W/ IAPMO UES REPORT ES-0218 (ISSUED 07/11/2019, REVISED 06/2025)

NOTES:

1. WHEREVER POSSIBLE, DECK LAYOUTS SHALL PROVIDE SHEETS OF SUFFICIENT LENGTH TO CONTINUOUS SPAN AT LEAST THREE SPANS. ENDS SHALL TERMINATE OVER A SUPPORT PERP. TO THE DECK SPAN, EXCEPT AT OPENINGS OR BUILDING EDGES WHERE DECKS MAY BE CANTILEVERED.
   A. FOR B1 & B2 DECK: WHERE SINGLE SPAN IS UNAVOIDABLE DUE TO LAYOUT, AT SINGLE SPANS GREATER THAN 9'-0" PROVIDE 18GA. DECK WITH SAME FASTENING PATTERN.
   B. FOR B2 DECK: SINGLE SPAN WITH 18GA. IS LIMITED TO 10'-0" MAX. WITH SAME FASTENING PATTERN.
2. DECK SHALL HAVE A MINIMUM OF 2" BEARING AT ALL SUPPORTING MEMBERS PERPENDICULAR TO DECK SPAN AND 2" AT ALL MEMBERS PARALLEL TO DECK SPAN, AT ENDS OF DIAPHRAGM EDGES, DECK SHALL BEAR FULL WIDTH OF BEARING MEMBERS AS SHOWN IN DETAILS. SUPPORT PLATES AND CONN. SHALL BE PROVIDED BY DECKING CONTRACTOR WHERE DETAIL AS SHOWN IS NOT ACHIEVED.
3. WHERE TWO ADJACENT DECK SHEETS ARE SUPPORTED BY ONE FRAMING MEMBER, EACH SHEET SHALL INDIVIDUALLY SATISFY THE REQUIREMENTS OF NOTE 2 AND OF THE ATTACHMENT SCHEDULE (BUTTED ENDS).
4. DO NOT SUSPEND PIPING, MAIN LINE CONDUITS OR OTHER UTILITIES FROM METAL DECK ALONE. SUSPENDED T-BAR CEILING WITH LIGHT FIXTURES AND SOFFIT FRAMING ARE ACCEPTABLE
5. FOR SHOT PIN ATTACHMENT AS SCHEDULED, USE:
   a. HILTI X-EDNK22 AT SUPPORTS 1/8" TO 1/4" THICK
   b. HILTI X-HSN24 AT SUPPORTS 1/8" TO 3/8" THICK
   c. HILTI X-ENP19 AT SUPPORTS 1/4" AND THICKER
   d. PNEUTEK SDK61 AT SUPPORTS 0.113 TO 0.155" THICK
   e. PNEUTEK SDK63 AT SUPPORTS 0.155" TO 0.25" THICK
   f. PNEUTEK K64 AT SUPPORTS 0.187" TO 0.312" THICK
   g. PNEUTEK K66 AT SUPPORTS 0.281" AND THICKER
   NOTE: DIAPHRAGM DESIGN BASED ON HILTI SHOT PINS. PNEUTEK SHOT PINS MAY BE USED IN LIEU OF HILTI SHOT PIN.
6. FOR SCREW ATTACHMENT, PROVIDE SDI RECOGINZED #12 (5 PT.) SELF DRILLING SELF TAPPING SCREWS.

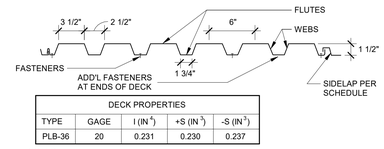

DECK PROPERTIES				
TYPE	GAGE	I (IN^4)	+S (IN^3)	-S (IN^3)
PLB-36	20	0.231	0.230	0.237

NOTES:

1. ASTM A 653 SS GRADE 50 WITH G60 GALVANIZED FINISH. 50,000 PSI YIELD STRENGTH.

VERCO PLB-36

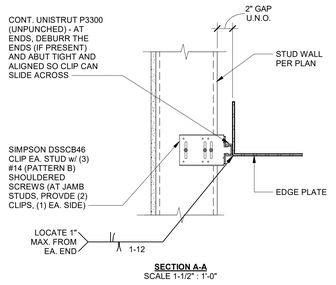

SECTION A-A
SCALE 1-1/2" : 1'-0"

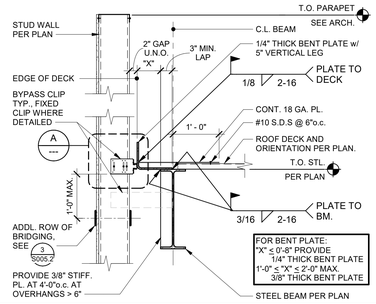

ROOF EDGE CONN. — N.T.S. — 22

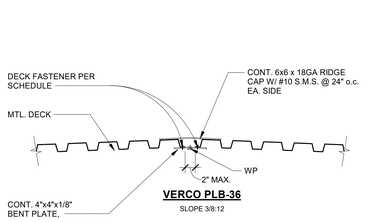

VERCO PLB-36
SLOPE 3/8:12

DETAIL — N.T.S. — 17

ROOF DECK SCHEDULE — N.T.S. — 2

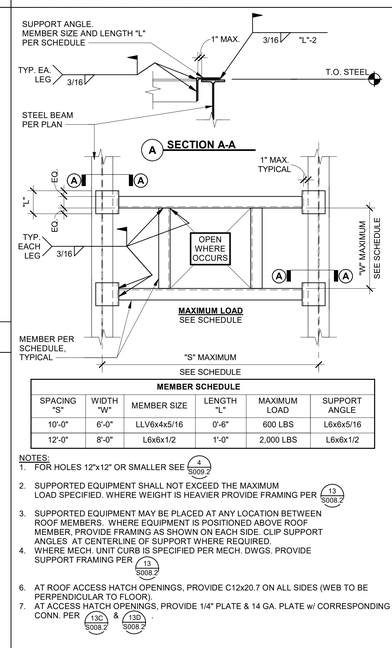

MEMBER SCHEDULE					
SPACING "S"	WIDTH "W"	MEMBER SIZE	LENGTH "L"	MAXIMUM LOAD	SUPPORT ANGLE
10'-0"	6'-0"	LLV6x4x5/16	0'-6"	600 LBS	L6x6x5/16
12'-0"	8'-0"	L6x6x1/2	1'-0"	2,000 LBS	L6x6x1/2

NOTES:
1. FOR HOLES 12"x12" OR SMALLER SEE (4 / S009.2)
2. SUPPORTED EQUIPMENT SHALL NOT EXCEED THE MAXIMUM LOAD SPECIFIED. WHERE WEIGHT IS HEAVIER PROVIDE FRAMING PER (13 / S008.2)
3. SUPPORTED EQUIPMENT MAY BE PLACED AT ANY LOCATION BETWEEN ROOF MEMBERS. WHERE EQUIPMENT IS POSITIONED ABOVE ROOF MEMBER, PROVIDE FRAMING AS SHOWN ON EACH SIDE. CLIP SUPPORT ANGLES AT CENTERLINE OF SUPPORT WHERE REQUIRED.
4. WHERE MECH. UNIT CURB IS SPECIFIED PER MECH. DWGS. PROVIDE SUPPORT FRAMING PER (13 / S008.2)
6. AT ROOF ACCESS HATCH OPENINGS, PROVIDE C12x20.7 ON ALL SIDES (WEB TO BE PERPENDICULAR TO FLOOR).
7. AT ACCESS HATCH OPENINGS, PROVIDE 1/4" PLATE & 14 GA. PLATE w/ CORRESPONDING CONN. PER (13C / S008.2) & (13D / S008.2).

FRAMING AT ROOF DECK OPENING — N.T.S. — 14

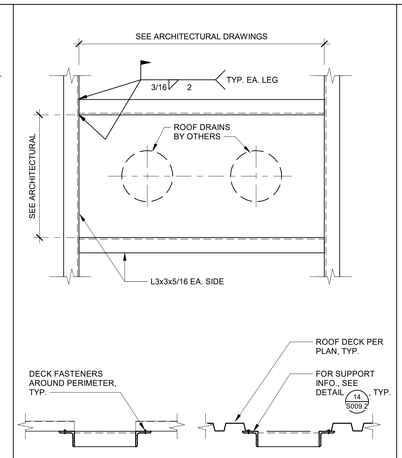

ROOF DRAIN DECK OPENING — N.T.S. — 9

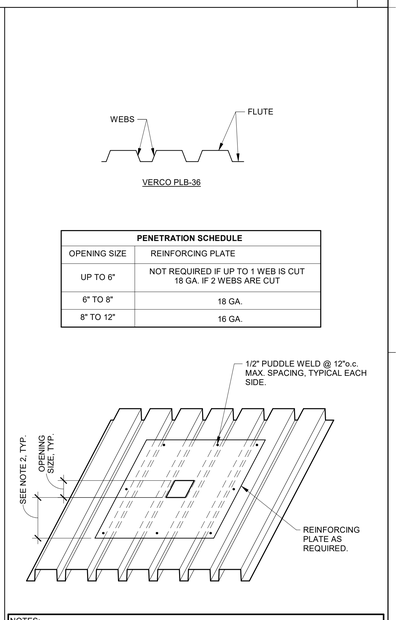

PENETRATION SCHEDULE	
OPENING SIZE	REINFORCING PLATE
UP TO 6"	NOT REQUIRED IF UP TO 1 WEB IS CUT 18 GA. IF 2 WEBS ARE CUT
6" TO 8"	18 GA.
8" TO 12"	16 GA.

NOTES:
1. DETAIL APPLIES TO ROOF DECK PENETRATIONS ONLY & OPENINGS UP TO 12".
2. EXTEND PLATE 12" MINIMUM BEYOND EDGE OF OPENING, TYPICAL ALL SIDES.

PLATE REINFORCED DECK OPENING — 3/4" = 1'-0" — 4

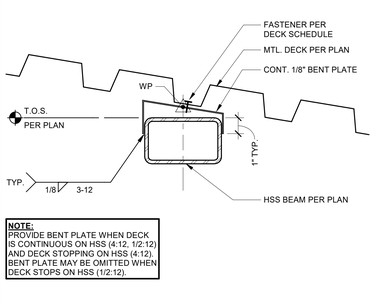

NOTE:
PROVIDE BENT PLATE WHEN DECK IS CONTINUOUS ON HSS (4:12, 1/2:12) AND DECK STOPPING ON HSS (4:12), BENT PLATE MAY BE OMITTED WHEN DECK STOPS ON HSS (1/2:12).

SLOPED DECK TO HSS BEAM — N.T.S. — 20

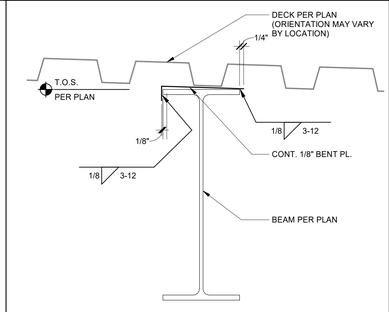

SLOPED DECK TO BEAM — N.T.S. — 15

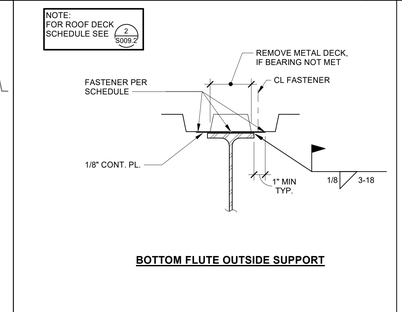

BOTTOM FLUTE OUTSIDE SUPPORT

STEEL DECK TO BEAM (UNTOPPED) — N.T.S. — 10

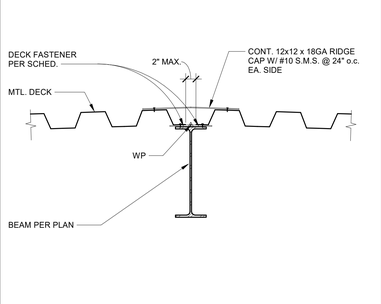

TYP. MTL. DECK AT RIDGE — N.T.S. — 5

IDENTIFICATION STAMP
DIV. OF THE STATE ARCHITECT
APP: 02-122821 INC: 2
REVIEWED FOR
SS ☑ FLS ☑ ACS ☑
DATE: 11/20/2025

Teter, Inc. expressly reserves its common law copyright and other property rights in these plans. This document, the ideas and designs incorporated herein, as an instrument of professional service, is not to be used in whole or in part, for any other project without prior written authorization.

MARK	DATE	DESCRIPTION
A	11/13/2025	DSA BACKCHECK

REGISTERED PROFESSIONAL ENGINEER — LUIS S. VALTIERRA — No. 55609 — STRUCTURAL — STATE OF CALIFORNIA

TETER, INC.
FRESNO HEADQUARTERS
VISALIA | BAKERSFIELD | MODESTO | SAN LUIS OBISPO
ARCHITECTS ENGINEERS CONNECTED

VISALIA CAMPUS UNIVERSITY CENTER
COLLEGE OF THE SEQUOIAS
915 S. MOONEY BLVD
VISALIA, CALIFORNIA

DRAWING TITLE
TYPICAL DETAILS - METAL DECK

PROJECT NO.
22-12498

DRAWING
S009.2

\\tetr-file1\Users\luis.valtierra\Documents\12498-S-UC_luis.valtierra.rvt

PLOT DATE: 11/12/2025 7:23:59 PM

IDENTIFICATION STAMP
DIV. OF THE STATE ARCHITECT
APP: 02-122821 INC: 2
REVIEWED FOR
SS ☑ FLS ☑ ACS ☑
DATE: 11/20/2025

Teter, Inc. expressly reserves its common law copyright and other property rights in these plans. This document, the ideas and designs incorporated herein, as an instrument of professional service, is not to be used in whole or in part, for any other project without prior written authorization.

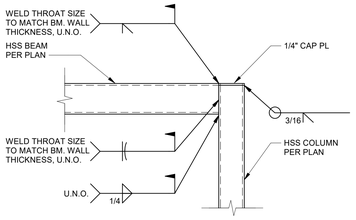

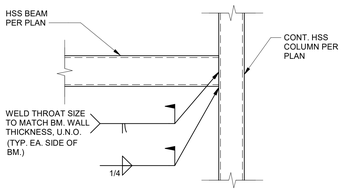

NOTES:
1. HSS DEPTH VARY, TYP.
2. HORIZ. BM.'s SHOWN, SLOPING BM.'s SIM., TYP.
3. SKEWED BM.'s SIM.
4. SINGLE BM. SHOWN, MULTIPLE BM.'s SIM.
5. DECK (WHERE OCCURS) NOT SHOWN

HSS TO HSS CONN. N.T.S. 17

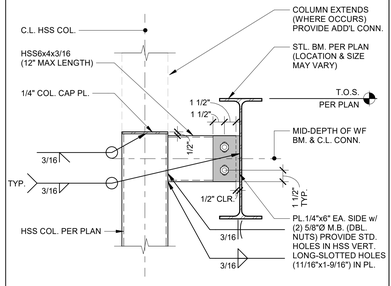

HSS COL. BRACING (SIDE VIEW) N.T.S. 18

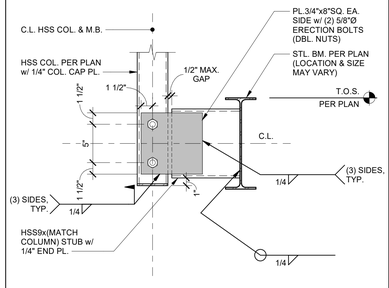

HSS COL. SUPPORT (SIDE VIEW) N.T.S. 19

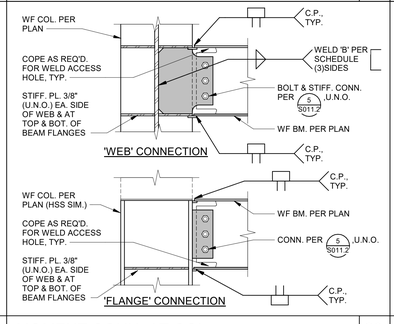

MOMENT CONN. AT COL. N.T.S. 20

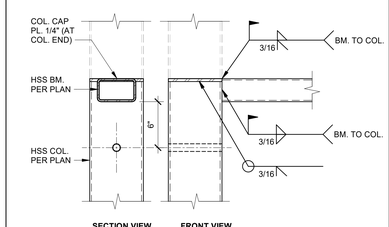

A1 **HSS BEAM TO HSS COLUMN (WIDER COLUMN)**

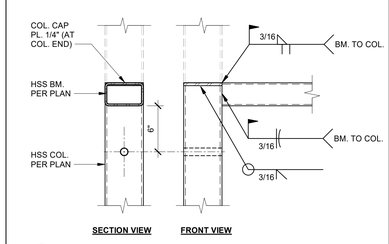

A2 **HSS BEAM TO HSS COLUMN (WITH SAME WIDTH)**

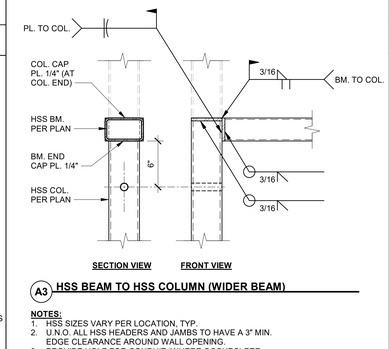

A3 **HSS BEAM TO HSS COLUMN (WIDER BEAM)**

NOTES:
1. HSS SIZES VARY PER LOCATION, TYP.
2. U.N.O. ALL HSS HEADERS AND JAMBS TO HAVE A 3" MIN. EDGE CLEARANCE AROUND WALL OPENING.
3. PROVIDE HOLE FOR CONDUIT (WHERE OCCURS) PER ELECTRICAL DRAWINGS.

HSS BEAM TO HSS COLUMN N.T.S. 13

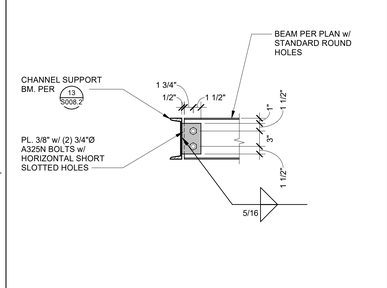

CHANNEL BEAM CONNECTION N.T.S. 14

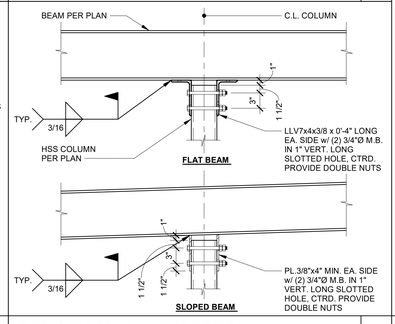

MOMENT CONNECTION @ BEAM N.T.S. 15

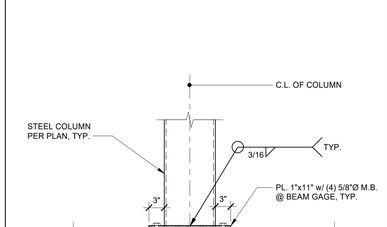

CONTINUOUS STEEL BEAM N.T.S. 7

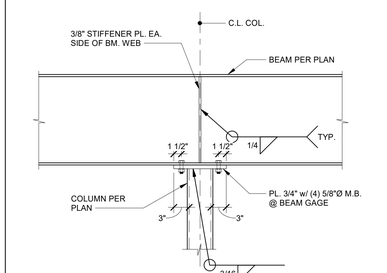

CONTINUOUS STEEL BEAM N.T.S. 8

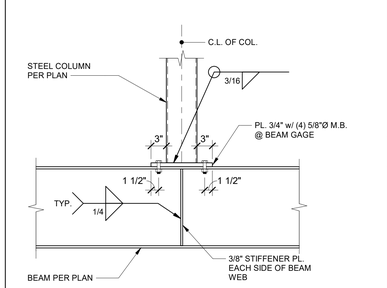

BEAM SUPPORTING COLUMN N.T.S. 9

TOP OF COLUMN SUPPORT 1" = 1'-0" 10

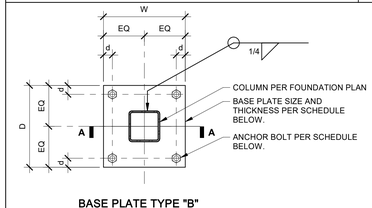

BASE PLATE TYPE "B"

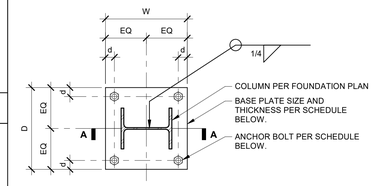

BASE PLATE TYPE "A"

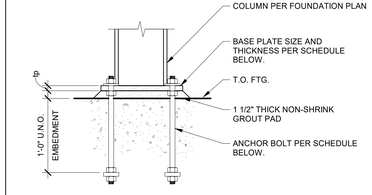

TYPICAL SECTION 'A-A'

STEEL COLUMN PLATE SCHEDULE								
COLUMN	PLATE TYPE	BASE PLATE D	W	tp	d	GRADE	ANCHOR BOLT (1)
W8X	"A"	15"	15"	1"	1 1/2"	A36 (36KSI)	(4) 3/4"Ø
W10X	"A"	17"	17"	1 1/4"	1 1/2"	A36 (36KSI)	(4) 3/4"Ø
W12X	"A"	18"	18"	1 1/4"	1 1/2"	A36 (36KSI)	(4) 3/4"Ø
W14X	"A"	17"	17"	1 1/4"	1 1/2"	A36 (36KSI)	(4) 3/4"Ø
HSS4X4	"B"	10"	10"	3/4"	1 1/2"	A36 (36KSI)	(4) 3/4"Ø
HSS5X5	"B"	11"	11"	3/4"	1 1/2"	A36 (36KSI)	(4) 3/4"Ø
HSS6X6	"B"	12"	12"	3/4"	1 1/2"	A36 (36KSI)	(4) 3/4"Ø

NOTES:
1. FOR ADDITIONAL ANCHOR BOLT REQUIREMENTS, SEE DETAIL 5/S010.2

STEEL COLUMN BASE PLATE 1" = 1'-0" 4

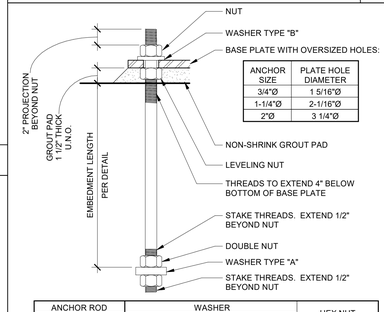

ANCHOR SIZE	PLATE HOLE DIAMETER
3/4"Ø	1 5/16"Ø
1-1/4"Ø	2-1/16"Ø
2"Ø	3 1/4"Ø

ANCHOR ROD SIZE	ANCHOR ROD MATERIAL	WASHER TYPE	WASHER SIZE	WASHER HEX NUT
3/4"Ø	F1554 GRADE 55	A	3"x1/2"x0'-3" PLATE W/ 13/16"Ø HOLE CENTERED	ASTM A563
		B	2"x1/4" PLATE* W/ 13/16"Ø HOLE CENTERED	
1-1/4"Ø	F1554 GRADE 55	A	3"x1/2"x0'-3" PLATE W/ 1-3/8"Ø HOLE CENTERED	ASTM A563
		B	3"x1/2" PLATE* W/ 1-3/8"Ø HOLE CENTERED	
2"Ø	F1554 GRADE 105	A	5"x5"x0'-1" PLATE W/ 2-1/8"Ø HOLE CENTERED	ASTM A563
		B	5"x0'-1" PLATE* W/ 2-1/8"Ø HOLE CENTERED	

* CIRCULAR OR SQUARE WASHERS MEETING THE WASHER SIZE ARE ACCEPTABLE.

ANCHOR BOLT N.T.S. 5

MARK	DATE	DESCRIPTION
A	11/13/2025	DSA BACKCHECK

TETER, INC.
ARCHITECTS ENGINEERS CONNECTED
FRESNO HEADQUARTERS
VISALIA | BAKERSFIELD | MODESTO | SAN LUIS OBISPO

REGISTERED PROFESSIONAL ENGINEER LUIS A. VALTIERRA No. 55608 STRUCTURAL STATE OF CALIFORNIA

VISALIA CAMPUS UNIVERSITY CENTER
COLLEGE OF THE SEQUOIAS
915 S. MOONEY BLVD
VISALIA, CALIFORNIA

DRAWING TITLE
TYPICAL DETAILS - STEEL

PROJECT NO.
22-12498

DRAWING
S010.2

\\tetr-file1\Users\luis.valtierra\Documents\12498-S-UC_luis.valtierra.rvt

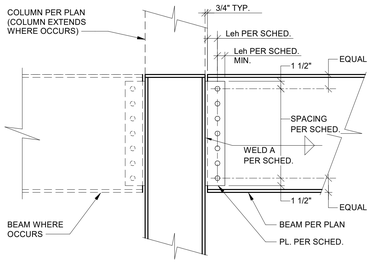

A WIDE FLANGE BEAM TO COLUMN WEB

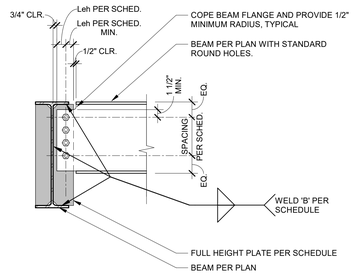

E WF BEAM AT WF BEAM, EQUAL OR SHALLOWER DEPTH

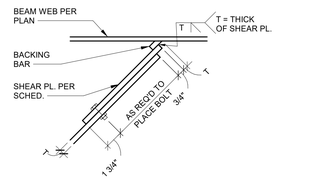

I SKEWED CONNECTION (N.T.S.)

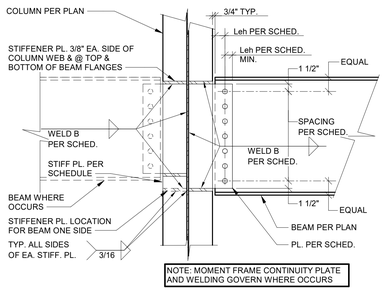

B WIDE FLANGE BEAM TO COLUMN WEB

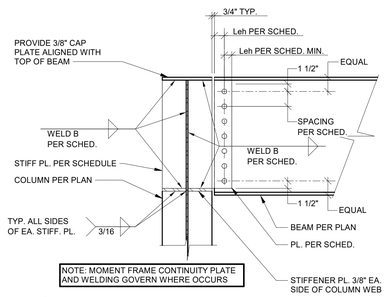

D WIDE FLANGE BEAM TO COLUMN WEB

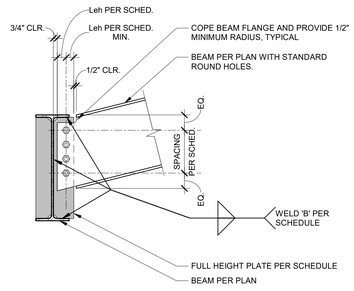

H MAX SKEW 14 DEG. - WF BEAM AT WF BEAM

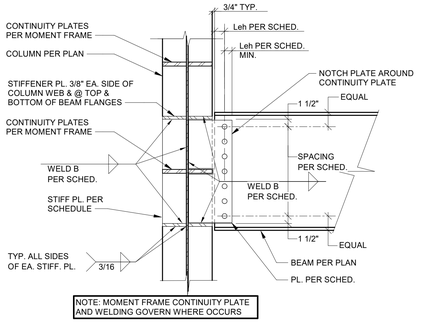

C WIDE FLANGE BEAM TO COLUMN WEB (BEAMS DIFFERENT HEIGHT)

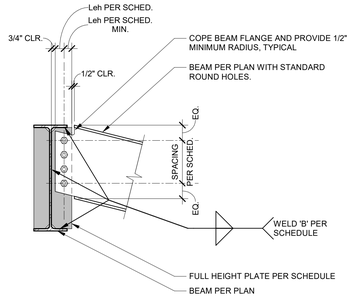

G MAX SKEW 14 DEG. - WF BEAM AT WF BEAM

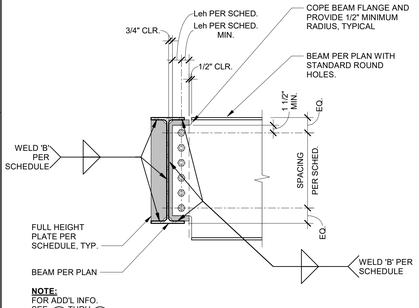

F WF BEAM AT WF BEAM, DEEPER DEPTH

DEMAND CRITICAL (SLIP CRITICAL) CONNECTION SCHEDULE

BEAM SIZE	PLATE		WELD SIZE		WELDS		BOLTS			
	DEPTH	THICKNESS	A	B	C	D	NO.	Ø	SPACING	Leh
W10x	6"	3/8	5/16	5/16	N/A	N/A	(2)	1"	3"	2"
W14x	9"	3/8	5/16	5/16	N/A	N/A	(3)	1"	3"	2"
W16x	9"	3/8	5/16	5/16	N/A	N/A	(4)	1"	3"	2"
W18x	15"	3/8	5/16	5/16	N/A	N/A	(5)	1"	3"	2"
W21x	18"	3/8	5/16	5/16	N/A	N/A	(6)	1"	3"	2"
W24x	18"	1/2	3/8	3/8	N/A	N/A	(6)	1"	3"	2"
W27x	24"	1/2	3/8	3/8	N/A	N/A	(7)	1"	3"	2"
W30x	24"	1/2	3/8	3/8	N/A	N/A	(8)	1"	3"	2"

NOTES:
- FOR SINGLE ROW (UNLESS NOTED OTHERWISE)
- ALL BOLTS SHALL BE A490 SC w/ CLASS B FAYING SURFACE (BLAST CLEANED) U.N.O.
- USE ASTM A572 (GR. 50) PLATE
- ALL WELDS ARE PART OF THE LATERAL FORCES RESISTING SYSTEM (LFRS) AND SHALL CONFORM TO DEMAND CRITICAL REQUIREMENTS - SEE GENERAL NOTES

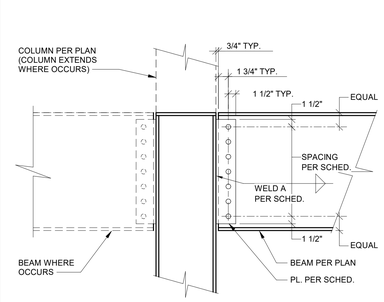

A WIDE FLANGE BEAM TO COLUMN FLANGE

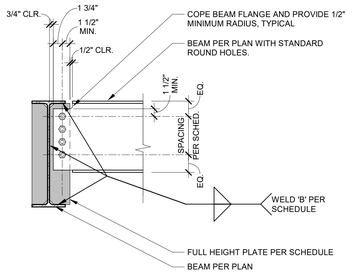

E WF BEAM AT WF BEAM, EQUAL OR SHALLOWER DEPTH

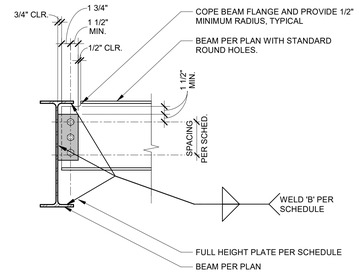

J SHORTENED TAB WF BEAM AT WF BEAM, EQUAL OR SHALLOWER DEPTH

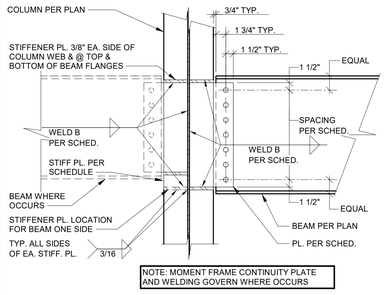

B WIDE FLANGE BEAM TO COLUMN WEB

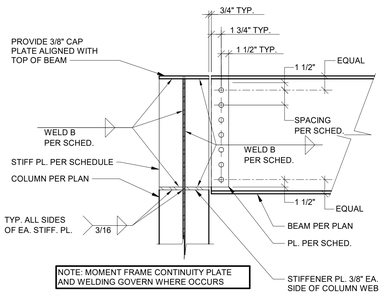

D WIDE FLANGE BEAM TO COLUMN WEB

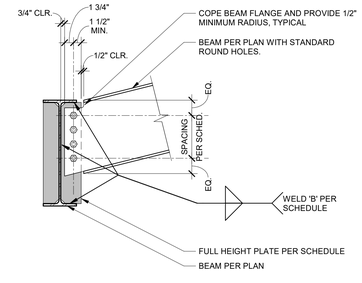

H MAX SKEW 14 DEG. - WF BEAM AT WF BEAM

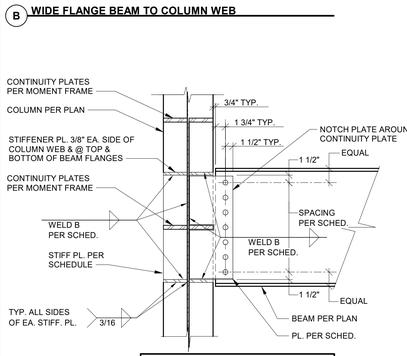

C WIDE FLANGE BEAM TO COLUMN WEB (BEAMS DIFFERENT HEIGHT)

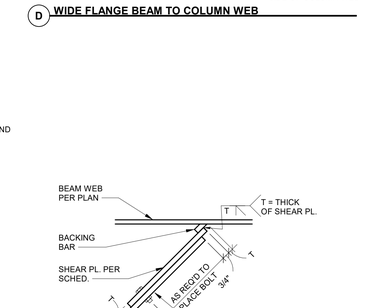

I SKEWED CONNECTION (N.T.S.)

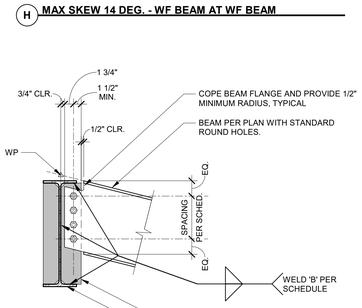

G MAX SKEW 14 DEG. - WF BEAM AT WF BEAM

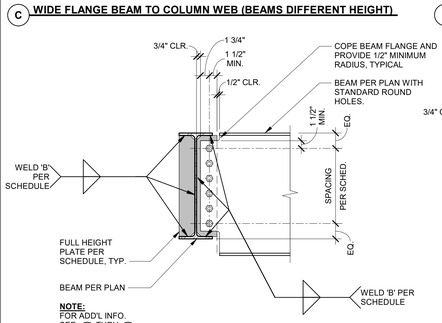

F WF BEAM AT WF BEAM, DEEPER DEPTH

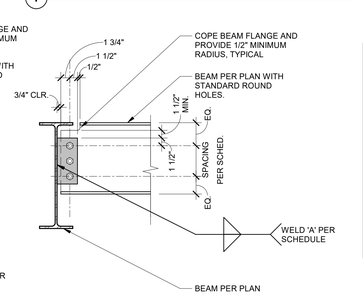

J WF BEAM AT WF BEAM, EQUAL OR SHALLOWER DEPTH

CONNECTION SCHEDULE						
BEAM SIZE	PLATE		WELD SIZE		BOLTS	
	DEPTH	THICKNESS	A	B	NO. & SIZE	SPACING
W8x, C8x	6"	3/8"	5/16	5/16	(2) 3/4"Ø	3"
W10x	8"	3/8"	5/16	5/16	(2) 3/4"Ø	3"
W12x	9"	3/8"	5/16	5/16	(3) 3/4"Ø	3"
W14x	9"	3/8"	5/16	5/16	(3) 3/4"Ø	3"
W16x	12"	3/8"	5/16	5/16	(4) 3/4"Ø	3"
W18x	15"	3/8"	5/16	5/16	(5) 3/4"Ø	3"
W21x	18"	3/8"	5/16	5/16	(6) 3/4"Ø	3"
W24x	20"	1/2"	3/8	3/8	(7) 7/8"Ø	2-5/8" MIN.
W27x	23"	1/2"	3/8	3/8	(8) 7/8"Ø	2-5/8" MIN.
W30x	26"	1/2"	3/8	3/8	(9) 7/8"Ø	2-5/8" MIN.
W33x	26"	1/2"	3/8	3/8	(9) 7/8"Ø	2-5/8" MIN.

NOTES:
* FOR SINGLE ROW (UNLESS NOTED OTHERWISE).
* ALL BOLTS SHALL BE A325N (U.N.O.)
* USE ASTM A572 (GR. 50) PLATES
* SEE DETAIL 20/S011.2 FOR DEMAND-CRITICAL CONNECTIONS PER PLAN.

* FOR CLOSURE PLATES WITHIN COLUMN WHER NO BEAM OCCURS, SEE 21/S008.2 & 22/S008.2 & 23/S008.2

IDENTIFICATION STAMP
DIV. OF THE STATE ARCHITECT
APP: 02-122821 INC: 2
REVIEWED FOR
SS ☑ FLS ☑ ACS ☑
DATE: 11/20/2025

Tetter, Inc. expressly reserves its common law copyright and other property rights in these plans. This document, the ideas and designs incorporated herein, as an instrument of professional service, is not to be used in whole or in part, for any other project without prior written authorization.

MARK	DATE	DESCRIPTION
A	11/13/2025	DSA BACKCHECK

REGISTERED PROFESSIONAL ENGINEER LUIS A. VALTIERRA No. 55608 STRUCTURAL STATE OF CALIFORNIA

TETER, INC.
FRESNO HEADQUARTERS
VISALIA | BAKERSFIELD | MODESTO | SAN LUIS OBISPO
ARCHITECTS ENGINEERS CONNECTED

VISALIA CAMPUS UNIVERSITY CENTER
COLLEGE OF THE SEQUOIAS
915 S. MOONEY BLVD
VISALIA, CALIFORNIA

DRAWING TITLE
TYPICAL DETAILS - STEEL

PROJECT NO.
22-12498

DRAWING
S011.2

PLOT DATE: 11/12/2025 7:24:04 PM

\\tetr-file1\Users\luis.valtierra\Documents\12498-S-UC_luis.valtierra.rvt

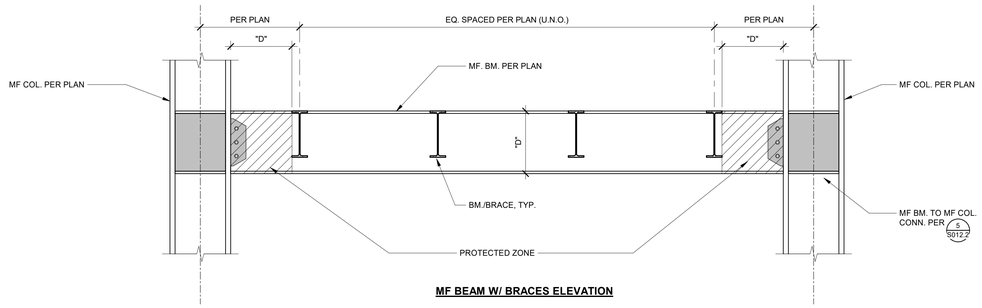

MF BEAM W/ BRACES ELEVATION

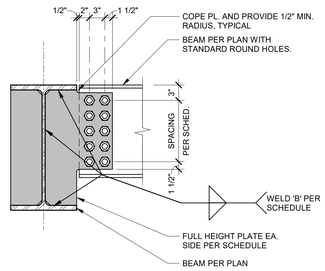

A **WF BEAM AT WF BEAM, EQUAL OR SHALLOWER DEPTH**

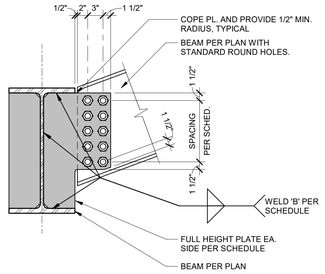

B **SKEW - WF BEAM AT WF BEAM**

SPECIAL MOMENT FRAME BRACE BEAM CONNECTION SCHEDULE

BRACE BEAM SIZE	PLATE*		WELD SIZE		BOLTS	
	DEPTH	THICKNESS	A	B	NO. & SIZE*	SPACING
W16x	FULL	5/8"	3/8	3/8	(8) 7/8"Ø	3"
W18x	FULL	1"	1/2	1/2	(10) 1 1/8"Ø	3"

NOTES:
* ALL BOLTS SHALL BE A325N
* USE ASTM A572 GR. 50 PLATES

SPECIAL MOMENT FRAME BRACE BEAM CONNECTION — N.T.S. — 18

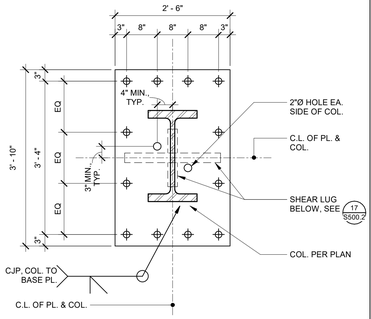

PLAN VIEW

MOMENT FRAME COLUMN BASE PLATE SCHEDULE				
PL. THICKNESS	PL. MATERIAL	# OF ANCHOR RODS	ANCHOR ROD Ø	EMBED.
3 3/8"	A572, Gr. 50	12	1 3/4"	1'-9"

1. FOR ANCHOR ROD DETAIL SEE 5 S010.2

2. FOR CJP BACKING BAR REQUIREMENTS, SEE 5A/S012.2 NOTE #2. COLUMN TERM USED THERE SHALL REFER TO BASE PLATE, BEAM TERM USED THERE SHALL REFER TO COLUMN

ALL CONNECTIONS SHOWN HERE ARE PART OF THE LATERAL FORCE RESISTING SYSTEM (LFRS) AND SHALL CONFORM TO DEMAND CRITICAL REQUIREMENTS - SEE GENERAL NOTES

WF COLUMN BASE PLATE — N.T.S. — 20

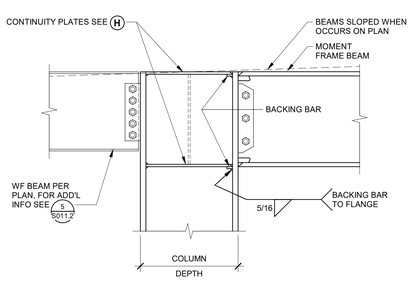

I **ELEVATION: MOMENT FRAME BEAM, ONE SIDE OF COLUMN**

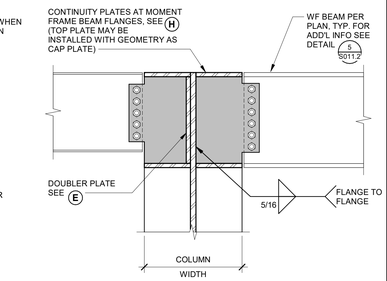

K **ELEVATION: MOMENT FRAME COLUMN, BEAM EACH SIDE**

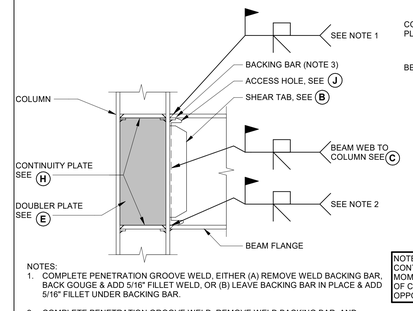

NOTES:
1. COMPLETE PENETRATION GROOVE WELD, EITHER (A) REMOVE WELD BACKING BAR, BACK GOUGE & ADD 5/16" FILLET WELD, OR (B) LEAVE BACKING BAR IN PLACE & ADD 5/16" FILLET UNDER BACKING BAR.
2. COMPLETE PENETRATION GROOVE WELD. REMOVE WELD BACKING BAR, AND PROVIDE REINFORCING FILLET.
   A. IF BACK GOUGED TO SOUND WELD METAL AFTER REMOVAL OF BACKING:
      - FOR FILLET LEG ADJACENT TO COLUMN PROVIDE 5/16" MINIMUM.
      - FOR FILLET LEG ADJACENT TO BEAM FLANGE, THE WIDTH SHALL BE SUCH THAT THE FILLET TOE IS LOCATED ON THE BEAM FLANGE BASE METAL (5/16" MINIMUM).
   B. IF THE BASE METAL AND WELD ROOT ARE GROUND SMOOTH AFTER REMOVAL OF BACKING: THE FILLET LEG ADJACENT TO THE BEAM FLANGE NEED NOT EXTEND TO THE BEAM FLANGE BASE METAL (5/16" MINIMUM).
3. DO NOT WELD (FILLET OR TACK) BACKING BARS TO UNDERSIDE OF BEAM FLANGE.

A **BEAM TO COLUMN FLANGE WELD**

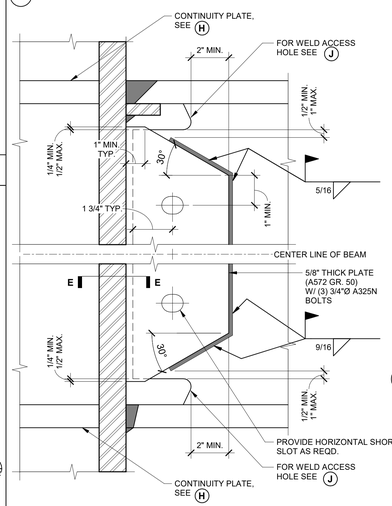

B **SHEAR TAB AT BEAM**

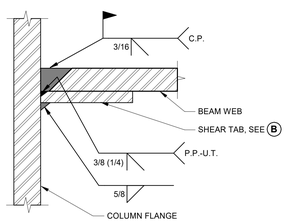

C **SHEAR TAB AT BEAM TO COLUMN FLANGE (PLAN)**

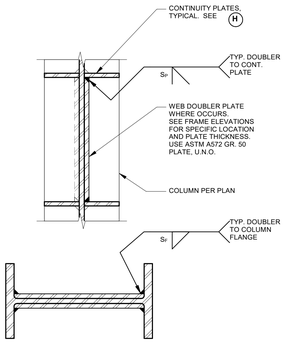

DOUBLER PLATE SCHEDULE - FULL DEPTH

COLUMN	DOUBLER PLATE	WELD SIZE		STEEL
		Sr	Sr	
W21x248	1 3/8"	C.J.P.	5/8"	A572 GR. 50

NOTES:
1. DOUBLER PLATES ARE ONLY REQUIRED AT SPECIFIC LOCATIONS, AND PLATE THICKNESS VARIES.
2. DOUBLER PLATES SHALL BE WELDED TO THE COLUMN FLANGES WITH PARTIAL JOINT PENETRATION GROOVE WELD PER AWS D1.8, CLAUSE 4.3. WELD TO COLUMN FLANGE MAY REQUIRE MULTIPLE WELD PASSES DUE TO LARGE k REGION.
3. DOUBLER PLATES SHALL BE WELDED TO THE CONTINUITY PLATES WITH PARTIAL JOINT PENETRATION GROOVE WELD.
4. FRAMING MEMBERS CONNECTING TO COLUMN WEB, MAY BE WELDED TO DOUBLER PLATE AS REQUIRED.

E **DOUBLER PLATE**

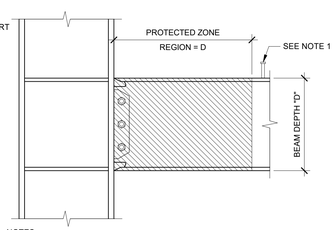

NOTES:
1. WELDED SHEAR STUDS SHALL NOT BE PLACED ON BEAM FLANGES WITHIN THE PROTECTED REGION.
2. CONTRACTOR SHALL VERIFY THAT NO WELDED, BOLTED, SCREWED OR SHOT-IN ATTACHMENTS FOR PERIMETER EDGE ANGLES, EXTERIOR FACADES, PARTITIONS, DUCT WORK, PIPING, OR OTHER CONSTRUCTION OCCUR WITHIN THE PROTECTED REGION.
3. CONTRACTOR SHALL VERIFY THAT THE PROTECTED REGION REMAINS CLEARLY MARKED THROUGHOUT THE ENTIRE CONSTRUCTION PROCESS.
4. ARC-SPOT WELDING OF METAL DECK WITHIN THE PROTECTED REGION IS PERMITTED.
5. CONTRACTOR SHALL NOTIFY THE ENGINEER OF FIELD CONDITIONS IN WHICH REGION IS NOT PROTECTED.

F **PROTECTED REGION**

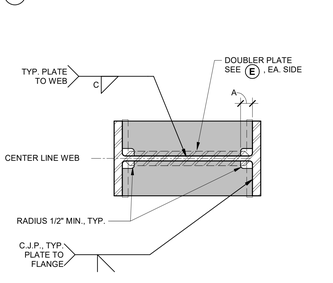

CONTINUITY PLATE SCHEDULE - FULL DEPTH

COLUMN	PLATE	DIM 'A'	DIM 'B'	WELD SZ. 'C'	STEEL
W21x248	1 1/2"	4 3/4"	2 1/4"	3/4"	A527 GR. 50
---	---	---	---	---	---

NOTES:
1. ALL CONTINUITY PLATES SHALL EXTEND FULL DEPTH OF COLUMN, MINUS THICKNESS OF COLUMN FLANGES.
2. CONTINUITY PLATES SHALL EXTEND FLUSH WITH COLUMN FLANGE ENDS.
3. REMOVE WELD TABS TO 1/4" MAXIMUM FROM EDGE OF CONTINUITY PLATE. GRIND END OF WELD SMOOTH (500 micro-in), NOT FLUSH. DO NOT GOUGE COLUMN FLANGE.
4. STOP PLATE WELD TO COLUMN WEB 1/4" FROM PLATE NOTCHES.
5. MINIMUM 1/2" RADIUS OF NOTCH TO CLEAR FILLET.
6. WELD TABS SHALL NOT BE USED AT PLATE TO WEB WELDING.
7. DIM 'A' = k + 1 1/2"
8. DIM 'B' = kt + 1/2"

H **CONTINUITY PLATES**

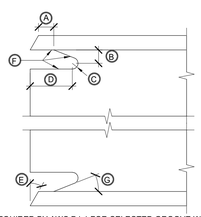

(E) BEVEL AS REQUIRED BY AWS D1.1 FOR SELECTED GROOVE WELD. (30° TYP.) IF LARGER IS USED, A & D SHOULD BE REVISED ACCORDINGLY.
(F) SMOOTHNESS REQUIREMENTS AND CUTTING METHODS PER FEMA-353.
(G) ANGLE SHALL NOT EXCEED 25 DEGREES.

WELD ACCESS HOLE SCHEDULE					
BEAM	(A)	(B)	(C)	(D)
W18x106	1"	1 1/4"	1/2"	3 1/2"
W24x131	1"	1 1/4"	1/2"	3 1/2"

J **WELD ACCESS HOLE**

NOTE: ALL WELDS ON MOMENT FRAMES ARE PART OF THE LATERAL FORCES RESISTING SYSTEM (LFRS) AND SHALL CONFORM TO DEMAND CRITICAL REQUIREMENTS - SEE GENERAL NOTES

SPECIAL MOMENT RESISTANT FRAME (WUF-W) — N.T.S. — 5

IDENTIFICATION STAMP
DIV. OF THE STATE ARCHITECT
APP: 02-122821 INC: 2
REVIEWED FOR
SS ☑ FLS ☑ ACS ☑
DATE: 11/20/2025

Teter, Inc. expressly reserves its common law copyright and other property rights in these plans. This document, the ideas and designs incorporated herein, as an instrument of professional service, is not to be used in whole or part, for any other project without prior written authorization.

MARK	DATE	DESCRIPTION
A	11/13/2025	DSA BACKCHECK

REGISTERED PROFESSIONAL ENGINEER LUIS A. VALTIERRA No. 55609 STRUCTURAL STATE OF CALIFORNIA 11/20/25

TETER, INC.
FRESNO HEADQUARTERS
VISALIA | BAKERSFIELD | MODESTO | SAN LUIS OBISPO
ARCHITECTS ENGINEERS CONSULTANTS

VISALIA CAMPUS UNIVERSITY CENTER
COLLEGE OF THE SEQUOIAS
915 S. MOONEY BLVD
VISALIA, CALIFORNIA

DRAWING TITLE
TYPICAL DETAILS - MOMENT FRAME

PROJECT NO.
22-12498

DRAWING
S012.2

PLOT DATE: 11/12/2025 7:24:08 PM

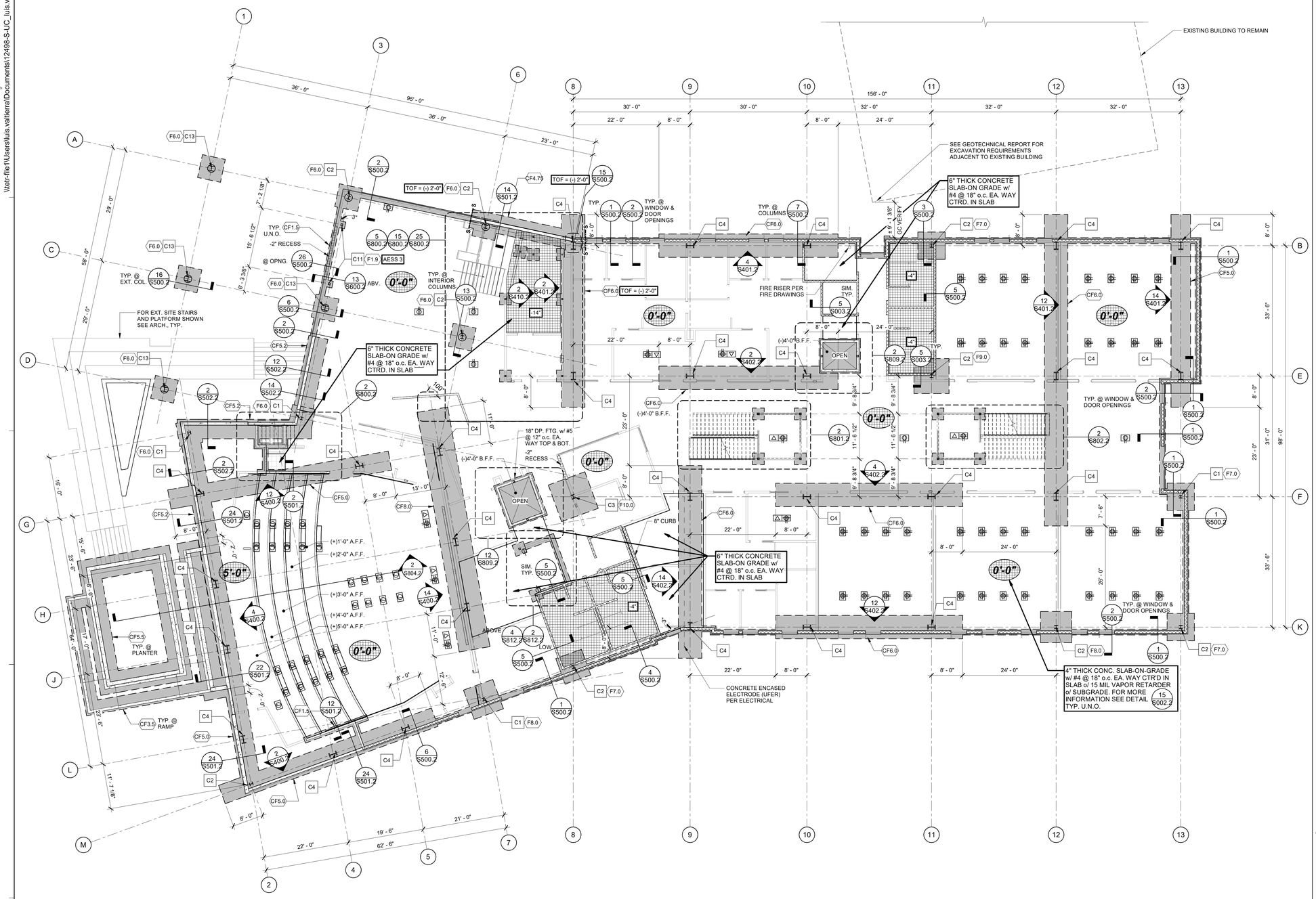

FOUNDATION NOTES

1. THE GENERAL NOTES AND TYPICAL DETAILS SHOWN ON THE S0XX SERIES SHEETS SHALL APPLY IN ALL CASES UNLESS SPECIFICALLY SHOWN OTHERWISE. WHERE NO DETAIL IS SHOWN, CONSTRUCTION SHALL BE AS SHOWN FOR SIMILAR WORK. SEE SHEET SPECIFICATIONS AND TYPICAL DETAILS FOR ADDITIONAL INFORMATION.
2. SCHEDULES AND NOTES APPLY TO THIS SHEET ONLY.
3. UNCLEAR, CONFLICTING, AND/OR MISSING INFORMATION SHALL BE BROUGHT TO THE ENGINEERS ATTENTION PRIOR TO CONSTRUCTION.
4. CONTRACTOR TO FIELD VERIFY ANY EXISTING INFORMATION.
5. ALL ITEMS ARE NEW UNLESS NOTED OTHERWISE.
6. ALL GRIDLINES ARE TO FACE OF STUD OR CENTERLINE OF COLUMN, U.N.O.
7. ALL DIMENSIONS ARE TAKEN TO GRIDLINES, FACE OF WALL, OR CENTER OF COLUMNS, U.N.O. COORDINATE ALL DIMENSIONS WITH ARCHITECTURAL DRAWINGS.
8. SEE ARCHITECTURAL DRAWINGS FOR WALL DIMENSIONS NOT SHOWN.
9. ALL COLUMNS ARE TO BE CENTERED ON PAD FOOTINGS AND IN WALLS, U.N.O.
10. ALL CONTINUOUS FOOTINGS TO BE TYPE CF1.5 U.N.O.
11. SEE CIVIL PLANS AND/OR SITE PLAN FOR LOCATION AND DIMENSIONS OF SIDEWALKS, RAMPS, EXTERIOR SLABS, MOW STRIPS, AND PLANTERS.
12. ALL EXTERIOR CONCRETE SLABS ARE TO BE POURED SEPARATELY.
13. SLAB THICKNESS TO BE CONSTANT WHERE SLABS SLOPE TO DRAIN.
14. FOR BUILDING PAD SOIL PREPARATION AND VAPOR BARRIERS, SEE DETAIL 15 S002.2
15. SEE ARCHITECTURAL FOR SLAB DEPRESSION EXTENTS & LOCATIONS, SLAB SLOPES.
16. CONCRETE SLABS ARE FINISH SURFACES AS INDICATED ON ARCHITECTURAL FINISH FLOOR PLANS. NO TEMPORARY FASTENING, HOLES OR DEFORMATIONS ARE ALLOWED.
17. FOR SLAB ON GRADE JOINT DETAILING, SEE 10 S101.2 & 1 S003.2 & 2 S003.2
18. ALL EMBEDDED ITEMS SHALL BE IN PLACE AND SECURE PRIOR TO POURING OF CONCRETE.
19. TOP OF FOOTING (T.O.F.) SHALL BE **(-) 1'-6"**, U.N.O.
20. ALL ELEVATIONS ARE ESTABLISHED FROM AND RELATIVE TO FIRST FLOOR FINISHED SLAB (0'-0" DATUM), U.N.O. FOR ACTUAL ELEVATIONS, SEE CIVIL DRAWINGS.
21. FOR PIPES/CONDUITS NEAR TO OR INTERSECTING FOUNDATIONS, SEE DETAIL 20 S002.2
22. SEE ARCHITECTURAL DRAWINGS FOR WALL STUD SIZES AND SPACING, U.N.O.
23. FOR TYPICAL WALL FRAMING SEE DETAIL 4 S004.2
24. FOR INTERIOR NON-BEARING WALL LOCATIONS SEE ARCHITECTUAL DRAWINGS. FOR WALL FRAMING SEE DETAIL 5 S005.2
25. FOR TYPICAL INTERIOR COLUMN FOOTING DETAIL, SEE 13 S500.2
26. FOR TYPICAL EXTERIOR COLUMN FOOTING DETAILS, SEE 7 S500.2
27. FOR MOMENT FRAME COLUMN FOOTING DETAILS, SEE ELEVATIONS.
28. PROVIDE AESS AT ALL EXPOSED STEEL FRAMING PER NOTE #18 OF THE STRUCTURAL STEEL NOTES ON SHEET S001.2.

FOUNDATION SCHEDULE

MARK	SIZE	REINFORCEMENT
CONTINUOUS FOOTING		
CF1.5	1'-6" WIDE x 1'-6" THICK CONT.	(3) #5 LONG T&B w/ #3 TIES @ 12" o.c.
CF3.5	3'-6" WIDE x 1'-6" THICK CONT.	(4) #5 LONG. T&B AND #5 TRANS. T&B @ 18"o.c.
CF4.75	4'-9" WIDE x 1'-6" THICK CONT.	(5) #6 CONT. T&B LONG. w/ #5@9"o.c. T&B TRANS.
CF5.0	5'-0" WIDE x 3'-0" THICK CONT.	(9) #6 CONT. TOP & (11) #7 CONT. BOT. w/ #4 TIES @ 12"o.c.
CF5.2	5'-0" WIDE x 1'-6" THICK CONT.	(7) #6 CONT. TOP & (11) #7 CONT. BOT. w/ #4 TIES @ 12"o.c.
CF5.5	5'-6" WIDE x 1'-6" THICK CONT.	(6) #5 LONG. T&B AND #5 TRANS. T&B @ 12"o.c.
CF6.0	6'-0" WIDE x 3'-0" THICK CONT.	(9) #6 CONT. TOP & (13) #7 CONT. BOT. w/ #4 TIES @ 12"o.c.
CF8.0	8'-0" WIDE x 3'-0" THICK CONT.	(12) #6 CONT. TOP & (18) #7 CONT. BOT. w/ #4 TIES @ 12"o.c.
PAD FOOTING		
F1.9	1'-9" SQ. x 1'-6" DP.	(2) #5 EA. WAY TOP & BOT.
F3	3'-0" SQ. x 1'-6" DP.	(4) #5 EA. WAY TOP & BOT.
F6.0	6'-0" SQ. x 1'-6" DP.	(4) #6 AT TOP EA. WAY & (6) #6 AT BOT. EA. WAY
F7.0	7'-0" SQ. x 2'-0" DP.	(7) #6 AT TOP EA. WAY & (10) #6 AT BOT. EA. WAY
F8.0	8'-0" SQ. x 2'-0" DP.	(11) #6 EA. WAY AT TOP & BOT.
F9.0	9'-0" SQ. x 2'-0" DP.	(12) #6 EA. WAY AT TOP & BOT.
F10.0	10'-0" SQ. x 2'-0" DP.	

COLUMN SCHEDULE

MARK	DESCRIPTION	COMMENTS
C1	W8X48	FOR BASE PLATE, SEE DETAIL **4 / S010.2**
C2	W10X60	FOR BASE PLATE, SEE DETAIL **4 / S010.2**
C3	W12X58	FOR BASE PLATE, SEE DETAIL **4 / S010.2**
C4	W21X248	FOR BASE PLATE, SEE DETAIL **20 / S012.2**
C6	HSS4X4X1/4	
C7	HSS5X5X3/16	
C9	HSS5X5X3/8	
C10	HSS5X5X1/2	
C11	HSS6X6X1/2	
C12	HSS6X6X3/8	
C13	W14X90	

LEGEND

- GRID BUBBLE AND NUMBER. SEE ARCHITECTURAL DRAWING PACKAGE FOR DETAILED DIMENSIONS OF ALL GRIDS SHOWN.
- 1 / S400 — SECTION/ ELEVATION MARK. SEE REFERENCING DETAIL NUMBER AND SHEET NUMBER FOR ADDITIONAL INFORMATION.
- 1 / S700 — DETAIL MARK. SEE REFERENCING DETAIL NUMBER AND SHEET NUMBER FOR ADDITIONAL INFORMATION.
- ELEVATION MARK (T.O.W. / (+) 0'-0"): T.O.W. = TOP OF WALL; T.O.F. = TOP OF FOOTING; T.O.S. = TOP OF STEEL
- FX — FOOTING TAG. SEE FOUNDATION SCHEDULE FOR ADDITIONAL INFORMATION.
- CFX — CONTINUOUS FOOTING TAG. SEE FOUNDATION SCHEDULE FOR ADDITIONAL INFORMATION.
- CX — COLUMN TAG. SEE COLUMN SCHEDULE FOR ADDITIONAL INFORMATION.
- CONCRETE FOOTING.
- -2" — INDICATES AREA AND DEPTH OF SLAB DEPRESSION. SEE ARCHITECTURAL DRAWINGS AND DETAIL 5 S003.2
- INDICATES METAL STUD WALLS. FOR STUD SIZES, SPACING AND ARCHITECTURAL WALL TYPES, SEE ARCHITECTURAL DRAWINGS. FOR TYPICAL WALL FRAMING SEE DETAIL 4 S004.2
- INDICATES 6" HIGH CONCRETE CURB. SEE ARCH. FOR CURB WIDTH
- INDICATES FLOOR BOX. SEE ELECTRICAL DRAWINGS & 12 S003.2
- INDICATES STEPPED FOOTING PER DETAIL 12 S002.2
- INDICATES FLOOR DRAIN. SEE PLUMBING FOR ADDITIONAL INFORMATION.

NORTH

IDENTIFICATION STAMP
DIV. OF THE STATE ARCHITECT
APP: 02-122821 INC: 2
REVIEWED FOR
SS ☑ FLS ☑ ACS ☑
DATE: 11/20/2025

Teter, Inc. expressly reserves its common law copyright and other property rights in these plans. This document, the ideas and designs incorporated herein, as an instrument of professional service, is not to be used in whole or in part, for any other project without prior written authorization.

MARK	DATE	DESCRIPTION
A	11/13/2025	DSA BACKCHECK

TETER, INC.
ARCHITECTS ENGINEERS CONNECTED
FRESNO HEADQUARTERS
VISALIA | BAKERSFIELD | MODESTO | SAN LUIS OBISPO

VISALIA CAMPUS UNIVERSITY CENTER
COLLEGE OF THE SEQUOIAS
915 S. MOONEY BLVD
VISALIA, CALIFORNIA

DRAWING TITLE: FOUNDATION PLAN

PROJECT NO. 22-12498

DRAWING S100.2

\\tetr-file1\Users\luis.valtierra\Documents\12498-S-UC_luis.valtierra.rvt

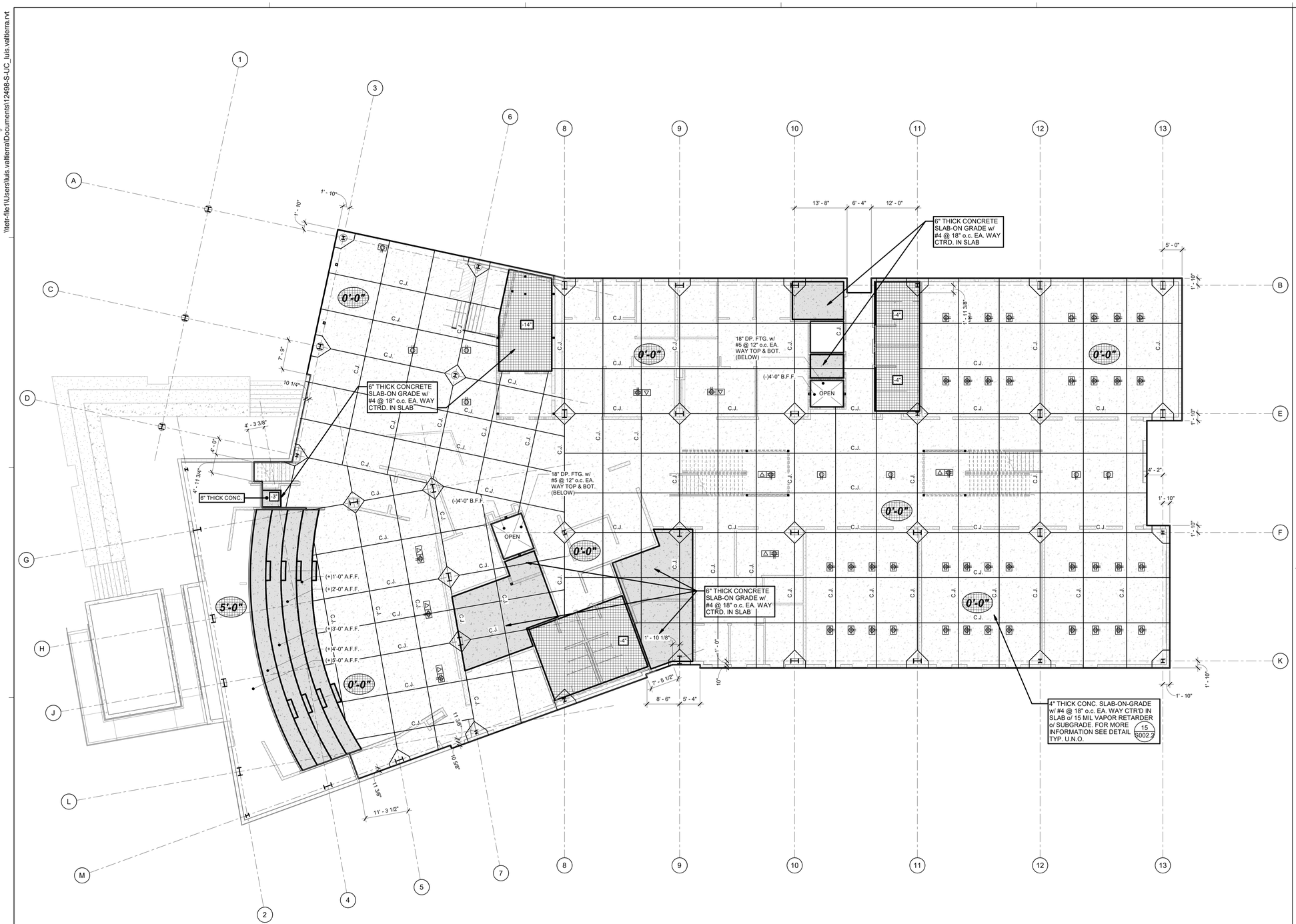

SLAB EDGE PLAN NOTES

1. THE GENERAL NOTES AND TYPICAL DETAILS SHOWN ON THE S0XX SERIES SHEETS SHALL APPLY IN ALL CASES UNLESS SPECIFICALLY SHOWN OTHERWISE. WHERE NO DETAIL IS SHOWN, CONSTRUCTION SHALL BE AS SHOWN FOR SIMILAR WORK. SEE SHEET SPECIFICATIONS AND TYPICAL DETAILS FOR ADDITIONAL INFORMATION.
2. UNCLEAR, CONFLICTING, AND/OR MISSING INFORMATION SHALL BE BROUGHT TO THE ENGINEERS ATTENTION PRIOR TO CONSTRUCTION.
3. ALL GRIDLINES ARE TO FACE OF STUD OR CENTERLINE OF COLUMN, U.N.O.
4. ALL DIMENSIONS ARE TAKEN TO GRIDLINES, FACE OF WALL, OR CENTER OF COLUMNS, U.N.O. COORDINATE ALL DIMENSIONS WITH ARCHITECTURAL DRAWINGS.
5. ALL COLUMNS ARE TO BE CENTERED ON PAD FOOTINGS AND IN WALLS, U.N.O.
6. SEE CIVIL PLANS AND/OR SITE PLAN FOR LOCATION AND DIMENSIONS OF SIDEWALKS, RAMPS, EXTERIOR SLABS, MOW STRIPS, AND PLANTERS.
7. FOR FLOOR DRAIN, DATA, AND FLOOR BOX LOCATIONS REFER TO ARCHITECTURAL, MECHANICAL, PLUMBING, ELECTRICAL AND TECHNOLOGY PLANS.
8. ALL EXTERIOR CONCRETE SLABS ARE TO BE POURED SEPARATELY.
9. SLAB THICKNESS TO BE CONSTANT WHERE SLABS SLOPE TO DRAIN.
10. SEE ARCHITECTURAL FOR SLAB DEPRESSION EXTENTS & LOCATIONS, SLAB SLOPES.
11. CONCRETE SLABS ARE FINISH SURFACES AS INDICATED ON ARCHITECTURAL FINISH FLOOR PLANS. NO TEMPORARY FASTENING, HOLES OR DEFORMATIONS ARE ALLOWED.
12. FOR SLAB ON GRADE JOINT DETAILING, SEE 1/S003.2 & 2/S003.2
13. PROVIDE REENTRANT CORNER REINFORCING AT ALL PITS AND TRENCHES PER DETAIL 15/S003.2
14. ALL EMBEDDED ITEMS SHALL BE IN PLACE AND SECURE PRIOR TO POURING OF CONCRETE.
15. ALL ELEVATIONS ARE ESTABLISHED FROM AND RELATIVE TO FIRST FLOOR FINISHED SLAB (0'-0" DATUM), U.N.O. FOR ACTUAL ELEVATIONS, SEE CIVIL DRAWINGS.

LEGEND

- (#) GRID BUBBLE AND NUMBER. SEE ARCHITECTURAL DRAWING PACKAGE FOR DETAILED DIMENSIONS OF ALL GRIDS SHOWN.
- 1/S400 SECTION/ ELEVATION MARK. SEE REFERENCING DETAIL NUMBER AND SHEET NUMBER FOR ADDITIONAL INFORMATION.
- 1/S700 DETAIL MARK. SEE REFERENCING DETAIL NUMBER AND SHEET NUMBER FOR ADDITIONAL INFORMATION.
- T.O.W. (+) 0'-0" ELEVATION MARK
  T.O.W. = TOP OF WALL
  T.O.F. = TOP OF FOOTING
  T.O.S. = TOP OF STEEL
- -2" INDICATES AREA AND DEPTH OF SLAB DEPRESSION. SEE ARCHITECTURAL DRAWINGS AND DETAIL 5/S003.2
- INDICATES 6" HIGH CONCRETE CURB. SEE ARCHITECTURAL FOR CURB WIDTH
- INDICATES FLOOR BOX. SEE ELECTRICAL DRAWINGS & 12/S003.2
- C.J. INDICATES CONTROL JOINTS. LAYOUT SHOWN IS PRELIMINARY. FINAL LAYOUT TO BE DETERMINED BY G.C. VERIFY SPACING PER CONCRETE MIX, PLACEMENT, AND FINSIH SHEET SPECIFICATION. SEE DETAIL 1/S003.2 & 2/S003.2
- INDICATES A COLUMN BLOCKOUT, SEE DETAIL 9/S003.2

NORTH

IDENTIFICATION STAMP
DIV. OF THE STATE ARCHITECT
APP: 02-122821 INC: 2
REVIEWED FOR
SS ☑ FLS ☑ ACS ☑
DATE: 11/20/2025

Teter, Inc. expressly reserves its common law copyright and other property rights in these plans. This document, the ideas and designs incorporated herein, as an instrument of professional service, is not to be used in whole or part, for any other project without prior written authorization.

MARK	DATE	DESCRIPTION
A	11/13/2025	DSA BACKCHECK

REGISTERED PROFESSIONAL ENGINEER ERIC S. BALTZ No. 55609 STRUCTURAL STATE OF CALIFORNIA

TETER, INC.
FRESNO HEADQUARTERS
VISALIA | BAKERSFIELD | MODESTO | SAN LUIS OBISPO
ARCHITECTS ENGINEERS CONNECTED

VISALIA CAMPUS UNIVERSITY CENTER
COLLEGE OF THE SEQUOIAS
915 S. MOONEY BLVD
VISALIA, CALIFORNIA

DRAWING TITLE
SLAB EDGE PLAN

PROJECT NO.
22-12498

DRAWING
S101.2

PLOT DATE: 11/12/2025 7:24:24 PM

\\tet-file1\Users\luis.valtierra\Documents\12498-S-UC_luis.valtierra.rvt

NOTE:
FLR. ELEV. = (+)17'-6" A.F.F., U.N.O.
T.O.S. = (+)16'-11 1/2" A.F.F., U.N.O.

FLOOR FRAMING NOTES

1. THE TYPICAL DETAILS SHOWN ON THE S0XX SERIES SHEETS SHALL APPLY IN ALL CASES, UNLESS SPECIFICALLY SHOWN OTHERWISE. WHERE NO DETAIL IS SHOWN, CONSTRUCTION SHALL BE AS SHOWN FOR SIMILAR WORK. SEE SHEET SPECIFICATIONS AND TYPICAL DETAILS FOR ADDITIONAL INFORMATION.
2. UNCLEAR, CONFLICTING AND/OR MISSING INFORMATION SHALL BE BROUGHT TO THE ENGINEER'S ATTENTION PRIOR TO CONSTRUCTION.
3. ALL DIMENSIONS ARE TO FACE OF WALL STUD OR CENTER OF COLUMN, U.N.O. COORDINATE ALL DIMENSIONS WITH ARCHITECTURAL DRAWINGS.
4. SEE FOUNDATION PLAN FOR COLUMNS SHOWN BUT NOT NOTED.
5. ALL ELEVATIONS ARE ESTABLISHED FROM AND RELATIVE TO FIRST FLOOR FINISHED SLAB (0'-0" DATUM), U.N.O. FOR ACTUAL ELEVATIONS, SEE CIVIL DRAWINGS.
6. STEEL MEMBERS ARE EQUALLY SPACED BETWEEN DIMENSION POINTS, U.N.O., AND SHALL FRAME TO CENTERLINE OF COLUMNS OR WORK POINT.
7. SEE ARCHITECTURAL DRAWINGS FOR WALL STUD SIZES AND SPACING, U.N.O.
8. SEE DETAILS FOR TYPICAL DECK TO BEAM CONNECTION CONDITIONS AT ALL STRUCTURAL MEMBERS. ENSURE FLUTE OF METAL DECK LANDS ON BEAM/JOIST. IF DECK FLUTE DOES NOT FULLY LAND ON MEMBERS, SEE DETAIL 14/S007.2
9. DO NOT SUSPEND PIPING, LIGHT FIXTURES, MAIN LINE CONDUITS OR OTHER UTILITIES FROM METAL DECK ALONE. SUSPENDED T-BAR CEILING WITH LIGHT FIXTURES AND SOFFIT FRAMING ARE ACCEPTABLE. HANGING LOADS SHALL BE SUPPORTED PER DETAIL 2/S006.2
10. DO NOT PLACE PIPES IN CONCRETE FILL OVER METAL DECK. WHERE NECESSARY, CONDUITS SHALL BE PLACED PER DETAIL 24/S007.2
11. ALL MECHANICAL UNITS SHALL BE VERIFIED WITH MECHANICAL CONTRACTOR PRIOR TO CONSTRUCTION. SEE MECHANICAL DRAWINGS.
12. SEE ARCHITECTURAL PLANS FOR PLUMBING PENETRATIONS.
13. FOR TYPICAL FRAMING AT MECHANICAL OPENINGS, SEE DETAIL 5/S007.2.
14. HEADERS: FOR HEADERS SHOWN BUT NOT NOTED AND FOR TYPICAL WALL OPENING SEE DETAIL 4/S004.2
15. NON-STRUCTURAL STUD WALLS ARE NOT SHOWN. FOR LOCATIONS SEE ARCHITECTURAL DRAWINGS.
16. FOR TYPICAL TOP NON-BEARING WALL CONNECTION, SEE DETAIL 5/S005.2
17. FOR STEEL BEAM-TO-BEAM AND BEAM-TO-COLUMN CONNECTIONS, SEE DETAIL 5/S011.2
18. BEAMS AT FLOOR OPENINGS SHALL BE PLACED 6" FROM EDGE OF OPENING, TYPICAL U.N.O. FOR THE 6" TYPICAL CONDITION, CLOSURE PLATES SHALL BE AS NOTED PER DECK SCHEDULE ON DETAIL 5/S007.2, EXCLUDES BEAM AT ELEVATOR.
19. SEE ARCHITECTURAL FOR DETAILS AT ELEVATOR DOOR SILL AND SHAFT WALL CONSTRUCTION.
20. PROVIDE AESS AT ALL EXPOSED STEEL FRAMING PER NOTE #18 OF THE STRUCTURAL STEEL NOTES ON SHEET S001.2.

SECOND FLOOR DESIGN LOADS

FLOOR DEAD LOAD	
CONCRETE OVER STEEL DECK (6 1/2" TOTAL)	64.8 PSF
CONCRETE OVERPOUR (3/8" FOR 3/4" TYP. CAMBER)	4.7 PSF
SUSPENDED CEILING W/ ELECTRICAL	2.5 PSF
MECHANICAL	1.0 PSF
SPRINKLERS	2.0 PSF
INTERIOR WALLS	5.0 PSF
MISCELLANEOUS	2.0 PSF
TOTAL	**82.0 PSF**
(SEISMIC MASS	87.0 PSF = SELF WT)
FLOOR LIVE LOAD	
LIVE LOAD - TYPICAL	80.0 PSF
LIVE LOAD - CORRIDOR	100.0 PSF
LIVE LOAD - BALCONY	100.0 PSF

LEGEND

- GRID BUBBLE AND NUMBER. SEE ARCHITECTURAL DRAWING PACKAGE FOR DETAILED DIMENSIONS OF ALL GRIDS SHOWN.
- SECTION/ ELEVATION MARK. SEE REFERENCING DETAIL NUMBER AND SHEET NUMBER FOR ADDITIONAL INFORMATION.
- DETAIL MARK. SEE REFERENCING DETAIL NUMBER AND SHEET NUMBER FOR ADDITIONAL INFORMATION.
- ELEVATION MARK
  T.O.W. = TOP OF WALL
  T.O.F. = TOP OF FOOTING
  T.O.S. = TOP OF STEEL
- CX — COLUMN TAG. SEE COLUMN SCHEDULE ON FOUNDATION PLAN FOR ADDITIONAL INFORMATION.
- INDICATES STUD WALLS ABOVE ROOF FRAMING LEVEL. FOR STUD SIZES, SPACING AND ARCHITECTURAL WALL TYPES, SEE ARCHITECTURAL DRAWINGS. FOR WALL FRAMING SEE DETAIL 4/S004.2
- INDICATES STUD WALL BELOW FRAMING LEVEL.
- W16x26* (n=12) (c=1") — FRAME BEAM ID
  n = NUMBER OF STUDS
  c = CAMBER
  * = SPECIAL CONNECTION AT MOMENT FRAME PER 18/S012.2
- W3 — STEEL DECK W/ CONCRETE TOPPING. FOR ADDITIONAL INFORMATION SEE 2/S007.2
- INDICATES 6" HIGH CONCRETE CURB. SEE ARCH. FOR CURB WIDTH
- INDICATES FLOOR DECK OPENING, SEE DETAIL 5/S007.2
- INDICATES BEAM AS PART OF LFRS AND MOMENT CONNECTION. SEE DETAIL 5/S012.2 FOR ADDITIONAL INFORMATION
- INDICATES BEAM AS PART OF LFRS AND CONNECTION TO BE MADE WITH ASTM A490 BOLTS w/ CLASS B FAYING SURFACE (SLIP-CRITICAL). FOR SIZE AND QUANTITY OF BOLTS SEE DETAIL 20/S011.2
- INDICATES CANTILEVERED MOMENT CONNECTION. SEE DETAIL 15/S010.2 FOR ADDITIONAL INFORMATION, U.N.O.
- INDICATES FLOOR BOX. SEE ELECTRICAL DRAWINGS AND DETAIL 19/S007.2

NORTH

SECOND FLOOR (LOWER) FRAMING PLAN — 3/32" = 1'-0" — 10

NOTES, SCHEDULES, AND LEGEND — 5

PLOT DATE: 11/12/2025 7:24:35 PM

IDENTIFICATION STAMP
DIV. OF THE STATE ARCHITECT
APP: 02-122821 INC: 2
REVIEWED FOR
SS ☑ FLS ☑ ACS ☑
DATE: 11/20/2025

Teter, Inc. expressly reserves its common law copyright and other property rights in these plans. This document, the ideas and designs incorporated herein, as an instrument of professional service, is not to be used in whole or part, for any other project without prior written authorization.

MARK	DATE	DESCRIPTION
A.	11/13/2025	DSA BACKCHECK

REGISTERED PROFESSIONAL ENGINEER — STEVEN S. BAILEY — No. 55659 — STRUCTURAL — STATE OF CALIFORNIA

TETER, INC.
ARCHITECTS ENGINEERS CONNECTED
FRESNO HEADQUARTERS
VISALIA | BAKERSFIELD | MODESTO | SAN LUIS OBISPO

VISALIA CAMPUS UNIVERSITY CENTER
COLLEGE OF THE SEQUOIAS
915 S. MOONEY BLVD
VISALIA, CALIFORNIA

DRAWING TITLE
2ND FLOOR (LOWER) FRAMING PLAN

PROJECT NO.
22-12498

DRAWING
S200.2

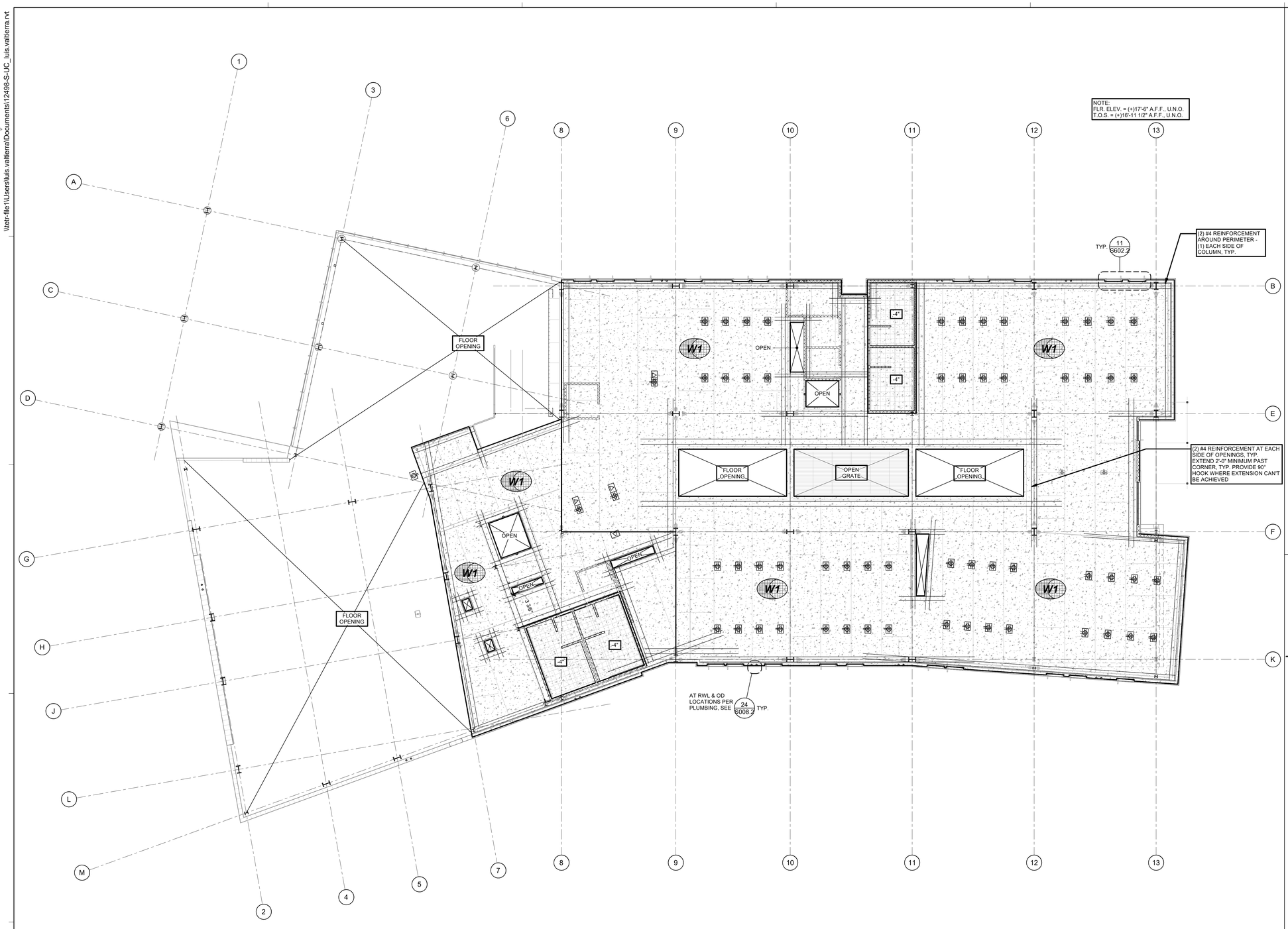

FLOOR DIAPHRAGM NOTES

1. DOWELS ATTACHED TO PLATES MAY BE PLACED ABOVE W.W.M.
2. LAP BARS PER DETAIL 1 S002.2.
3. FOR OPENINGS LARGER THAN 24" SQ. NOT SHOWN PROVIDE (1) #4 TRIM BAR EACH SIDE. EXTEND 4'-0" PAST EDGE OF OPENING.
4. AT RE-ENTRANT CORNERS, PROVIDE (2) #4 TRIM BARS EACH SIDE. EXTEND TRIM BARS AND PERIMETER BARS 4'-0" PAST EDGE OF CORNERS.
5. PROVIDE TYP. REINF. PER DETAILS ON SHEET S007.2.

LEGEND

#	GRID BUBBLE AND NUMBER. SEE ARCHITECTURAL DRAWING PACKAGE FOR DETAILED DIMENSIONS OF ALL GRIDS SHOWN.
1 S400	SECTION/ ELEVATION MARK. SEE REFERENCING DETAIL NUMBER AND SHEET NUMBER FOR ADDITIONAL INFORMATION.
1 S700	DETAIL MARK. SEE REFERENCING DETAIL NUMBER AND SHEET NUMBER FOR ADDITIONAL INFORMATION.
T.O.S. (+) 0'-0"	ELEVATION MARK T.O.W. = TOP OF WALL T.O.F. = TOP OF FOOTING T.O.S. = TOP OF STEEL
CX	COLUMN TAG. SEE COLUMN SCHEDULE ON FOUNDATION PLAN FOR ADDITIONAL INFORMATION.
	INDICATES STUD WALLS ABOVE FRAMING LEVEL. FOR STUD SIZES, SPACING AND ARCHITECTURAL WALL TYPES, SEE ARCHITECTURAL DRAWINGS. FOR WALL FRAMING SEE DETAIL 4 S004.2
	INDICATES STUD WALL BELOW FLOOR LEVEL.
W16x26 (c=1")	FRAME BEAM ID c = CAMBER
W3	STEEL DECK W/ CONCRETE TOPPING. FOR ADDITIONAL INFORMATION SEE 2 S007.2
	INDICATES 6" HIGH CONCRETE CURB. SEE ARCH. FOR CURB WIDTH
	INDICATES FLOOR DECK OPENING, SEE DETAIL 5 S007.2
	INDICATES BEAM AS PART OF LFRS AND MOMENT CONNECTION. SEE DETAIL 5 S012.2 FOR ADDITIONAL INFORMATION
	INDICATES BEAM AS PART OF LFRS AND CONNECTION TO BE MADE WITH ASTM A490 BOLTS w/ CLASS B FAYING SURFACE (SLIP-CRITICAL). FOR SIZE AND QUANTITY OF BOLTS SEE DETAIL 20 S011.2
	INDICATES CANTILEVERED MOMENT CONNECTION. SEE DETAIL 15 S010.2 FOR ADDITIONAL INFORMATION
	INDICATES FLOOR BOX. SEE ELECTRICAL DRAWINGS AND DETAIL 19 S007.2

IDENTIFICATION STAMP
DIV. OF THE STATE ARCHITECT
APP: 02-122821 INC: 2
REVIEWED FOR
SS ☑ FLS ☑ ACS ☑
DATE: 11/20/2025

Teter, Inc. expressly reserves its common law copyright and other property rights in these plans. This document, the ideas and designs incorporated herein, as an instrument of professional service, is not to be used in whole or in part, for any other project without prior written authorization.

MARK	DATE	DESCRIPTION
A	11/13/2025	DSA BACKCHECK

REGISTERED PROFESSIONAL ENGINEER
ERIC S. BAILEY
No. 55569
STRUCTURAL
STATE OF CALIFORNIA

TETER, INC.
FRESNO HEADQUARTERS
VISALIA | BAKERSFIELD | MODESTO | SAN LUIS OBISPO
ARCHITECTS ENGINEERS CONNECTED

VISALIA CAMPUS UNIVERSITY CENTER
COLLEGE OF THE SEQUOIAS
915 S. MOONEY BLVD
VISALIA, CALIFORNIA

DRAWING TITLE
2ND FLOOR (LOWER) DIAPHRAGM PLAN

PROJECT NO.
22-12498

DRAWING
S201.2

SECOND FLOOR (LOWER) DIAPHRAGM PLAN 3/32" = 1'-0" 10

NOTES, SCHEDULES, AND LEGEND 5

PLOT DATE: 11/12/2025 7:24:46 PM

\\tetr-file1\Users\luis.valtierra\Documents\12498-S-UC_luis.valtierra.rvt

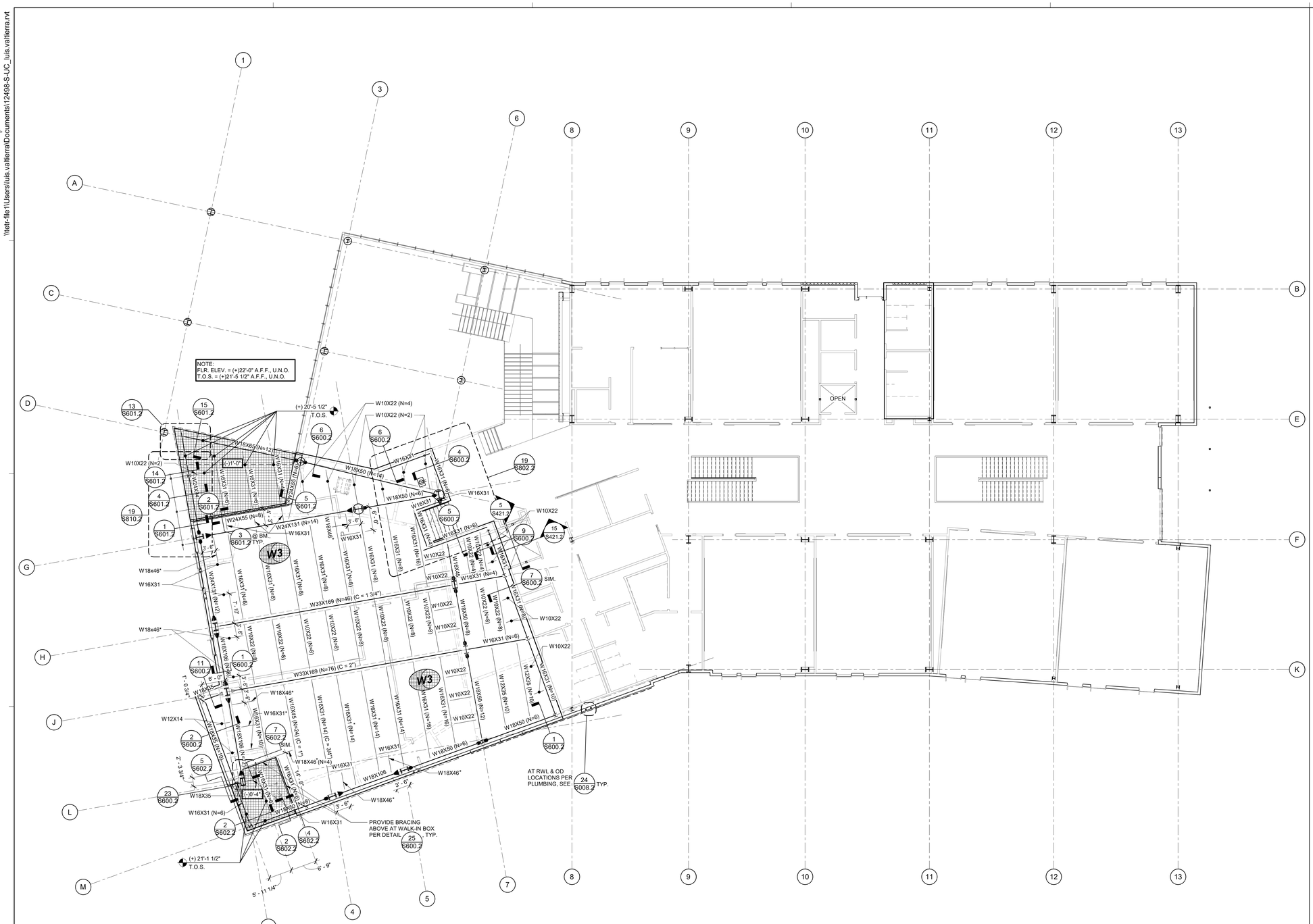

FLOOR FRAMING NOTES

1. THE TYPICAL DETAILS SHOWN ON THE S0XX SERIES SHEETS SHALL APPLY IN ALL CASES, UNLESS SPECIFICALLY SHOWN OTHERWISE. WHERE NO DETAIL IS SHOWN, CONSTRUCTION SHALL BE AS SHOWN FOR SIMILAR WORK. SEE SHEET SPECIFICATIONS AND TYPICAL DETAILS FOR ADDITIONAL INFORMATION.
2. UNCLEAR, CONFLICTING AND/OR MISSING INFORMATION SHALL BE BROUGHT TO THE ENGINEER'S ATTENTION PRIOR TO CONSTRUCTION.
3. ALL DIMENSIONS ARE TO FACE OF WALL STUD OR CENTER OF COLUMN, U.N.O. COORDINATE ALL DIMENSIONS WITH ARCHITECTURAL DRAWINGS.
4. SEE FOUNDATION PLAN FOR COLUMNS SHOWN BUT NOT NOTED.
5. ALL ELEVATIONS ARE ESTABLISHED FROM AND RELATIVE TO FIRST FLOOR FINISHED SLAB (0'-0" DATUM), U.N.O. FOR ACTUAL ELEVATIONS, SEE CIVIL DRAWINGS.
6. STEEL MEMBERS ARE EQUALLY SPACED BETWEEN DIMENSION POINTS, U.N.O., AND SHALL FRAME TO CENTERLINE OF COLUMNS OR WORK POINT.
7. SEE ARCHITECTURAL DRAWINGS FOR WALL STUD SIZES AND SPACING, U.N.O.
8. SEE DETAILS FOR TYPICAL DECK TO BEAM CONNECTION CONDITIONS AT ALL STRUCTURAL MEMBERS. ENSURE FLUTE OF METAL DECK LANDS ON BEAM/JOIST. IF DECK FLUTE DOES NOT FULLY LAND ON MEMBERS, SEE DETAIL 14/S007.2
9. DO NOT SUSPEND PIPING, LIGHT FIXTURES, MAIN LINE CONDUITS OR OTHER UTILITIES FROM METAL DECK ALONE. SUSPENDED T-BAR CEILING WITH LIGHT FIXTURES AND SOFFIT FRAMING ARE ACCEPTABLE. HANGING LOADS SHALL BE SUPPORTED PER DETAIL 2/S006.2
10. DO NOT PLACE PIPES IN CONCRETE FILL OVER METAL DECK. WHERE NECESSARY, CONDUITS SHALL BE PLACED PER DETAIL 20/S007.2
11. ALL MECHANICAL UNITS SHALL BE VERIFIED WITH MECHANICAL CONTRACTOR PRIOR TO CONSTRUCTION. SEE MECHANICAL DRAWINGS.
12. SEE ARCHITECTURAL PLANS FOR PLUMBING PENETRATIONS.
13. FOR TYPICAL FRAMING AT MECHANICAL OPENINGS, SEE DETAIL 5/S007.2.
14. HEADERS: FOR HEADERS SHOWN BUT NOT NOTED AND FOR TYPICAL WALL OPENING SEE DETAIL 4/S004.2
15. NON-STRUCTURAL STUD WALLS ARE NOT SHOWN. FOR LOCATIONS SEE ARCHITECTURAL DRAWINGS.
16. FOR TYPICAL TOP NON-BEARING WALL CONNECTION, SEE DETAIL 5/S005.2
17. FOR STEEL BEAM-TO-BEAM AND BEAM-TO-COLUMN CONNECTIONS, SEE DETAIL 5/S011.2
18. BEAMS AT FLOOR OPENINGS SHALL BE PLACED 6" FROM EDGE OF OPENING, TYPICAL U.N.O. FOR THE 6" TYPICAL CONDITION, CLOSURE PLATES SHALL BE AS NOTED PER DECK SCHEDULE ON DETAIL 5/S007.2 . EXCLUDES BEAM AT ELEVATOR.
19. SEE ARCHITECTURAL FOR DETAILS AT ELEVATOR DOOR SILL AND SHAFT WALL CONSTRUCTION.
20. PROVIDE AESS AT ALL EXPOSED STEEL FRAMING PER NOTE #18 OF THE STRUCTURAL STEEL NOTES ON SHEET S001.2.

SECOND FLOOR DESIGN LOADS

FLOOR DEAD LOAD	
CONCRETE OVER STEEL DECK (6 1/2" TOTAL)	64.8 PSF
CONCRETE OVERPOUR (3/8" FOR 3/4" TYP. CAMBER)	4.7 PSF
SUSPENDED CEILING W/ ELECTRICAL	2.5 PSF
MECHANICAL	1.0 PSF
SPRINKLERS	2.0 PSF
INTERIOR WALLS	5.0 PSF
MISCELLANEOUS	2.0 PSF
TOTAL	**82.0 PSF**
(SEISMIC MASS	87.0 PSF = SELF WT)
FLOOR LIVE LOAD	
LIVE LOAD - TYPICAL	80.0 PSF
LIVE LOAD - CORRIDOR	100.0 PSF
LIVE LOAD - BALCONY	100.0 PSF

LEGEND

- GRID BUBBLE AND NUMBER. SEE ARCHITECTURAL DRAWING PACKAGE FOR DETAILED DIMENSIONS OF ALL GRIDS SHOWN.
- SECTION/ ELEVATION MARK. SEE REFERENCING DETAIL NUMBER AND SHEET NUMBER FOR ADDITIONAL INFORMATION.
- DETAIL MARK. SEE REFERENCING DETAIL NUMBER AND SHEET NUMBER FOR ADDITIONAL INFORMATION.
- ELEVATION MARK
  T.O.W. = TOP OF WALL
  T.O.F. = TOP OF FOOTING
  T.O.S. = TOP OF STEEL
- COLUMN TAG. SEE COLUMN SCHEDULE ON FOUNDATION PLAN FOR ADDITIONAL INFORMATION.
- INDICATES STUD WALLS ABOVE ROOF FRAMING LEVEL. FOR STUD SIZES, SPACING AND ARCHITECTURAL WALL TYPES, SEE ARCHITECTURAL DRAWINGS. FOR WALL FRAMING SEE DETAIL 4/S004.2
- INDICATES STUD WALL BELOW FRAMING LEVEL.
- FRAME BEAM ID
  n = NUMBER OF STUDS
  c = CAMBER
  * = SPECIAL CONNECTION AT MOMENT FRAME PER 18/S012.2
- STEEL DECK W/ CONCRETE TOPPING. FOR ADDITIONAL INFORMATION SEE 2/S007.2
- INDICATES 6" HIGH CONCRETE CURB. SEE ARCH. FOR CURB WIDTH
- INDICATES FLOOR DECK OPENING, SEE DETAIL 5/S007.2
- INDICATES BEAM AS PART OF LFRS AND MOMENT CONNECTION. SEE DETAIL A/S012.2 FOR ADDITIONAL INFORMATION
- INDICATES BEAM AS PART OF LFRS AND CONNECTION TO BE MADE WITH ASTM A490 BOLTS w/ CLASS B FAYING SURFACE (SLIP-CRITICAL). FOR SIZE AND QUANTITY OF BOLTS SEE DETAIL 20/S011.2
- INDICATES CANTILEVERED MOMENT CONNECTION. SEE DETAIL 15/S010.2 FOR ADDITIONAL INFORMATION, U.N.O.
- INDICATES FLOOR BOX. SEE ELECTRICAL DRAWINGS AND DETAIL 19/S007.2

NORTH

IDENTIFICATION STAMP
DIV. OF THE STATE ARCHITECT
APP: 02-122821 INC: 2
REVIEWED FOR
SS ☑ FLS ☑ ACS ☑
DATE: 11/20/2025

MARK	DATE	DESCRIPTION
A	11/13/2025	DSA BACKCHECK

Teter, Inc. expressly reserves its common law copyright and other property rights in these plans. This document, the ideas and designs incorporated herein, as an instrument of professional service, is not to be used in whole or part, for any other project, without prior written authorization.

REGISTERED PROFESSIONAL ENGINEER ★ ERIC S. BALTZ ★ No. 55606 ★ STRUCTURAL ★ STATE OF CALIFORNIA

TETER, INC.
FRESNO HEADQUARTERS
VISALIA | BAKERSFIELD | MODESTO | SAN LUIS OBISPO
ARCHITECTS ENGINEERS CONNECTED

VISALIA CAMPUS UNIVERSITY CENTER
COLLEGE OF THE SEQUOIAS
915 S. MOONEY BLVD
VISALIA, CALIFORNIA

DRAWING TITLE
2ND FLOOR (UPPER) FRAMING PLAN

PROJECT NO.
22-12498

DRAWING
S202.2

\\tetr-file1\Users\luis.valtierra\Documents\12498-S-UC_luis.valtierra.rvt

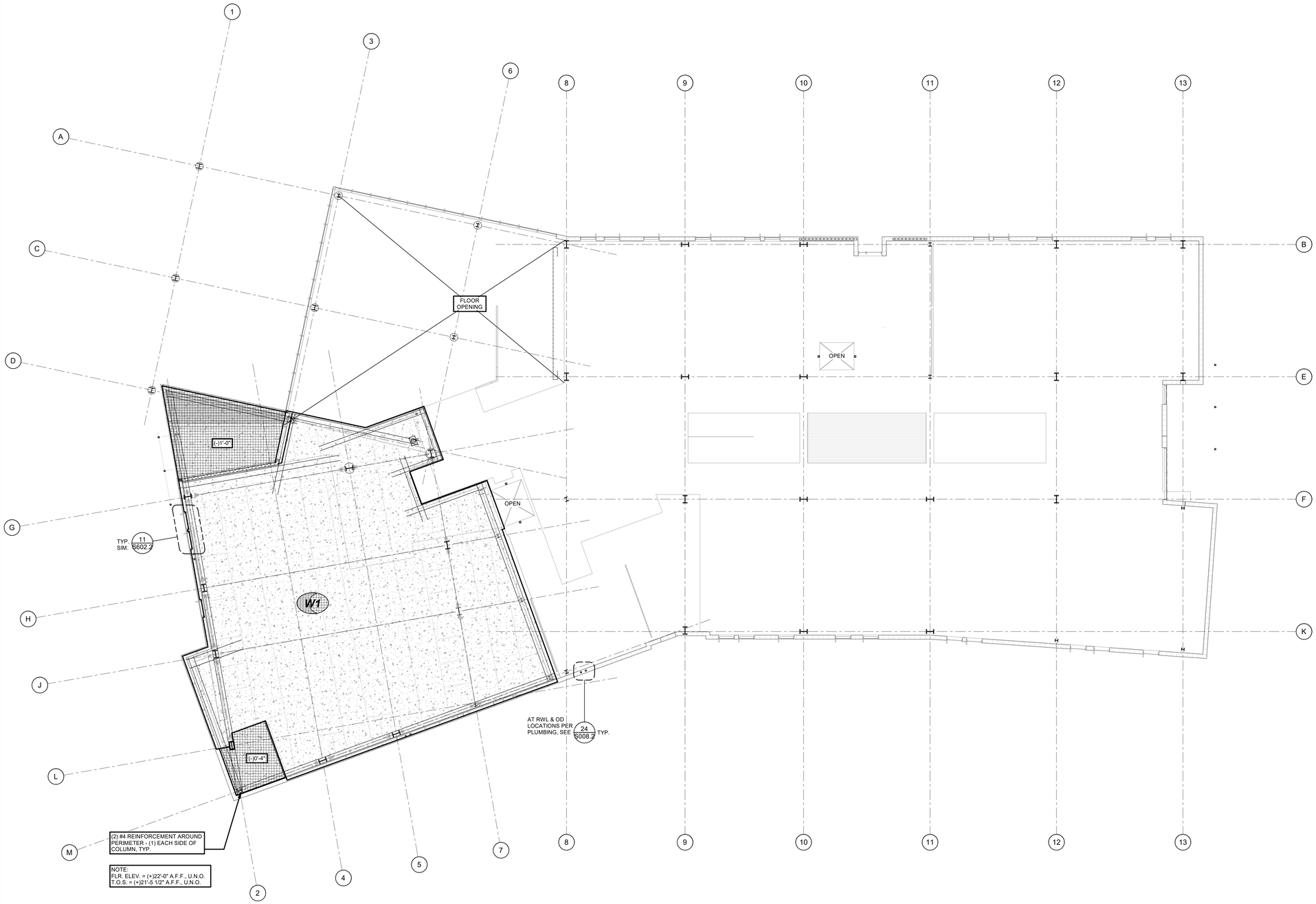

FLOOR DIAPHRAGM NOTES

1. DOWELS ATTACHED TO PLATES MAY BE PLACED ABOVE W.W.M.
2. LAP BARS PER DETAIL 1 S002.2.
3. FOR OPENINGS LARGER THAN 24" SQ. NOT SHOWN PROVIDE (1) #4 TRIM BAR EACH SIDE. EXTEND 4'-0" PAST EDGE OF OPENING.
4. AT RE-ENTRANT CORNERS, PROVIDE (2) #4 TRIM BARS EACH SIDE. EXTEND TRIM BARS AND PERIMETER BARS 4'-0" PAST EDGE OF CORNERS.
5. PROVIDE TYP. REINF. PER DETAILS ON SHEET S007.2.

LEGEND

- # — GRID BUBBLE AND NUMBER. SEE ARCHITECTURAL DRAWING PACKAGE FOR DETAILED DIMENSIONS OF ALL GRIDS SHOWN.
- 1 / S400 — SECTION/ ELEVATION MARK. SEE REFERENCING DETAIL NUMBER AND SHEET NUMBER FOR ADDITIONAL INFORMATION.
- 1 / S700 — DETAIL MARK. SEE REFERENCING DETAIL NUMBER AND SHEET NUMBER FOR ADDITIONAL INFORMATION.
- T.O.S. (+) 0'-0" — ELEVATION MARK
  T.O.W. = TOP OF WALL
  T.O.F. = TOP OF FOOTING
  T.O.S. = TOP OF STEEL
- CX — COLUMN TAG. SEE COLUMN SCHEDULE ON FOUNDATION PLAN FOR ADDITIONAL INFORMATION.
- INDICATES STUD WALLS ABOVE FRAMING LEVEL. FOR STUD SIZES, SPACING AND ARCHITECTURAL WALL TYPES, SEE ARCHITECTURAL DRAWINGS. FOR WALL FRAMING SEE DETAIL 4 / S004.2
- INDICATES STUD WALL BELOW FLOOR LEVEL.
- W16x26 (c=1") — FRAME BEAM ID, c = CAMBER
- W3 — STEEL DECK W/ CONCRETE TOPPING. FOR ADDITIONAL INFORMATION SEE 2 / S007.2
- INDICATES 6" HIGH CONCRETE CURB. SEE ARCH. FOR CURB WIDTH
- INDICATES FLOOR DECK OPENING, SEE DETAIL 3 / S007.2
- INDICATES BEAM AS PART OF LFRS AND MOMENT CONNECTION. SEE DETAIL 5 / S012.2 FOR ADDITIONAL INFORMATION
- INDICATES BEAM AS PART OF LFRS AND CONNECTION TO BE MADE WITH ASTM A490 BOLTS w/ CLASS B FAYING SURFACE (SLIP-CRITICAL). FOR SIZE AND QUANTITY OF BOLTS SEE DETAIL 20 / S011.2
- INDICATES CANTILEVERED MOMENT CONNECTION. SEE DETAIL 15 / S010.2 FOR ADDITIONAL INFORMATION
- INDICATES FLOOR BOX. SEE ELECTRICAL DRAWINGS AND DETAIL 19 / S007.2

NORTH

IDENTIFICATION STAMP
DIV. OF THE STATE ARCHITECT
APP: 02-122821 INC: 2
REVIEWED FOR
SS ☑ FLS ☑ ACS ☑
DATE: 11/20/2025

Teter, Inc. expressly reserves its common law copyright and other property rights in these plans. This document, the ideas and designs incorporated herein, as an instrument of professional service, is not to be used in whole or part, for any other project without prior written authorization.

MARK	DATE	DESCRIPTION
A.	11/13/2025	DSA BACKCHECK

REGISTERED PROFESSIONAL ENGINEER ★ STRUCTURAL ★ STATE OF CALIFORNIA
E. S. BALTAZAR No. 55608
11/20/25

TETER, INC.
FRESNO HEADQUARTERS
VISALIA | BAKERSFIELD | MODESTO | SAN LUIS OBISPO
ARCHITECTS ENGINEERS CONNECTED

VISALIA CAMPUS UNIVERSITY CENTER
COLLEGE OF THE SEQUOIAS
915 S. MOONEY BLVD
VISALIA, CALIFORNIA

DRAWING TITLE
2ND FLOOR (UPPER) DIAPHRAGM PLAN

PROJECT NO.
22-12498

DRAWING
S203.2

\\tetr-file1\Users\luis.valiterra\Documents\12498-S-UC_luis.valiterra.rvt

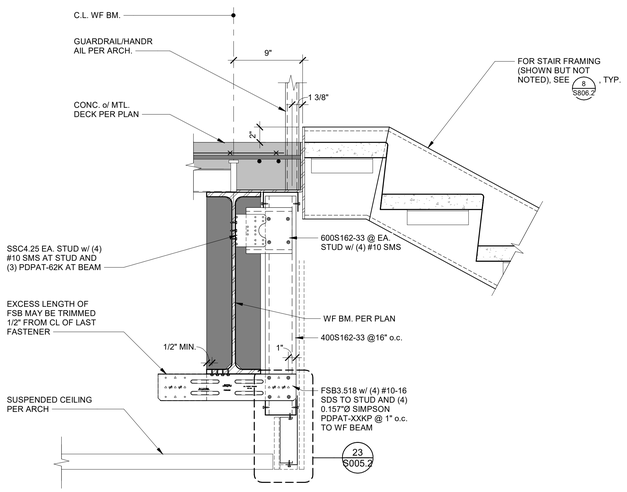

STAIR DETAIL - STAIR 2 & 3 — 1 1/2" = 1'-0" | 22

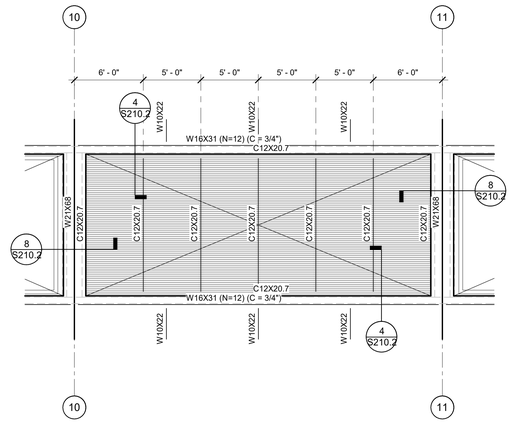

NORTH

SECOND FLOOR (LOWER) FRAMING PLAN - ENLARGED — 3/16" = 1'-0" | 2

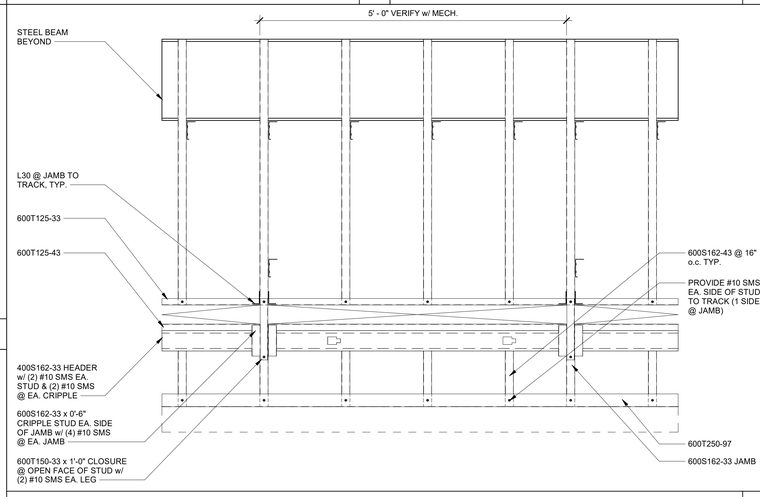

DETAIL — 1" = 1'-0" | 14

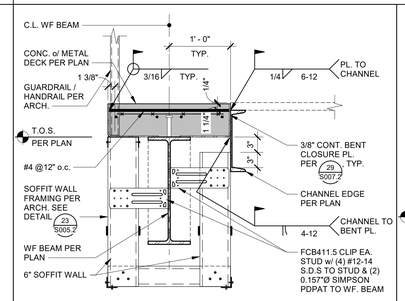

DETAIL — 1" = 1'-0" | 8

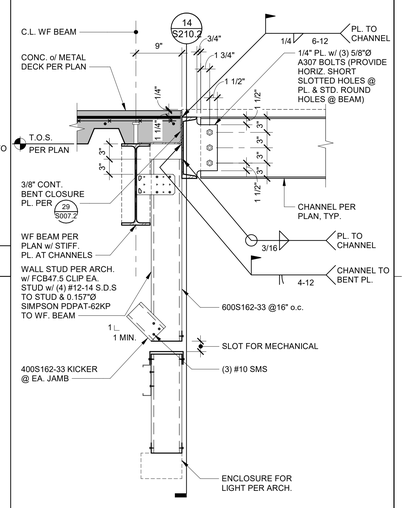

DETAIL — 1" = 1'-0" | 4

IDENTIFICATION STAMP
DIV. OF THE STATE ARCHITECT
APP: 02-122821 INC: 2
REVIEWED FOR
SS ☑ FLS ☑ ACS ☑
DATE: 11/20/2025

Teter, Inc. expressly reserves its common law copyright and other property rights in these plans. This document, the ideas and designs incorporated herein, as an instrument of professional service, is not to be used in whole or part, for any other project without prior written authorization.

MARK	DATE	DESCRIPTION
A	11/13/2025	DSA BACKCHECK

REGISTERED PROFESSIONAL ENGINEER LUIS A. VALITERRA No. 55609 STRUCTURAL STATE OF CALIFORNIA

TETER, INC.
FRESNO HEADQUARTERS
VISALIA | BAKERSFIELD | MODESTO | SAN LUIS OBISPO
ARCHITECTS ENGINEERS CONNECTED

TETER

VISALIA CAMPUS UNIVERSITY CENTER
COLLEGE OF THE SEQUOIAS
915 S. MOONEY BLVD
VISALIA, CALIFORNIA

DRAWING TITLE
2ND FLOOR FRAMING PLAN - PARTIAL

PROJECT NO.
22-12498

DRAWING
S210.2

PLOT DATE: 11/12/2025 7:25:07 PM

VISALIA CAMPUS UNIVERSITY CENTER
COLLEGE OF THE SEQUOIAS
915 S. MOONEY BLVD
VISALIA, CALIFORNIA

DRAWING TITLE
2ND FLOOR (LOWER) FRAMING PLAN - PARTIAL

PROJECT NO. 22-12498

DRAWING S211.2

TETER

TETER, INC.
FRESNO HEADQUARTERS
VISALIA | BAKERSFIELD | MODESTO | SAN LUIS OBISPO
ARCHITECTS ENGINEERS CONNECTED

MARK	DATE	DESCRIPTION
A	11/13/2025	DSA BACKCHECK

IDENTIFICATION STAMP
DIV. OF THE STATE ARCHITECT
APP: 02-12821 INC: 2
REVIEWED FOR
SS ☑ FLS ☑ ACS ☑
DATE: 11/20/2025

Teter, Inc. expressly reserves its common law copyright and other property rights in these plans. This document, the ideas and designs incorporated herein, as an instrument of professional service, is not to be used in whole or in part, for any other project without prior written authorization.

SECOND FLOOR (LOWER) FRAMING PLAN - PARTIAL

1/4" = 1'-0"

5

NORTH

PLOT DATE: 11/12/2025 7:25:12 PM

\\tetr-file1\Users\luis.vallierra\Documents\2498-S-UC_luis.vallierra.rvt

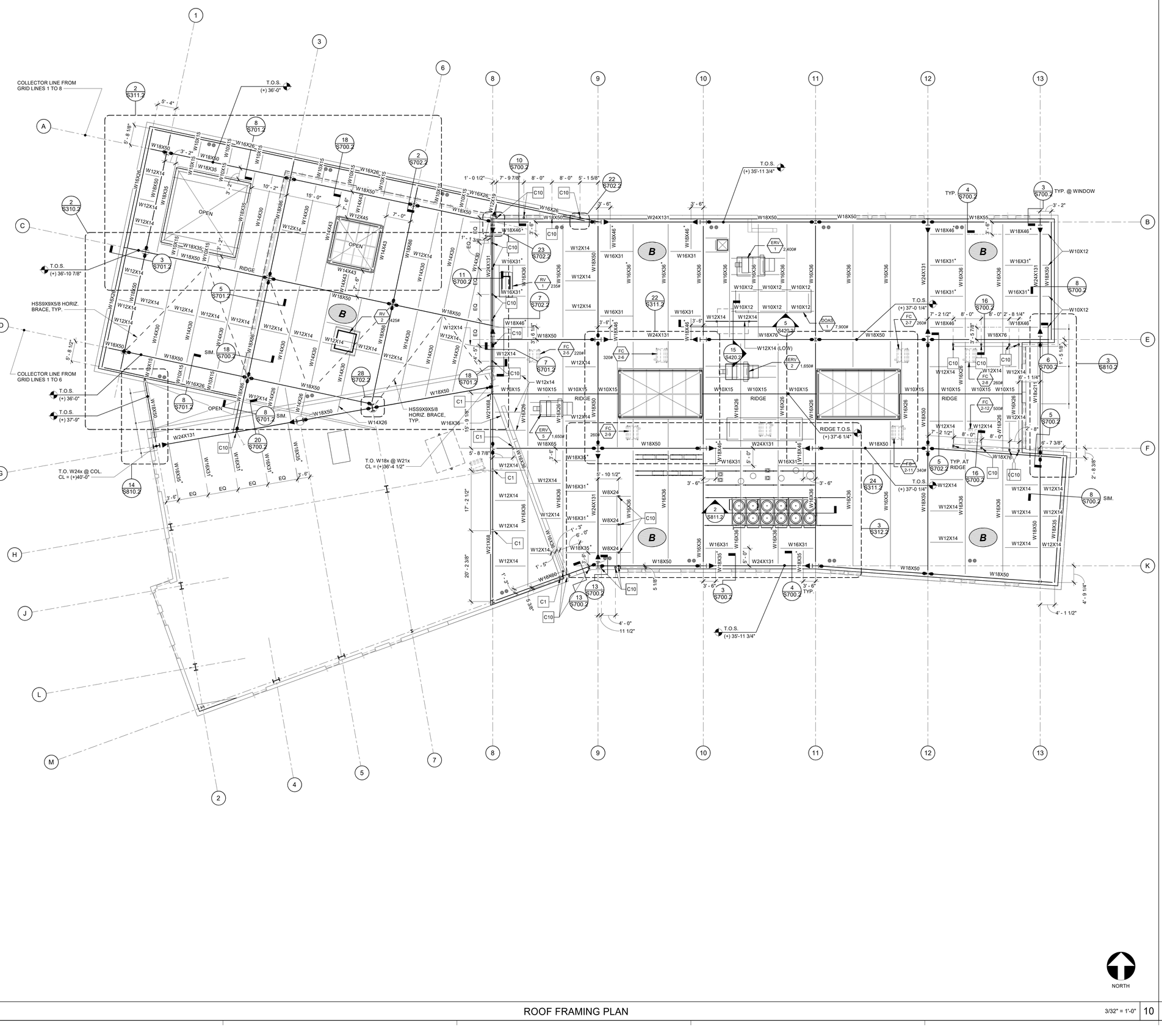

ROOF FRAMING NOTES

1. THE TYPICAL DETAILS SHOWN ON THE S0XX SERIES SHEETS SHALL APPLY IN ALL CASES, UNLESS SPECIFICALLY SHOWN OTHERWISE. WHERE NO DETAIL IS SHOWN, CONSTRUCTION SHALL BE AS SHOWN FOR SIMILAR WORK. SEE SHEET SPECIFICATIONS AND TYPICAL DETAILS FOR ADDITIONAL INFORMATION.
2. UNCLEAR, CONFLICTING AND/OR MISSING INFORMATION SHALL BE BROUGHT TO THE ENGINEER'S ATTENTION PRIOR TO CONSTRUCTION.
3. ALL DIMENSIONS ARE TO FACE OF WALL STUD OR CENTER OF COLUMN, U.N.O. COORDINATE ALL DIMENSIONS WITH ARCHITECTURAL DRAWINGS.
4. SEE FOUNDATION PLAN FOR COLUMNS SHOWN BUT NOT NOTED.
5. ALL ELEVATIONS ARE ESTABLISHED FROM AND RELATIVE TO FIRST FLOOR FINISHED SLAB (0'-0" DATUM), U.N.O. FOR ACTUAL ELEVATIONS, SEE CIVIL DRAWINGS.
6. STEEL MEMBERS ARE EQUALLY SPACED BETWEEN DIMENSION POINTS, U.N.O., AND SHALL FRAME TO CENTERLINE OF COLUMNS OR WORK POINT.
7. SEE ARCHITECTURAL DRAWINGS FOR WALL STUD SIZES AND SPACING, U.N.O.
8. SEE DETAILS FOR TYPICAL DECK TO BEAM CONNECTION CONDITIONS AT ALL STRUCTURAL MEMBERS. ENSURE FLUTE OF METAL DECK LANDS ON BEAM/JOIST. IF DECK FLUTE DOES NOT FULLY LAND ON MEMBERS, SEE DETAIL 10/S009.2
9. DO NOT SUSPEND PIPING, MAIN LINE CONDUITS OR OTHER UTILITIES FROM METAL DECK ALONE. SUSPENDED T-BAR CEILING WITH LIGHT FIXTURES AND SOFFIT FRAMING ARE ACCEPTABLE. HANGING LOADS SHALL BE SUPPORTED PER 1/S008.2
10. ALL MECHANICAL UNITS SHALL BE VERIFIED WITH MECHANICAL CONTRACTOR PRIOR TO CONSTRUCTION. SEE MECHANICAL DRAWINGS.
11. FOR TYPICAL FRAMING AT MECHANICAL CURB, SEE DETAIL 13/S008.2
12. SEE ARCHITECTURAL PLANS FOR PLUMBING PENETRATIONS.
13. FOR TYPICAL ROOF DRAIN SUPPORT, SEE DETAIL 9/S009.2
14. FOR STEEL BEAM-TO-BEAM AND BEAM-TO-COLUMN CONNECTIONS, SEE DETAIL 5/S011.2 FOR WF COLUMNS.
15. PROVIDE AESS AT ALL EXPOSED STEEL FRAMING PER NOTE #18 OF THE STRUCTURAL STEEL NOTES ON SHEET S001.2.

ROOF DESIGN LOADS

ROOF DEAD LOAD	
SINGLE PLY MEMBRANE + RE-ROOF	5.0 PSF
RIGID INSULATION - 6" POLYSTYRENE FOAM	1.5 PSF
1/2" DENSDECK	2.0 PSF
18" GAUGE STEEL "B" DECK	2.9 PSF
SUSPENDED CEILING W/ ELECTRICAL	2.5 PSF
SPRINKLERS	1.5 PSF
MECHANICAL	1.0 PSF
PHOTOVOLTAIC PANELS	5.0 PSF
MISCELLANEOUS	0.6 PSF
TOTAL (SEISMIC MASS	**22.0 PSF** 27.0 PSF + SELF WT)
ROOF LIVE LOAD	
LIVE LOAD	20.0 PSF REDUCIBLE

LEGEND

- (#) GRID BUBBLE AND NUMBER. SEE ARCHITECTURAL DRAWING PACKAGE FOR DETAILED DIMENSIONS OF ALL GRIDS SHOWN.
- 1/S400 SECTION/ ELEVATION MARK. SEE REFERENCING DETAIL NUMBER AND SHEET NUMBER FOR ADDITIONAL INFORMATION.
- 1/S700 DETAIL MARK. SEE REFERENCING DETAIL NUMBER AND SHEET NUMBER FOR ADDITIONAL INFORMATION.
- T.O.W. (+) 0'-0" ELEVATION MARK. T.O.W. = TOP OF WALL, T.O.F. = TOP OF FOOTING, T.O.S. = TOP OF STEEL
- W16x26 (c=1") FRAME BEAM ID, c = CAMBER
- INDICATES MOMENT CONNECTION. SEE DETAIL 5/S012.2 FOR ADDITIONAL INFORMATION
- INDICATES CONNECTION TO BE MADE WITH ASTM A490 BOLTS w/ CLASS B FAYING SURFACE (SLIP-CRITICAL). FOR SIZE AND QUANTITY OF BOLTS SEE DETAIL 20/S011.2
- INDICATES CANTILEVERED MOMENT CONNECTION. SEE DETAIL 15/S010.2 FOR ADDITIONAL INFORMATION
- B STEEL DECK. FOR ADDITIONAL INFORMATION SEE DETAIL 2/S009.2
- INDICATES A ROOF DRAIN. FOR TYPICAL FRAMING SEE DETAIL 9/S009.2
- INDICATES A ROOF OPENING. FOR TYPICAL FRAMING SEE DETAIL 14/S009.2
- RTU # XXX# INDICATES MECHANICAL ROOF TOP UNIT AND MAX. WEIGHT. FOR TYP. SUPPORT AND ATTACHMENT DETAILS SEE MECHANICAL DRAWINGS AND DETAIL 13/S008.2

IDENTIFICATION STAMP
DIV. OF THE STATE ARCHITECT
APP: 02-122821 INC: 2
REVIEWED FOR
SS ☑ FLS ☑ ACS ☑
DATE: 11/20/2025

Teter, Inc. expressly reserves its common law copyright and other property rights in these plans. This document, the ideas and designs incorporated herein, as an instrument of professional service, is not to be used in whole or part, for any other project without prior written authorization.

MARK	DATE	DESCRIPTION
A.	11/13/2025	DSA BACKCHECK

REGISTERED PROFESSIONAL ENGINEER STEVEN S. BALTAZAR No. 55609 STRUCTURAL STATE OF CALIFORNIA

TETER, INC.
FRESNO HEADQUARTERS
VISALIA | BAKERSFIELD | MODESTO | SAN LUIS OBISPO
ARCHITECTS ENGINEERS CONNECTED

VISALIA CAMPUS UNIVERSITY CENTER
COLLEGE OF THE SEQUOIAS
915 S. MOONEY BLVD
VISALIA, CALIFORNIA

DRAWING TITLE: ROOF FRAMING PLAN (LOWER)

PROJECT NO. 22-12498

DRAWING S300.2

PLOT DATE: 11/12/2025 7:25:20 PM

\\tet-file1\Users\luis.valtierra\Documents\12498-S-UC_luis.valtierra.rvt

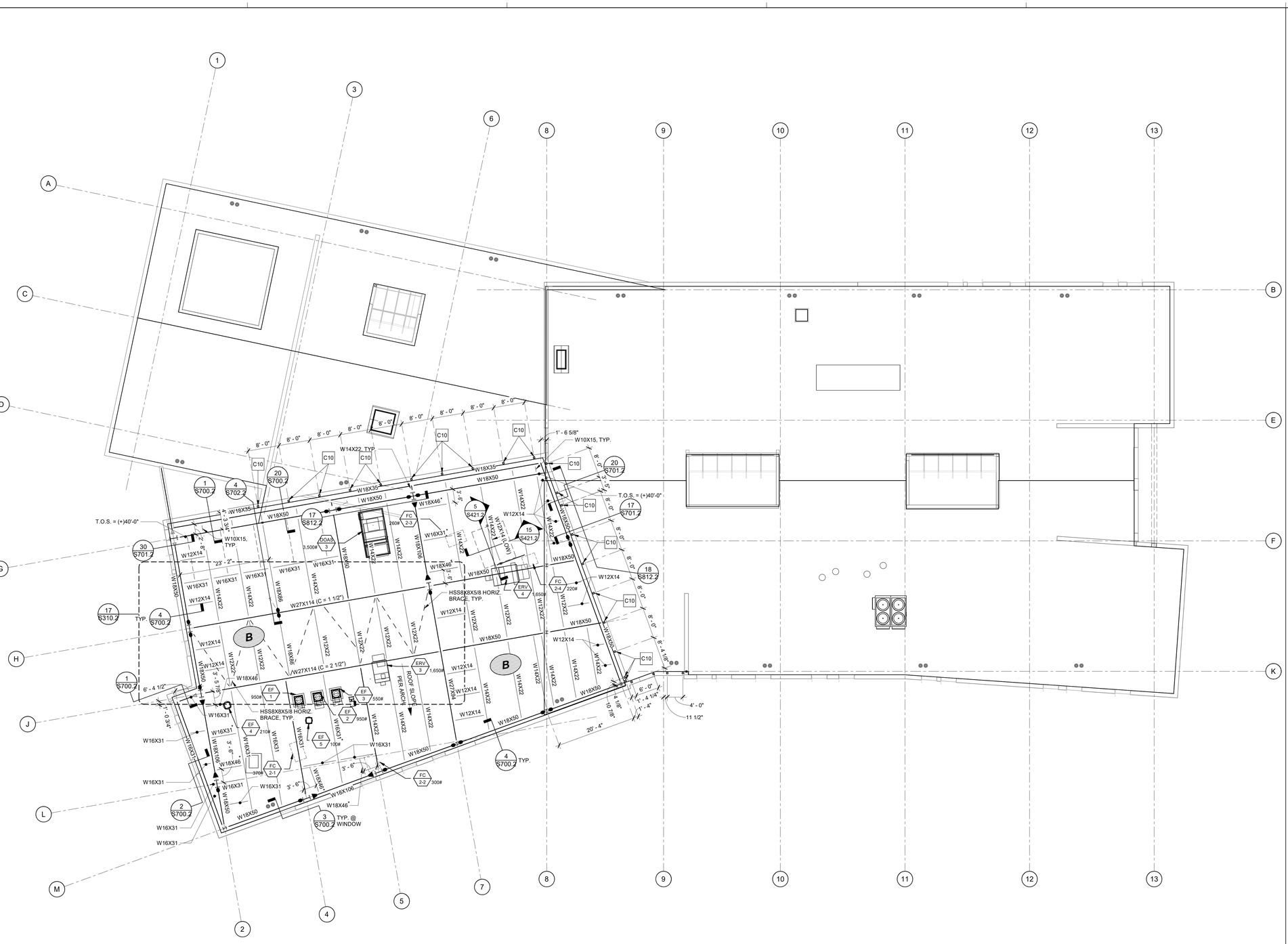
T.O.S. = (+)40'-0"
T.O.W. = (+)40'-0"
W10X15, TYP.
W14X22, TYP.
W18X35
W18X50
W18X46
W16X31
W12X14
W18X60
W18X106
W27X114 (C = 1 1/2")
HSS8X8X5/8 HORIZ. BRACE, TYP.
ROOF SLOPE PER ARCH
W12X14 (TYP.)
W14X22
W16X40
W16X50
W16X100
W16X89
W16X26
W16X67
W16X57
W16X45
W16X36
W16X31
W16X3
W10X68
W10X49
W10X33
W8X31
W8X24
W8X18
W8X10
W8X67
W8X48
W8X35
W8X28
W8X21
W8X15
W8X13
W8X40
W8X58

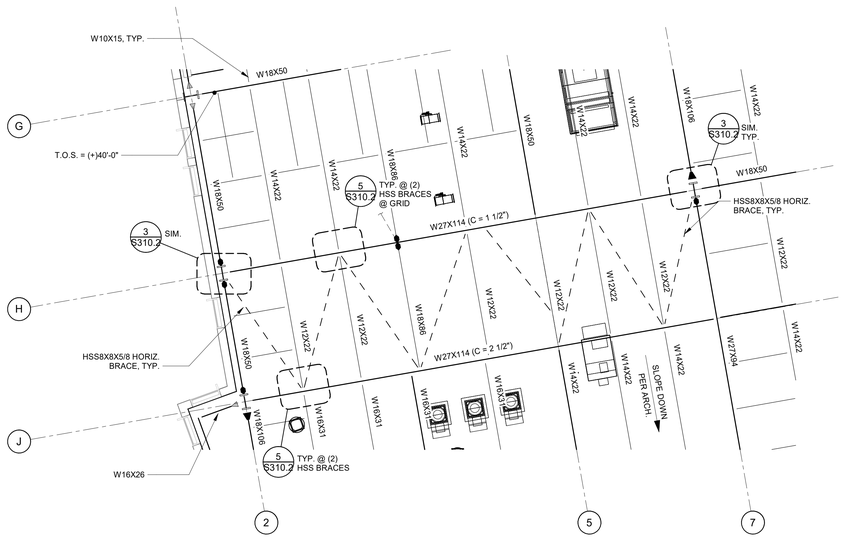

ROOF FRAMING PLAN - PARTIAL (UPPER) 1/8" = 1'-0" 17

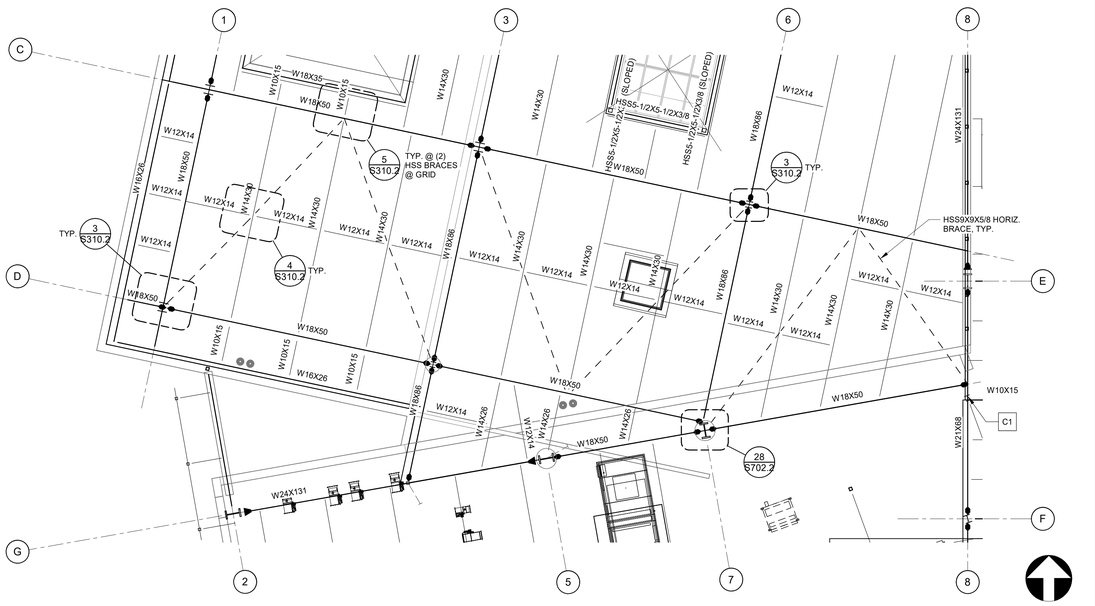

ROOF FRAMING PLAN - PARTIAL (LOWER) 1/8" = 1'-0" 2

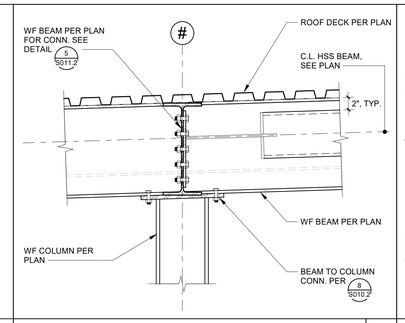

ROOF DETAIL - SECTION 1" = 1'-0" 8

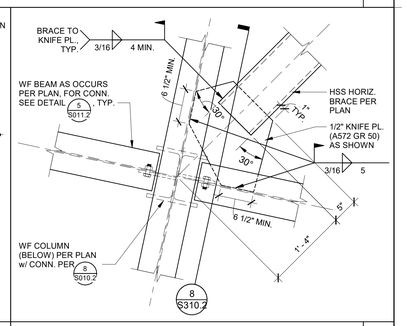

ROOF DETAIL - PLAN 1" = 1'-0" 3

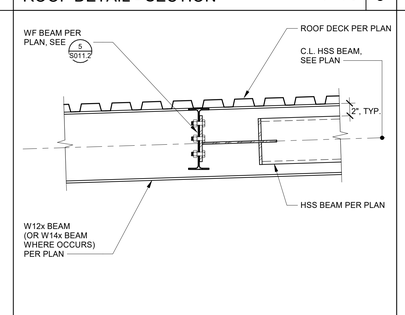

ROOF DETAIL - SECTION 1" = 1'-0" 9

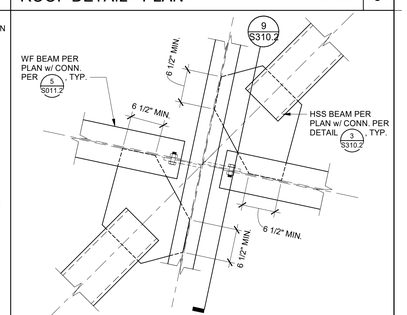

ROOF DETAIL - PLAN 1" = 1'-0" 4

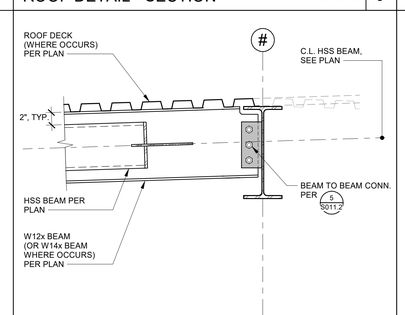

ROOF DETAIL - SECTION 1" = 1'-0" 10

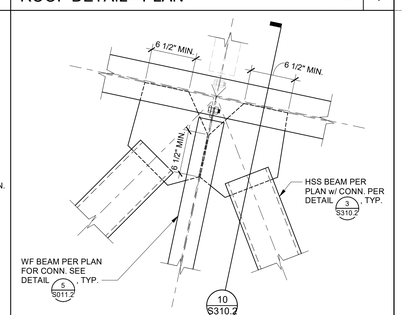

ROOF DETAIL - PLAN 1" = 1'-0" 5

IDENTIFICATION STAMP
DIV. OF THE STATE ARCHITECT
APP: 02-122821 INC: 2
REVIEWED FOR
SS ☑ FLS ☑ ACS ☑
DATE: 11/20/2025

Teter, Inc. expressly reserves its common law copyright and other property rights in these plans. This document, the ideas and designs incorporated herein, as an instrument of professional service, is not to be used in whole or in part, for any other project without prior written authorization.

MARK	DATE	DESCRIPTION
A	11/13/2025	DSA BACKCHECK

REGISTERED PROFESSIONAL ENGINEER
ERIC S. BAILEY
No. 35609
STRUCTURAL
STATE OF CALIFORNIA

TETER, INC.
FRESNO HEADQUARTERS
VISALIA | BAKERSFIELD | MODESTO | SAN LUIS OBISPO
ARCHITECTS ENGINEERS CONNECTED

VISALIA CAMPUS UNIVERSITY CENTER
COLLEGE OF THE SEQUOIAS
915 S. MOONEY BLVD
VISALIA, CALIFORNIA

DRAWING TITLE
ROOF FRAMING PLANS - PARTIAL

PROJECT NO.
22-12498

DRAWING
S310.2

PLOT DATE: 11/12/2025 7:25:31 PM

\\tetr-file1\Users\luis.valtierra\Documents\12498-S-UC_luis.valtierra.rvt

\\tetr-file1\Users\luis.valtierra\Documents\12498-S-UC_luis.valtierra.rvt

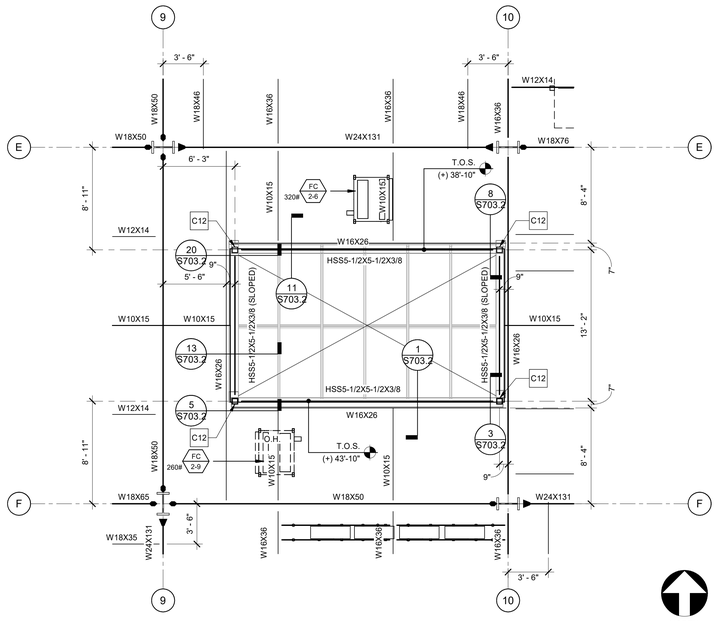

ROOF FRAMING PLAN - PARTIAL 3/16" = 1'-0" | 22

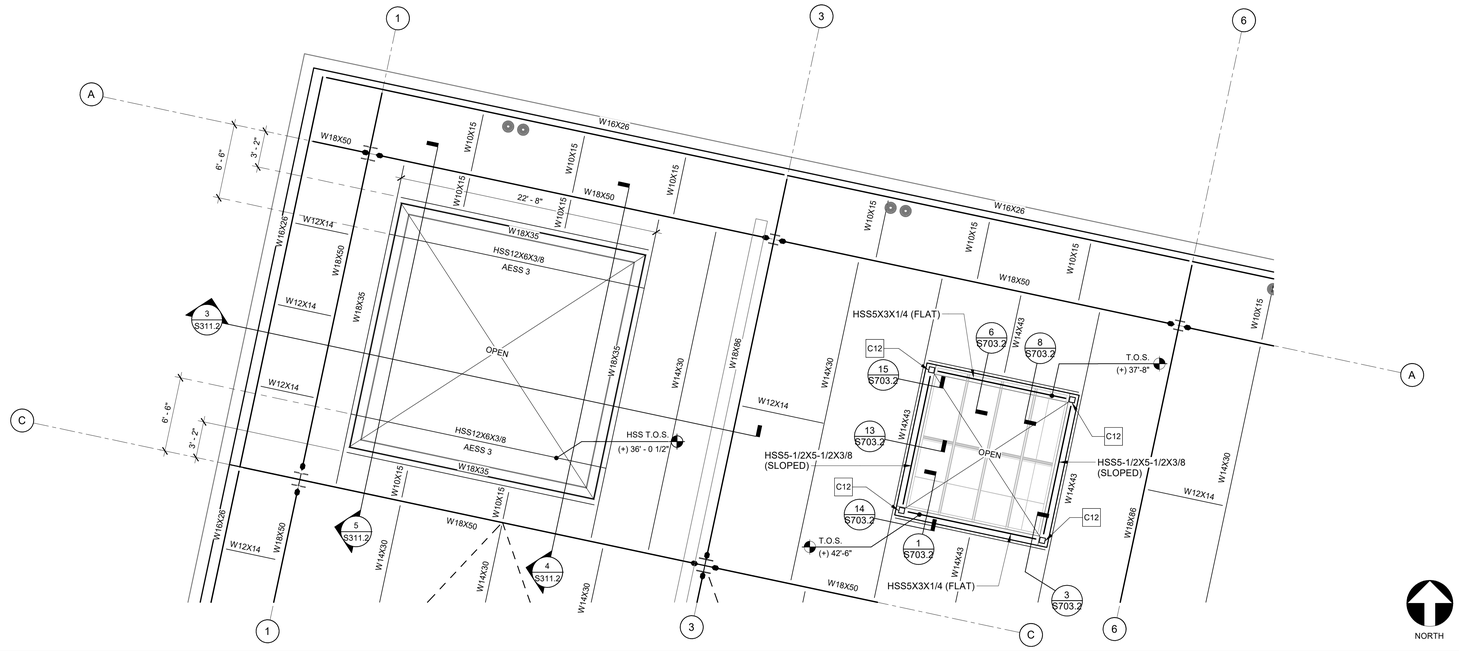

ROOF FRAMING PLAN - PARTIAL (LOWER) 3/16" = 1'-0" | 2

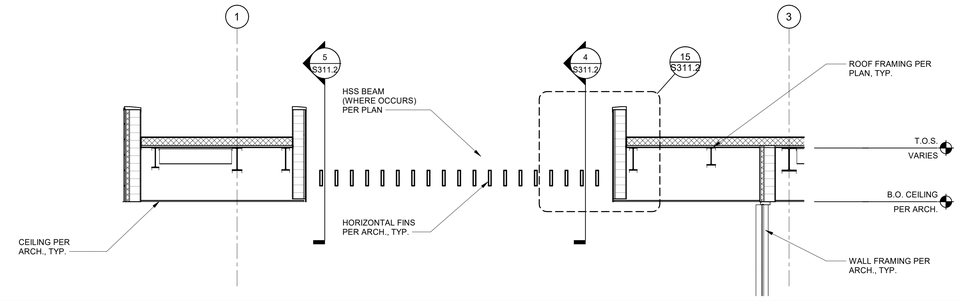

SECTION 1/4" = 1'-0" | 3

ROOF FRAMING PLAN - PARTIAL 3/16" = 1'-0" | 24

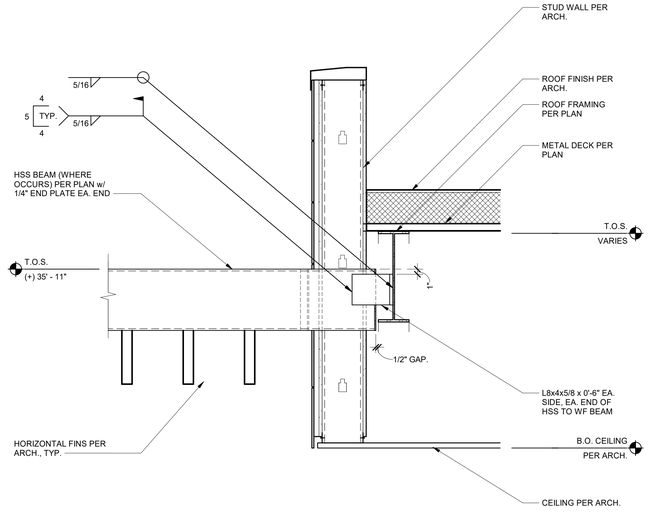

DETAIL 1" = 1'-0" | 15

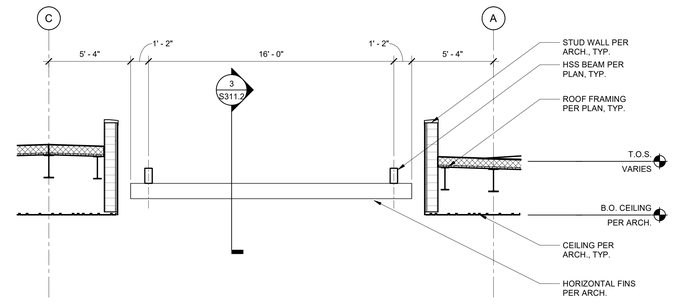

SECTION 1/4" = 1'-0" | 4

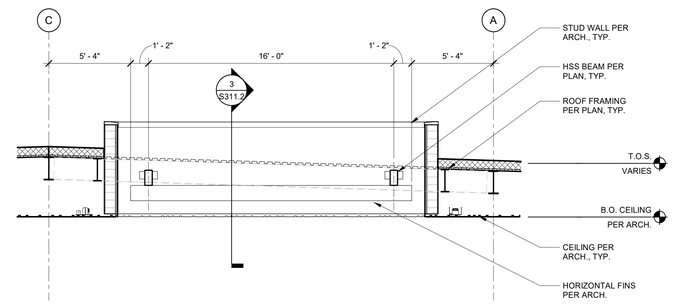

SECTION 1/4" = 1'-0" | 5

PLOT DATE: 11/12/2025 7:25:44 PM

IDENTIFICATION STAMP
DIV. OF THE STATE ARCHITECT
APP: 02-122821 INC: 2
REVIEWED FOR
SS ☑ FLS ☑ ACS ☑
DATE: 11/20/2025

Teter, Inc. expressly reserves its common law copyright and other property rights in these plans. This document, the ideas and designs incorporated herein, as an instrument of professional service, is not to be used in whole or in part, for any other project without prior written authorization.

MARK	DATE	DESCRIPTION
A.	11/13/2025	DSA BACKCHECK

REGISTERED PROFESSIONAL ENGINEER
EMILY S. BAILEY
No. 35609
STRUCTURAL
STATE OF CALIFORNIA

TETER, INC.
ARCHITECTS ENGINEERS CONNECTED
FRESNO HEADQUARTERS
VISALIA | BAKERSFIELD | MODESTO | SAN LUIS OBISPO

TETER

VISALIA CAMPUS UNIVERSITY CENTER
COLLEGE OF THE SEQUOIAS
915 S. MOONEY BLVD
VISALIA, CALIFORNIA

DRAWING TITLE
ROOF FRAMING PLANS - PARTIAL

PROJECT NO.
22-12498

DRAWING
S311.2

IDENTIFICATION STAMP
DIV. OF THE STATE ARCHITECT
APP: 02-122821 INC: 2
REVIEWED FOR
SS ☑ FLS ☑ ACS ☑
DATE: 11/20/2025

Tetra, Inc. expressly reserves its common law copyright and other property rights in these plans. This document, the ideas and designs incorporated herein, as an instrument of professional service, is not to be used in whole or in part, for any other project without written authorization.

MARK	DATE	DESCRIPTION
A	11/13/2025	DSA BACKCHECK

TETER, INC.
FRESNO HEADQUARTERS
VISALIA | BAKERSFIELD | MODESTO | SAN LUIS OBISPO
ARCHITECTS ENGINEERS CONNECTED

VISALIA CAMPUS UNIVERSITY CENTER
COLLEGE OF THE SEQUOIAS
915 S. MOONEY BLVD
VISALIA, CALIFORNIA

DRAWING TITLE
ROOF FRAMING PLANS - PARTIAL

PROJECT NO. 22-12498

DRAWING S312.2

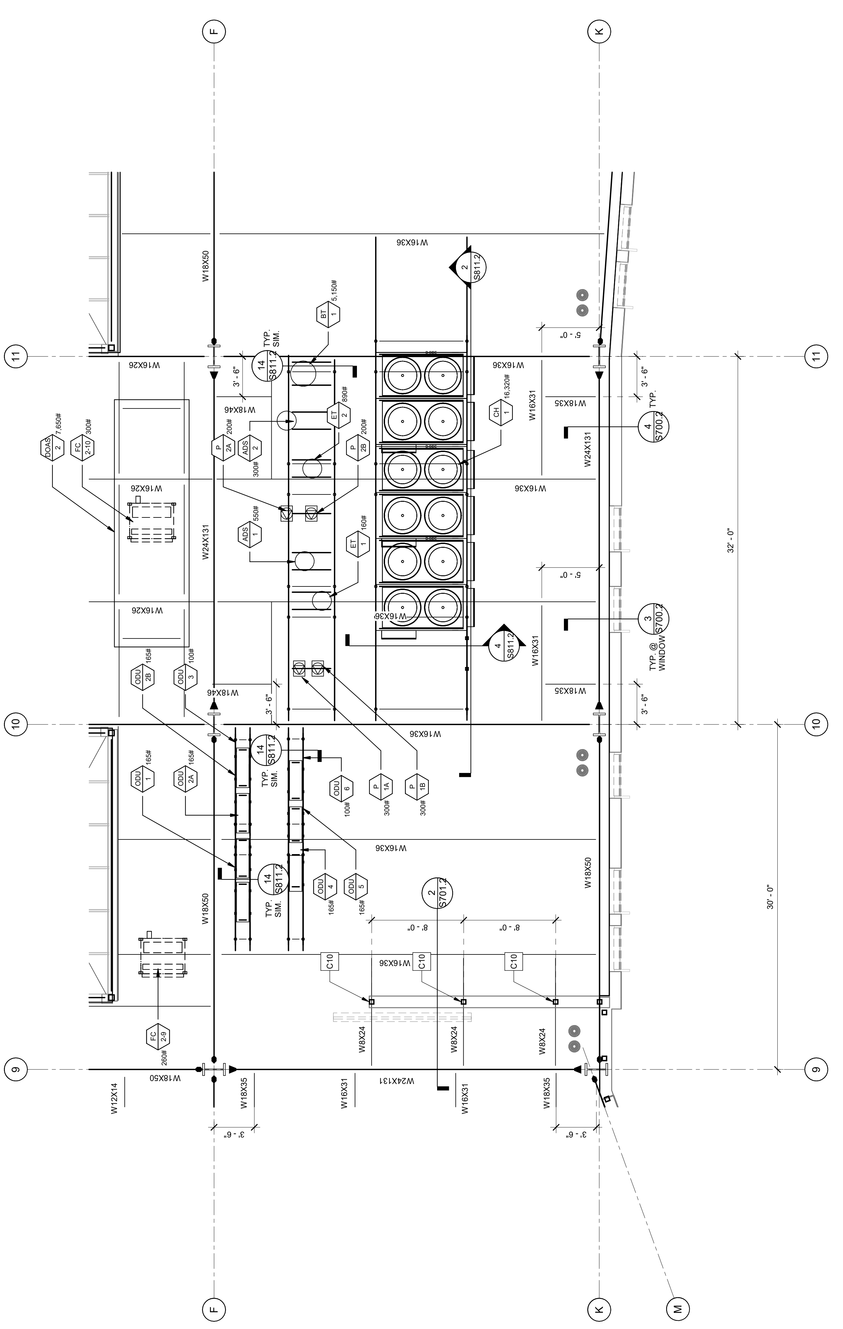

ROOF FRAMING PLAN - PARTIAL

3/16" = 1'-0" 3

PLOT DATE: 11/12/2025 7:25:49 PM

\\tetr-file1\Users\luis.vallierra\Documents\12498-S-UC_luis.vallierra.rvt

\\tetr-file1\Users\luis.valtierra\Documents\12498-S-UC_luis.valtierra.rvt

NOTE:
SEE MOMENT FRAME ELEVATION NOTES ON (5 / S400.2)

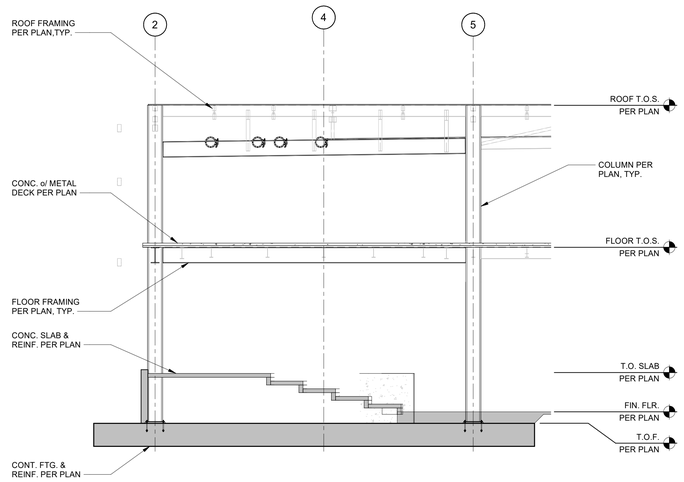

MOMENT FRAME AT GRID G LOOKING NORTH 1/8" = 1'-0" | 12

NOTE:
SEE MOMENT FRAME ELEVATION NOTES ON (5 / S400.2)

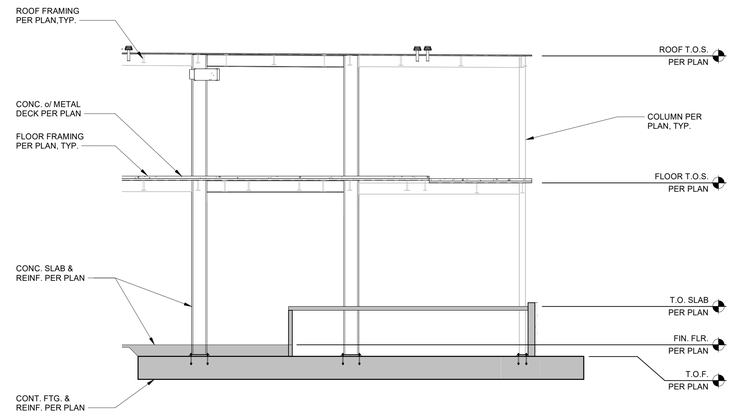

MOMENT FRAME AT GRID M LOOKING SOUTH 1/8" = 1'-0" | 2

NOTE:
SEE MOMENT FRAME ELEVATION NOTES ON (5 / S400.2)

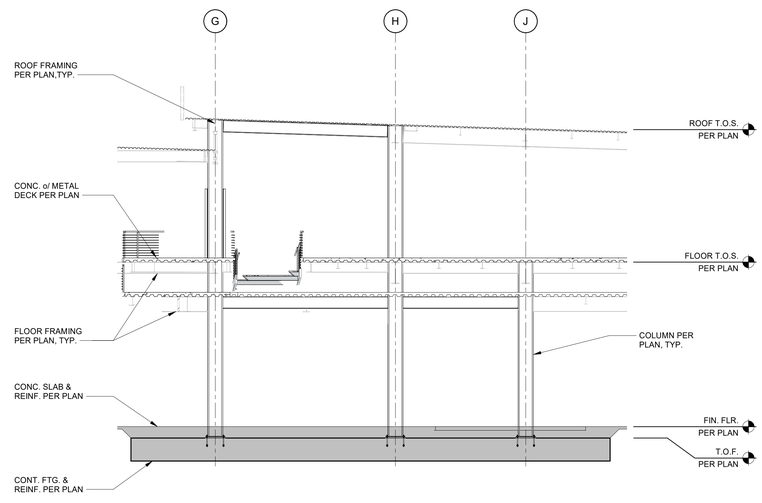

MOMENT FRAME AT GRID 7 LOOKING EAST 1/8" = 1'-0" | 14

NOTE:
SEE MOMENT FRAME ELEVATION NOTES ON (5 / S400.2)

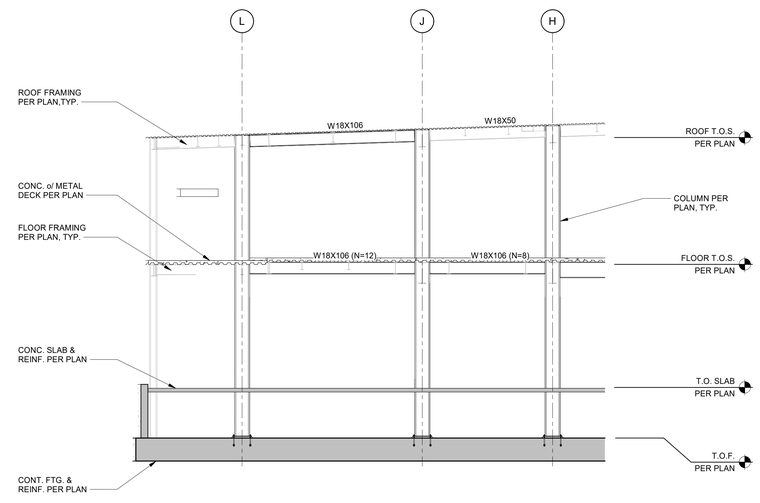

MOMENT FRAME AT GRID 2 LOOKING WEST 1/8" = 1'-0" | 4

1. SEE PLANS FOR COLUMN AND BEAM SIZES. ALL COLUMNS ARE CONTINUOUS, UNLESS NOTED OTHERWISE.
2. REFER TO FRAMING PLANS FOR T.O.S. UNLESS NOTED OTHERWISE.
3. ALL MEMBERS INDICATED IN THE MOMENT FRAME ELEVATIONS ARE PART OF THE LATERAL FORCE RESISTING SYSTEM (LFRS).
4. ALL WELDS ON MOMENT FRAMES SHALL MEET LATERAL FRAME (DEMAND CRITICAL) REQUIREMENTS, SEE GENERAL NOTES.
5. ALL WELDS TO BE PLACED PRIOR TO CONCRETE POURS.
6. FOR REQUIREMENTS AND SPECIAL INSPECTION OF WELDING SEE NOTE #10 OF THE STRUCTURAL STEEL NOTES AND SPECIAL INSPECTION SECTION ON SHEET S001.
7. ALL BEAM-TO-COLUMN MOMENT CONNECTIONS SHALL BE PER DETAIL (4 / S012.2), U.N.O.
8. ALL TYPICAL BEAM -TO-BEAM AND BEAM-TO-COLUMN (SHOWN LIGHT GRAY FOR CLARITY) CONNECTIONS SHALL BE PER DETAIL (5 / S011.2), U.N.O.
9. PERPENDICULAR STUD WALL FRAMING PER PLAN (SHOWN LIGHT GRAY FOR CLARITY). FOR TYPICAL WALL FRAMING SEE (4 / S004.2), U.N.O.
10. AT MF BEAMS PROVIDE CONNECTING BEAM ANGLE BRACE WHEN REQD. PER (--- / ---)
11. FOR TYPICAL FOUNDATION REINFORCING AT MOMENT FRAME COLUMNS, SEE (18 / S500.2)

MOMENT FRAME ELEVATION NOTES N.T.S. | 5

IDENTIFICATION STAMP
DIV. OF THE STATE ARCHITECT
APP: 02-122821 INC: 2
REVIEWED FOR
SS ☑ FLS ☑ ACS ☑
DATE: 11/20/2025

Teter, Inc. expressly reserves its common law copyright and other property rights in these plans. This document, the ideas and designs incorporated herein, as an instrument of professional service, is not to be used in whole or part, for any other project without prior written authorization.

MARK	DATE	DESCRIPTION
A	11/13/2025	DSA BACKCHECK

REGISTERED PROFESSIONAL ENGINEER * LUIS A. VALTIERRA * No. S5629 * STRUCTURAL * STATE OF CALIFORNIA

TETER, INC.
ARCHITECTS ENGINEERS CONNECTED
FRESNO HEADQUARTERS
VISALIA | BAKERSFIELD | MODESTO | SAN LUIS OBISPO

VISALIA CAMPUS UNIVERSITY CENTER
COLLEGE OF THE SEQUOIAS
915 S. MOONEY BLVD
VISALIA, CALIFORNIA

DRAWING TITLE
FRAME LINE ELEVATIONS

PROJECT NO.
22-12498

DRAWING
S400.2

PLOT DATE: 11/12/2025 7:25:57 PM

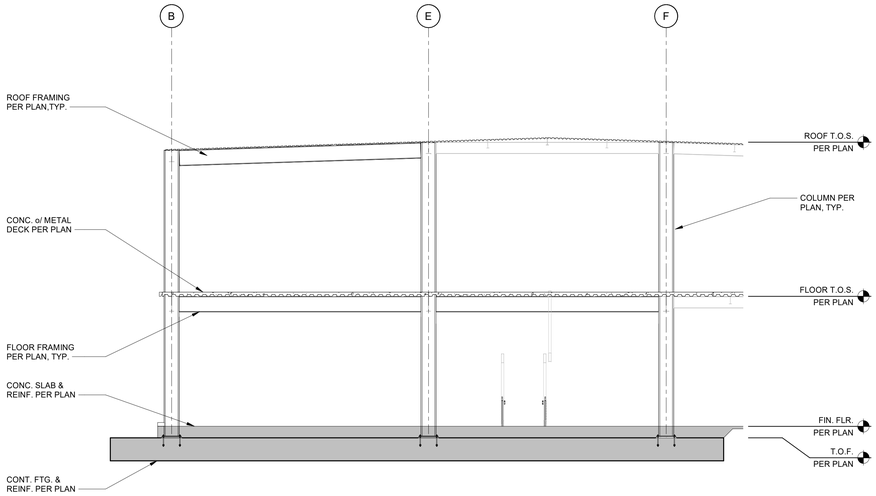

MOMENT FRAME AT GRID 12 LOOKING EAST 1/8" = 1'-0" 12

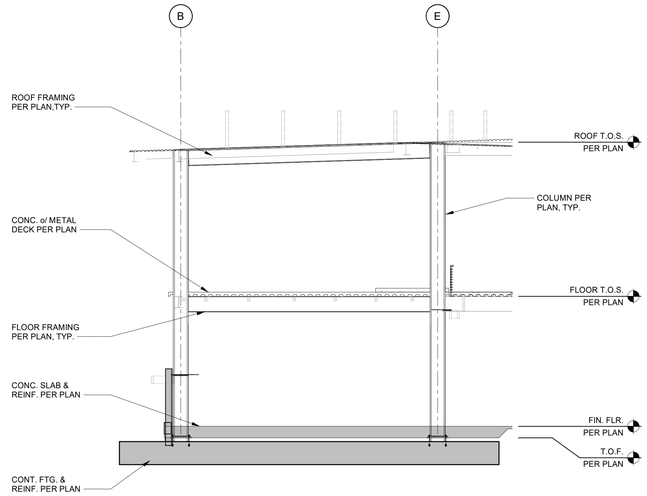

MOMENT FRAME AT GRID 8 LOOKING EAST 1/8" = 1'-0" 2

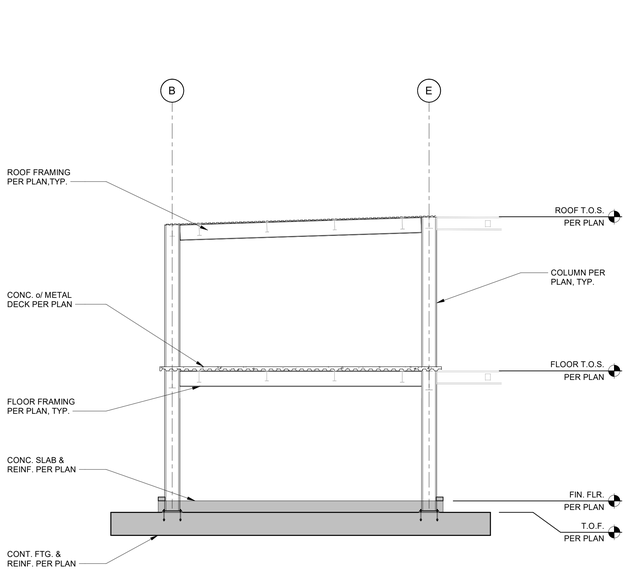

MOMENT FRAME AT GRID 13 LOOKING NORTH 1/8" = 1'-0" 14

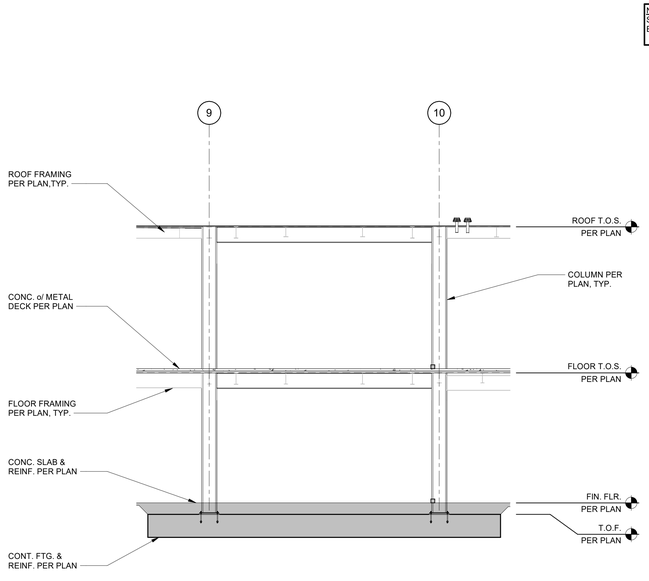

MOMENT FRAME AT GRID B LOOKING NORTH 1/8" = 1'-0" 4

IDENTIFICATION STAMP
DIV. OF THE STATE ARCHITECT
APP: 02-122821 INC: 2
REVIEWED FOR
SS ☑ FLS ☑ ACS ☑
DATE: 11/20/2025

Teter, Inc. expressly reserves its common law copyright and other property rights in these plans. This document, the ideas and designs incorporated herein, as an instrument of professional service, is not to be used in whole or in part, for any other project without prior written authorization.

MARK	DATE	DESCRIPTION
A	11/13/2025	DSA BACKCHECK

REGISTERED PROFESSIONAL ENGINEER
ERIC S. BAILEY
No. S5609
STRUCTURAL
STATE OF CALIFORNIA

TETER, INC.
FRESNO HEADQUARTERS
VISALIA | BAKERSFIELD | MODESTO | SAN LUIS OBISPO
ARCHITECTS ENGINEERS CONNECTED

VISALIA CAMPUS UNIVERSITY CENTER
COLLEGE OF THE SEQUOIAS
915 S. MOONEY BLVD
VISALIA, CALIFORNIA

DRAWING TITLE
FRAME LINE ELEVATIONS

PROJECT NO.
22-12498

DRAWING
S401.2

\\tetr-file1\Users\luis.valtierra\Documents\12498-S-UC_luis.valtierra.rvt
PLOT DATE: 11/12/2025 7:26:03 PM

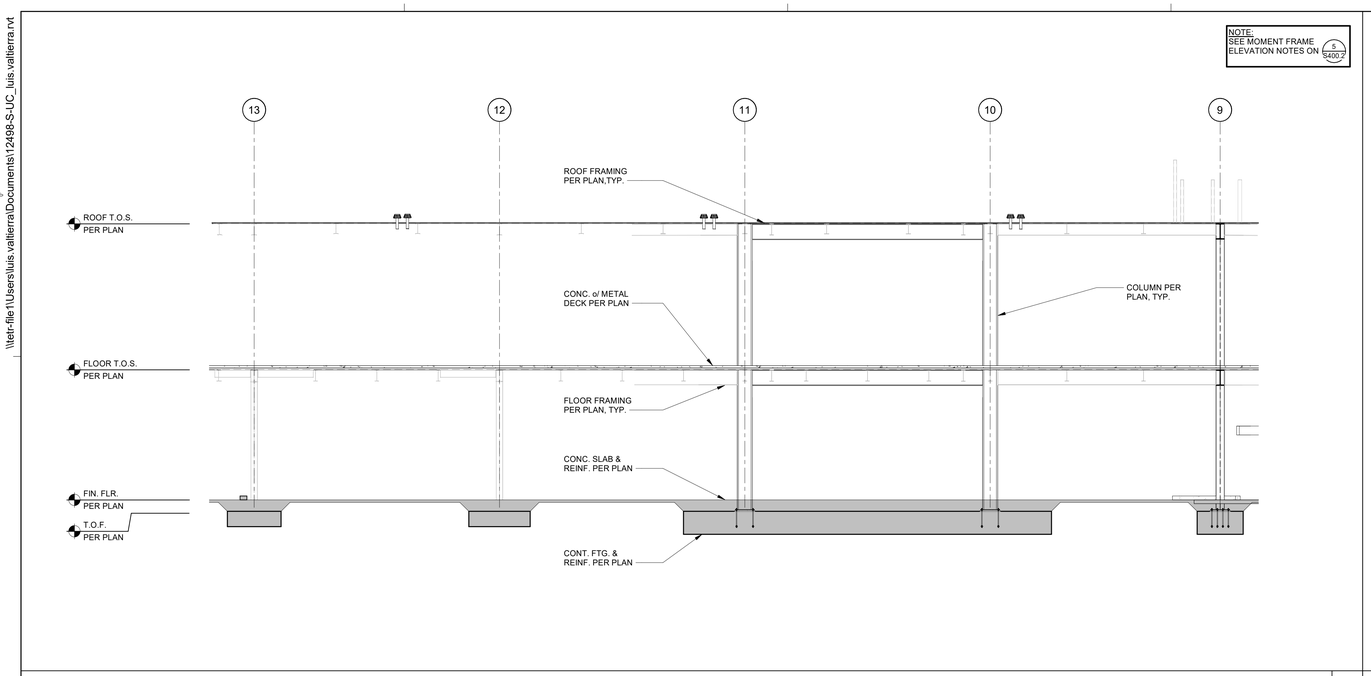

MOMENT FRAME AT GRID H LOOKING SOUTH 1/8" = 1'-0" 12

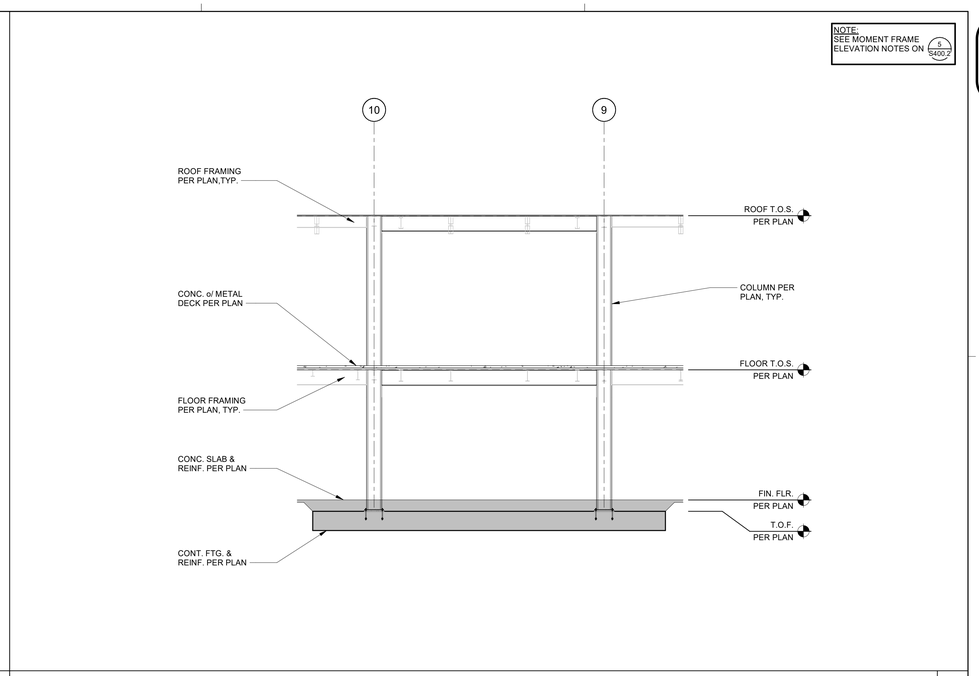

MOMENT FRAME AT GRID E LOOKING SOUTH 1/8" = 1'-0" 2

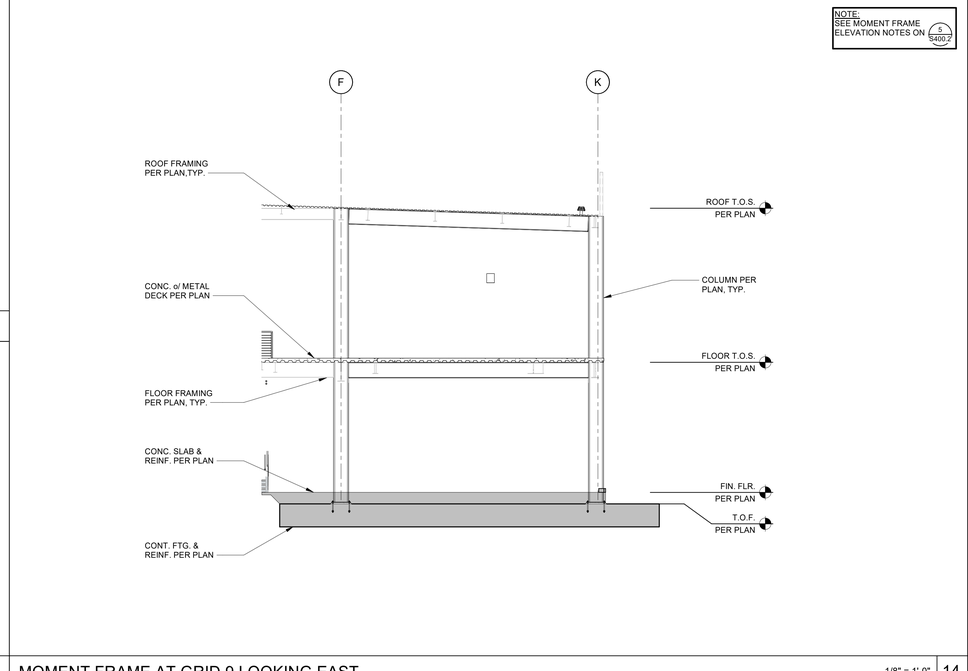

MOMENT FRAME AT GRID 9 LOOKING EAST 1/8" = 1'-0" 14

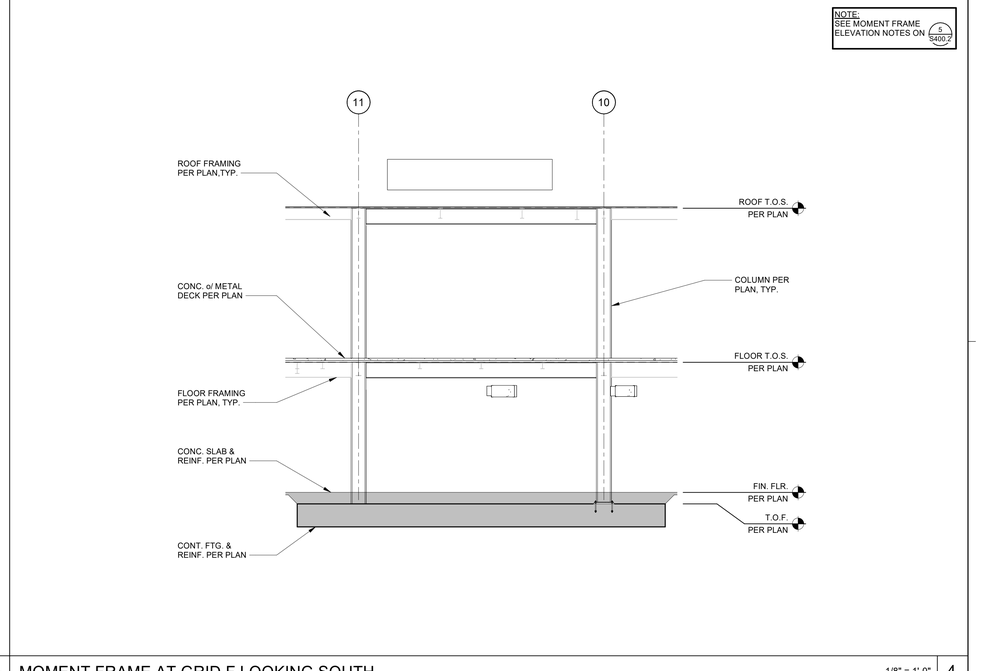

MOMENT FRAME AT GRID F LOOKING SOUTH 1/8" = 1'-0" 4

IDENTIFICATION STAMP
DIV. OF THE STATE ARCHITECT
APP: 02-122821 INC: 2
REVIEWED FOR
SS ☑ FLS ☑ ACS ☑
DATE: 11/20/2025

Teter, Inc. expressly reserves its common law copyright and other property rights in these plans. This document, the ideas and designs incorporated herein, as an instrument of professional service, is not to be used in whole or in part, for any other project without prior written authorization.

MARK	DATE	DESCRIPTION
A	11/13/2025	DSA BACKCHECK

REGISTERED PROFESSIONAL ENGINEER
FRIC S. BAILEY
No. 55609
STRUCTURAL
STATE OF CALIFORNIA

TETER, INC.
FRESNO HEADQUARTERS
VISALIA | BAKERSFIELD | MODESTO | SAN LUIS OBISPO
ARCHITECTS ENGINEERS CONNECTED

VISALIA CAMPUS UNIVERSITY CENTER
COLLEGE OF THE SEQUOIAS
915 S. MOONEY BLVD
VISALIA, CALIFORNIA

DRAWING TITLE
FRAME LINE ELEVATIONS

PROJECT NO.
22-12498

DRAWING
S402.2

PLOT DATE: 11/12/2025 7:26:10 PM

\\tetr-file1\Users\luis.valtierra\Documents\12498-S-UC_luis.valtierra.rvt

\\tetr-file1\Users\luis.valtierra\Documents\12498-S-UC_luis.valtierra.rvt

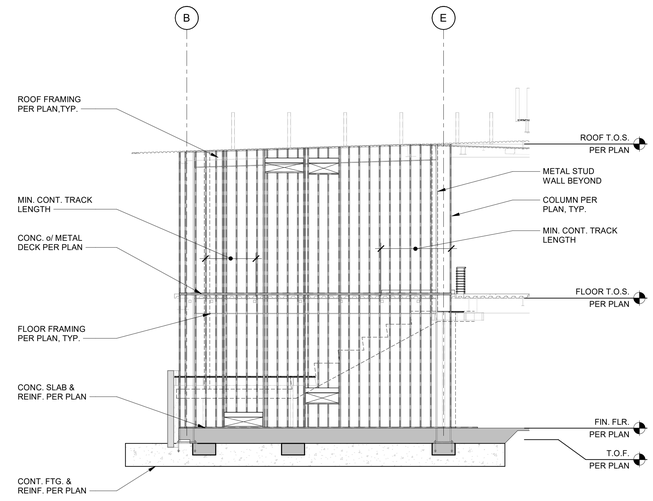

INTERIOR WALL FRAMING ELEVATION AT GRID 8 LOOKING EAST 1/8" = 1'-0" 2

IDENTIFICATION STAMP
DIV. OF THE STATE ARCHITECT
APP: 02-122821 INC: 2
REVIEWED FOR
SS ☑ FLS ☑ ACS ☑
DATE: 11/20/2025

Teter, Inc. expressly reserves its common law copyright and other property rights in these plans. This document, the ideas and designs incorporated herein, as an instrument of professional service, is not to be used in whole or part, for any other project without prior written authorization.

MARK	DATE	DESCRIPTION
A.	11/13/2025	DSA BACKCHECK



TETER, INC.
FRESNO HEADQUARTERS
VISALIA | BAKERSFIELD | MODESTO | SAN LUIS OBISPO
ARCHITECTS ENGINEERS CONNECTED

VISALIA CAMPUS UNIVERSITY CENTER
COLLEGE OF THE SEQUOIAS
915 S. MOONEY BLVD
VISALIA, CALIFORNIA

DRAWING TITLE
WALL FRAMING ELEVATIONS

PROJECT NO.
22-12498

DRAWING
S410.2

PLOT DATE: 11/12/2025 7:26:13 PM

\\tetr-file1\Users\luis.valtierra\Documents\12498-S-UC_luis.valtierra.rvt

PLOT DATE: 11/12/2025 7:26:17 PM

NOTE:
1. CONTRACTOR SHALL MARK EACH SIDE OF HOIST BEAM AT MID-SPAN AS FOLLOWS:
   A. ALLOWABLE VERTICAL LOAD 10,000 LBS
2. MARKING SHALL BE PROTECTED AND BE VISIBLE THROUGHOUT AND AFTER CONSTRUCTION.

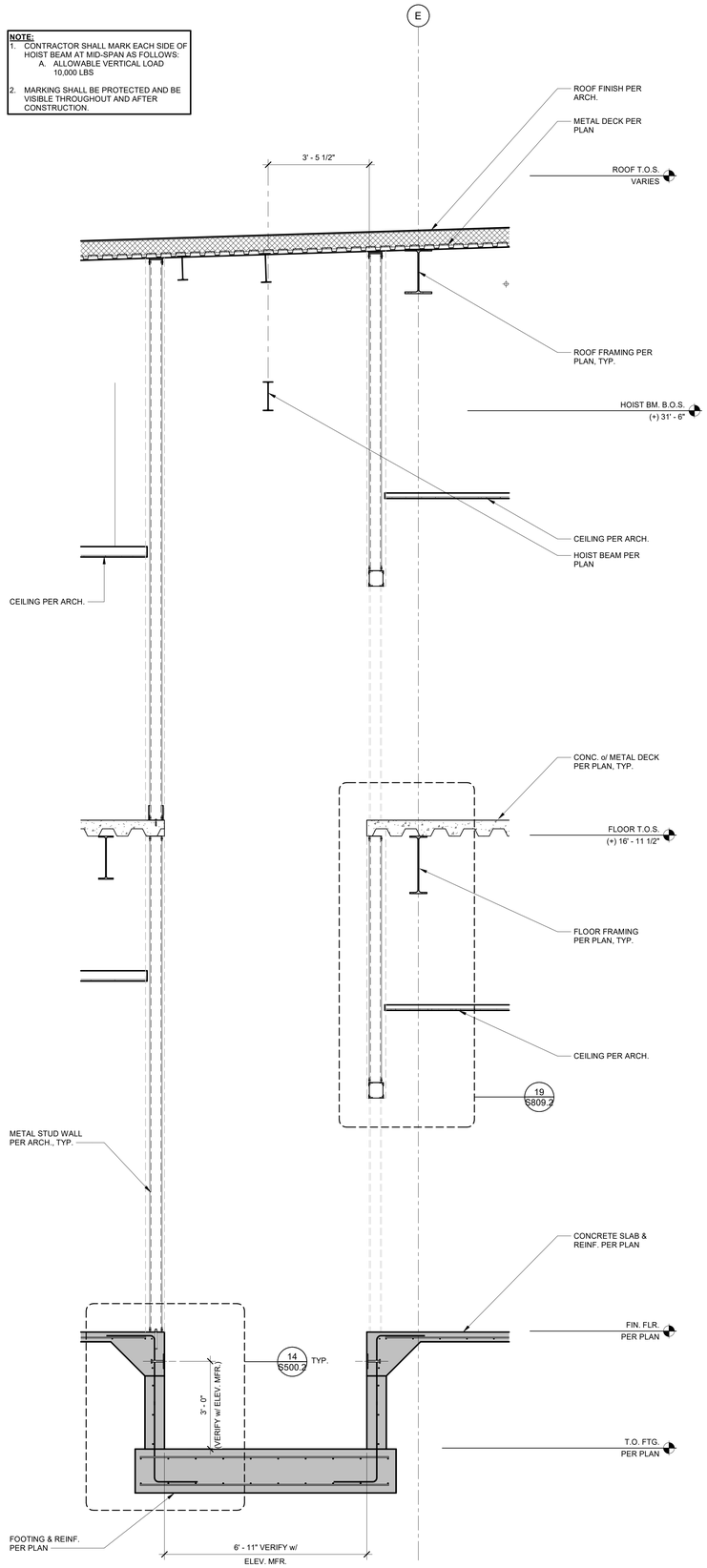

ELEVATOR 1 - NORTH EAST ELEVATOR LOOKING EAST 1/2" = 1'-0" 15

NOTE:
1. CONTRACTOR SHALL MARK EACH SIDE OF HOIST BEAM AT MID-SPAN AS FOLLOWS:
   A. ALLOWABLE VERTICAL LOAD 10,000 LBS
2. MARKING SHALL BE PROTECTED AND BE VISIBLE THROUGHOUT AND AFTER CONSTRUCTION.

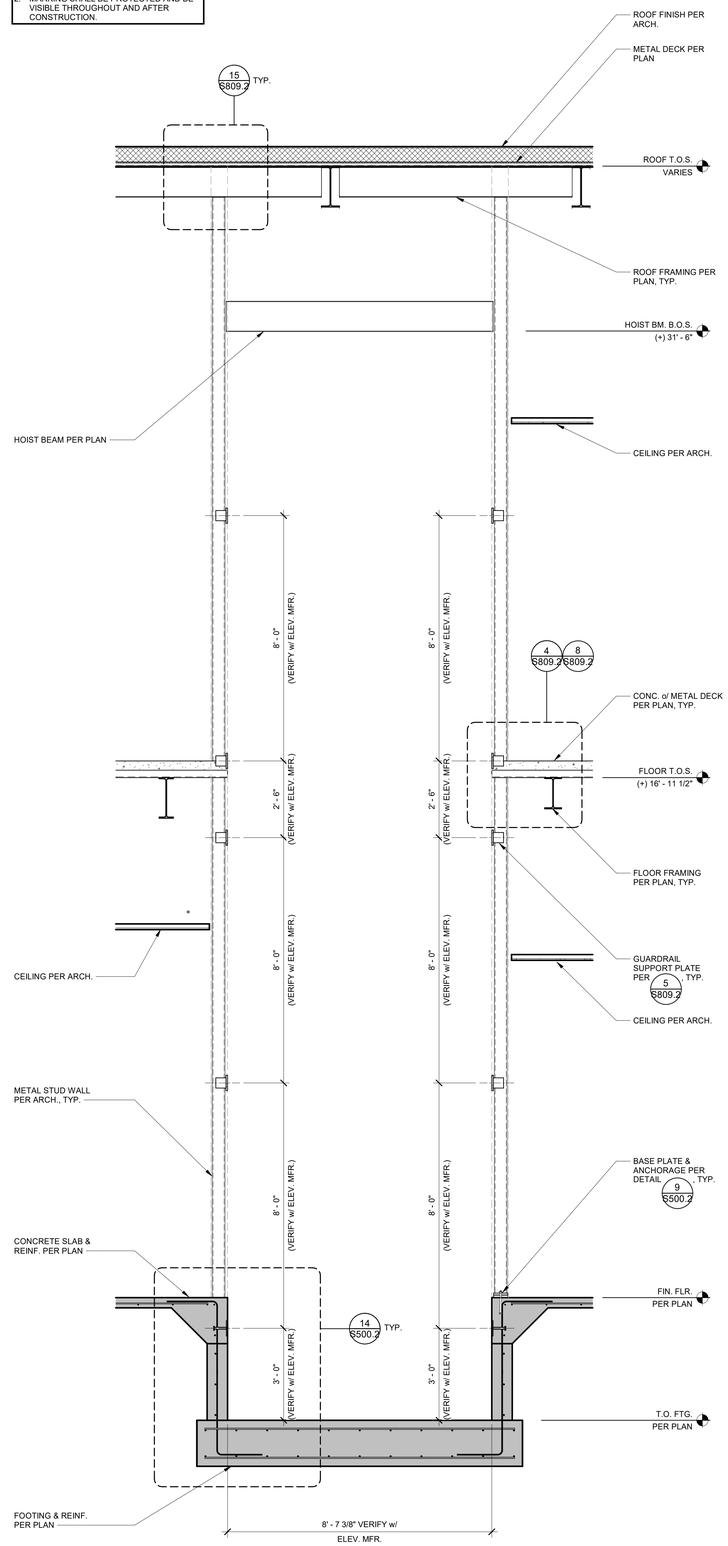

ELEVATOR 1 - NORTH EAST ELEVATOR LOOKING EAST 1/2" = 1'-0" 5

IDENTIFICATION STAMP
DIV. OF THE STATE ARCHITECT
APP: 02-122821 INC: 2
REVIEWED FOR
SS ☑ FLS ☑ ACS ☑
DATE: 11/20/2025

Teter, Inc. expressly reserves its common law copyright and other property rights in these plans. This document, the ideas and designs incorporated herein, as an instrument of professional service, is not to be used in whole or part, for any other project without prior written authorization.

MARK	DATE	DESCRIPTION
A.	11/13/2025	DSA BACKCHECK

REGISTERED PROFESSIONAL ENGINEER S. BAILEY No. 55659 STRUCTURAL STATE OF CALIFORNIA

TETER, INC.
ARCHITECTS ENGINEERS CONNECTED
FRESNO HEADQUARTERS
VISALIA | BAKERSFIELD | MODESTO | SAN LUIS OBISPO
TETER

VISALIA CAMPUS UNIVERSITY CENTER
COLLEGE OF THE SEQUOIAS
915 S. MOONEY BLVD
VISALIA, CALIFORNIA

DRAWING TITLE
ELEVATOR SECTIONS

PROJECT NO.
22-12498

DRAWING
S420.2

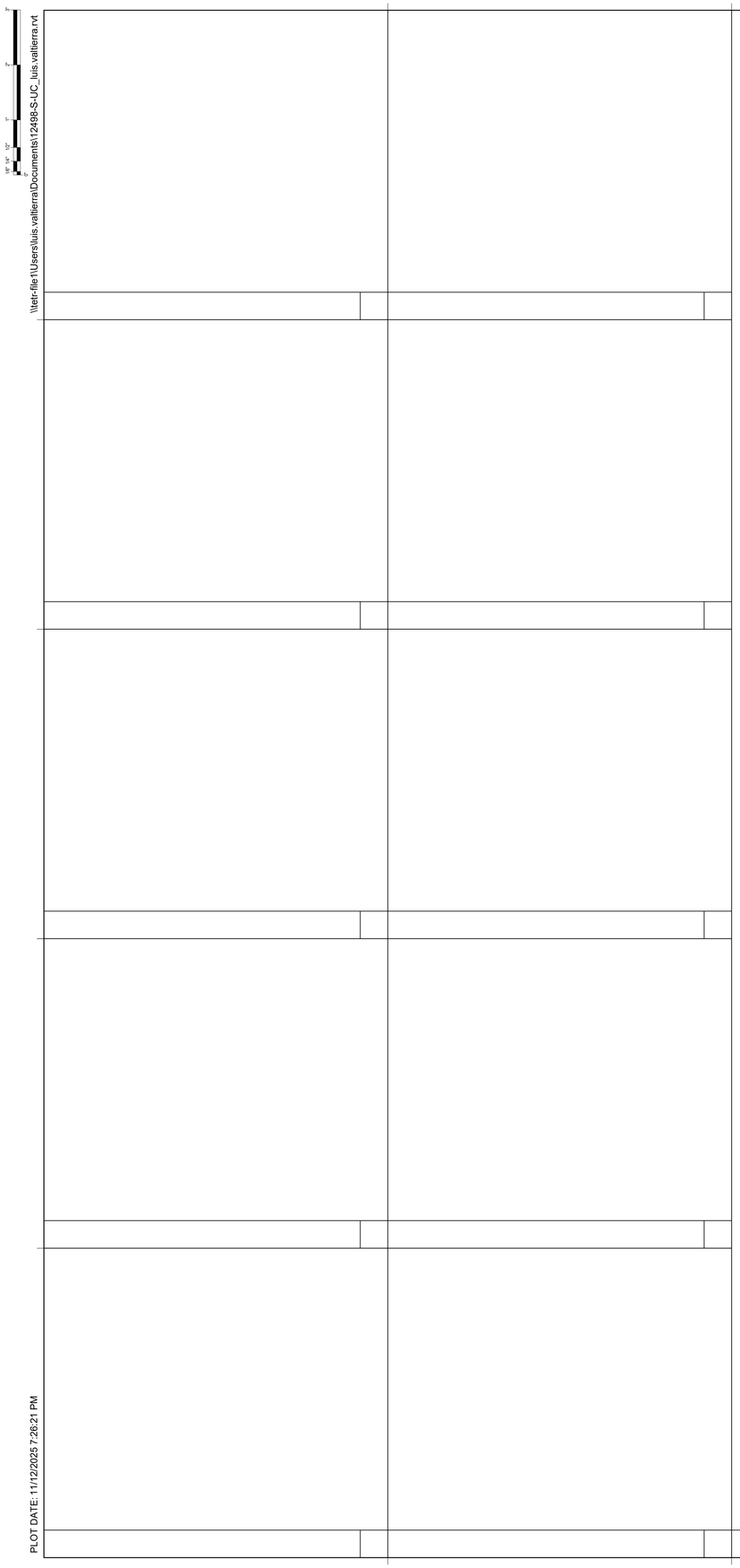

ELEVATOR 2 - SOUTH WEST ELEVATOR LOOKING EAST 1/2" = 1'-0" 15

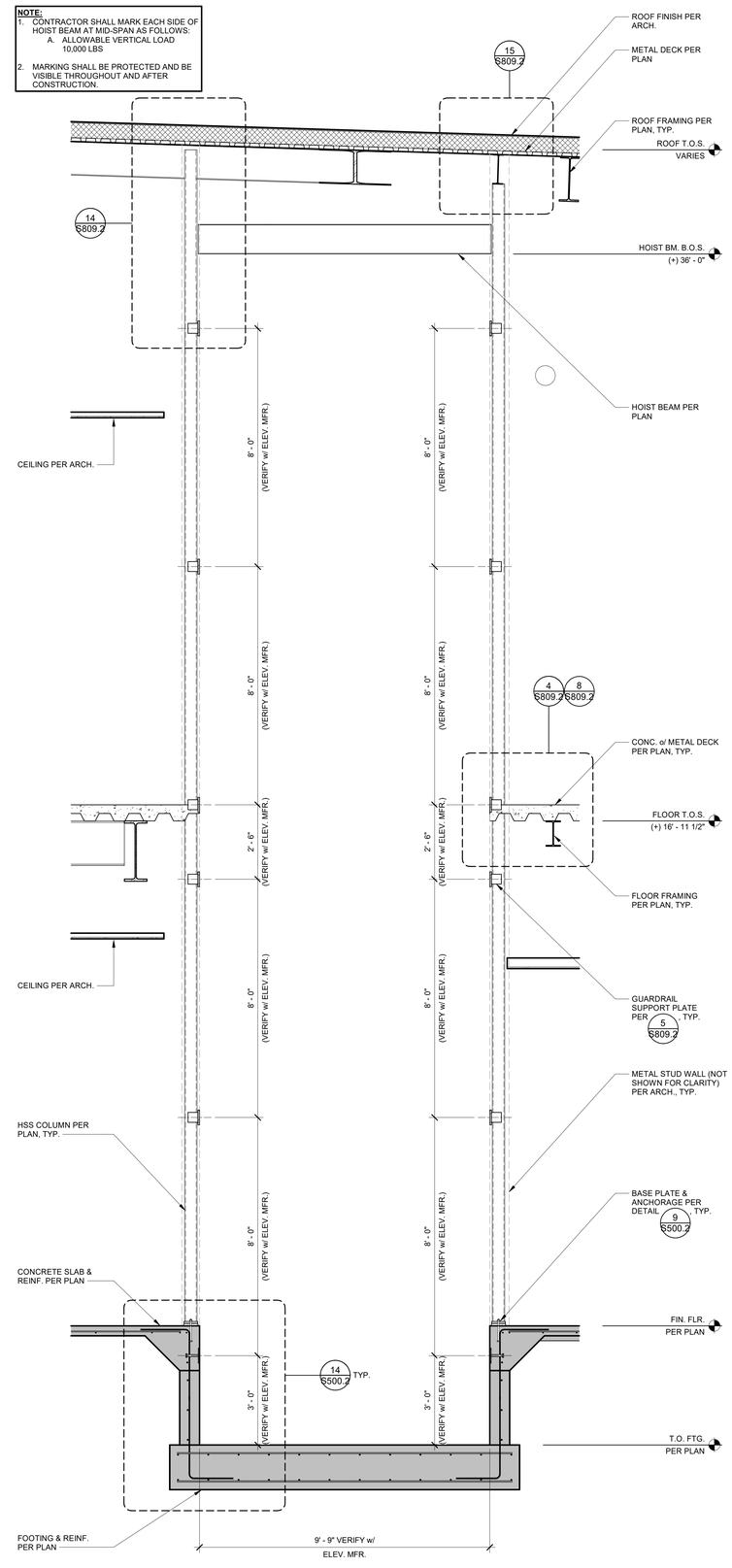

ELEVATOR 2 - SOUTH WEST ELEVATOR LOOKING EAST 1/2" = 1'-0" 5

IDENTIFICATION STAMP
DIV. OF THE STATE ARCHITECT
APP: 02-122821 INC: 2
REVIEWED FOR
SS ☑ FLS ☑ ACS ☑
DATE: 11/20/2025

Teter, Inc. expressly reserves its common law copyright and other property rights in these plans. This document, the ideas and designs incorporated herein, as an instrument of professional service, is not to be used in whole or in part, for any other project without prior written authorization.

MARK	DATE	DESCRIPTION
A	11/13/2025	DSA BACKCHECK

REGISTERED PROFESSIONAL ENGINEER ERIC S. BAILEY No. S56639 STRUCTURAL STATE OF CALIFORNIA

TETER, INC.
FRESNO HEADQUARTERS
VISALIA | BAKERSFIELD | MODESTO | SAN LUIS OBISPO
ARCHITECTS ENGINEERS CONNECTED

VISALIA CAMPUS UNIVERSITY CENTER
COLLEGE OF THE SEQUOIAS
915 S. MOONEY BLVD
VISALIA, CALIFORNIA

DRAWING TITLE
ELEVATOR SECTIONS

PROJECT NO.
22-12498

DRAWING
S421.2

PLOT DATE: 11/12/2025 7:26:21 PM

\\tetr-file1\Users\luis.valtierra\Documents\12498-S-UC_luis.valtierra.rvt

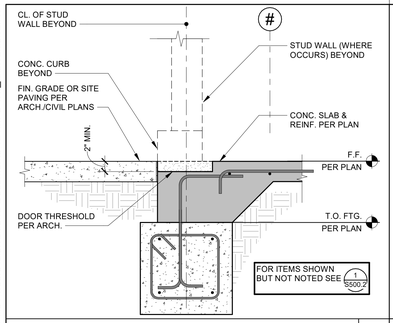

EXT. FTG @ STOREFRONT OPNG 1" = 1'-0" 26

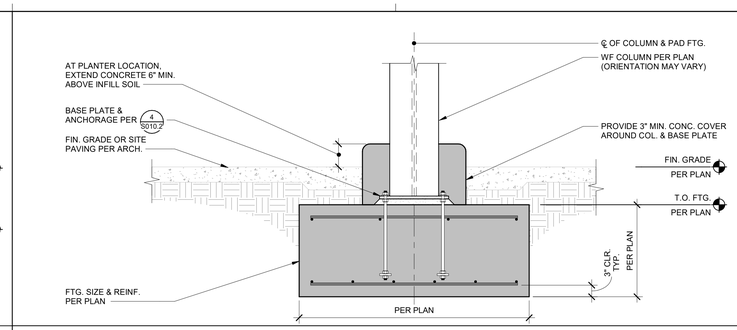

EXTERIOR COLUMN FOOTING 3/4" = 1'-0" 16

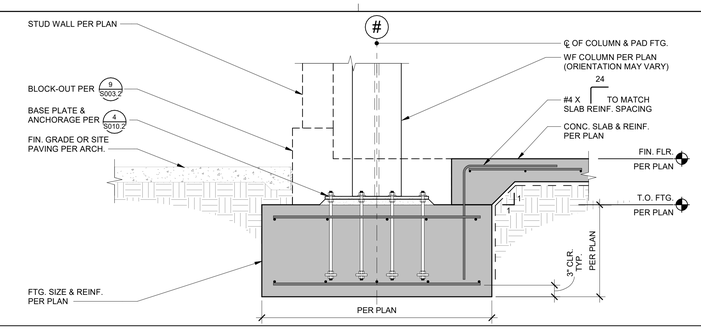

EXTERIOR COLUMN FOOTING 3/4" = 1'-0" 6

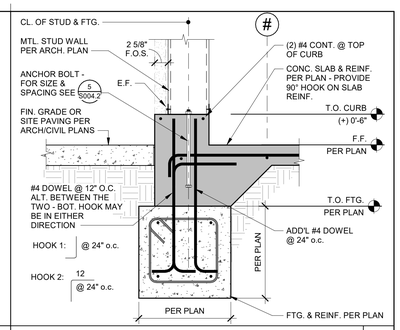

EXTERIOR WALL FOOTING 1" = 1'-0" 1

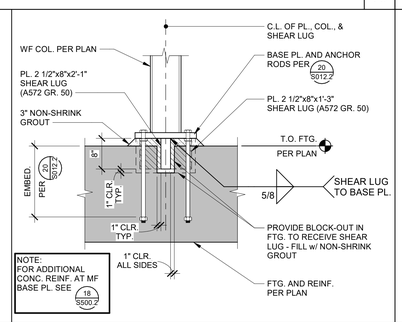

MF BASE PLATE SHEAR LUG 3/4" = 1'-0" 17

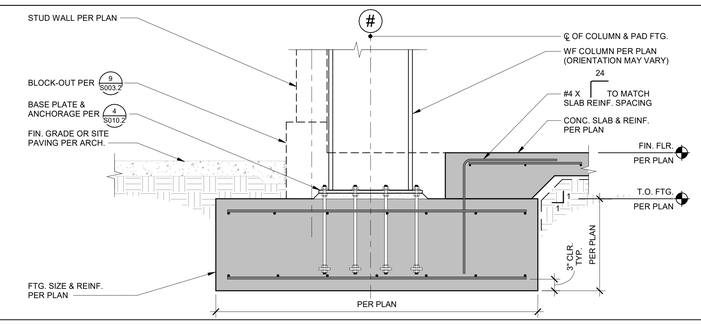

EXTERIOR COLUMN FOOTING 3/4" = 1'-0" 7

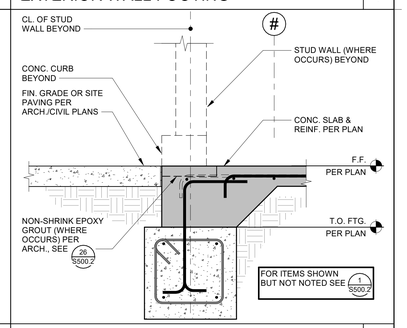

EXTERIOR FTG @ DOOR OPNG 1" = 1'-0" 2

MF BASE PLATE ANCHORAGE REINF. N.T.S. 18

INTERIOR COLUMN FTG 3/4" = 1'-0" 13

INT. HALF HT. WALL DETAIL 3/4" = 1'-0" 10

EXT. WALL FTG @ DEPRESSED SLAB 1" = 1'-0" 3

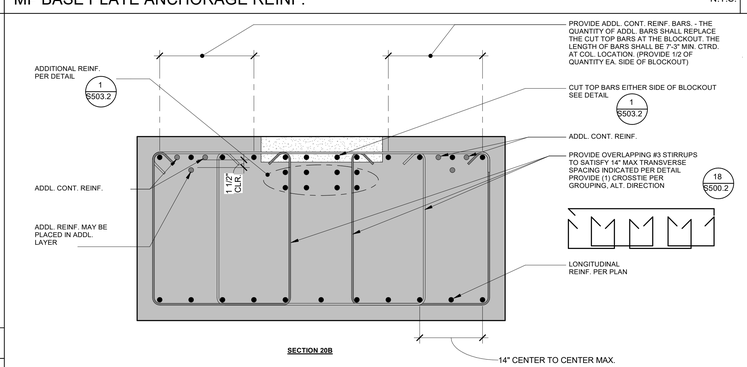

CF REINFORCING 1" = 1'-0" 20

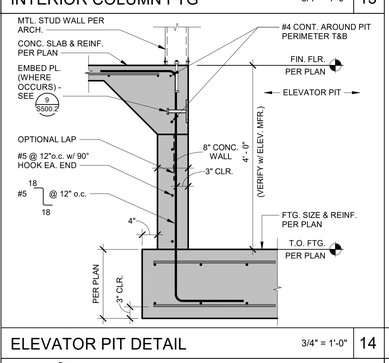

ELEVATOR PIT DETAIL 3/4" = 1'-0" 14

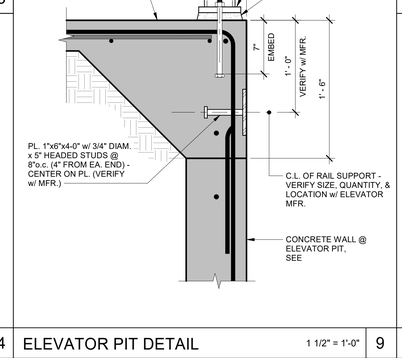

ELEVATOR PIT DETAIL 1 1/2" = 1'-0" 9

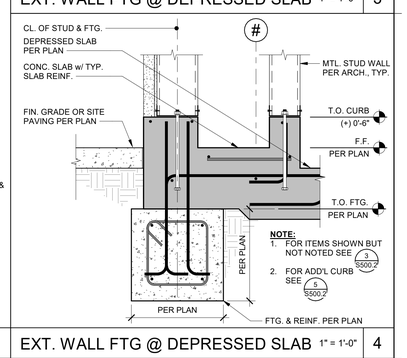

EXT. WALL FTG @ DEPRESSED SLAB 1" = 1'-0" 4

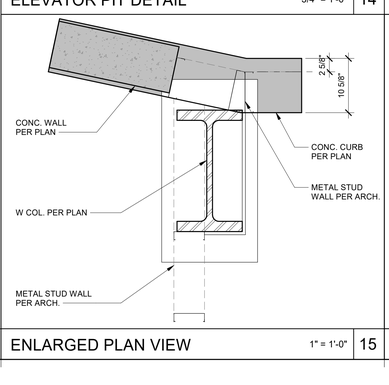

ENLARGED PLAN VIEW 1" = 1'-0" 15

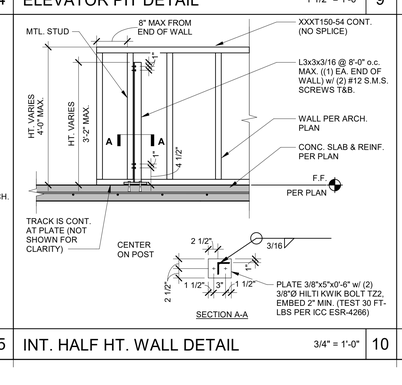

INT. HALF HT. WALL DETAIL 3/4" = 1'-0" 10

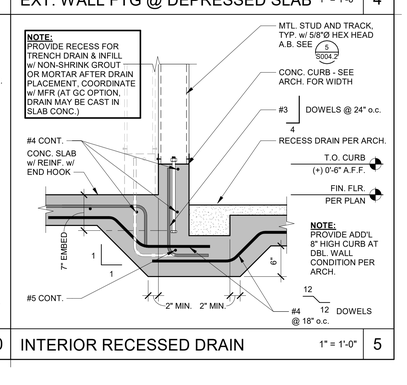

INTERIOR RECESSED DRAIN 1" = 1'-0" 5

PLOT DATE: 11/12/2025 7:26:23 PM

\\tetr-file1\Users\luis.valtierra\Documents\12498-S-UC_luis.valtierra.rvt

IDENTIFICATION STAMP
DIV. OF THE STATE ARCHITECT
APP: 02-122821 INC: 2
REVIEWED FOR
SS ☑ FLS ☑ ACS ☑
DATE: 11/20/2025

Teter, Inc. expressly reserves its common law copyright and other property rights in these plans. This document, the ideas and designs incorporated herein, as an instrument of professional service, is not to be used in whole or in part, for any other project without prior written authorization.

MARK	DATE	DESCRIPTION
A	11/13/2025	DSA BACKCHECK

REGISTERED PROFESSIONAL ENGINEER LUIS S. BALTIERRA No. 55629 STRUCTURAL STATE OF CALIFORNIA

TETER, INC.
FRESNO HEADQUARTERS
VISALIA | BAKERSFIELD | MODESTO | SAN LUIS OBISPO
ARCHITECTS ENGINEERS CONNECTED
TETER

VISALIA CAMPUS UNIVERSITY CENTER
COLLEGE OF THE SEQUOIAS
915 S. MOONEY BLVD
VISALIA, CALIFORNIA

DRAWING TITLE
FOUNDATION DETAILS

PROJECT NO.
22-12498

DRAWING
S500.2

\\tefs-file1\Users\luis.valtierra\Documents\12498-S-UC_luis.valtierra.rvt
1/8" 1/2" 1"

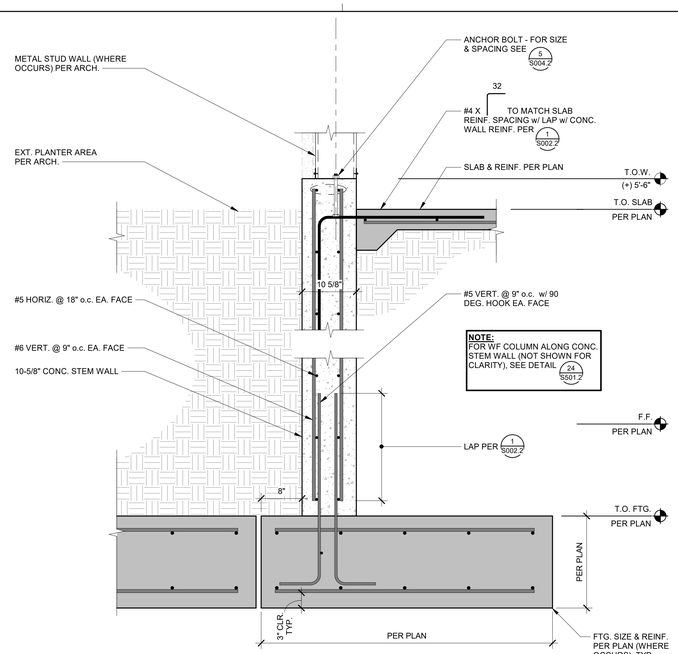

DETAIL 1" = 1'-0" | 22

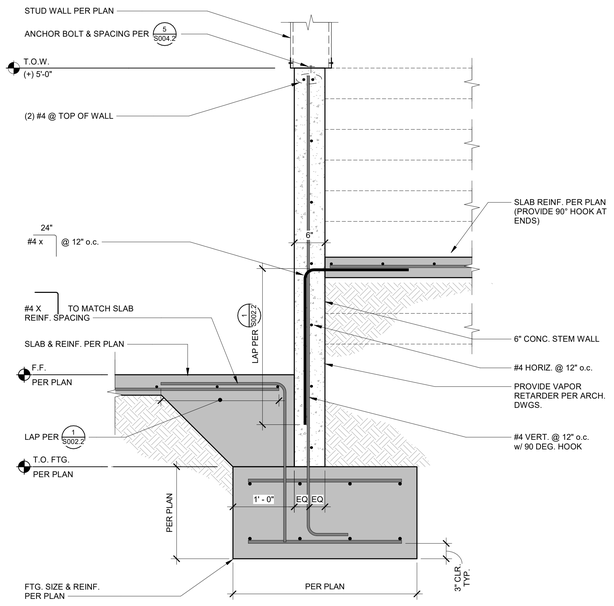

LECTURE SEATING FOUND. DETAIL 1" = 1'-0" | 12

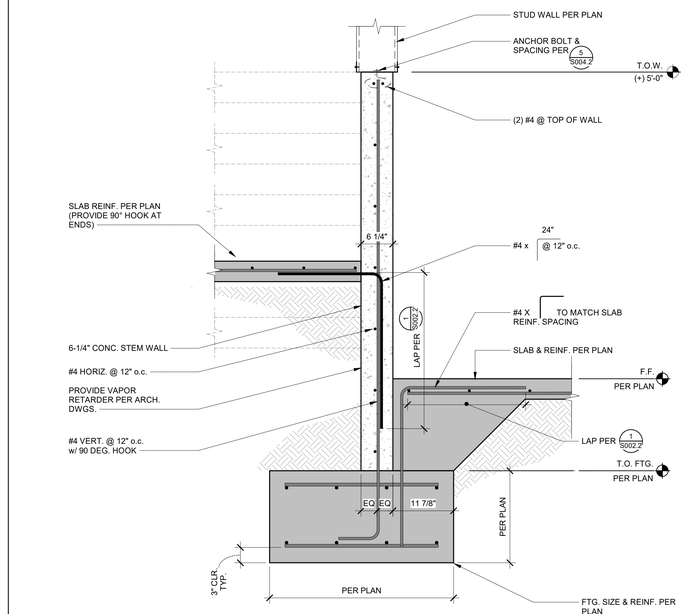

DETAIL 1" = 1'-0" | 2

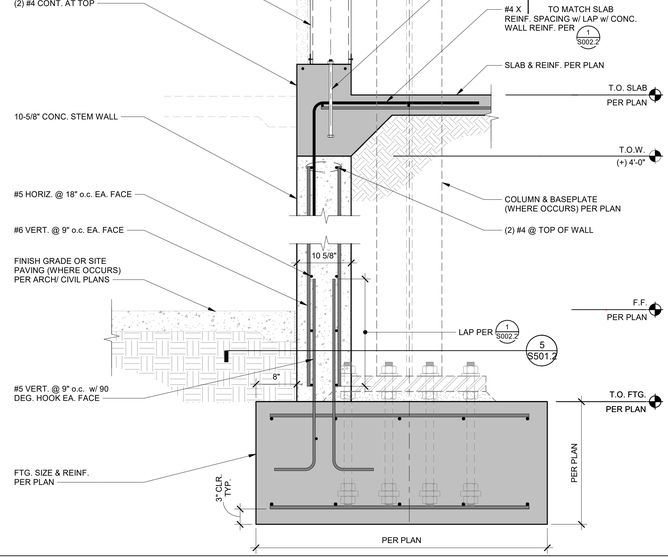

DETAIL 1" = 1'-0" | 24

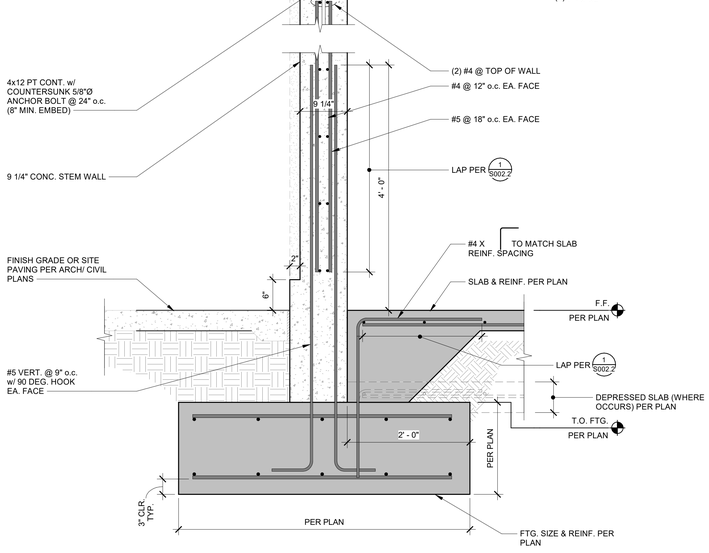

DETAIL 1" = 1'-0" | 14

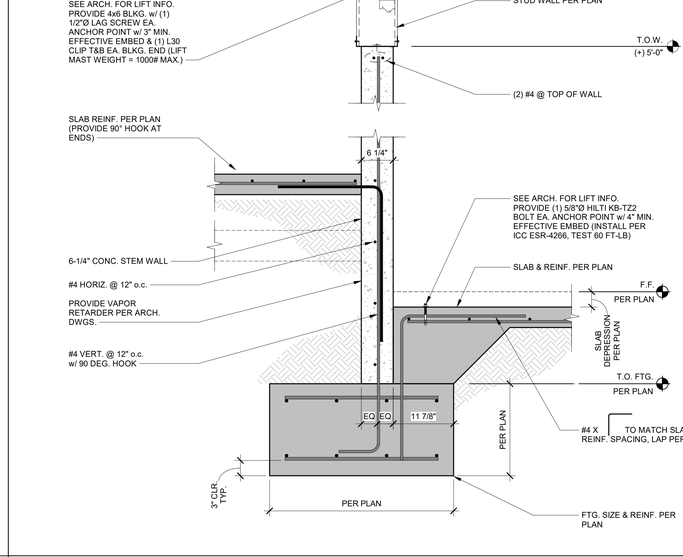

LIFT MAST SUPPORT 1" = 1'-0" | 4

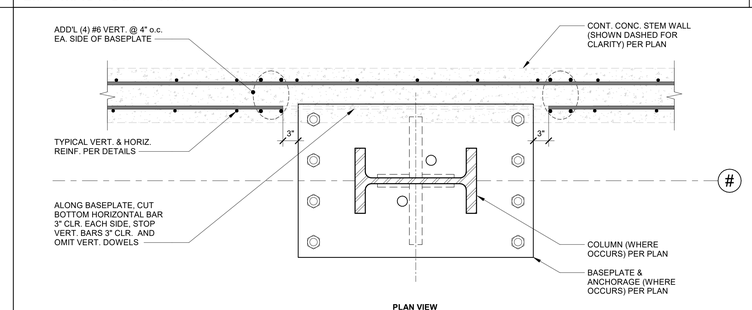

PLAN VIEW

CONCRETE STEM WALL AT BASE PLATE 1" = 1'-0" | 5

IDENTIFICATION STAMP
DIV. OF THE STATE ARCHITECT
APP: 02-122821 INC: 2
REVIEWED FOR
SS ☑ FLS ☑ ACS ☑
DATE: 11/20/2025

Teter, Inc. expressly reserves its common law copyright and other property rights in these plans. This document, the ideas and designs incorporated herein, as an instrument of professional service, is not to be used in whole or in part, for any other project without prior written authorization.

MARK	DATE	DESCRIPTION
A.	11/13/2025	DSA BACKCHECK

REGISTERED PROFESSIONAL ENGINEER ★ STRUCTURAL ★ STATE OF CALIFORNIA
E. S. BAILEY
No. 55609

TETER, INC.
ARCHITECTS ENGINEERS CONNECTED
FRESNO HEADQUARTERS
VISALIA | BAKERSFIELD | MODESTO | SAN LUIS OBISPO

TETER

VISALIA CAMPUS UNIVERSITY CENTER
COLLEGE OF THE SEQUOIAS
915 S. MOONEY BLVD
VISALIA, CALIFORNIA

DRAWING TITLE
FOUNDATION DETAILS

PROJECT NO.
22-12498

DRAWING
S501.2

PLOT DATE: 11/12/2025 7:26:27 PM

\\tetr-file1\Users\luis.valtierra\Documents\12498-S-UC_luis.valtierra.rvt

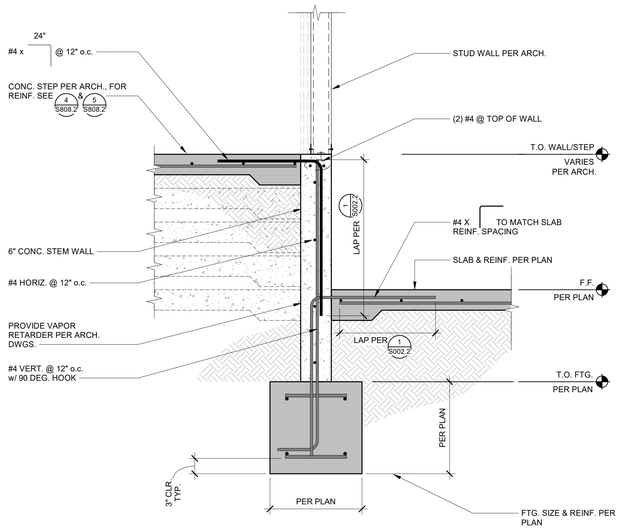

DETAIL 1" = 1'-0" 22

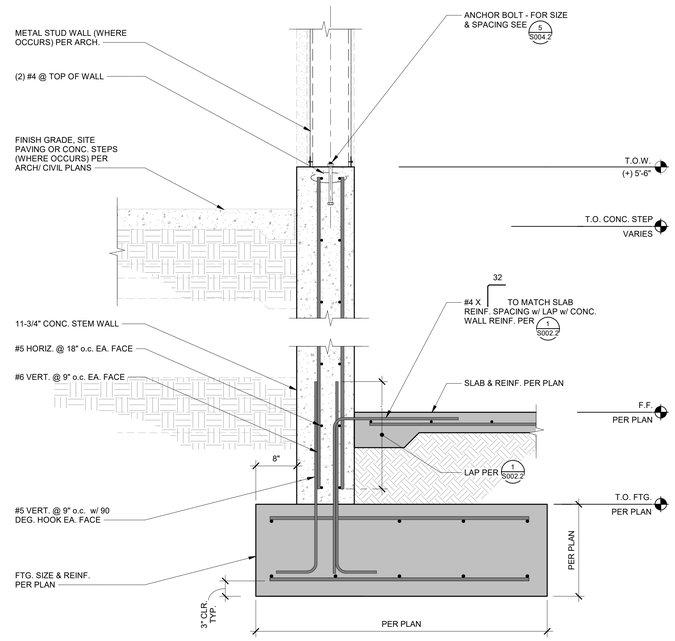

DETAIL 1" = 1'-0" 12

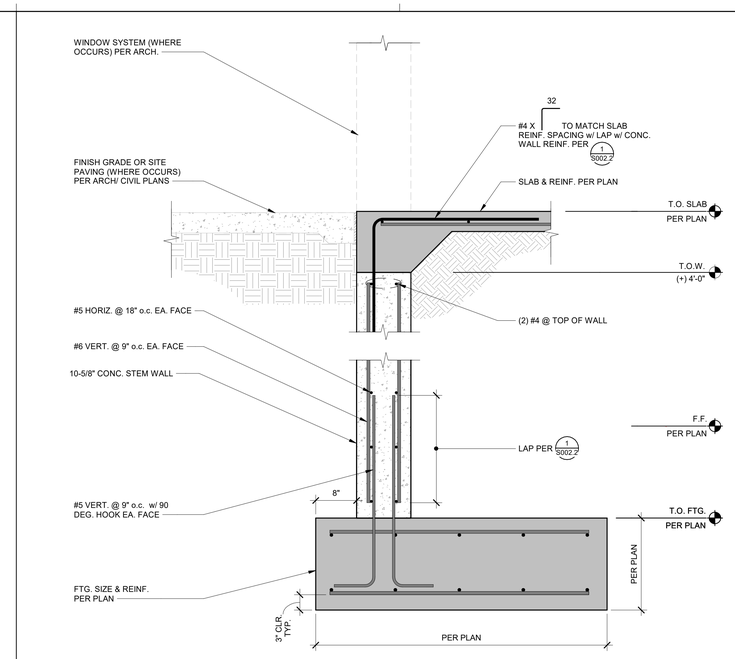

DETAIL 1" = 1'-0" 2

NOTE:
FOR SIM. ITEMS SHOWN BUT NOT NOTED, SEE DETAIL 2 S501.2

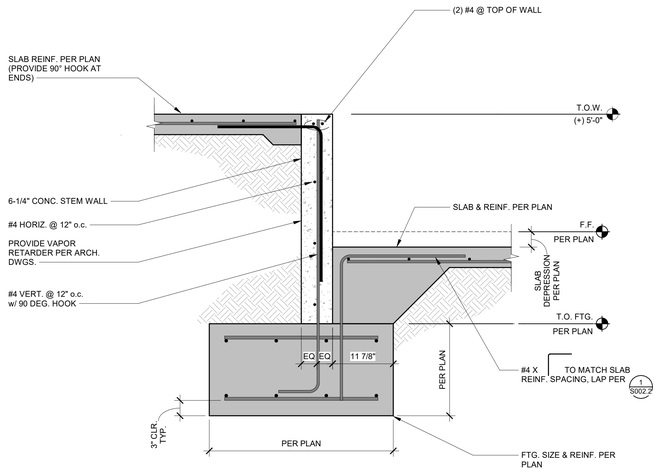

DETAIL 1" = 1'-0" 24

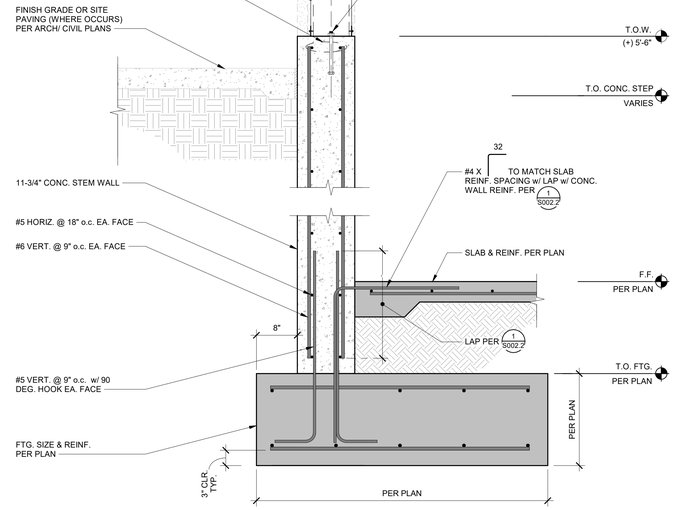

DETAIL 1" = 1'-0" 14

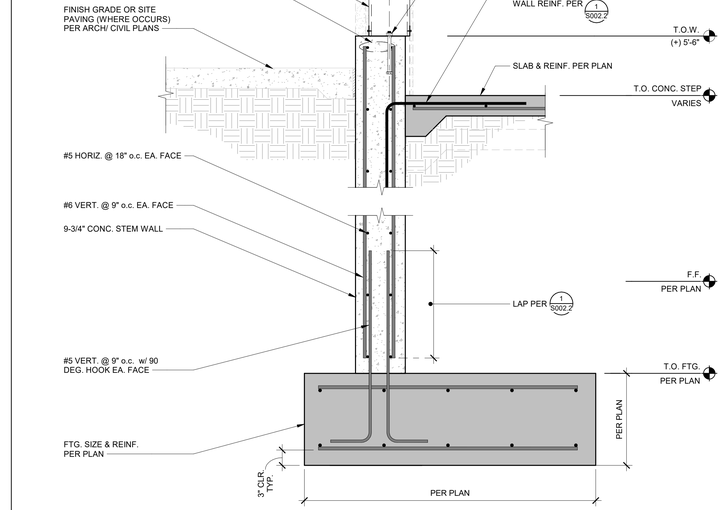

DETAIL 1" = 1'-0" 4

IDENTIFICATION STAMP
DIV. OF THE STATE ARCHITECT
APP: 02-122821 INC: 2
REVIEWED FOR
SS ☑ FLS ☑ ACS ☑
DATE: 11/20/2025

Teter, Inc. expressly reserves its common law copyright and other property rights in these plans. This document, the ideas and designs incorporated herein, as an instrument of professional service, is not to be used in whole or in part, for any other project without prior written authorization.

MARK	DATE	DESCRIPTION
A	11/13/2025	DSA BACKCHECK

REGISTERED PROFESSIONAL ENGINEER ★ STRUCTURAL ★ STATE OF CALIFORNIA
E. S. BAILEY
No. S5867
11/20/25

TETER, INC.
FRESNO HEADQUARTERS
VISALIA | BAKERSFIELD | MODESTO | SAN LUIS OBISPO
ARCHITECTS ENGINEERS CONNECTED
TETER

VISALIA CAMPUS UNIVERSITY CENTER
COLLEGE OF THE SEQUOIAS
915 S. MOONEY BLVD
VISALIA, CALIFORNIA

DRAWING TITLE
FOUNDATION DETAILS

PROJECT NO.
22-12498

DRAWING
S502.2

PLOT DATE: 11/12/2025 7:26:30 PM

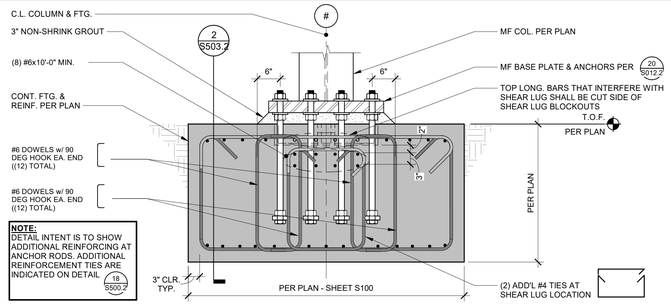

MOMENT FRAME TENSION REINFORCEMENT 3/4" = 1'-0" 1

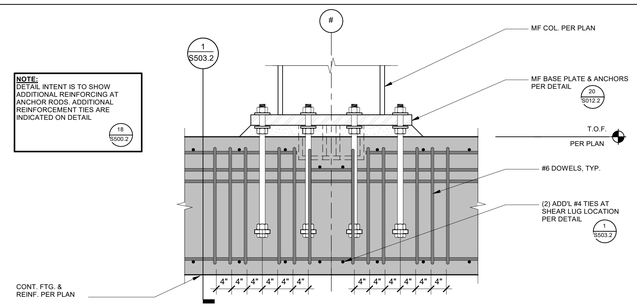

MOMENT FRAME TENSION REINFORCEMENT 3/4" = 1'-0" 2

IDENTIFICATION STAMP
DIV. OF THE STATE ARCHITECT
APP: 02-122821 INC: 2
REVIEWED FOR
SS ☑ FLS ☑ ACS ☑
DATE: 11/20/2025

Teter, Inc. expressly reserves its common law copyright and other property rights in these plans. This document, the ideas and designs incorporated herein, as an instrument of professional service, is not to be used in whole or in part, for any other project without prior written authorization.

MARK	DATE	DESCRIPTION
A	11/13/2025	DSA BACKCHECK

REGISTERED PROFESSIONAL ENGINEER ERIC S. BAILEY No. S5609 STRUCTURAL STATE OF CALIFORNIA

TETER, INC.
FRESNO HEADQUARTERS
VISALIA | BAKERSFIELD | MODESTO | SAN LUIS OBISPO
ARCHITECTS ENGINEERS CONNECTED

VISALIA CAMPUS UNIVERSITY CENTER
COLLEGE OF THE SEQUOIAS
915 S. MOONEY BLVD
VISALIA, CALIFORNIA

DRAWING TITLE
FOUNDATION DETAILS

PROJECT NO.
22-12498

DRAWING
S503.2

\\tetr-file1\Users\luis.valtierra\Documents\12498-S-UC_luis.valtierra.rvt

PLOT DATE: 11/12/2025 7:26:33 PM

\\tefr-file1\Users\luis.valiterra\Documents\12498-S-UC_luis.valiterra.rvt

PLOT DATE: 11/12/2025 7:26:39 PM

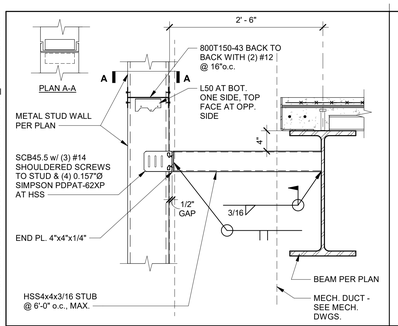

FULL HT. MTL. STUD WALL BRACE 1" = 1'-0" 26

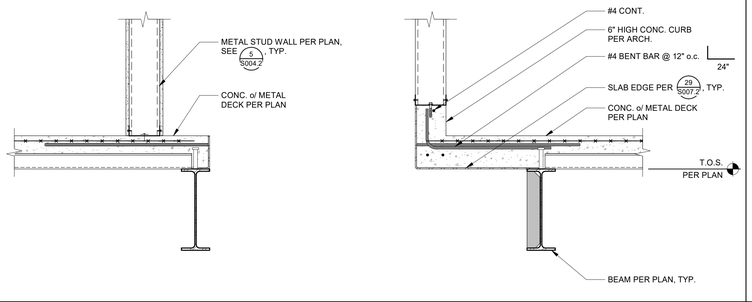

DETAIL 1" = 1'-0" 16

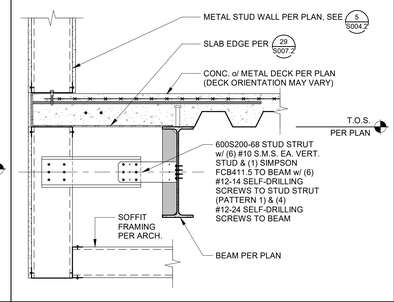

DETAIL 1" = 1'-0" 11

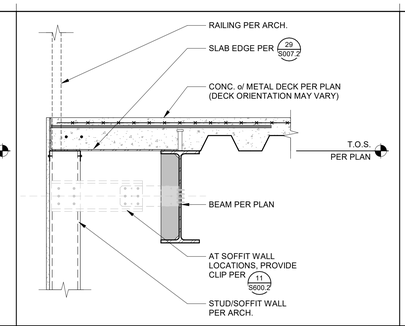

DETAIL 1" = 1'-0" 6

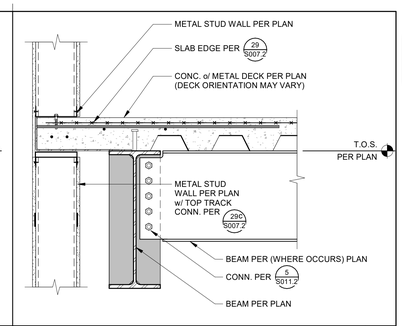

DETAIL 1" = 1'-0" 1

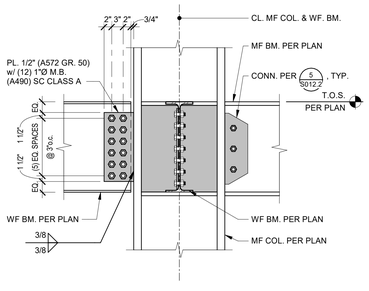

CONN. DETAIL 1" = 1'-0" 27

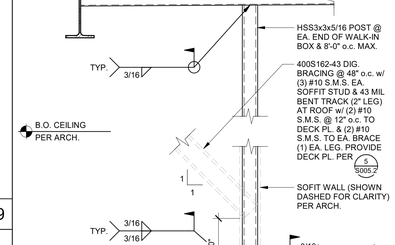

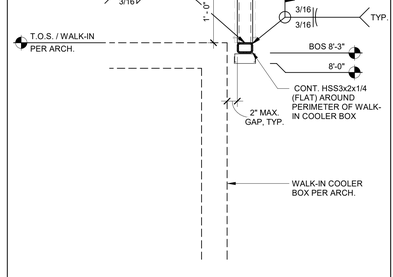

DETAIL 1" = 1'-0" 23

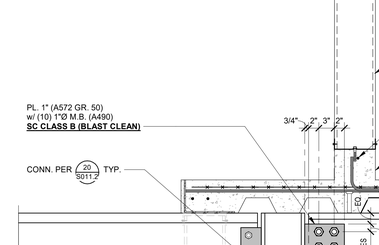

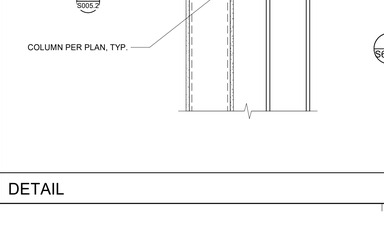

CONN. DETAIL 1" = 1'-0" 17

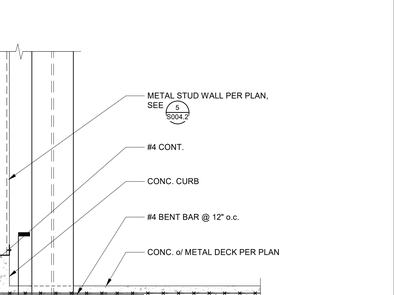

DETAIL 1" = 1'-0" 12

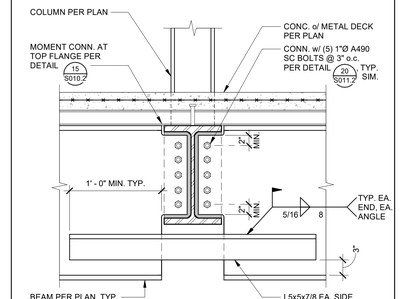

DETAIL 1" = 1'-0" 7

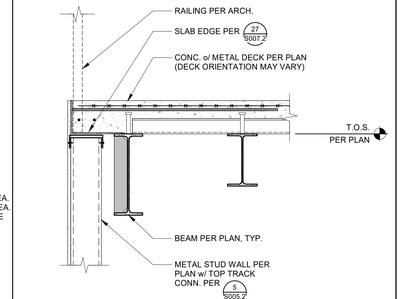

DETAIL 1" = 1'-0" 2



DETAIL 1" = 1'-0" 28

DETAIL 3/4" = 1'-0" 29

WALK-IN BOX BRACING/SUPPORT 1" = 1'-0" 25

STOREFRONT DETAIL 1" = 1'-0" 13

DETAIL 1" = 1'-0" 9

DETAIL 1" = 1'-0" 4

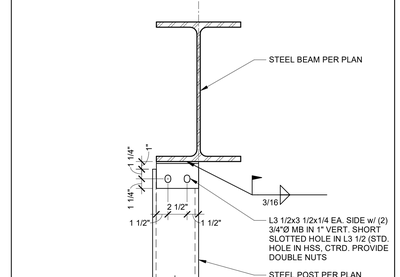

DETAIL 1 1/2" = 1'-0" 10

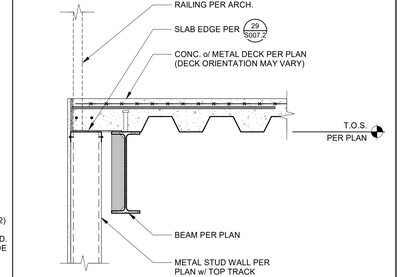

DETAIL 1" = 1'-0" 5

IDENTIFICATION STAMP
DIV. OF THE STATE ARCHITECT
APP: 02-122821 INC: 2
REVIEWED FOR
SS ☑ FLS ☑ ACS ☑
DATE: 11/20/2025

Teter, Inc. expressly reserves its common law copyright and other property rights in these plans. This document, the ideas and designs incorporated herein, as an instrument of professional service, is not to be used in whole or in part, for any other project without prior written authorization.

MARK	DATE	DESCRIPTION
A	11/13/2025	DSA BACKCHECK

REGISTERED PROFESSIONAL ENGINEER * VINOD K. BATRA * No. 55669 * STRUCTURAL * STATE OF CALIFORNIA

TETER, INC.
FRESNO HEADQUARTERS
VISALIA | BAKERSFIELD | MODESTO | SAN LUIS OBISPO
ARCHITECTS ENGINEERS CONNECTED

VISALIA CAMPUS UNIVERSITY CENTER
COLLEGE OF THE SEQUOIAS
915 S. MOONEY BLVD
VISALIA, CALIFORNIA

DRAWING TITLE
FLOOR FRAMING DETAILS

PROJECT NO.
22-12498

DRAWING
S600.2

\\tetr-file1\Users\luis.valtierra\Documents\12498-S-UC_luis.valtierra.rvt

IDENTIFICATION STAMP
DIV. OF THE STATE ARCHITECT
APP: 02-122821 INC: 2
REVIEWED FOR
SS ☑ FLS ☑ ACS ☑
DATE: 11/20/2025

Teter, Inc. expressly reserves its common law copyright and other property rights in these plans. This document, the ideas and designs incorporated herein, as an instrument of professional service, is not to be used in whole or in part, for any other project without prior written authorization.

MARK	DATE	DESCRIPTION
A.	11/13/2025	DSA BACKCHECK



TETER, INC.
FRESNO HEADQUARTERS
VISALIA | BAKERSFIELD | MODESTO | SAN LUIS OBISPO
ARCHITECTS ENGINEERS CONNECTED

VISALIA CAMPUS UNIVERSITY CENTER
COLLEGE OF THE SEQUOIAS
915 S. MOONEY BLVD
VISALIA, CALIFORNIA

DRAWING TITLE
FLOOR FRAMING DETAILS

PROJECT NO.
22-12498

DRAWING
S601.2

PLOT DATE: 11/12/2025 7:26:48 PM

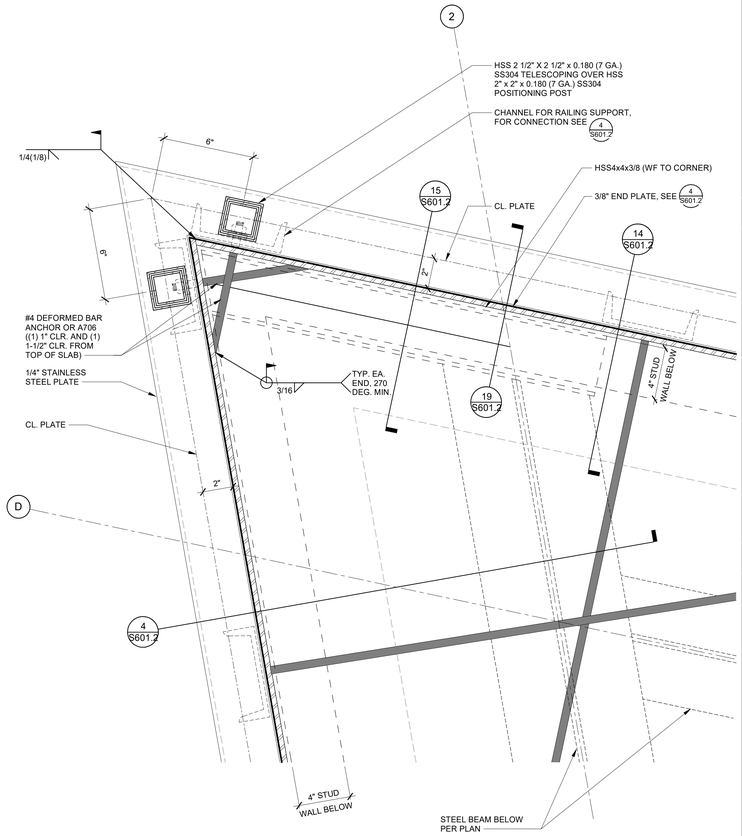

ENLARGED PLAN 3" = 1'-0" | 13

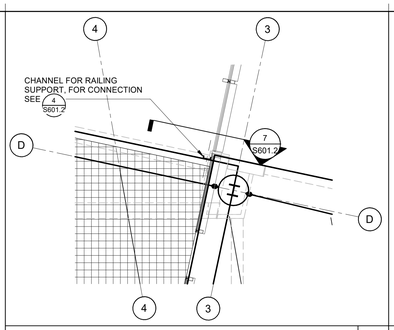

ENLARGED PLAN 1/4" = 1'-0" | 6

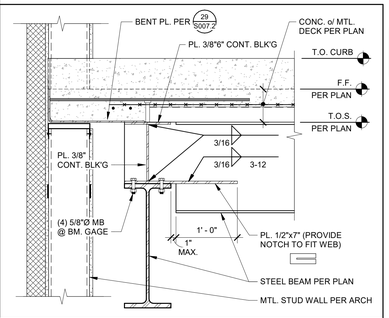

BALCONY 1" = 1'-0" | 1

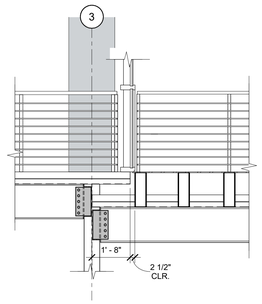

DETAIL 3/8" = 1'-0" | 7

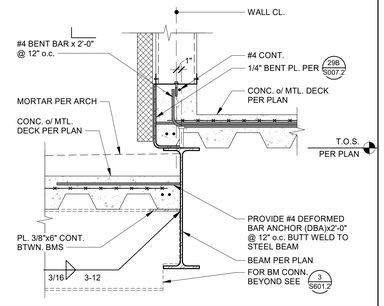

BALCONY 1" = 1'-0" | 2

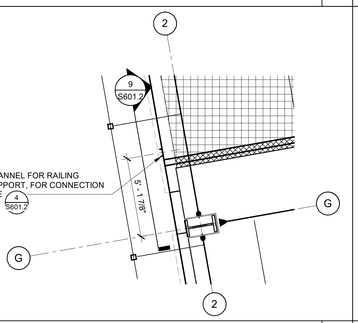

ENLARGED PLAN 1/4" = 1'-0" | 8

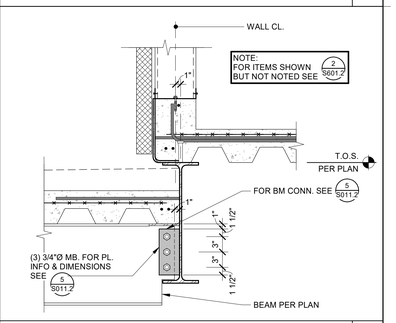

BALCONY 1" = 1'-0" | 3

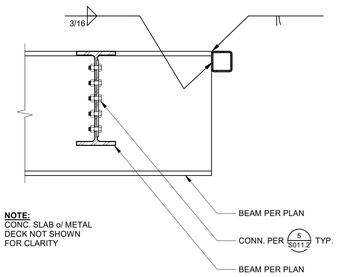

BALCONY 1" = 1'-0" | 19

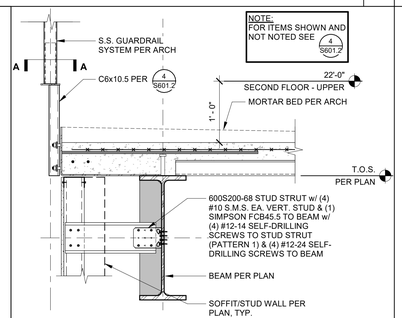

BALCONY 1" = 1'-0" | 14

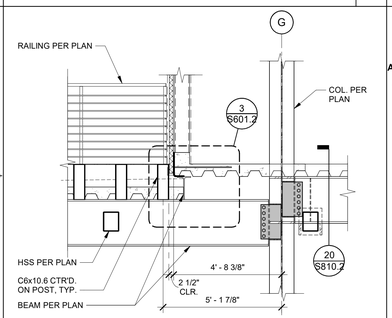

DETAIL 3/8" = 1'-0" | 9

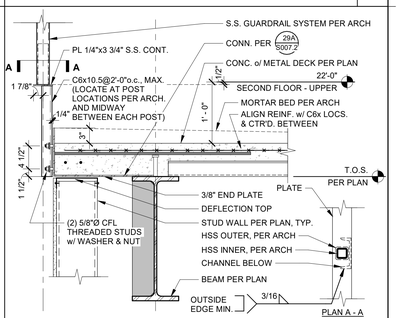

BALCONY 1" = 1'-0" | 4

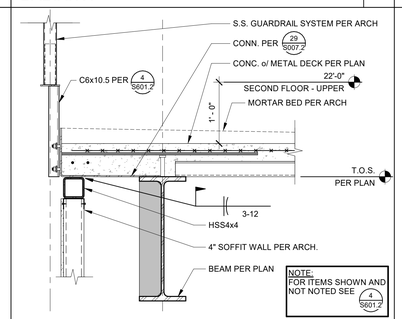

BALCONY 1" = 1'-0" | 15

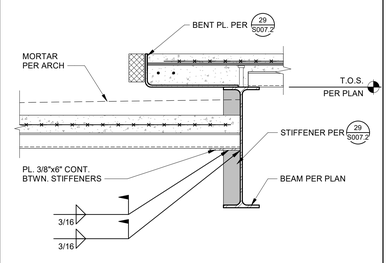

BALCONY 1" = 1'-0" | 5

\\tetr-file1\Users\luis.valtierra\Documents\12498-S-UC_luis.valtierra.rvt

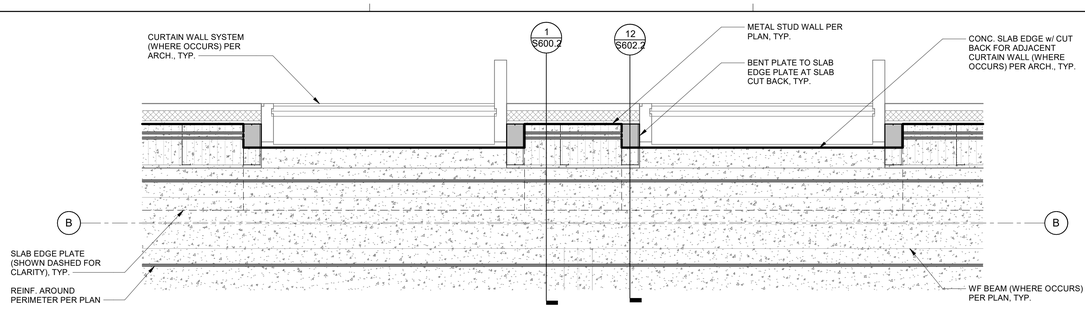

SLAB DIAPHRAGM REINFORCMENT AT CURTAIN WALLS OPENINGS 1" = 1'-0" 11

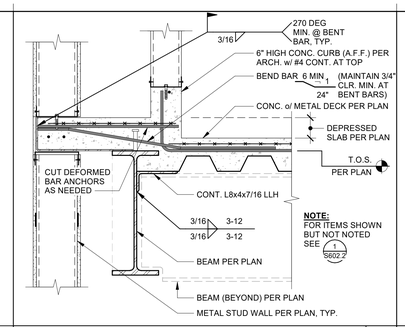

DEPRESSED SLAB 1" = 1'-0" 6

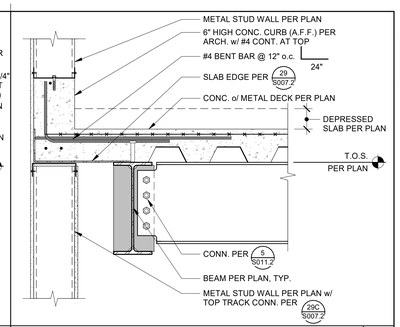

DEPRESSED SLAB 1" = 1'-0" 1

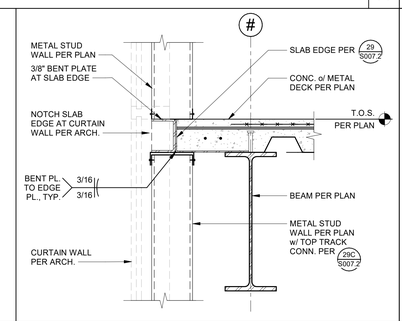

SLAB EDGE CUT BACK 1" = 1'-0" 12

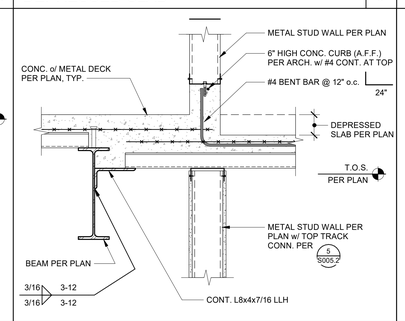

DEPRESSED SLAB 1" = 1'-0" 7

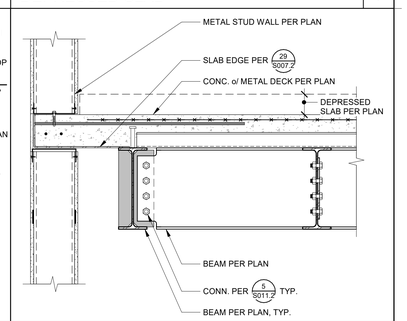

DEPRESSED SLAB 1" = 1'-0" 2

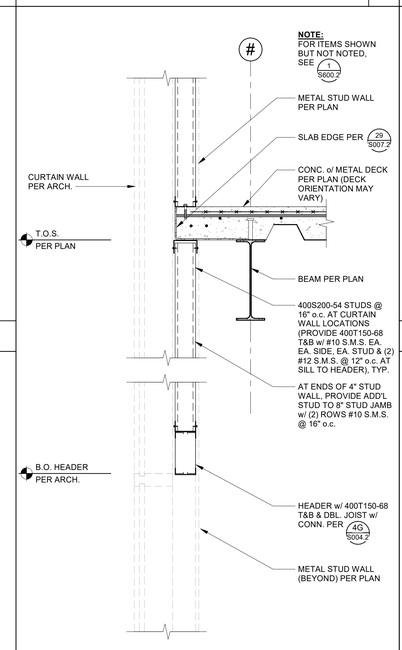

DETAIL 1" = 1'-0" 13

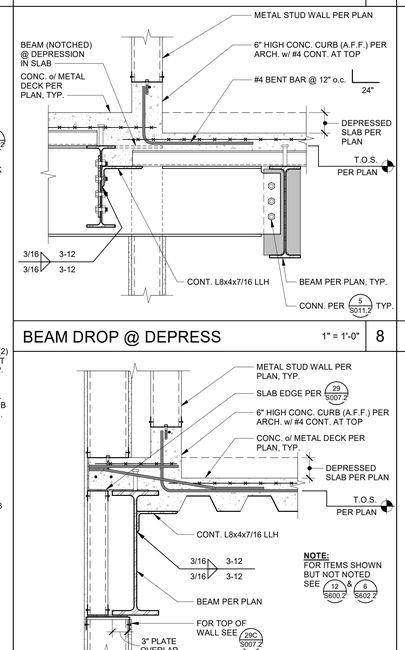

BEAM DROP @ DEPRESS 1" = 1'-0" 8

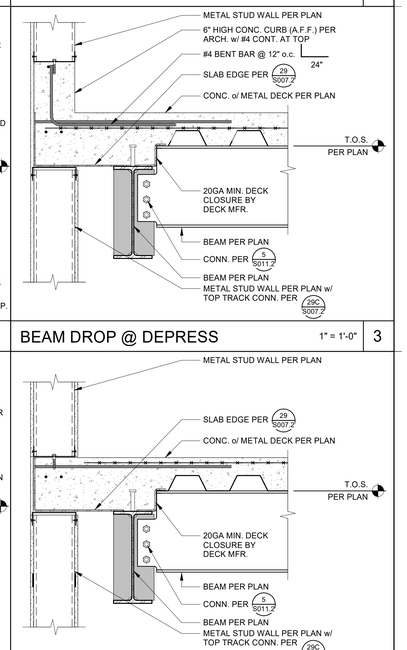

BEAM DROP @ DEPRESS 1" = 1'-0" 3

DEPRESSED SLAB 1" = 1'-0" 9

BEAM DROP @ DEPRESS 1" = 1'-0" 4

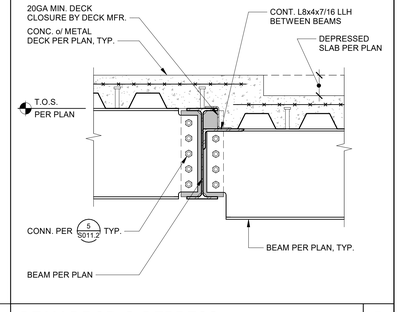

BEAM DROP @ DEPRESS 1" = 1'-0" 5

IDENTIFICATION STAMP
DIV. OF THE STATE ARCHITECT
APP: 02-122821 INC: 2
REVIEWED FOR
SS ☑ FLS ☑ ACS ☑
DATE: 11/20/2025

Teter, Inc. expressly reserves its common law copyright and other property rights in these plans. This document, the ideas and designs incorporated herein, as an instrument of professional service, is not to be used in whole or in part, for any other project without prior written authorization.

MARK	DATE	DESCRIPTION
A	11/13/2025	DSA BACKCHECK

REGISTERED PROFESSIONAL ENGINEER LUIS A. VALTIERRA No. 55626 STRUCTURAL STATE OF CALIFORNIA

TETER, INC.
FRESNO HEADQUARTERS
VISALIA I BAKERSFIELD I MODESTO I SAN LUIS OBISPO
ARCHITECTS ENGINEERS CONNECTED

VISALIA CAMPUS UNIVERSITY CENTER
COLLEGE OF THE SEQUOIAS
915 S. MOONEY BLVD
VISALIA, CALIFORNIA

DRAWING TITLE
FLOOR FRAMING DETAILS

PROJECT NO.
22-12498

DRAWING
S602.2

PLOT DATE: 11/12/2025 7:26:55 PM

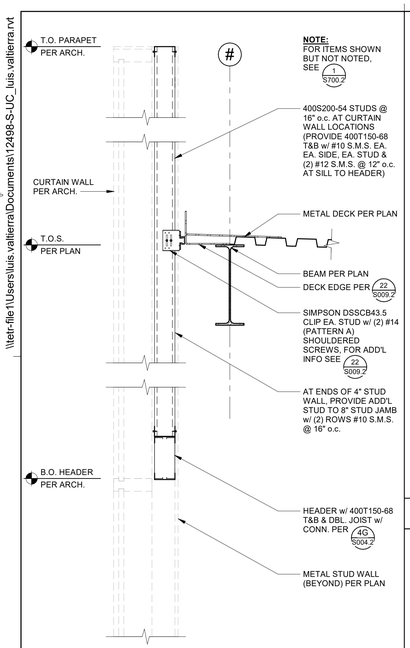

DETAIL 1" = 1'-0" 27

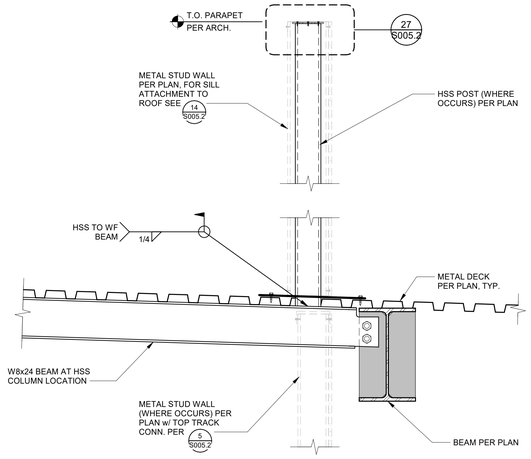

DETAIL 1" = 1'-0" 16

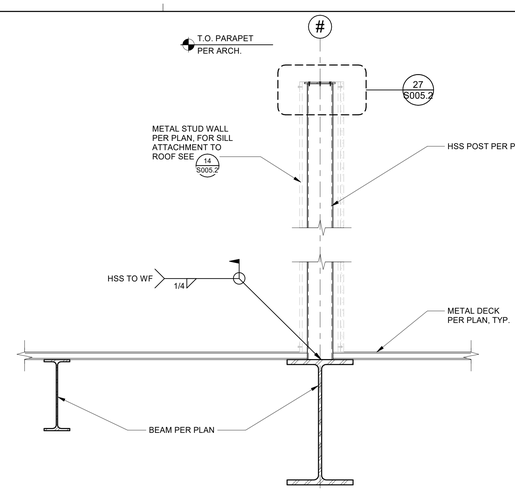

DETAIL 1" = 1'-0" 11

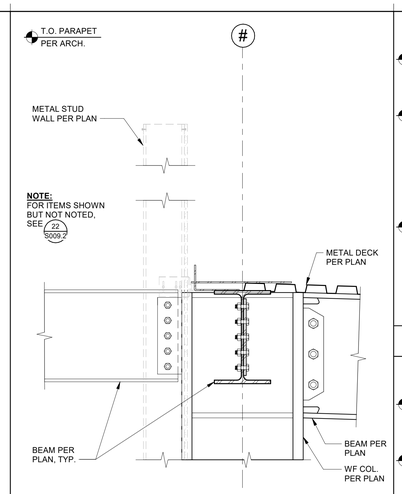

DETAIL 1" = 1'-0" 6

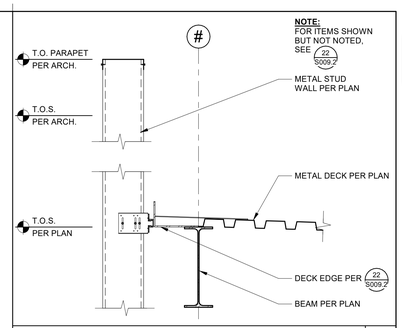

DETAIL 1" = 1'-0" 1

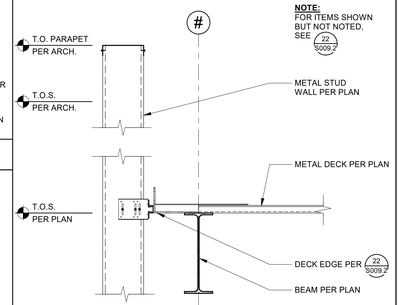

DETAIL 1" = 1'-0" 2

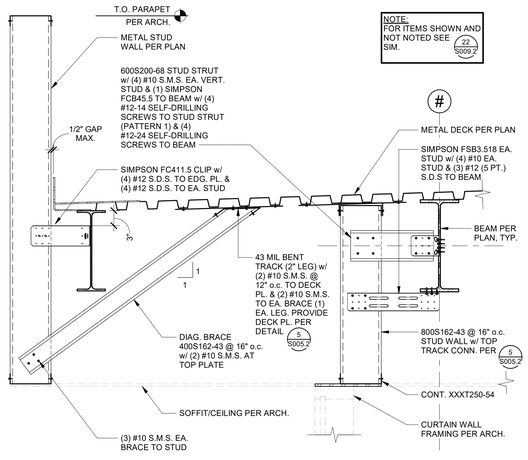

DETAIL 1" = 1'-0" 18

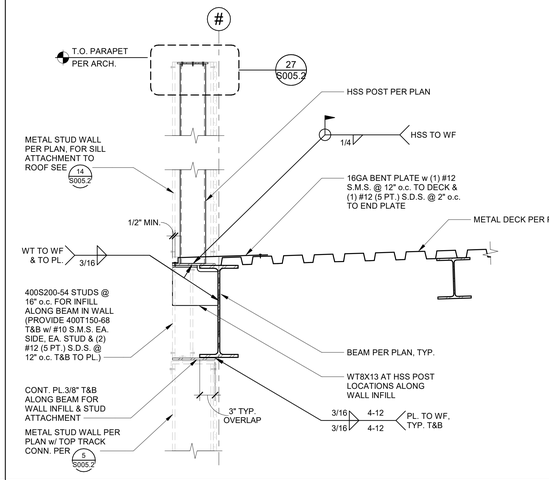

DETAIL 1" = 1'-0" 13

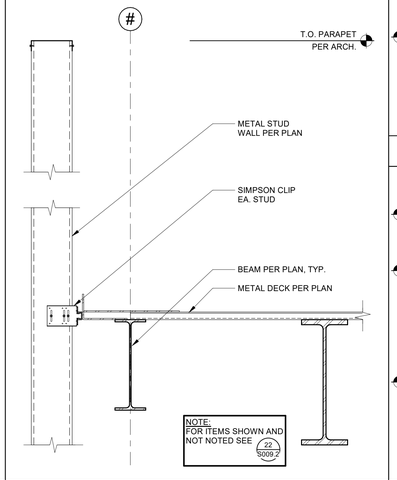

DETAIL 1" = 1'-0" 8

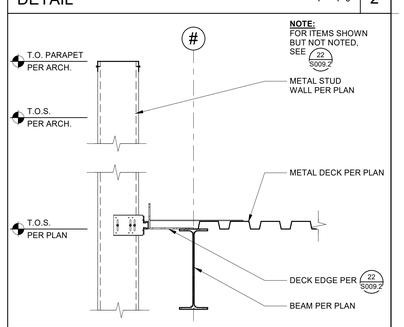

DETAIL 1" = 1'-0" 3

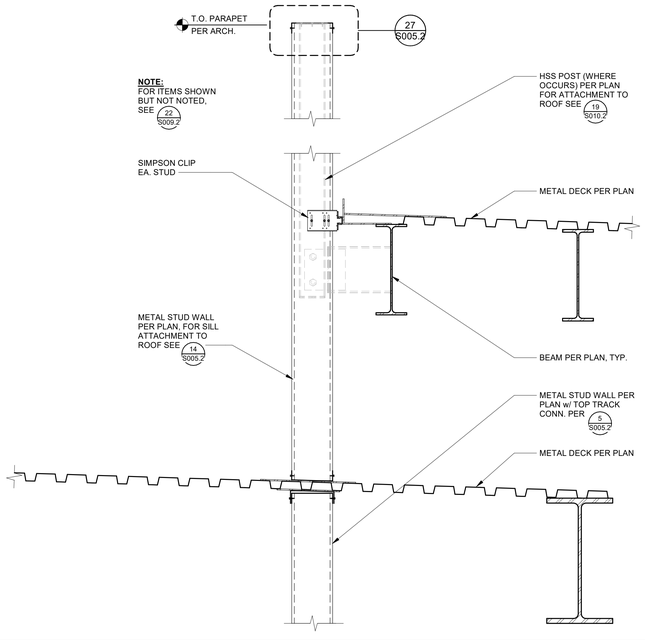

DETAIL 1" = 1'-0" 20

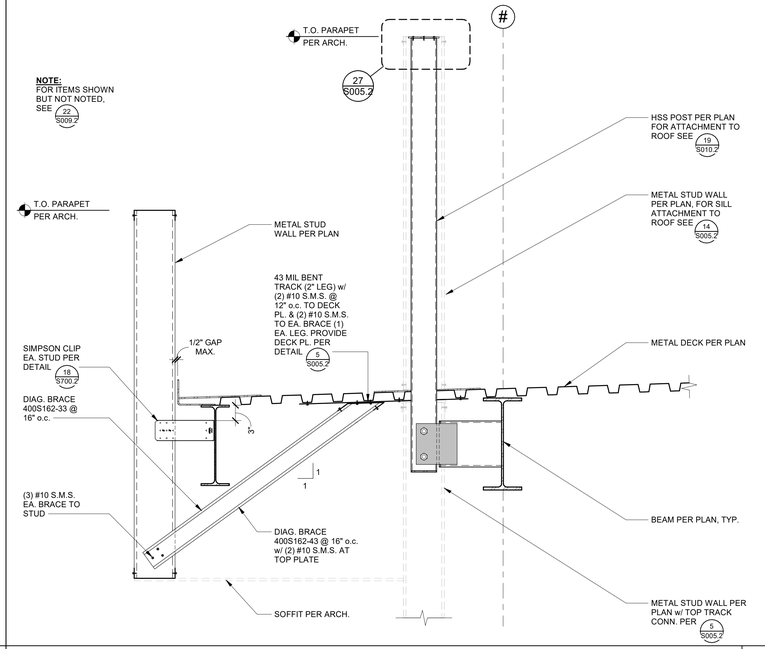

DETAIL 1" = 1'-0" 10

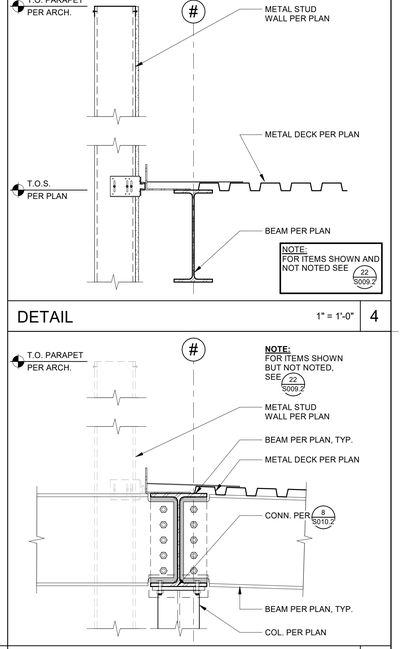

DETAIL 1" = 1'-0" 4

DETAIL 1" = 1'-0" 5

IDENTIFICATION STAMP
DIV. OF THE STATE ARCHITECT
APP: 02-122821 INC: 2
REVIEWED FOR
SS ☑ FLS ☑ ACS ☑
DATE: 11/20/2025

Teter, Inc. expressly reserves its common law copyright and other property rights in these plans. This document, the ideas and designs incorporated herein, as an instrument of professional service, is not to be used in whole or in part, for any other project without prior written authorization.

MARK	DATE	DESCRIPTION
A	11/13/2025	DSA BACKCHECK

REGISTERED PROFESSIONAL ENGINEER STEVEN S. BAILEY No. 55609 STRUCTURAL STATE OF CALIFORNIA

TETER, INC.
ARCHITECTS ENGINEERS CONNECTED
FRESNO HEADQUARTERS
VISALIA | BAKERSFIELD | MODESTO | SAN LUIS OBISPO

VISALIA CAMPUS UNIVERSITY CENTER
COLLEGE OF THE SEQUOIAS
915 S. MOONEY BLVD
VISALIA, CALIFORNIA

DRAWING TITLE
ROOF FRAMING DETAILS

PROJECT NO.
22-12498

DRAWING
S700.2

PLOT DATE: 11/12/2025 7:27:01 PM

\\tet-file1\Users\lus.valiterra\Documents\12498-S-UC_lus.valiterra.rvt

\\tetr-file1\Users\luis.valtierra\Documents\12498-S-UC_luis.valtierra.rvt

IDENTIFICATION STAMP
DIV. OF THE STATE ARCHITECT
APP: 02-122821 INC: 2
REVIEWED FOR
SS ☑ FLS ☑ ACS ☑
DATE: 11/20/2025

Teter, Inc. expressly reserves its common law copyright and other property rights in these plans. This document, the ideas and designs incorporated herein, as an instrument of professional service, is not to be used in whole or in part, for any other project without prior written authorization.

MARK	DATE	DESCRIPTION
A	11/13/2025	DSA BACKCHECK



TETER, INC.
ARCHITECTS ENGINEERS CONNECTED
FRESNO HEADQUARTERS
VISALIA | BAKERSFIELD | MODESTO | SAN LUIS OBISPO

TETER

VISALIA CAMPUS UNIVERSITY CENTER
COLLEGE OF THE SEQUOIAS
915 S. MOONEY BLVD
VISALIA, CALIFORNIA

DRAWING TITLE
ROOF FRAMING DETAILS

PROJECT NO.
22-12498

DRAWING
S701.2

PLOT DATE: 11/12/2025 7:27:06 PM

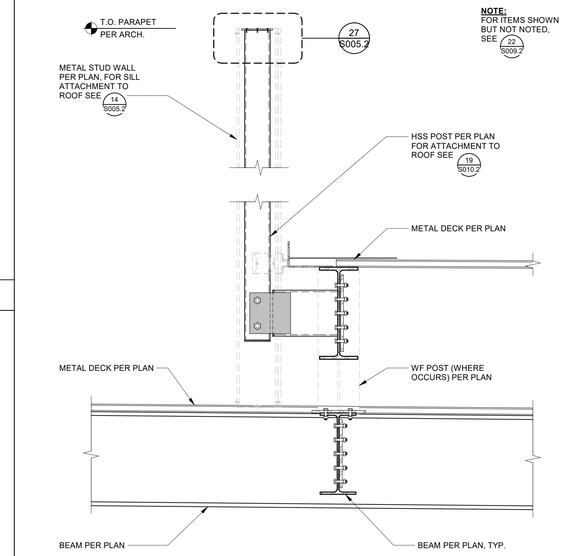

DETAIL 1" = 1'-0" 17

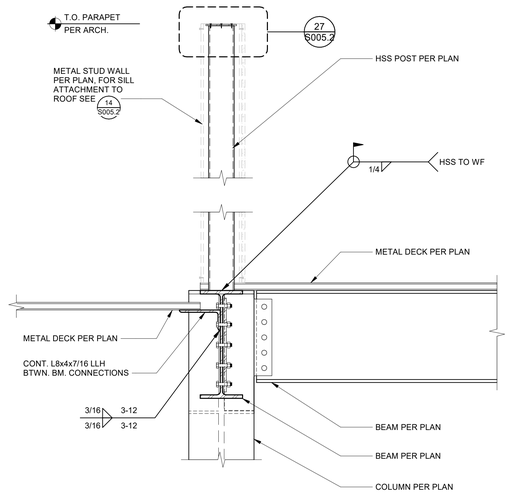

DETAIL 1" = 1'-0" 7

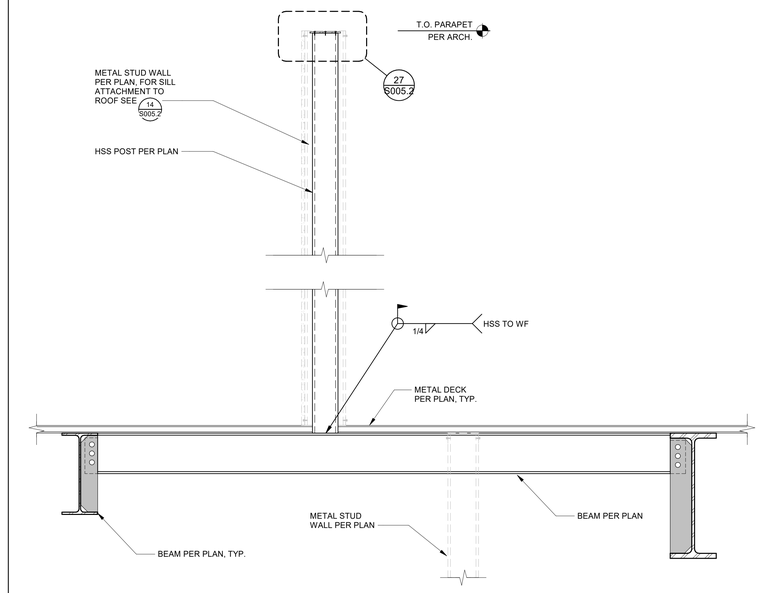

DETAIL 1" = 1'-0" 2

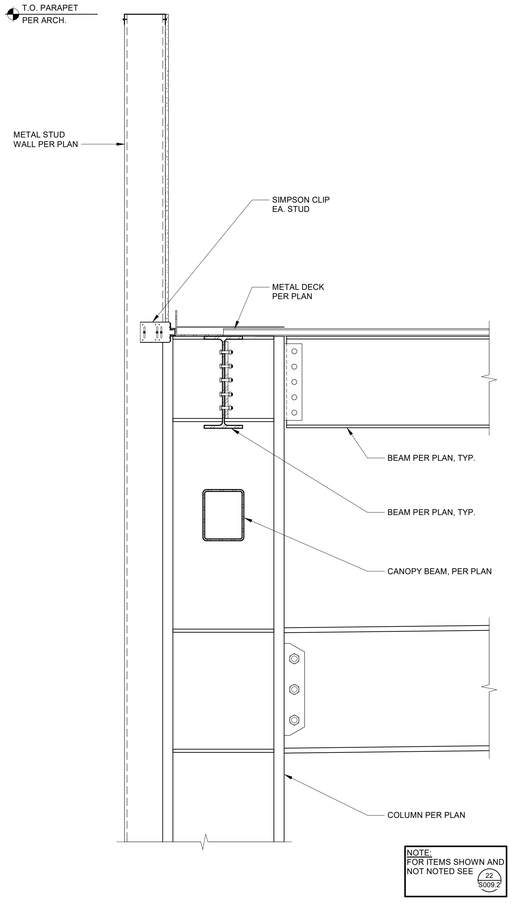

DETAIL 1" = 1'-0" 30

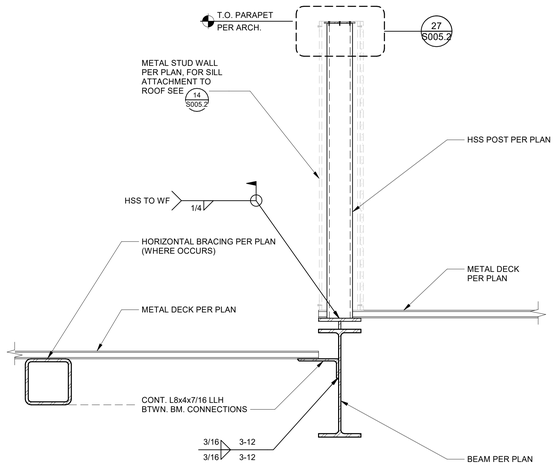

DETAIL 1" = 1'-0" 18

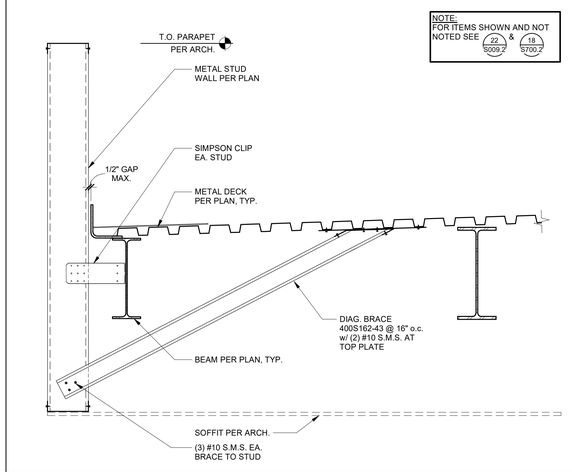

NOTE: FOR ITEMS SHOWN AND NOT NOTED SEE 22 S009.2 & 18 S700.2

DETAIL 1" = 1'-0" 8

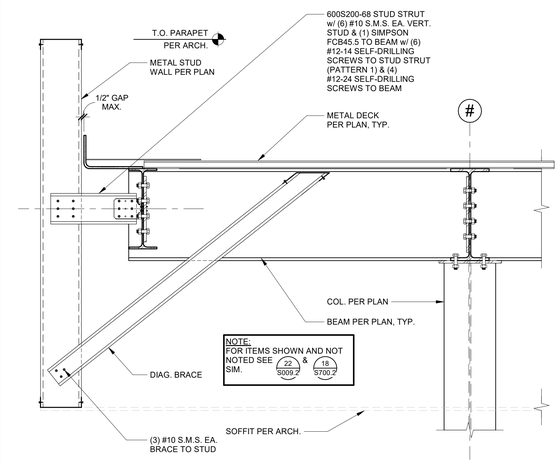

NOTE: FOR ITEMS SHOWN AND NOT NOTED SEE 22 S009.2 & 18 S700.2 SIM.

DETAIL 1" = 1'-0" 3

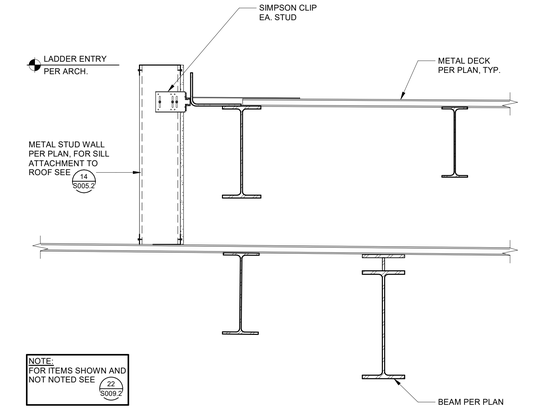

DETAIL 1" = 1'-0" 20

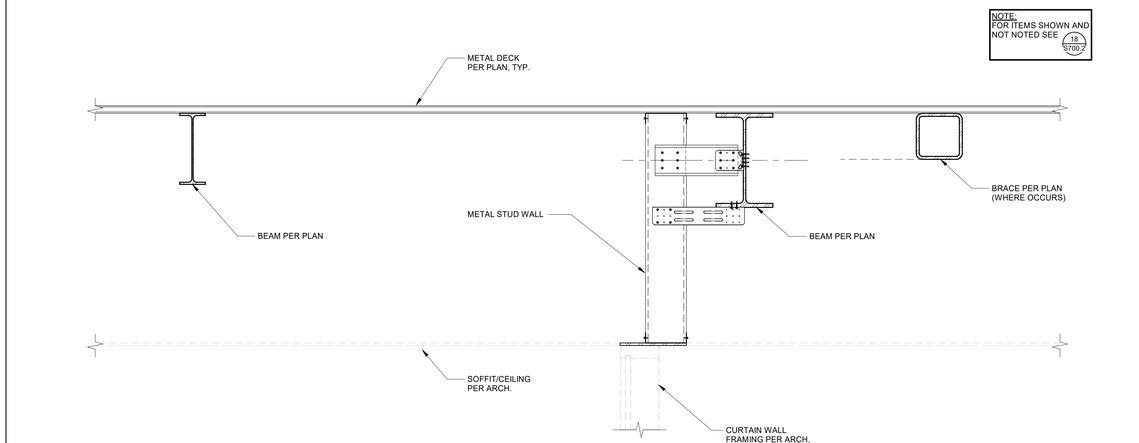

DETAIL 1" = 1'-0" 5

\\tetr-file1\Users\luis.valtierra\Documents\12498-S-UC_luis.valtierra.rvt

IDENTIFICATION STAMP
DIV. OF THE STATE ARCHITECT
APP: 02-122821 INC: 2
REVIEWED FOR
SS ☑ FLS ☑ ACS ☑
DATE: 11/20/2025

Teter, Inc. expressly reserves its common law copyright and other property rights in these plans. This document, the ideas and designs incorporated herein, as an instrument of professional service, is not to be used in whole or part, for any other project, without prior written authorization.

MARK	DATE	DESCRIPTION
A	11/13/2025	DSA BACKCHECK

NOTE:
FOR TYP. CONN. SEE 5/S011.2
U.N.O.

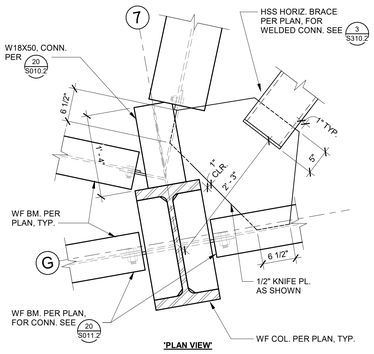

'PLAN VIEW'

CONN. DETAIL 1" = 1'-0" 28

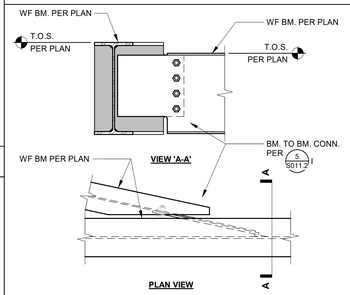

CONN. DET. 1" = 1'-0" 22

NOTE:
FOR TYP. CONN. SEE 5/S011.2
U.N.O.

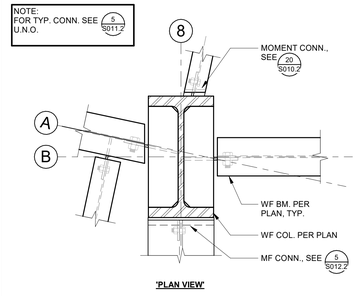

'PLAN VIEW'

CONN. DETAIL 1" = 1'-0" 23

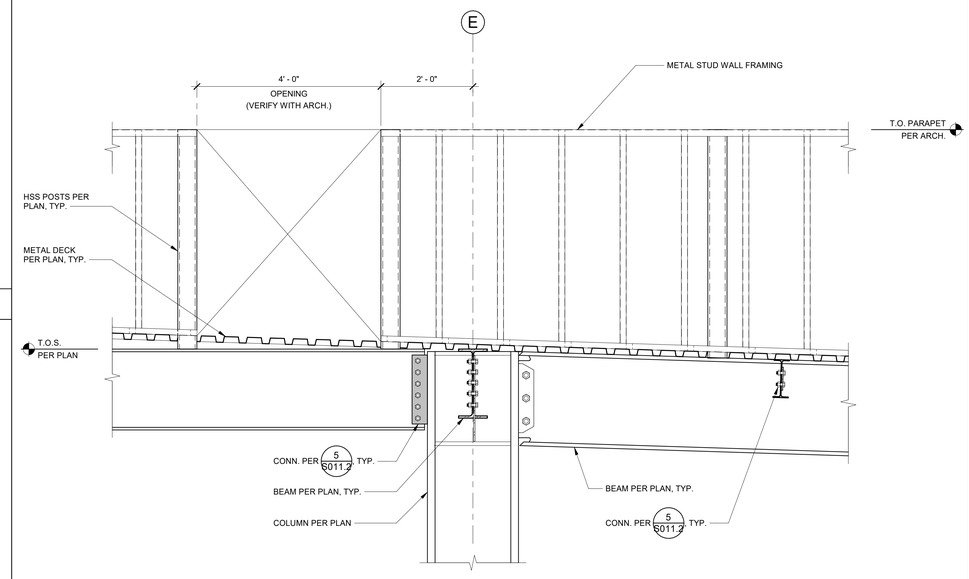

PARAPET WALL OPENING 3/4" = 1'-0" 7

NOTE:
FOR ITEMS SHOWN BUT NOT NOTED, SEE 15/S700.2

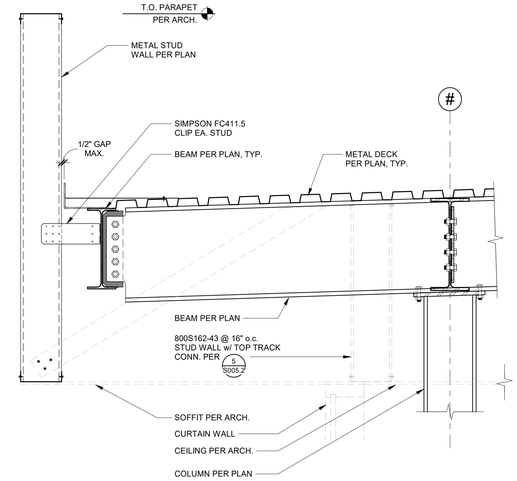

DETAIL 1" = 1'-0" 2

NOTE:
METAL DECK NOT SHOWN FOR CLARITY

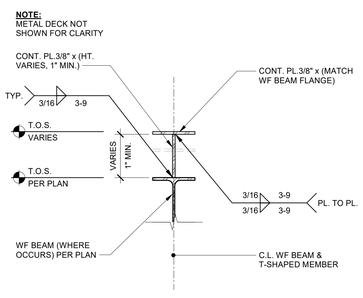

ROOF RIDGE DETAIL 1 1/2" = 1'-0" 29

NOTE:
METAL DECK NOT SHOWN FOR CLARITY

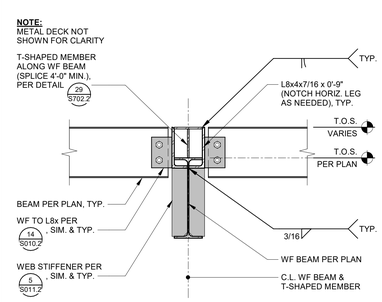

ROOF RIDGE DETAIL 1" = 1'-0" 24

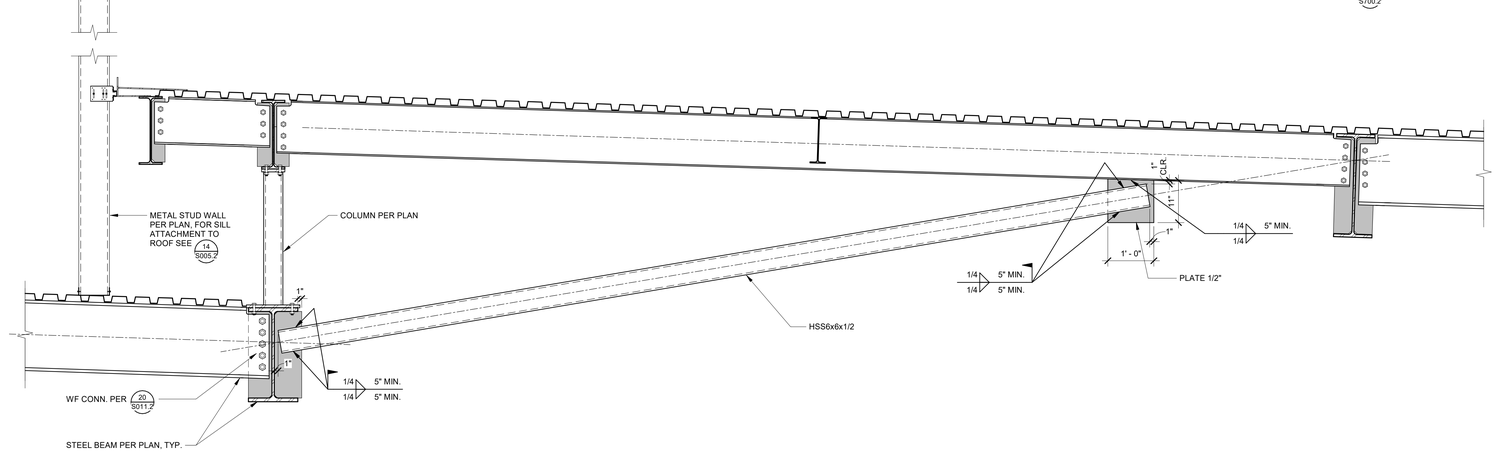

DETAIL 3/4" = 1'-0" 4

NOTE:
FOR ITEMS SHOWN BUT NOT NOTED, SEE 1/S700.2

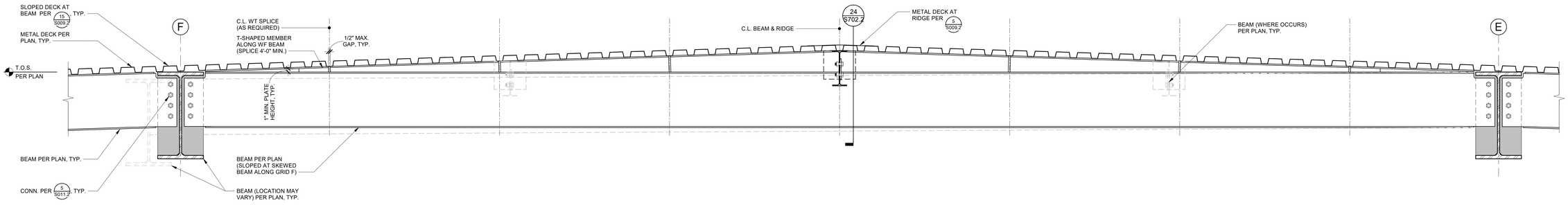

ROOF RIDGE DETAIL 1" = 1'-0" 5

TETER, INC.
FRESNO HEADQUARTERS
VISALIA | BAKERSFIELD | MODESTO | SAN LUIS OBISPO
ARCHITECTS ENGINEERS CONNECTED

VISALIA CAMPUS UNIVERSITY CENTER
COLLEGE OF THE SEQUOIAS
915 S. MOONEY BLVD
VISALIA, CALIFORNIA

DRAWING TITLE
ROOF FRAMING DETAILS

PROJECT NO.
22-12498

DRAWING
S702.2

PLOT DATE: 11/12/2025 7:27:10 PM

\\tetr-file1\Users\luis.valtierra\Documents\12498-S-UC_luis.valtierra.rvt

IDENTIFICATION STAMP
DIV. OF THE STATE ARCHITECT
APP: 02-122821 INC: 2
REVIEWED FOR
SS ☑ FLS ☑ ACS ☑
DATE: 11/20/2025

Teter, Inc. expressly reserves its common law copyright and other property rights in these plans. This document, the ideas and designs incorporated herein, as an instrument of professional service, is not to be used in whole or in part, for any other project without prior written authorization.

MARK	DATE	DESCRIPTION
A	11/13/2025	DSA BACKCHECK

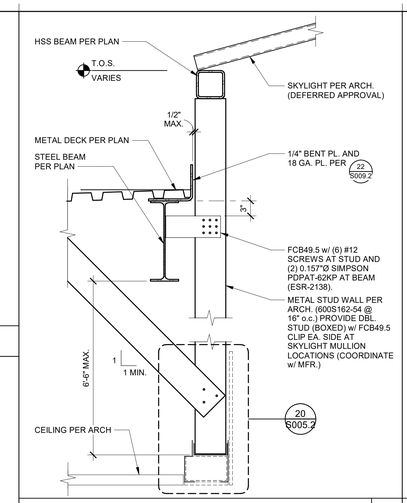

SKYLIGHT 1" = 1'-0" 11

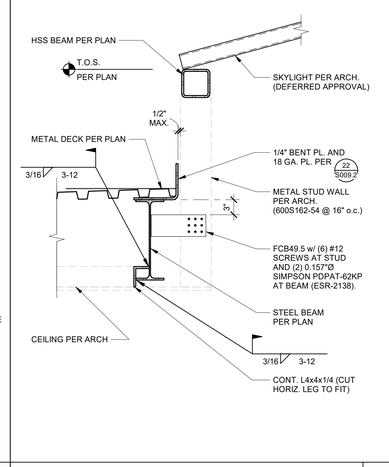

SKYLIGHT 1" = 1'-0" 6

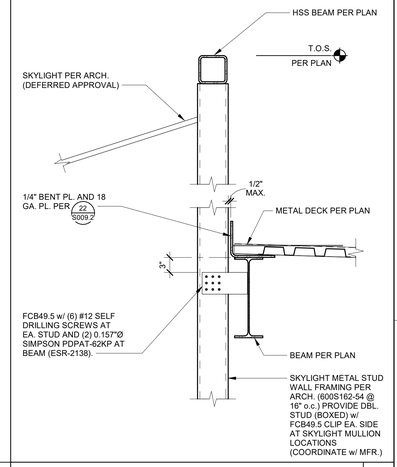

SKYLIGHT 1" = 1'-0" 1

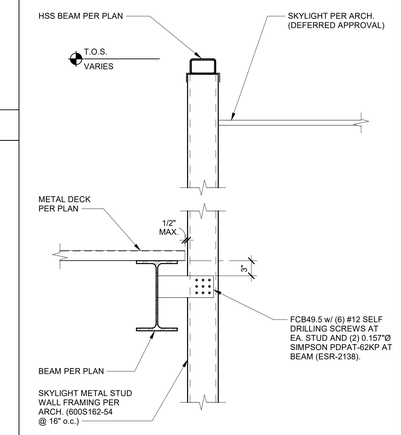

SKYLIGHT 1" = 1'-0" 13

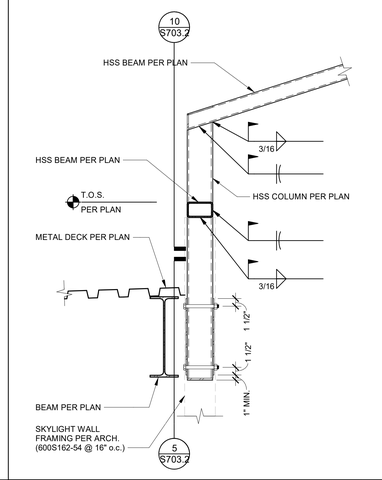

SKYLIGHT 1" = 1'-0" 8

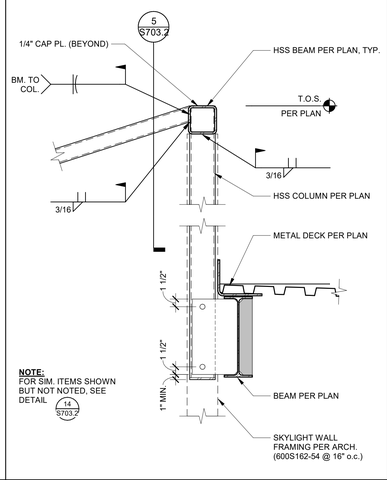

SKYLIGHT 1" = 1'-0" 3

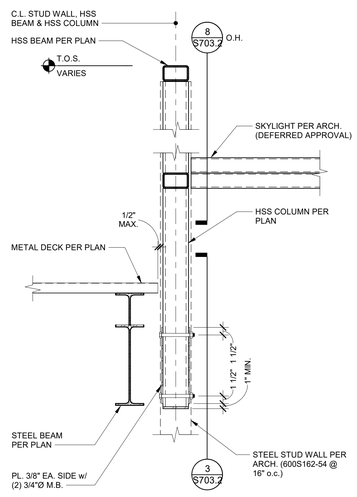

SKYLIGHT 1" = 1'-0" 20

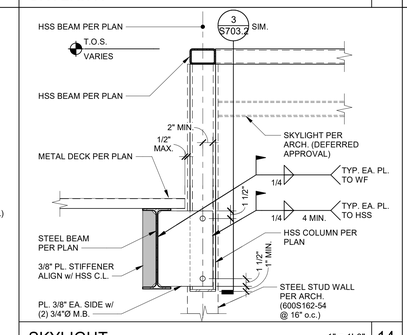

SKYLIGHT 1" = 1'-0" 14

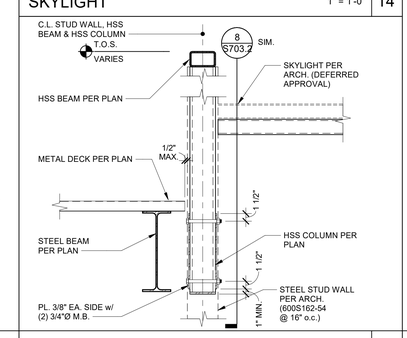

SKYLIGHT 1" = 1'-0" 15

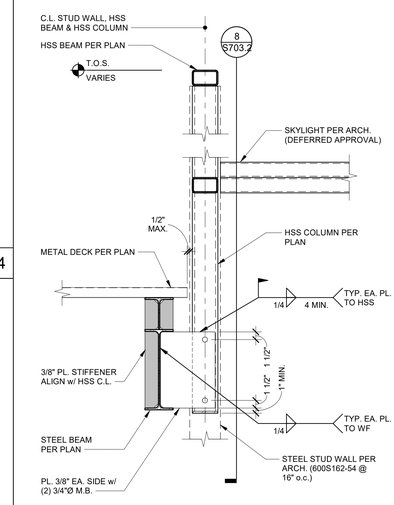

SKYLIGHT 1" = 1'-0" 10

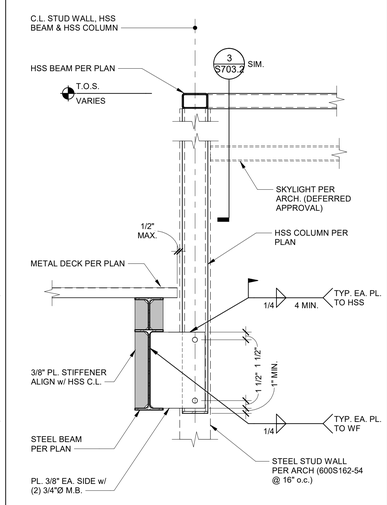

SKYLIGHT 1" = 1'-0" 5

TETER, INC.
ARCHITECTS ENGINEERS CONNECTED
FRESNO HEADQUARTERS
VISALIA | BAKERSFIELD | MODESTO | SAN LUIS OBISPO

TETER

VISALIA CAMPUS UNIVERSITY CENTER
COLLEGE OF THE SEQUOIAS
915 S. MOONEY BLVD
VISALIA, CALIFORNIA

DRAWING TITLE
SKYLIGHT FRAMING DETAILS

PROJECT NO.
22-12498

DRAWING
S703.2

PLOT DATE: 11/12/2025 7:27:10 PM

\\tet-file1\Users\luis.valtierra\Documents\12498-S-UC_luis.valtierra.rvt

IDENTIFICATION STAMP
DIV. OF THE STATE ARCHITECT
APP: 02-122821 INC: 2
REVIEWED FOR
SS ☑ FLS ☑ ACS ☑
DATE: 11/20/2025

Teter, Inc. expressly reserves its common law copyright and other property rights in these plans. This document, the ideas and designs incorporated herein, as an instrument of professional service, is not to be used in whole or part, for any other project without prior written authorization.

MARK	DATE	DESCRIPTION
A	11/13/2025	DSA BACKCHECK

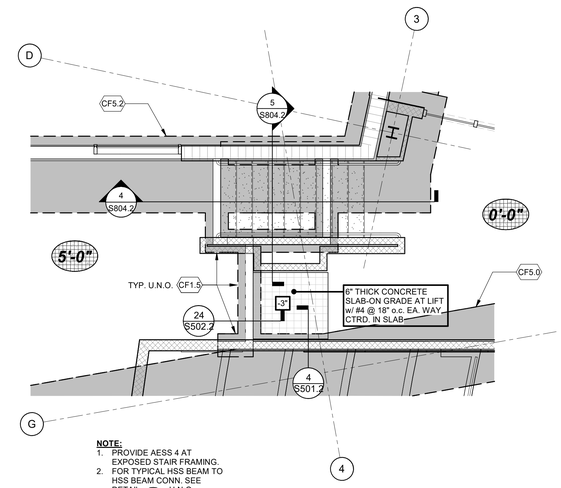

NOTE:
1. PROVIDE AESS 4 AT EXPOSED STAIR FRAMING.
2. FOR TYPICAL HSS BEAM TO HSS BEAM CONN. SEE DETAIL 9 S806.2 U.N.O.

NORTH

STAIR FOUNDATION PLAN - STAIR 4 (EXIT ACCESS) 1/4" = 1'-0" | 2

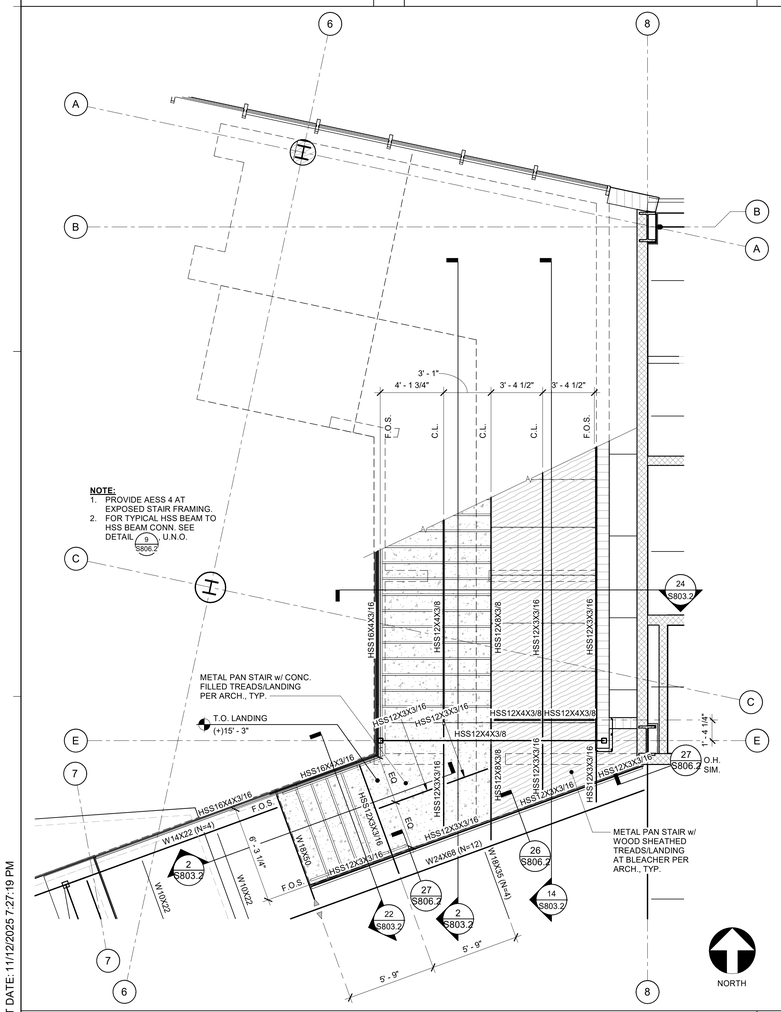

NOTE:
1. PROVIDE AESS 4 AT EXPOSED STAIR FRAMING.
2. FOR TYPICAL HSS BEAM TO HSS BEAM CONN. SEE DETAIL 9 S806.2 U.N.O.

NORTH

STAIR FLOOR PLAN - STAIR 1 (EXIT ACCESS) 1/4" = 1'-0" | 25

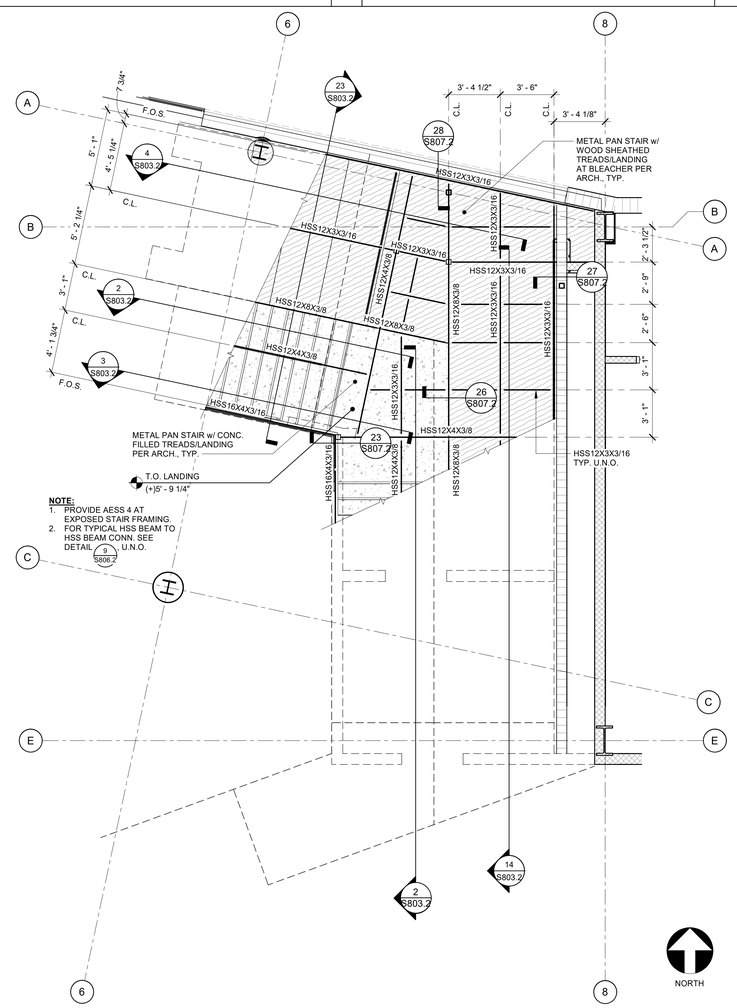

NOTE:
1. PROVIDE AESS 4 AT EXPOSED STAIR FRAMING.
2. FOR TYPICAL HSS BEAM TO HSS BEAM CONN. SEE DETAIL 9 S806.2 U.N.O.

NORTH

STAIR LANDING PLAN - STAIR 1 (EXIT ACCESS) 1/4" = 1'-0" | 15

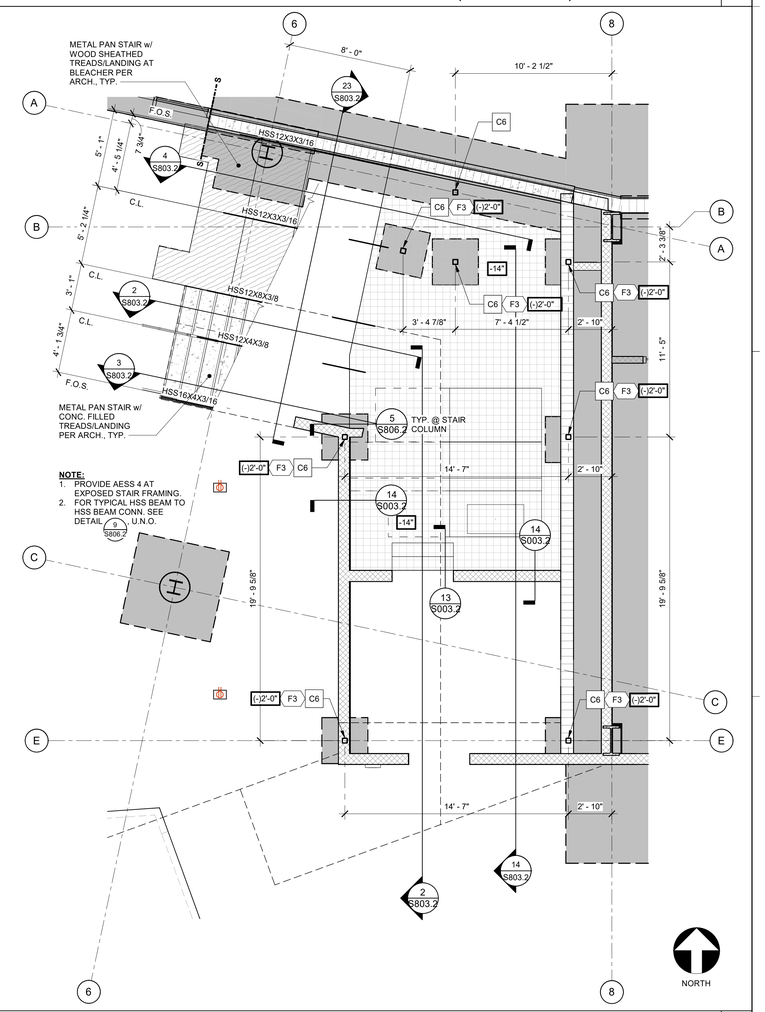

NOTE:
1. PROVIDE AESS 4 AT EXPOSED STAIR FRAMING.
2. FOR TYPICAL HSS BEAM TO HSS BEAM CONN. SEE DETAIL 9 S806.2 U.N.O.

NORTH

STAIR FOUNDATION PLAN - STAIR 1 (EXIT ACCESS) 1/4" = 1'-0" | 5

TETER, INC.
FRESNO HEADQUARTERS
VISALIA | BAKERSFIELD | MODESTO | SAN LUIS OBISPO
ARCHITECTS ENGINEERS CONNECTED

VISALIA CAMPUS UNIVERSITY CENTER
COLLEGE OF THE SEQUOIAS
915 S. MOONEY BLVD
VISALIA, CALIFORNIA

DRAWING TITLE
STAIR PLANS

PROJECT NO.
22-12498

DRAWING
S800.2

PLOT DATE: 11/12/2025 7:27:19 PM

\\tetr-file1\Users\luis.valtierra\Documents\12498-S-UC_luis.valtierra.rvt

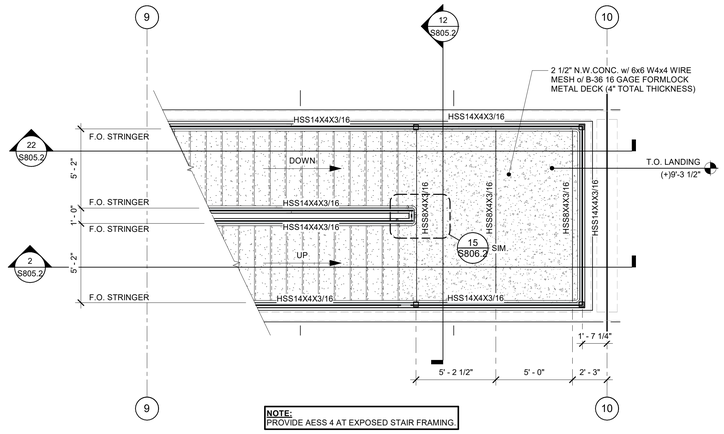

NOTE:
PROVIDE AESS 4 AT EXPOSED STAIR FRAMING.

NORTH

STAIR LANDING PLAN - STAIR 2 (EXIT ACCESS) 1/4" = 1'-0" 17

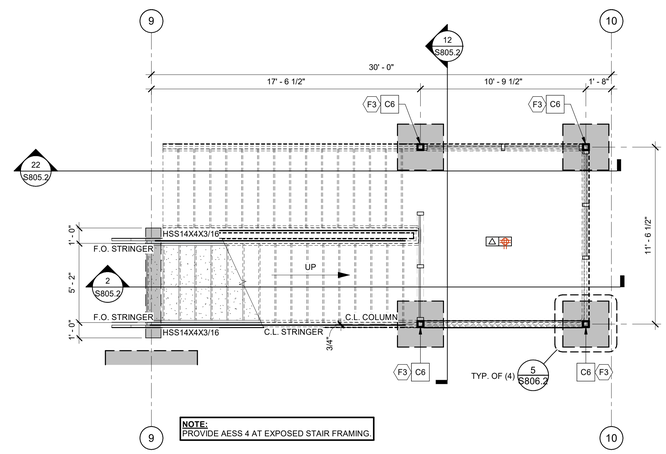

NOTE:
PROVIDE AESS 4 AT EXPOSED STAIR FRAMING.

NORTH

STAIR FOUNDATION PLAN - STAIR 2 (EXIT ACCESS) 1/4" = 1'-0" 2

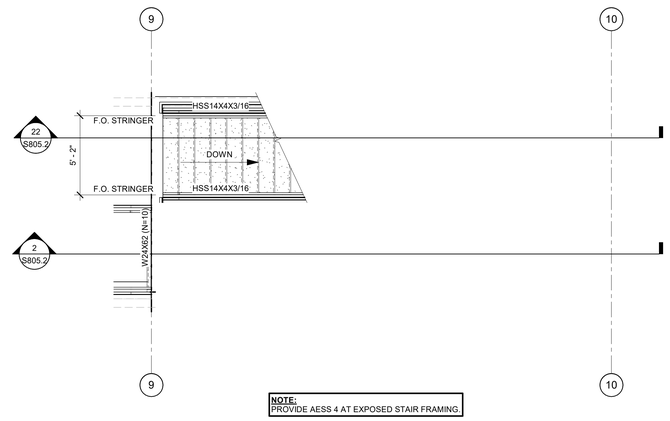

NOTE:
PROVIDE AESS 4 AT EXPOSED STAIR FRAMING.

NORTH

STAIR FLOOR PLAN - STAIR 2 (EXIT ACCESS) 1/4" = 1'-0" 4

IDENTIFICATION STAMP
DIV. OF THE STATE ARCHITECT
APP: 02-122821 INC: 2
REVIEWED FOR
SS ☑ FLS ☑ ACS ☑
DATE: 11/20/2025

Teter, Inc. expressly reserves its common law copyright and other property rights in these plans. This document, the ideas and designs incorporated herein, as an instrument of professional service, is not to be used in whole or part, for any other project without prior written authorization.

MARK	DATE	DESCRIPTION
A.	11/13/2025	DSA BACKCHECK

REGISTERED PROFESSIONAL ENGINEER
LUIS E. VALTIERRA
No. 55626
STRUCTURAL
STATE OF CALIFORNIA
12/4/25

TETER, INC.
FRESNO HEADQUARTERS
VISALIA | BAKERSFIELD | MODESTO | SAN LUIS OBISPO
ARCHITECTS ENGINEERS CONNECTED
TETER

VISALIA CAMPUS UNIVERSITY CENTER
COLLEGE OF THE SEQUOIAS
915 S. MOONEY BLVD
VISALIA, CALIFORNIA

DRAWING TITLE
STAIR PLANS

PROJECT NO.
22-12498

DRAWING
S801.2

PLOT DATE: 11/12/2025 7:27:25 PM

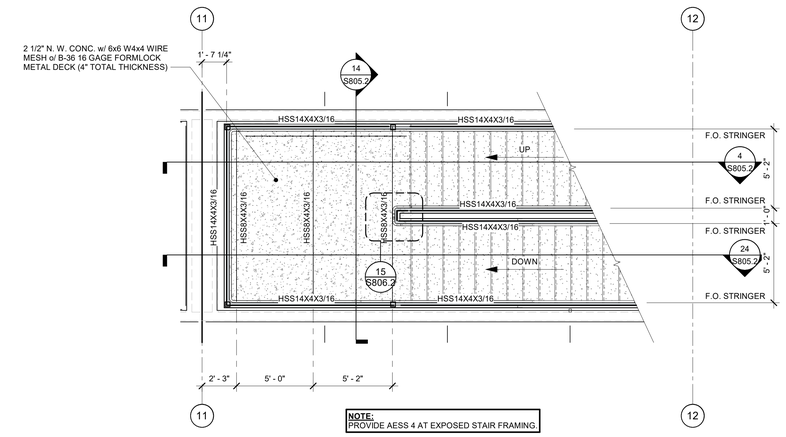

STAIR LANDING PLAN - STAIR 3 (EXIT ACCESS) 1/4" = 1'-0" 17

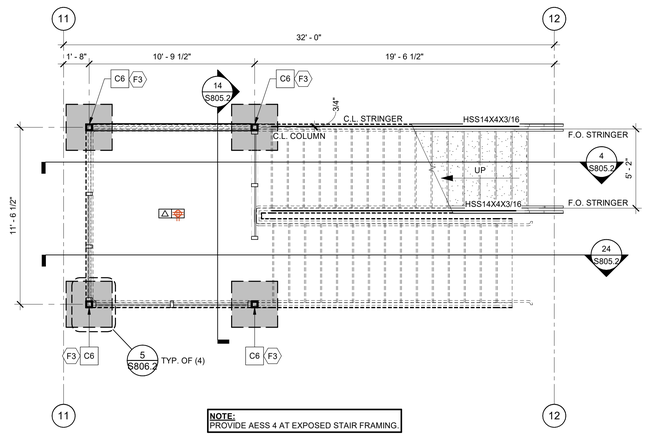

STAIR FOUNDATION PLAN - STAIR 3 (EXIT ACCESS) 1/4" = 1'-0" 2

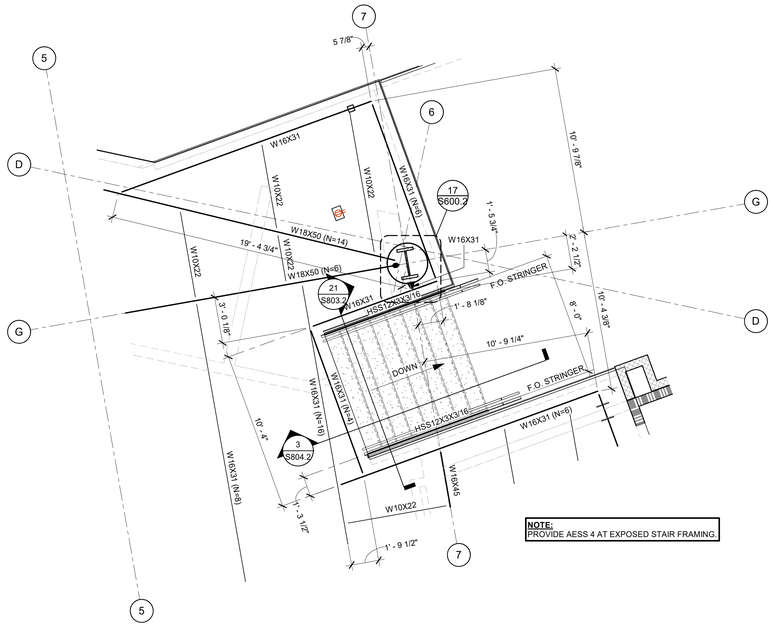

STAIR FLOOR PLAN - STAIR 5 (EXIT ACCESS) 1/4" = 1'-0" 19

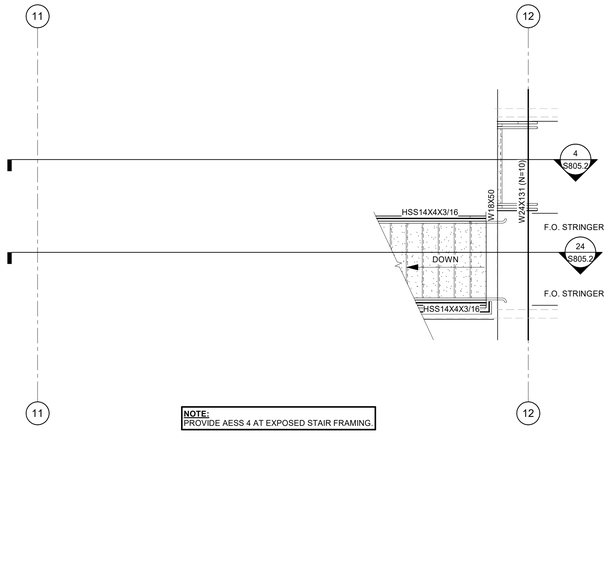

STAIR FLOOR PLAN - STAIR 3 (EXIT ACCESS) 1/4" = 1'-0" 4

IDENTIFICATION STAMP
DIV. OF THE STATE ARCHITECT
APP: 02-122821 INC: 2
REVIEWED FOR
SS ☑ FLS ☑ ACS ☑
DATE: 11/20/2025

Teter, Inc. expressly reserves its common law copyright and other property rights in these plans. This document, the ideas and designs incorporated herein, as an instrument of professional service, is not to be used in whole or in part, for any other project without prior written authorization.

MARK	DATE	DESCRIPTION
A	11/13/2025	DSA BACKCHECK

REGISTERED PROFESSIONAL ENGINEER
ERIC S. BAILEY
No. 55606
STRUCTURAL
STATE OF CALIFORNIA

TETER, INC.
FRESNO HEADQUARTERS
VISALIA | BAKERSFIELD | MODESTO | SAN LUIS OBISPO
ARCHITECTS ENGINEERS CONNECTED

VISALIA CAMPUS UNIVERSITY CENTER
COLLEGE OF THE SEQUOIAS
915 S. MOONEY BLVD
VISALIA, CALIFORNIA

DRAWING TITLE
STAIR PLANS

PROJECT NO.
22-12498

DRAWING
S802.2

\\tetr-file1\Users\luis.valtierra\Documents\12498-S-UC_luis.valtierra.rvt

PLOT DATE: 11/12/2025 7:27:32 PM

\\tefr-file1\Users\luis.valtierra\Documents\12498-S-UC_luis.valtierra.rvt

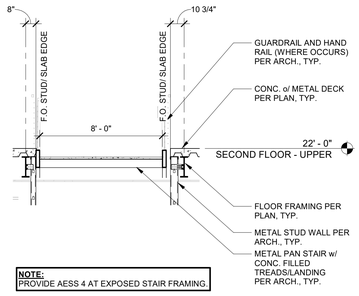

NOTE:
PROVIDE AESS 4 AT EXPOSED STAIR FRAMING.

SECTION - STAIR 5 (EXIT ACCESS) 1/4" = 1'-0" | 21

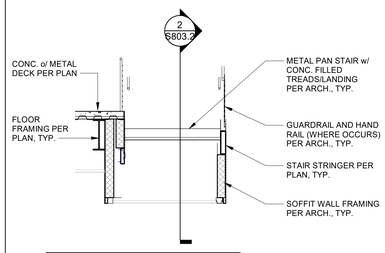

NOTE:
PROVIDE AESS 4 AT EXPOSED STAIR FRAMING.

SECTION - STAIR 1 (EXIT ACCESS) 1/4" = 1'-0" | 22

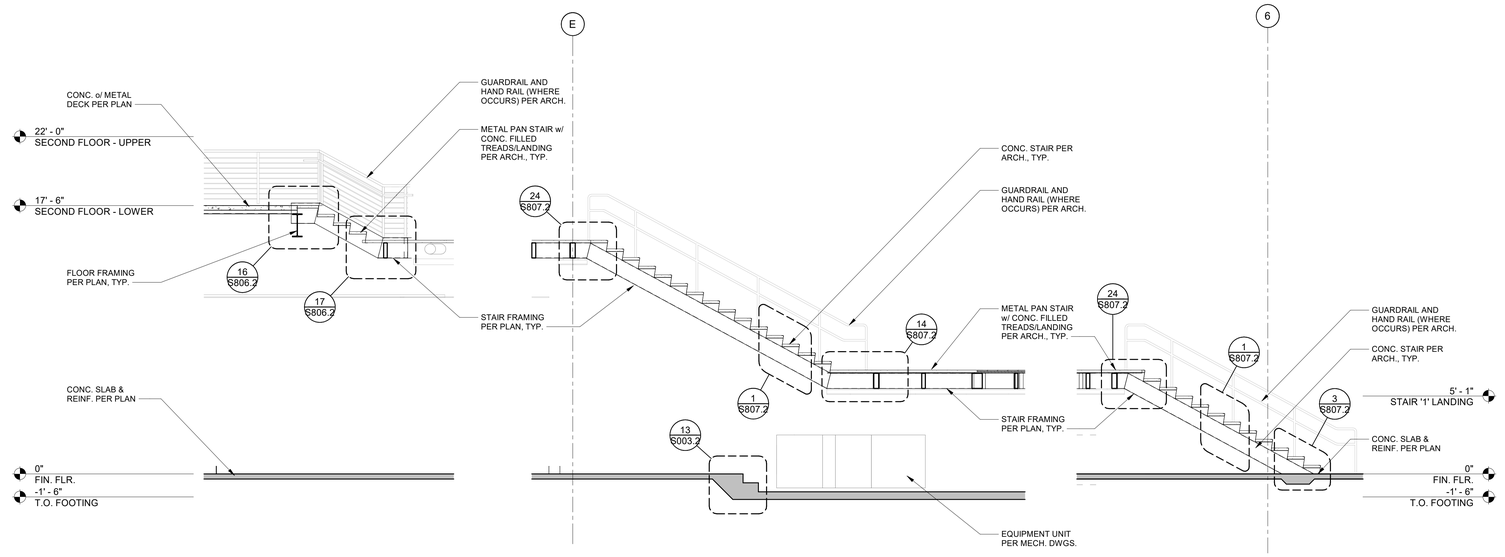

NOTE:
PROVIDE AESS 4 AT EXPOSED STAIR FRAMING.

SECTION - STAIR 1 (EXIT ACCESS) 1/4" = 1'-0" | 2

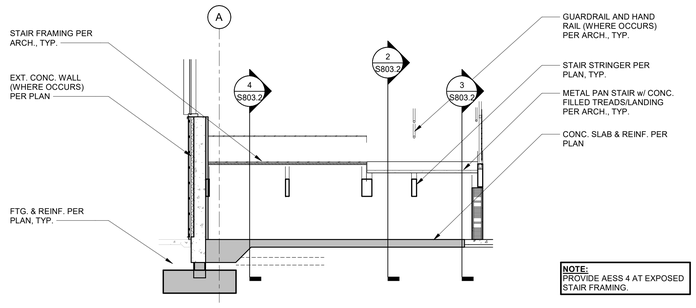

NOTE:
PROVIDE AESS 4 AT EXPOSED STAIR FRAMING.

SECTION - STAIR 1 (EXIT ACCESS) 1/4" = 1'-0" | 23

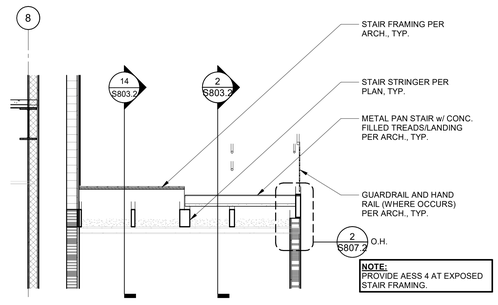

NOTE:
PROVIDE AESS 4 AT EXPOSED STAIR FRAMING.

SECTION - STAIR 1 (EXIT ACCESS) 1/4" = 1'-0" | 24

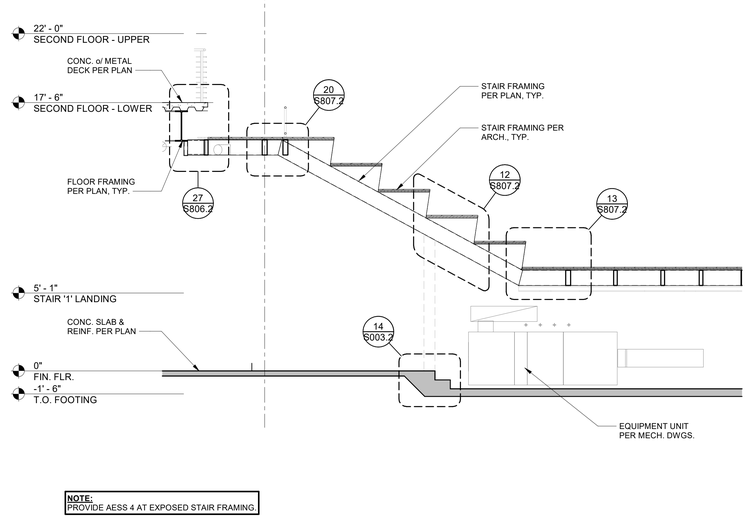

NOTE:
PROVIDE AESS 4 AT EXPOSED STAIR FRAMING.

SECTION - STAIR 1 (EXIT ACCESS) 1/4" = 1'-0" | 14

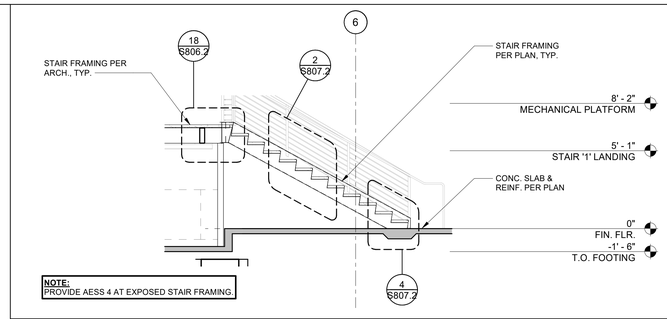

NOTE:
PROVIDE AESS 4 AT EXPOSED STAIR FRAMING.

SECTION - STAIR 1 (EXIT ACCESS) 1/4" = 1'-0" | 3

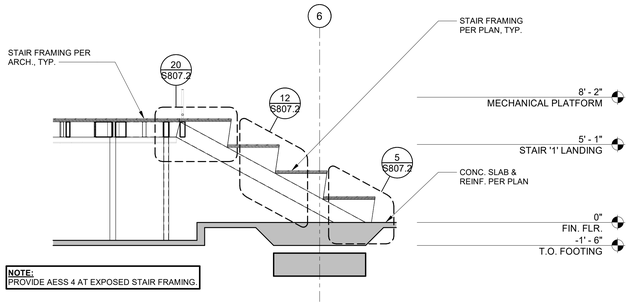

NOTE:
PROVIDE AESS 4 AT EXPOSED STAIR FRAMING.

SECTION - STAIR 1 (EXIT ACCESS) 1/4" = 1'-0" | 4

IDENTIFICATION STAMP
DIV. OF THE STATE ARCHITECT
APP: 02-122821 INC: 2
REVIEWED FOR
SS ☑ FLS ☑ ACS ☑
DATE: 11/20/2025

Teter, Inc. expressly reserves its common law copyright and other property rights in these plans. This document, the ideas and designs incorporated herein, as an instrument of professional service, is not to be used in whole or in part, for any other project without prior written authorization.

MARK	DATE	DESCRIPTION
A	11/13/2025	DSA BACKCHECK

REGISTERED PROFESSIONAL ENGINEER
EMILY S. BAILEY
No. 55658
STRUCTURAL
STATE OF CALIFORNIA

TETER, INC.
FRESNO HEADQUARTERS
VISALIA | BAKERSFIELD | MODESTO | SAN LUIS OBISPO
ARCHITECTS ENGINEERS CONNECTED
TETER

VISALIA CAMPUS UNIVERSITY CENTER
COLLEGE OF THE SEQUOIAS
915 S. MOONEY BLVD
VISALIA, CALIFORNIA

DRAWING TITLE
STAIR SECTIONS

PROJECT NO.
22-12498

DRAWING
S803.2

PLOT DATE: 11/12/2025 7:27:56 PM

\\tet-file1\Users\luis.valtierra\Documents\12498-S-UC_luis.valtierra.rvt

IDENTIFICATION STAMP
DIV. OF THE STATE ARCHITECT
APP: 02-122821 INC: 2
REVIEWED FOR
SS ☑ FLS ☑ ACS ☑
DATE: 11/20/2025

Teter, Inc. expressly reserves its common law copyright and other property rights in these plans. This document, the ideas and designs incorporated herein, as an instrument of professional service, is not to be used in whole or part, for any other project without prior written authorization.

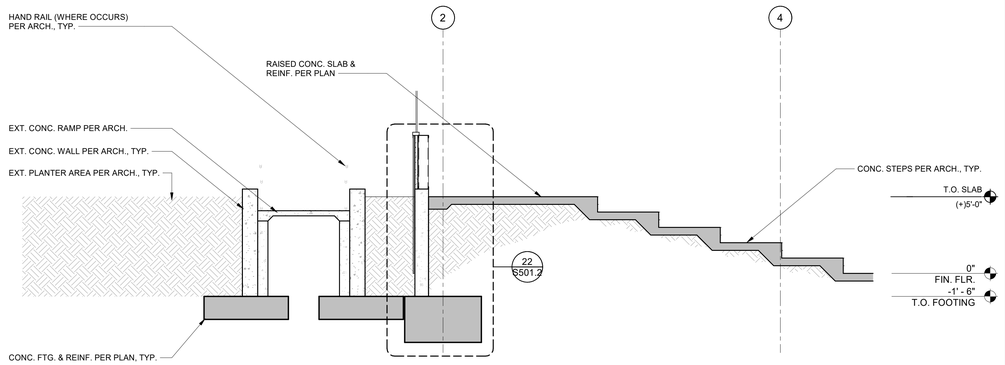

SECTION - LECTURE SEATING 1/4" = 1'-0" | 2

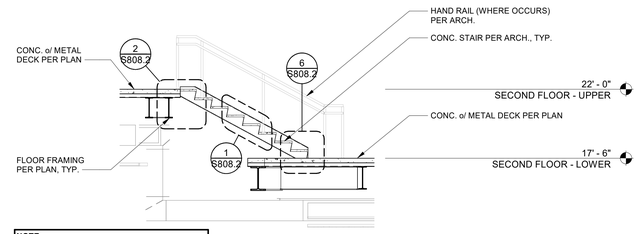

NOTE:
PROVIDE AESS 4 AT EXPOSED STAIR FRAMING.

SECTION - STAIR 5 (EXIT ACCESS) 1/4" = 1'-0" | 3

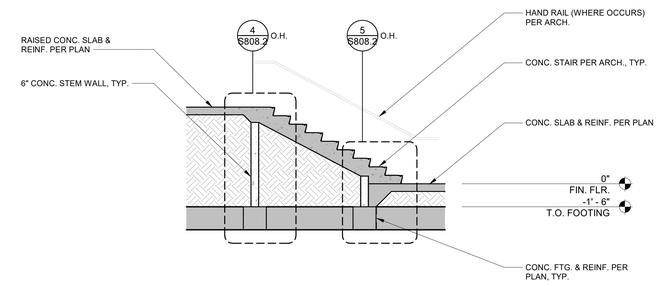

SECTION - STAIR 4 (EXIT ACCESS) 1/4" = 1'-0" | 4

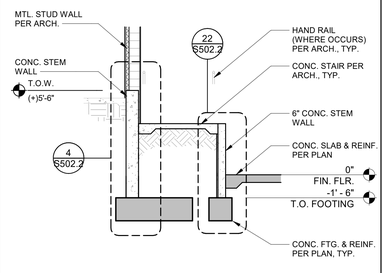

SECTION - STAIR 4 (EXIT ACCESS) 1/4" = 1'-0" | 5

MARK	DATE	DESCRIPTION
A	11/13/2025	DSA BACKCHECK



TETER, INC.
FRESNO HEADQUARTERS
VISALIA | BAKERSFIELD | MODESTO | SAN LUIS OBISPO
ARCHITECTS ENGINEERS CONNECTED

VISALIA CAMPUS UNIVERSITY CENTER
COLLEGE OF THE SEQUOIAS
915 S. MOONEY BLVD
VISALIA, CALIFORNIA

DRAWING TITLE
STAIR SECTIONS

PROJECT NO.
22-12498

DRAWING
S804.2

PLOT DATE: 11/12/2025 7:28:05 PM

\\tetr-file1\Users\luis.valtierra\Documents\12498-S-UC_luis.valtierra.rvt

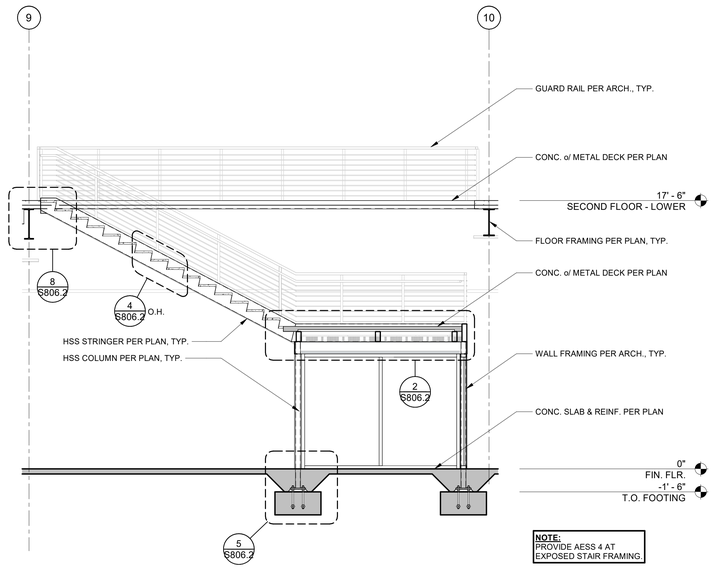

SECTION - STAIR 2 (EXIT ACCESS) 1/4" = 1'-0" | 22

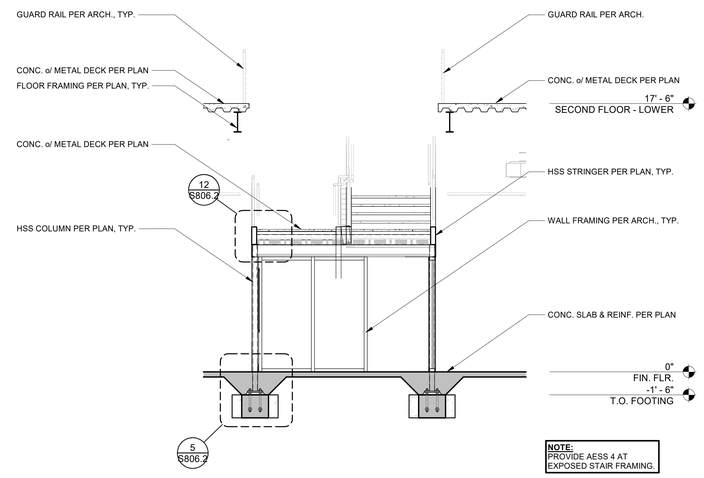

SECTION - STAIR 2 (EXIT ACCESS) 1/4" = 1'-0" | 12

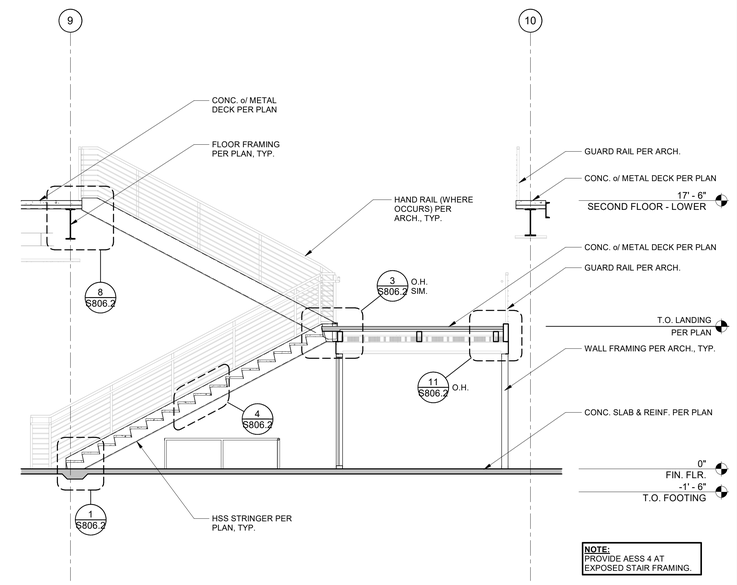

SECTION - STAIR 2 (EXIT ACCESS) 1/4" = 1'-0" | 2

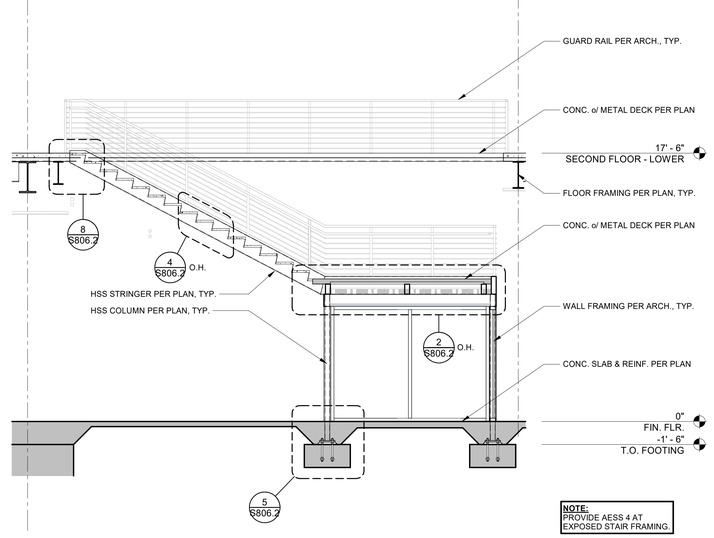

SECTION - STAIR 3 (EXIT ACCESS) 1/4" = 1'-0" | 24

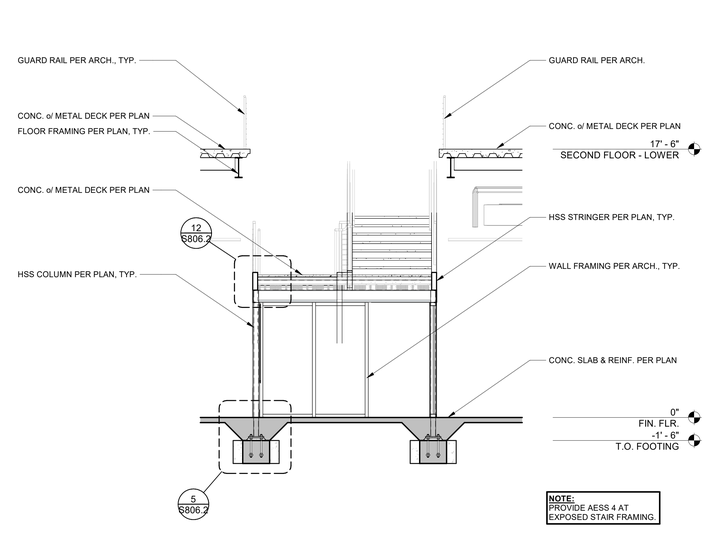

SECTION - STAIR 3 (EXIT ACCESS) 1/4" = 1'-0" | 14

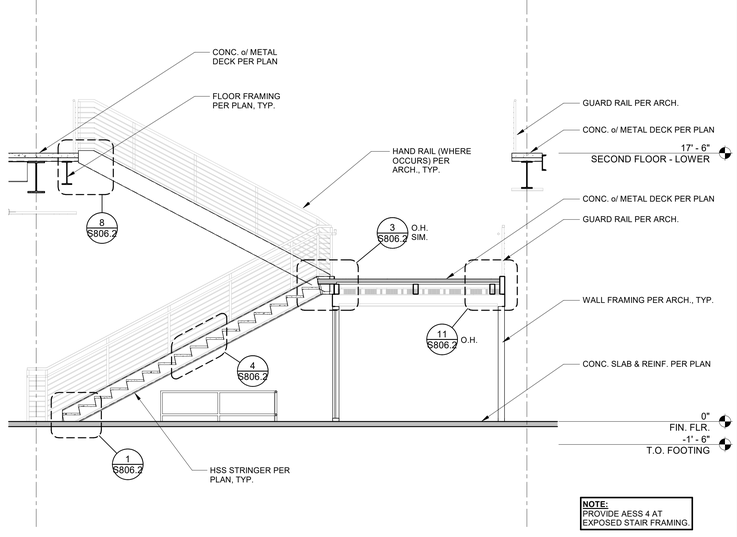

SECTION - STAIR 3 (EXIT ACCESS) 1/4" = 1'-0" | 4

IDENTIFICATION STAMP
DIV. OF THE STATE ARCHITECT
APP: 02-122821 INC: 2
REVIEWED FOR
SS ☑ FLS ☑ ACS ☑
DATE: 11/20/2025

Teter, Inc. expressly reserves its common law copyright and other property rights in these plans. This document, the ideas and designs incorporated herein, as an instrument of professional service, is not to be used in whole or in part, for any other project without prior written authorization.

MARK	DATE	DESCRIPTION
A	11/13/2025	DSA BACKCHECK

REGISTERED PROFESSIONAL ENGINEER
LUIS S. VALTIERRA
No. 55629
STRUCTURAL
STATE OF CALIFORNIA

TETER, INC.
FRESNO HEADQUARTERS
VISALIA | BAKERSFIELD | MODESTO | SAN LUIS OBISPO
ARCHITECTS ENGINEERS CONNECTED

TETER

VISALIA CAMPUS UNIVERSITY CENTER
COLLEGE OF THE SEQUOIAS
915 S. MOONEY BLVD
VISALIA, CALIFORNIA

DRAWING TITLE
STAIR SECTIONS

PROJECT NO.
22-12498

DRAWING
S805.2

PLOT DATE: 11/12/2025 7:28:20 PM

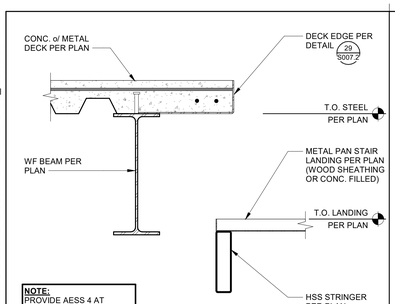

STAIR DETAIL - STAIR 1 — 1" = 1'-0" — 26

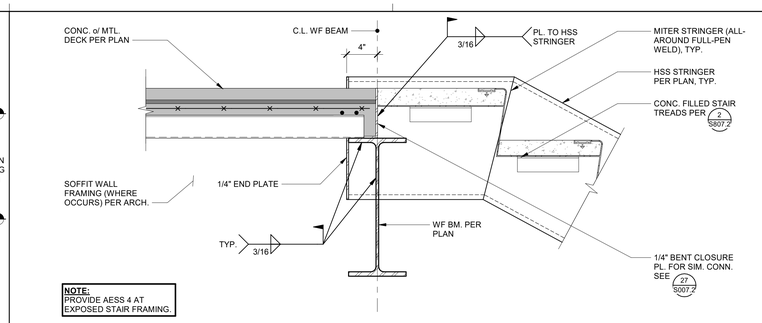

STAIR DETAIL - STAIR 1 — 1 1/2" = 1'-0" — 16

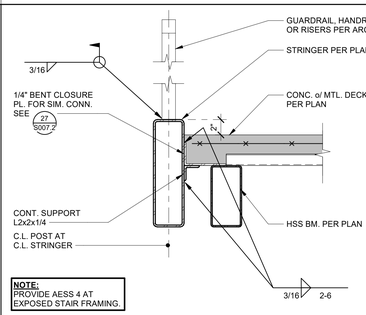

STAIR DETAIL — 1 1/2" = 1'-0" — 11

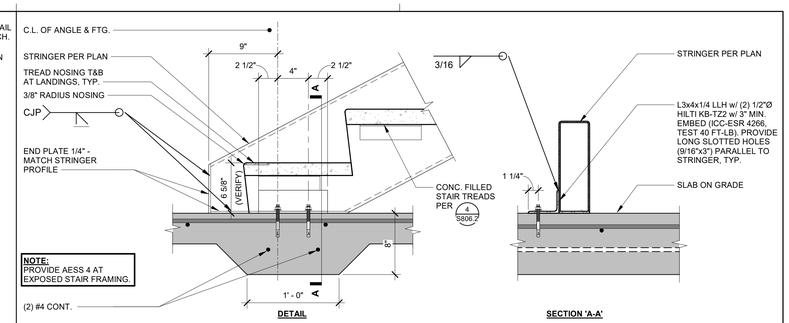

STAIR DETAIL — 1 1/2" = 1'-0" — 1



STAIR DETAIL - STAIR 1 — 1" = 1'-0" — 27

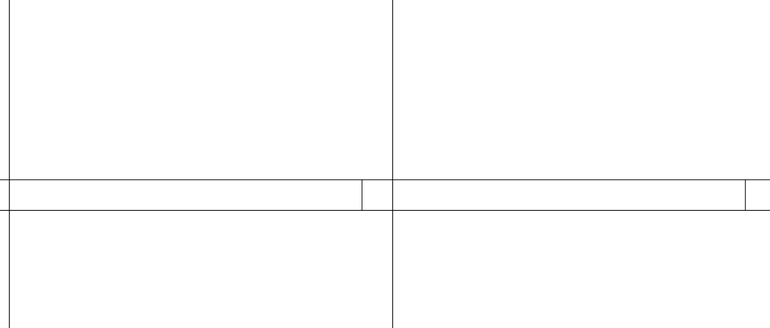

STAIR DETAIL - STAIR 1 — 1 1/2" = 1'-0" — 17

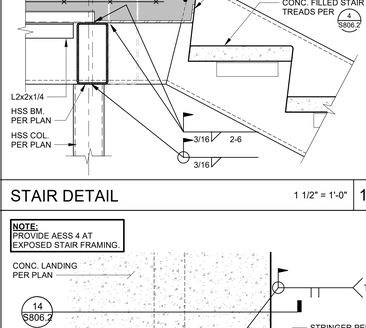

STAIR DETAIL — 1 1/2" = 1'-0" — 12

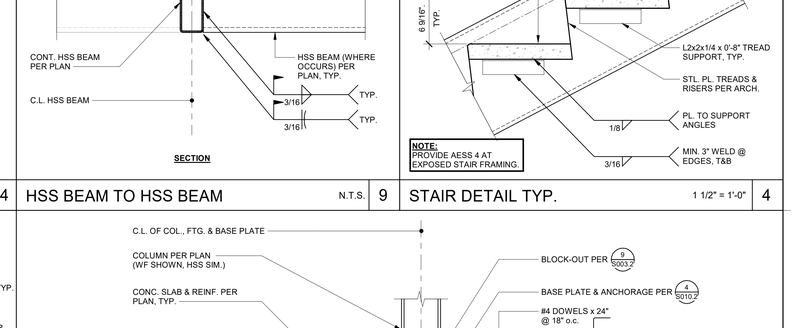

STAIR DETAIL — 1 1/2" = 1'-0" — 2

STAIR DETAIL - STAIR 1 — 1 1/2" = 1'-0" — 18

STAIR DETAIL — 1 1/2" = 1'-0" — 13

STAIR DETAIL — 1 1/2" = 1'-0" — 8

STAIR DETAIL — 1 1/2" = 1'-0" — 3

STAIR DETAIL — 1 1/2" = 1'-0" — 14

HSS BEAM TO HSS BEAM — N.T.S. — 9

STAIR DETAIL TYP. — 1 1/2" = 1'-0" — 4

STAIR DETAIL — 1 1/2" = 1'-0" — 15

TYP. ISOLATED FOOTING AT STAIR LANDING — 3/4" = 1'-0" — 5

\\tetr-file1\Users\luis.valtierra\Documents\12498-S-UC_luis.valtierra.rvt
PLOT DATE: 11/12/2025 7:28:21 PM

IDENTIFICATION STAMP
DIV. OF THE STATE ARCHITECT
APP: 02-122821 INC: 2
REVIEWED FOR
SS ☑ FLS ☑ ACS ☑
DATE: 11/20/2025

Teter, Inc. expressly reserves its common law copyright and other property rights in these plans. This document, the ideas and designs incorporated herein, as an instrument of professional service, is not to be used in whole or in part, for any other project without prior written authorization.

MARK	DATE	DESCRIPTION
A.	11/13/2025	DSA BACKCHECK



TETER, INC.
FRESNO HEADQUARTERS
VISALIA | BAKERSFIELD | MODESTO | SAN LUIS OBISPO
ARCHITECTS ENGINEERS CONNECTED

VISALIA CAMPUS UNIVERSITY CENTER
COLLEGE OF THE SEQUOIAS
915 S. MOONEY BLVD
VISALIA, CALIFORNIA

DRAWING TITLE
STAIR FRAMING DETAILS

PROJECT NO.
22-12498

DRAWING
S806.2

\\tetr-file1\Users\lus.valterra\Documents\12498-S-UC_lus.valterra.rvt

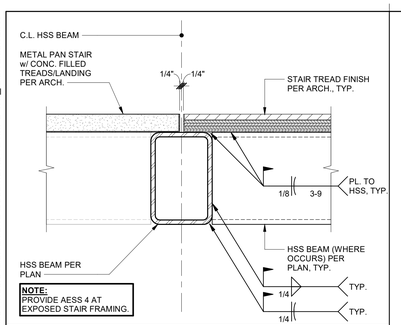

STAIR DETAIL - STAIR 1 | 1 1/2" = 1'-0" | 26

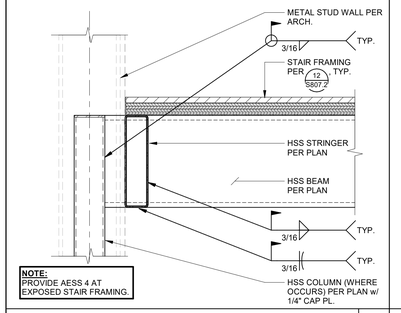

BLEACHER DETAIL - STAIR 1 | 1 1/2" = 1'-0" | 27

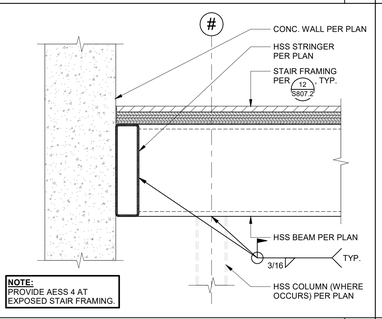

BLEACHER DETAIL - STAIR 1 | 1 1/2" = 1'-0" | 28

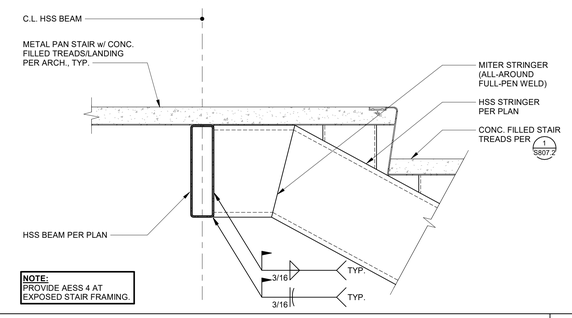

STAIR DETAIL - STAIR 1 | 1 1/2" = 1'-0" | 24

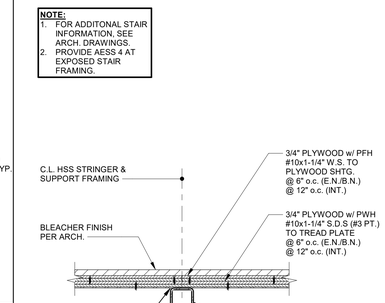

BLEACHER DETAIL - STAIR 1 | 1 1/2" = 1'-0" | 22

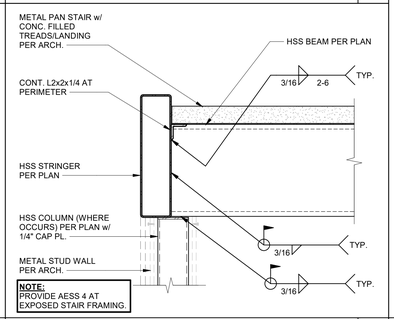

STAIR DETAIL - STAIR 1 | 1 1/2" = 1'-0" | 23

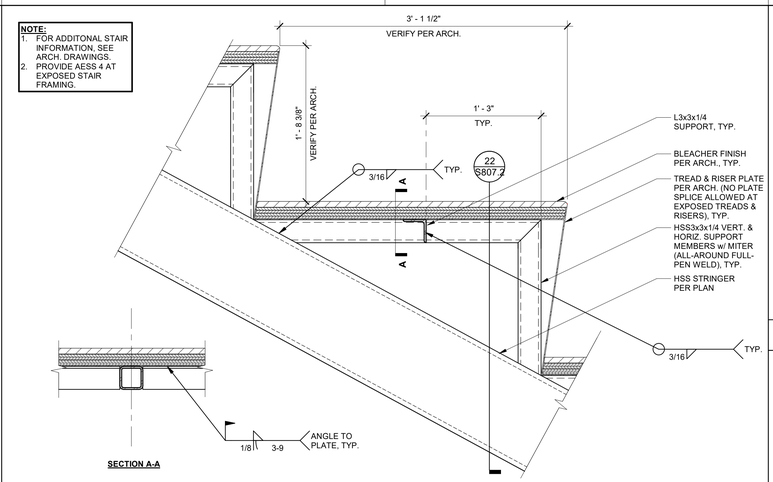

BLEACHER DETAIL - STAIR 1 | 1 1/2" = 1'-0" | 12

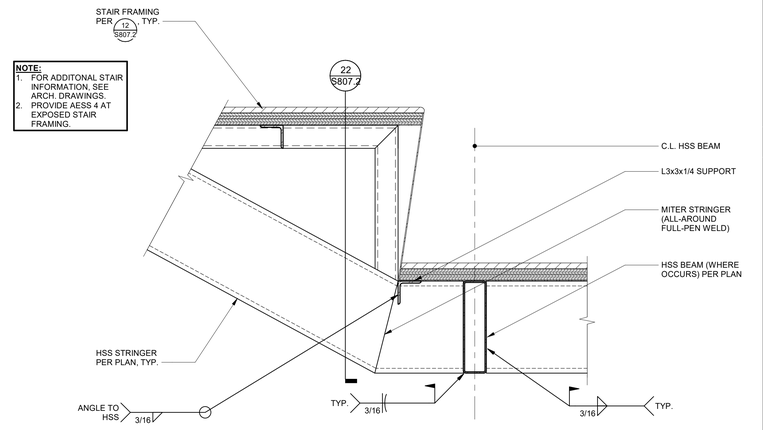

BLEACHER DETAIL - STAIR 1 | 1 1/2" = 1'-0" | 13

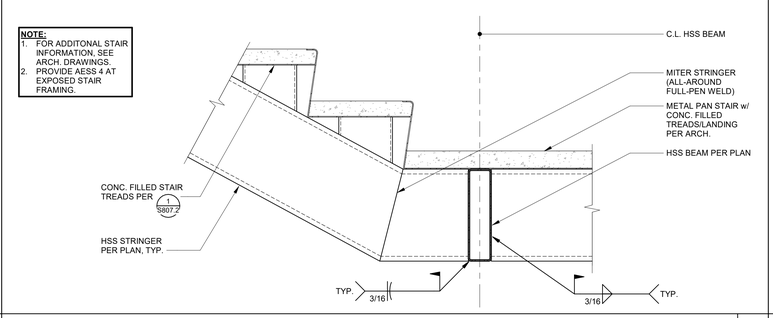

STAIR DETAIL - STAIR 1 | 1 1/2" = 1'-0" | 14

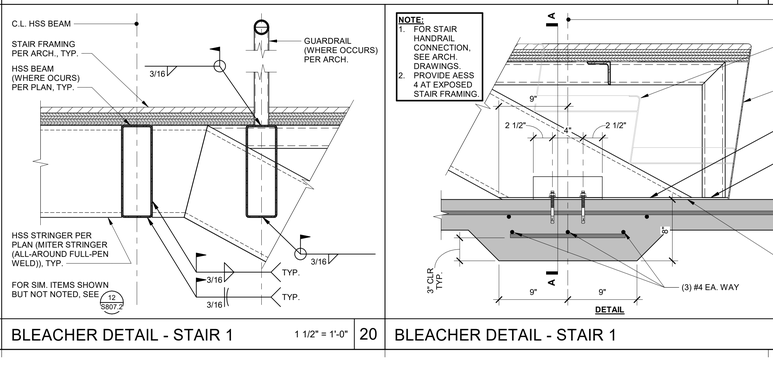

BLEACHER DETAIL - STAIR 1 | 1 1/2" = 1'-0" | 20

STAIR DETAIL - STAIR 1 | 1 1/2" = 1'-0" | 5

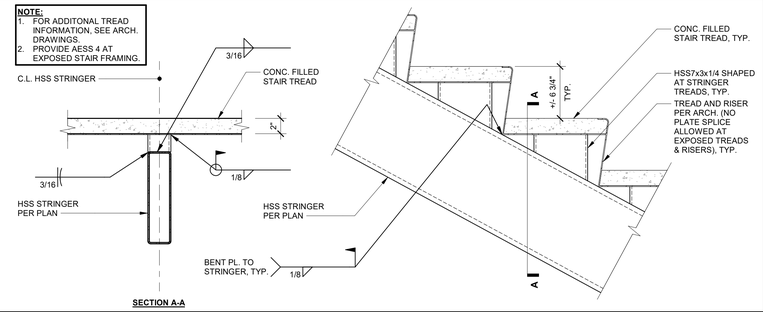

STAIR DETAIL - STAIR 1 | 1 1/2" = 1'-0" | 1

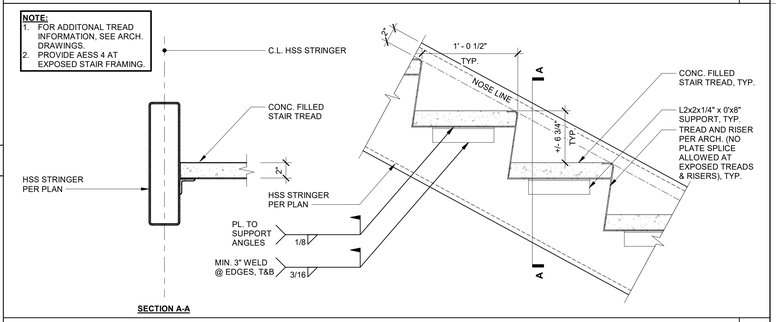

STAIR DETAIL - STAIR 1 | 1 1/2" = 1'-0" | 2

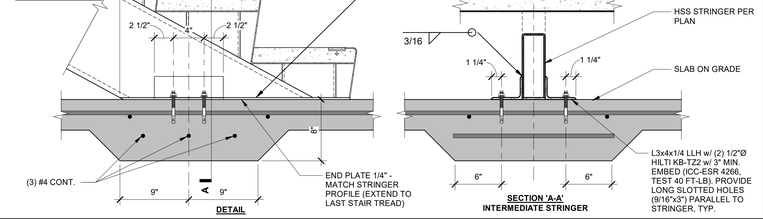

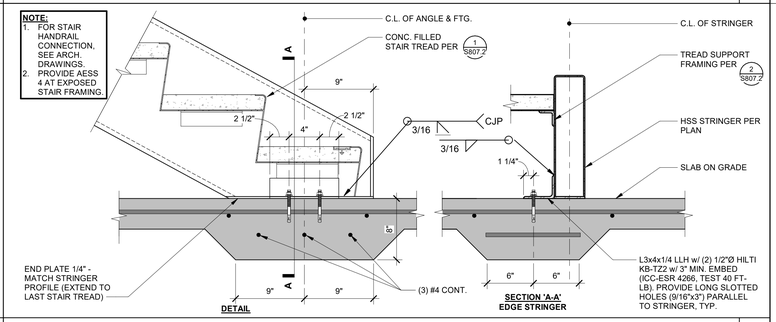

STAIR DETAIL - STAIR 1 | 1 1/2" = 1'-0" | 4

IDENTIFICATION STAMP
DIV. OF THE STATE ARCHITECT
APP: 02-122821 INC: 2
REVIEWED FOR
SS ☑ FLS ☑ ACS ☑
DATE: 11/20/2025

Teter, Inc. expressly reserves its common law copyright and other property rights in these plans. This document, the ideas and designs incorporated herein, as an instrument of professional service, is not to be used in whole or in part, for any other project without prior written authorization.

MARK	DATE	DESCRIPTION
A	11/13/2025	DSA BACKCHECK



TETER, INC.
ARCHITECTS ENGINEERS CONNECTED
FRESNO HEADQUARTERS
VISALIA | BAKERSFIELD | MODESTO | SAN LUIS OBISPO

TETER

VISALIA CAMPUS UNIVERSITY CENTER
COLLEGE OF THE SEQUOIAS
915 S. MOONEY BLVD
VISALIA, CALIFORNIA

DRAWING TITLE
STAIR FRAMING DETAILS

PROJECT NO.
22-12498

DRAWING
S807.2

PLOT DATE: 11/12/2025 7:28:29 PM

\\tet-file1\Users\luis.valtierra\Documents\12498-S-UC_luis.valtierra.rvt

NOTE:
PROVIDE AESS 4 AT EXPOSED STAIR FRAMING.

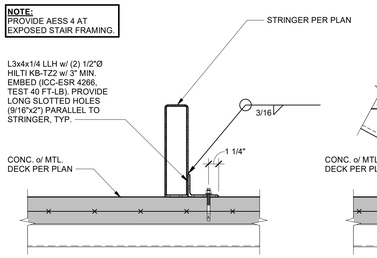

SECTION 'A-A'

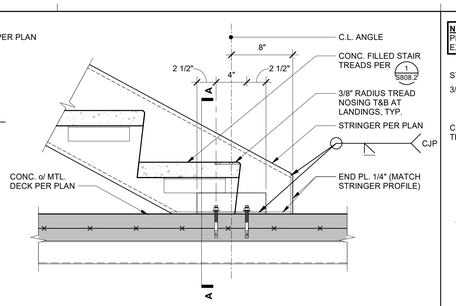

DETAIL

STAIR DETAIL - STAIR 5 — 1 1/2" = 1'-0" — 6

NOTE:
PROVIDE AESS 4 AT EXPOSED STAIR FRAMING.

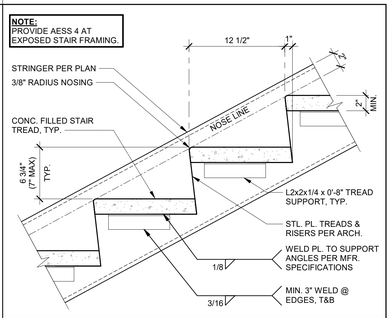

STAIR DETAIL - STAIR 5 — 1 1/2" = 1'-0" — 1

NOTE:
PROVIDE AESS 4 AT EXPOSED STAIR FRAMING.

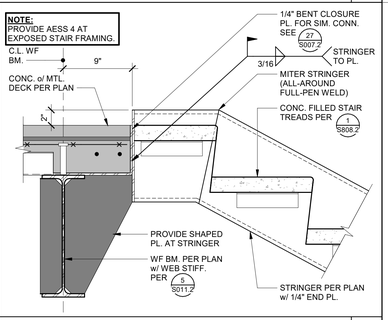

STAIR DETAIL - STAIR 5 — 1 1/2" = 1'-0" — 2

NOTE:
SEE ARCH. DRAWINGS FOR ADDITIONAL STEP INFORMATION

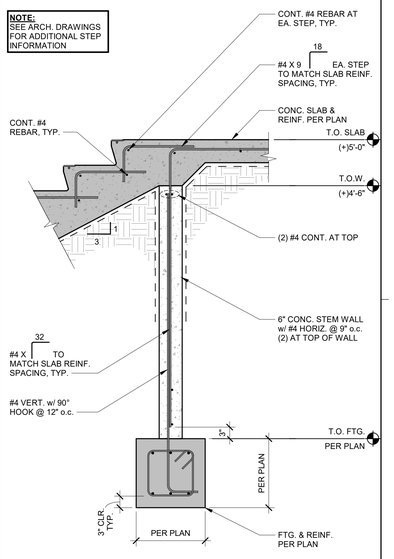

STAIR DETAIL - STAIR 4 — 3/4" = 1'-0" — 4

NOTE:
SEE ARCH. DRAWINGS FOR ADDITIONAL STEP INFORMATION

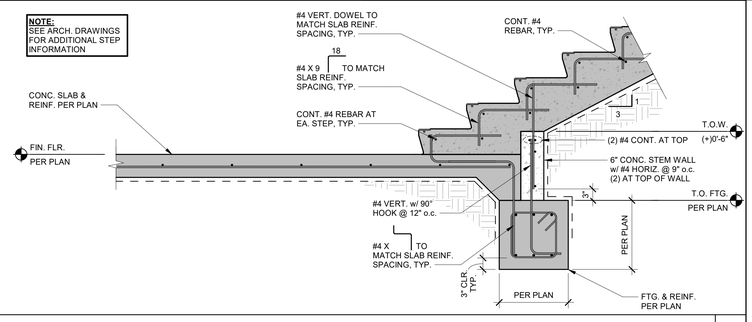

STAIR DETAIL - STAIR 4 — 3/4" = 1'-0" — 5

IDENTIFICATION STAMP
DIV. OF THE STATE ARCHITECT
APP: 02-122821 INC: 2
REVIEWED FOR
SS ☑ FLS ☑ ACS ☑
DATE: 11/20/2025

© Teter, Inc. expressly reserves its common law copyright and other property rights in these plans. This document, the ideas and designs incorporated herein, as an instrument of professional service, is not to be used in whole or part, for any other project without prior written authorization.

MARK	DATE	DESCRIPTION
A.	11/13/2025	DSA BACKCHECK

REGISTERED PROFESSIONAL ENGINEER — STEVEN S. BAILEY — No. 55608 — STRUCTURAL — STATE OF CALIFORNIA

TETER, INC.
ARCHITECTS ENGINEERS CONNECTED
FRESNO HEADQUARTERS
VISALIA | BAKERSFIELD | MODESTO | SAN LUIS OBISPO

TETER

VISALIA CAMPUS UNIVERSITY CENTER
COLLEGE OF THE SEQUOIAS
915 S. MOONEY BLVD
VISALIA, CALIFORNIA

PROJECT NO.
22-12498

DRAWING TITLE
STAIR FRAMING DETAILS

DRAWING
S808.2

PLOT DATE: 11/12/2025 7:28:32 PM

\\tet-file1\Users\luis.valtierra\Documents\12498-S-UC_luis.valtierra.rvt

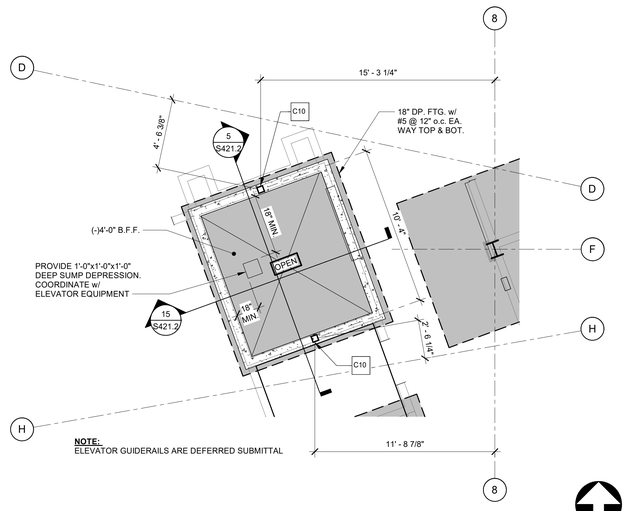

NOTE:
ELEVATOR GUIDERAILS ARE DEFERRED SUBMITTAL

NORTH

PARTIAL ENLARGED FOUNDATION PLAN 1/4" = 1'-0" | 12

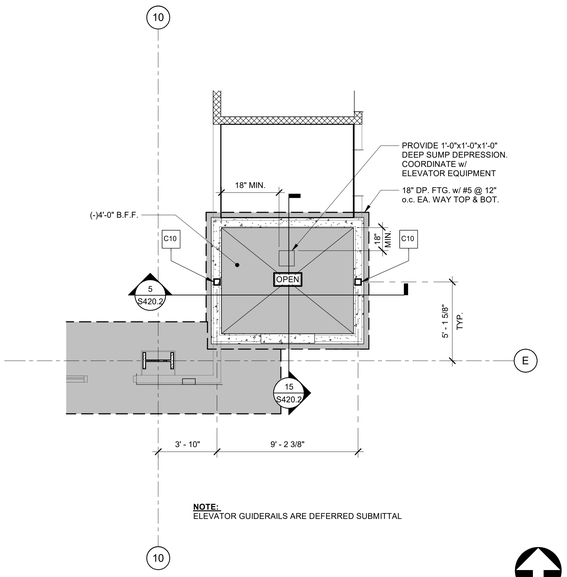

NOTE:
ELEVATOR GUIDERAILS ARE DEFERRED SUBMITTAL

NORTH

PARTIAL ENLARGED FOUNDATION PLAN 1/4" = 1'-0" | 2

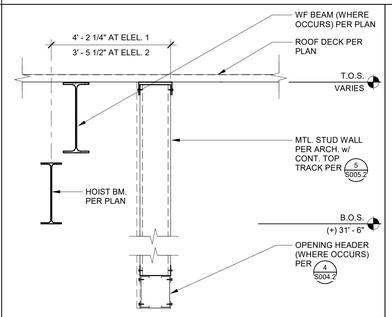

ELEVATOR DETAIL AT OPENING 1" = 1'-0" | 18

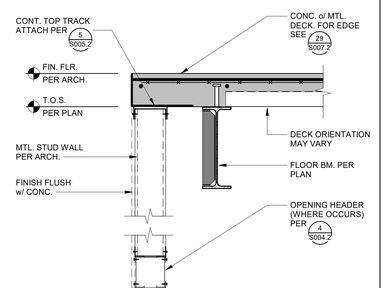

ELEVATOR DETAIL AT OPENING 1" = 1'-0" | 19

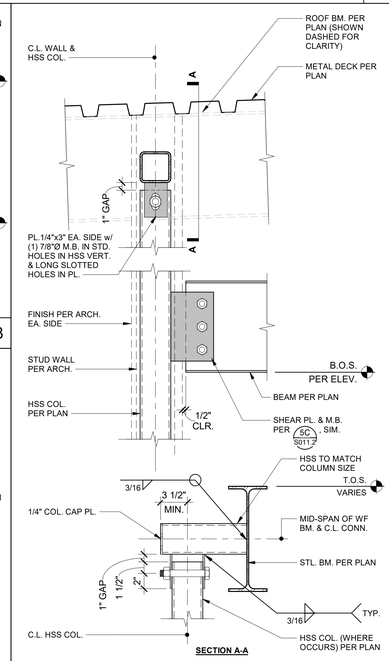

SECTION A-A

HOIST BEAM CONNECTION 1 1/2" = 1'-0" | 14

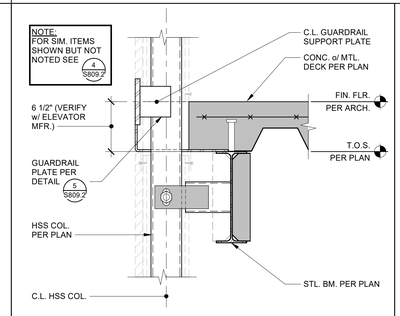

ELEVATOR GUARDRAIL SUPPORT 1 1/2" = 1'-0" | 8

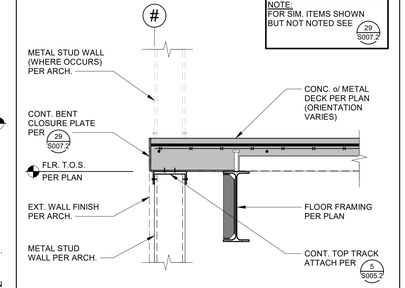

ELEVATOR DETAIL 1" = 1'-0" | 9

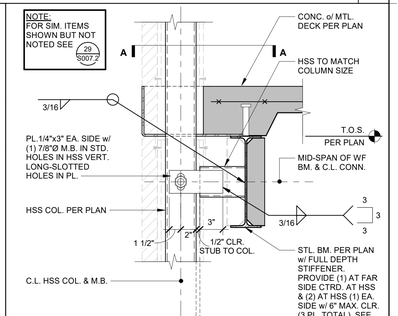

ELEVATOR GUARDRAIL SUPPORT 1 1/2" = 1'-0" | 4

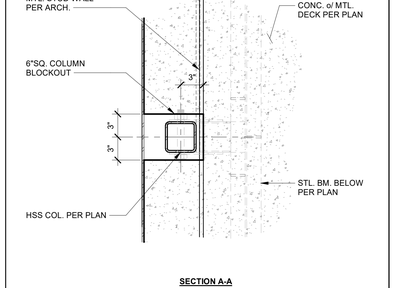

SECTION A-A

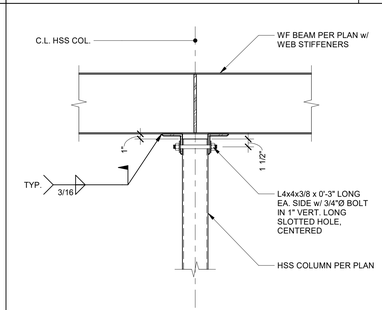

TOP OF HSS COLUMN TO WF BEAM 1" = 1'-0" | 15

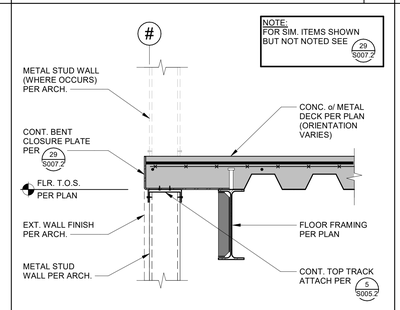

ELEVATOR DETAIL 1" = 1'-0" | 10

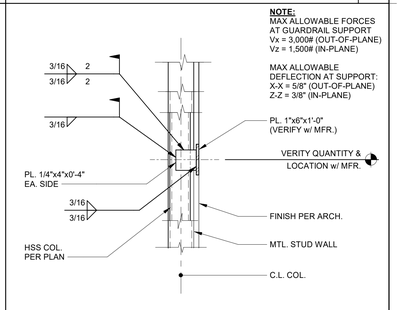

ELEVATOR GUARDRAIL SUPPORT 1" = 1'-0" | 5

IDENTIFICATION STAMP
DIV. OF THE STATE ARCHITECT
APP: 02-122821 INC: 2
REVIEWED FOR
SS ☑ FLS ☑ ACS ☑
DATE: 11/20/2025

Teter, Inc. expressly reserves its common law copyright and other property rights in these plans. This document, the ideas and designs incorporated herein, as an instrument of professional service, is not to be used in whole or part, for any other project without prior written authorization.

MARK	DATE	DESCRIPTION
A	11/13/2025	DSA BACKCHECK

REGISTERED PROFESSIONAL ENGINEER LUIS A. VALTIERRA No. 35609 STRUCTURAL STATE OF CALIFORNIA

TETER, INC.
FRESNO HEADQUARTERS
VISALIA | BAKERSFIELD | MODESTO | SAN LUIS OBISPO
ARCHITECTS ENGINEERS CONNECTED

VISALIA CAMPUS UNIVERSITY CENTER
COLLEGE OF THE SEQUOIAS
915 S. MOONEY BLVD
VISALIA, CALIFORNIA

DRAWING TITLE
ENLARGED ELEVATOR PLAN & DETAILS

PROJECT NO.
22-12498

DRAWING
S809.2

PLOT DATE: 11/12/2025 7:28:40 PM

\\tetr-file1\Users\luis.valtierra\Documents\12498-S-UC_luis.valtierra.rvt

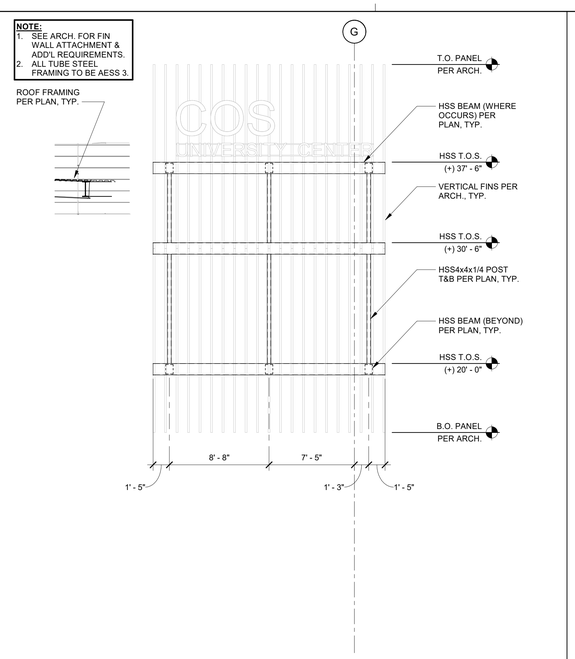

ELEVATION - WEST FIN WALL 3/16" = 1'-0" | 22

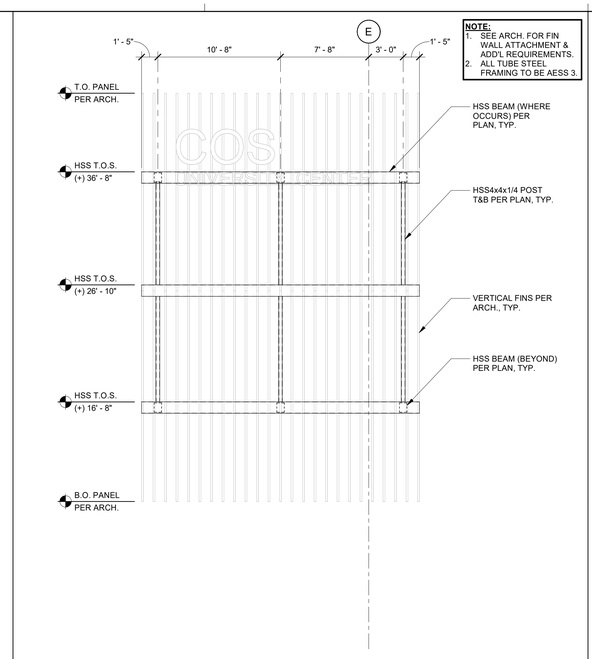

ELEVATION - EAST FIN WALL 3/16" = 1'-0" | 17

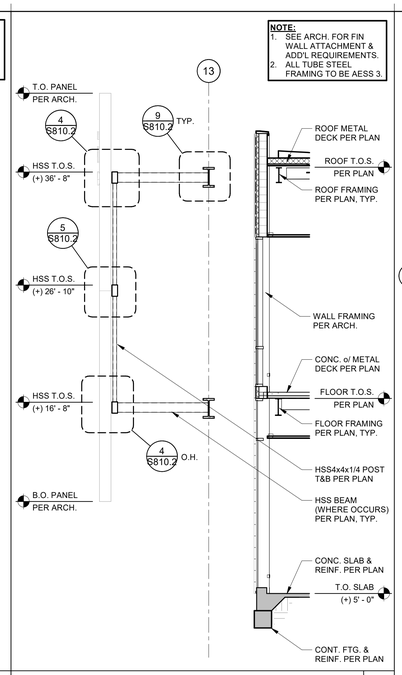

SECTION - EAST FIN WALL 3/16" = 1'-0" | 12

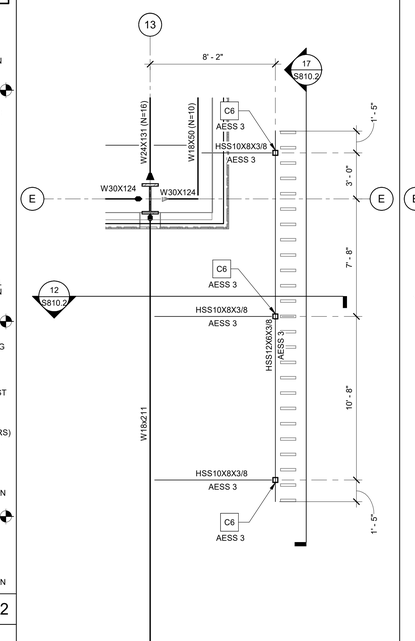

ENLARGED FLOOR FRAMING PLAN 1/4" = 1'-0" | 8

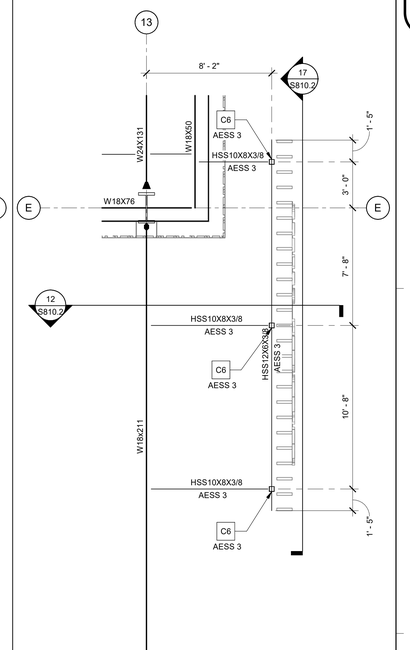

ENLARGED ROOF FRAMING PLAN 1/4" = 1'-0" | 3

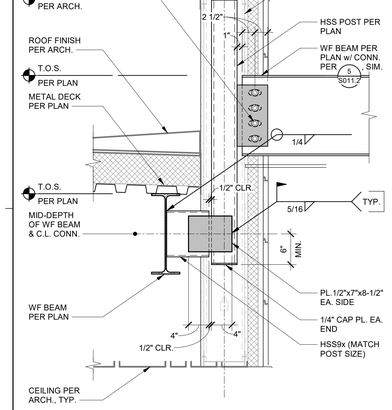

DETAIL 1" = 1'-0" | 29

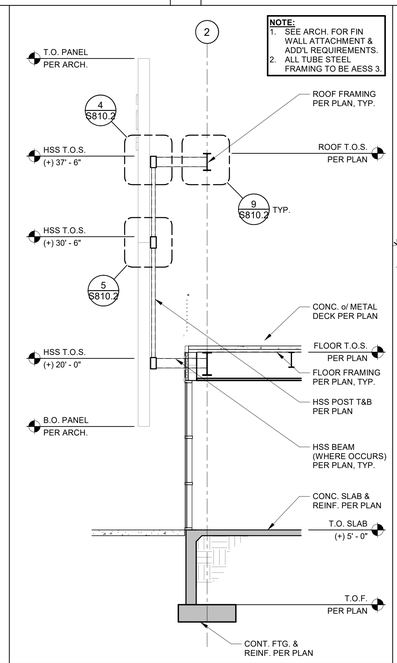

SECTION - WEST FIN WALL 3/16" = 1'-0" | 24

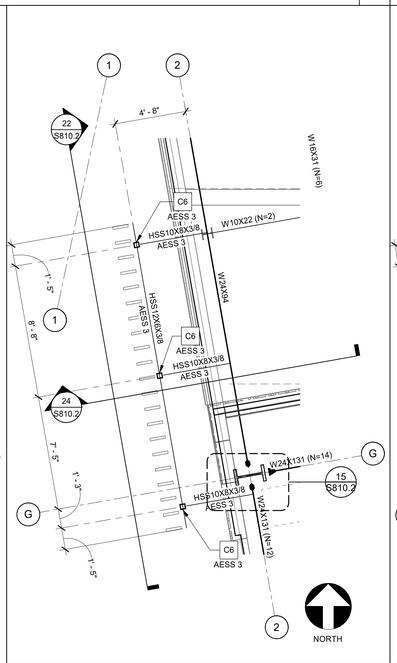

ENLARGED FLOOR FRAMING PLAN 1/4" = 1'-0" | 19

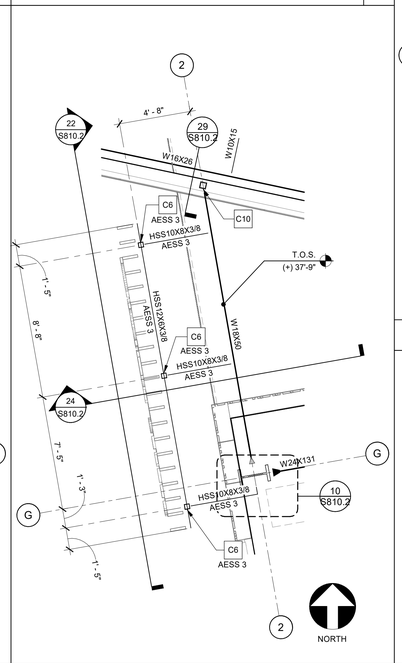

ENLARGED ROOF FRAMING PLAN 1/4" = 1'-0" | 14

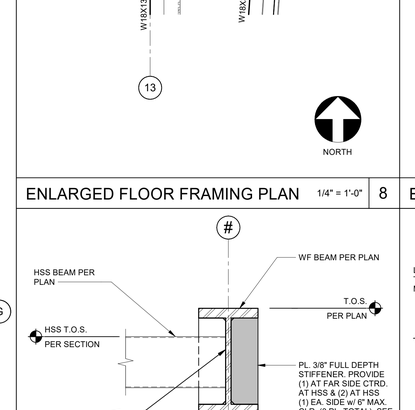

FIN WALL DETAIL 1" = 1'-0" | 10

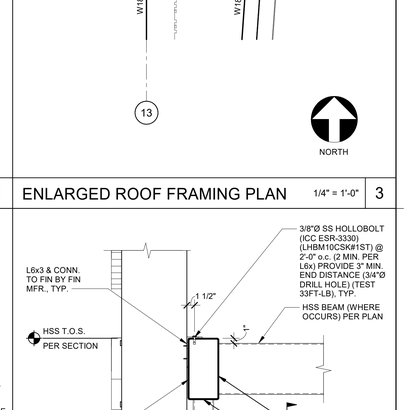

FIN WALL DETAIL 1" = 1'-0" | 4

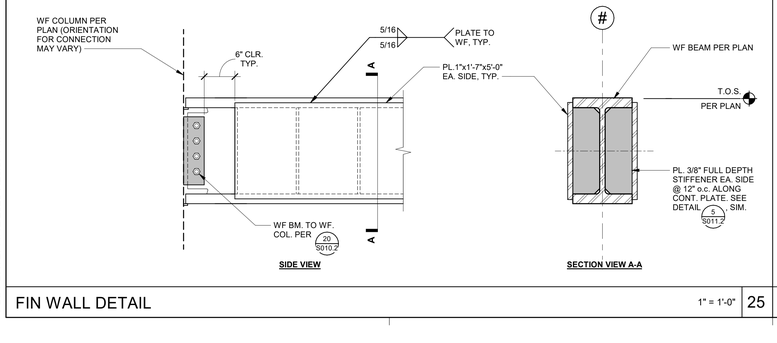

FIN WALL DETAIL 1" = 1'-0" | 25

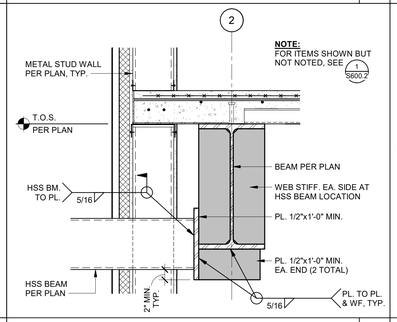

FIN WALL DETAIL 1" = 1'-0" | 20

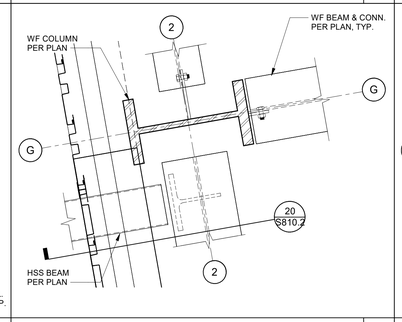

ENLARGED FLOOR FRAMING PLAN 1" = 1'-0" | 15

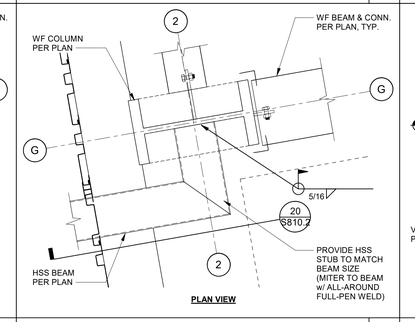

FIN WALL DETAIL 1" = 1'-0" | 10

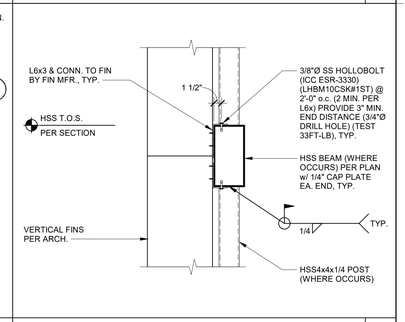

FIN WALL DETAIL 1" = 1'-0" | 5

IDENTIFICATION STAMP
DIV. OF THE STATE ARCHITECT
APP: 02-122821 INC: 2
REVIEWED FOR
SS ☑ FLS ☑ ACS ☑
DATE: 11/20/2025

Teter, Inc. expressly reserves its common law copyright and other property rights in these plans. This document, the ideas and designs incorporated herein, as an instrument of professional service, is not to be used in whole or in part, for any other project without prior written authorization.

MARK	DATE	DESCRIPTION
A	11/13/2025	DSA BACKCHECK

REGISTERED PROFESSIONAL ENGINEER E. S. BAILEY No. 55629 STRUCTURAL STATE OF CALIFORNIA

TETER, INC.
ARCHITECTS ENGINEERS CONNECTED
FRESNO HEADQUARTERS
VISALIA | BAKERSFIELD | MODESTO | SAN LUIS OBISPO

VISALIA CAMPUS UNIVERSITY CENTER
COLLEGE OF THE SEQUOIAS
915 S. MOONEY BLVD
VISALIA, CALIFORNIA

DRAWING TITLE
MISCELLANEOUS FRAMING & DETAILS

PROJECT NO.
22-12498

DRAWING
S810.2

PLOT DATE: 11/12/2025 7:28:57 PM

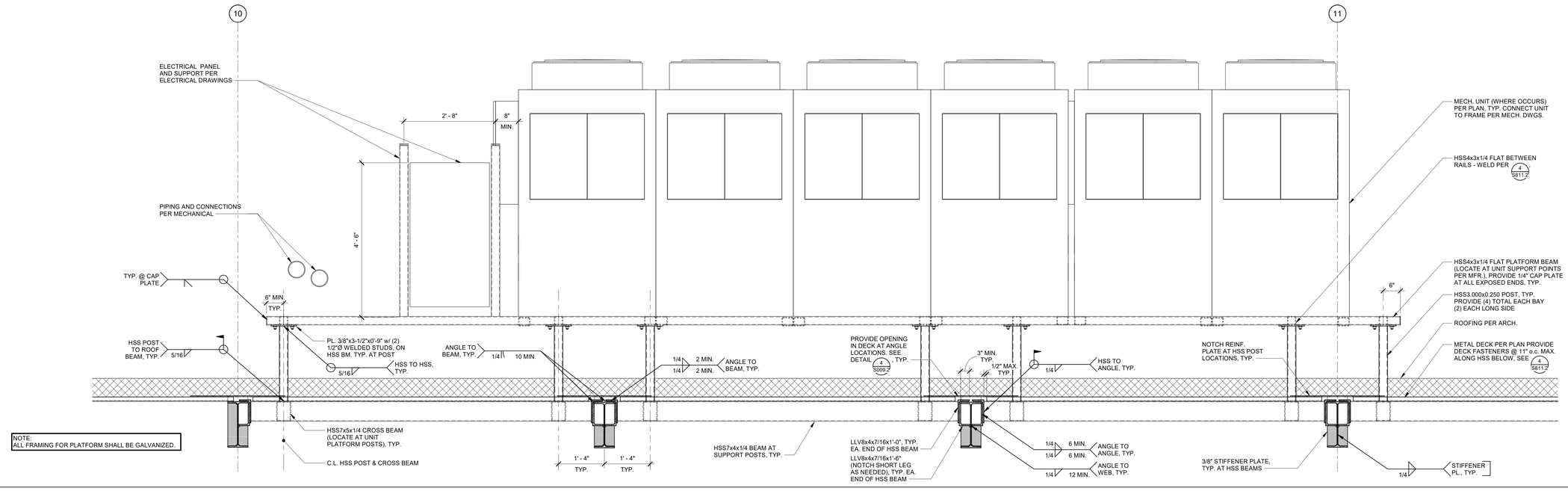

NOTE:
ALL FRAMING FOR PLATFORM SHALL BE GALVANIZED.

PLATFORM FRAMING 3/4" = 1'-0" 2

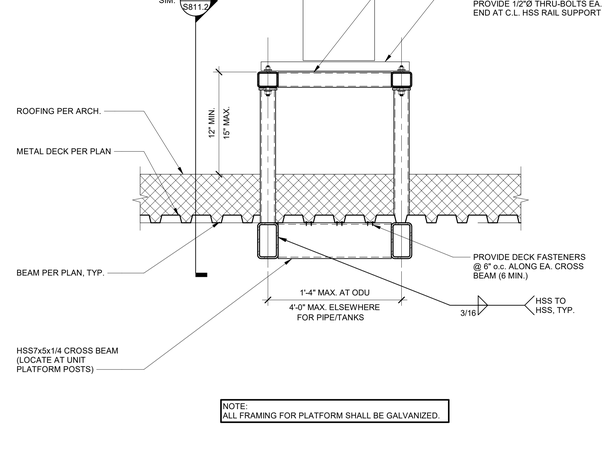

NOTE:
ALL FRAMING FOR PLATFORM SHALL BE GALVANIZED.

PLATFORM FRAMING 1" = 1'-0" 14

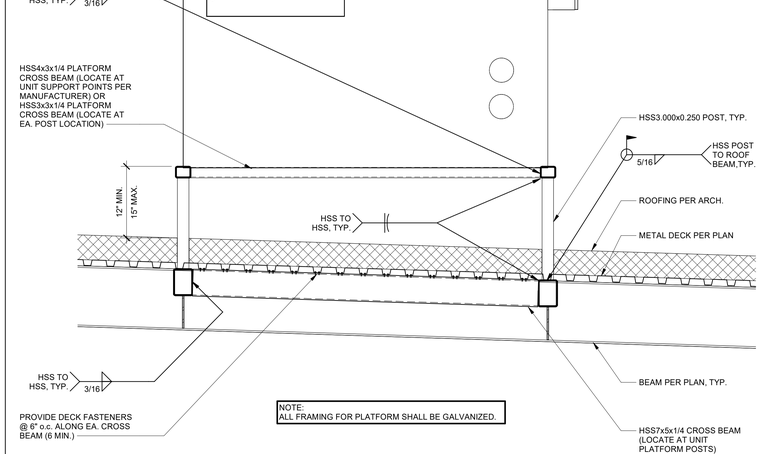

NOTE:
ALL FRAMING FOR PLATFORM SHALL BE GALVANIZED.

PLATFORM FRAMING 3/4" = 1'-0" 4

IDENTIFICATION STAMP
DIV. OF THE STATE ARCHITECT
APP: 02-122821 INC: 2
REVIEWED FOR
SS ☑ FLS ☑ ACS ☑
DATE: 11/20/2025

Teter, Inc. expressly reserves its common law copyright and other property rights in these plans. This document, the ideas and designs incorporated herein, as an instrument of professional service, is not to be used in whole or in part, for any other project without prior written authorization.

MARK	DATE	DESCRIPTION
A	11/13/2025	DSA BACKCHECK

REGISTERED PROFESSIONAL ENGINEER STRUCTURAL STATE OF CALIFORNIA S. BAILEY No. 55689 12-31-26

TETER, INC.
FRESNO HEADQUARTERS
VISALIA | BAKERSFIELD | MODESTO | SAN LUIS OBISPO
ARCHITECTS ENGINEERS CONNECTED

VISALIA CAMPUS UNIVERSITY CENTER
COLLEGE OF THE SEQUOIAS
915 S. MOONEY BLVD
VISALIA, CALIFORNIA

DRAWING TITLE
MISCELLANEOUS FRAMING & DETAILS

PROJECT NO.
22-12498

DRAWING
S811.2

\\tetr-file1\Users\luis.valtierra\Documents\12498-S-UC_luis.valtierra.rvt
PLOT DATE: 11/12/2025 7:29:03 PM

\\tetr-file1\Users\luis.valtierra\Documents\12498-S-UC_luis.valtierra.rvt

NOTE:
METAL DECK NOT SHOWN
FOR CLARITY

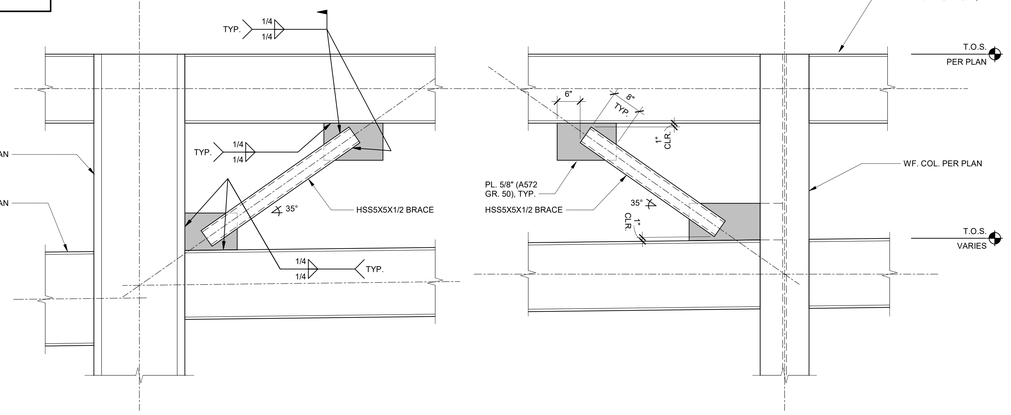

ROOF BRACE FRAMING DETAIL — 3/4" = 1'-0" — 17

NOTE:
METAL DECK NOT SHOWN
FOR CLARITY

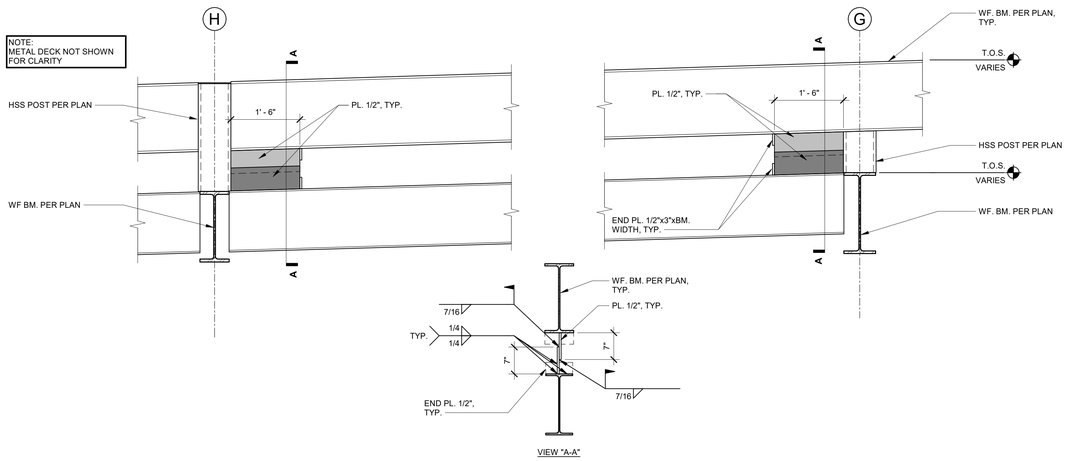

ROOF FRAMING DETAIL — 3/4" = 1'-0" — 18

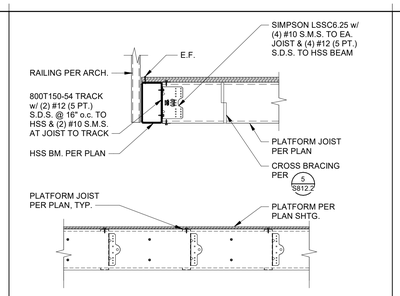

FLOOR JOIST FRAMING — 1" = 1'-0" — 11

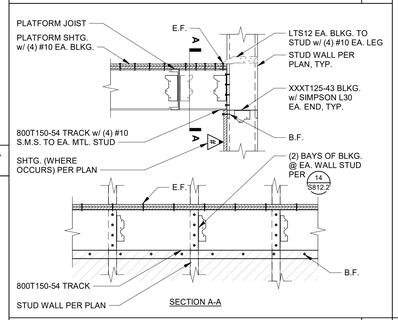

FLOOR JOIST FRAMING — 1" = 1'-0" — 12

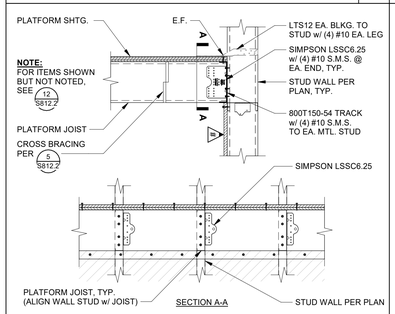

FLOOR JOIST FRAMING — 1" = 1'-0" — 13

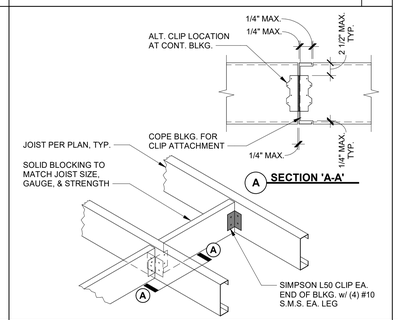

SOLID BLOCKING AT JOISTS — 1" = 1'-0" — 14

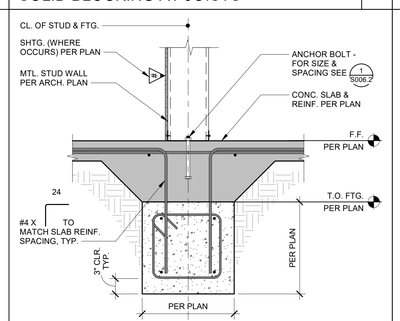

INT. SHEAR WALL FOOTING — 1" = 1'-0" — 15

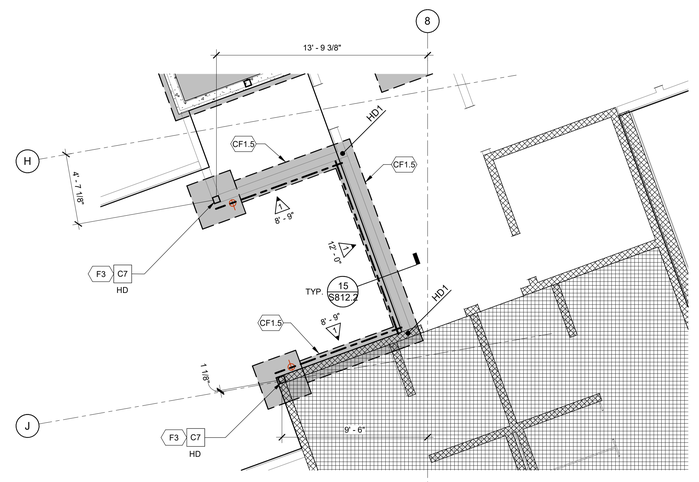

LEGEND

- HD1 — INDICATES HOLDOWN PER 13/S006.2
- INDICATES METAL STUD WALL PER ARCH.
- A — INDICATES SHEAR WALL - FOR SHEATHING SEE 1/S006.2
- 4' - 0" — INDICATES REQUIRED SHEAR WALL LENGTH. OVERALL WALL LENGTH SHALL BE CONTROLLED BY ARCH. DIMS.
- CX / HD — COLUMN TAG. SEE COLUMN SCHEDULE FOR ADDITIONAL INFORMATION.
- INDICATES COLUMN AS SHEAR WALL HOLDOWN (WHERE OCCURS), SEE 20/S006.2
- NORTH

NOTE:
FOR SYMBOLS SHOWN BUT NOT LISTED HERE, SEE SHEET S100.2

PARTIAL ENLARGED FOUNDATION PLAN — 1/4" = 1'-0" — 2

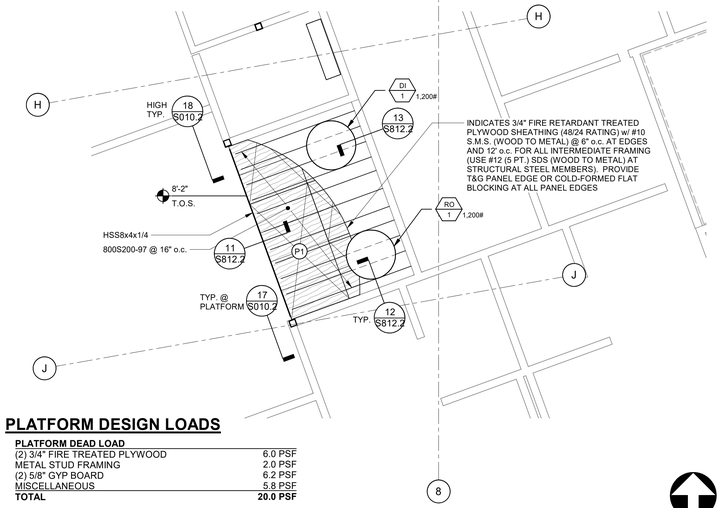

PLATFORM DESIGN LOADS

PLATFORM DEAD LOAD	
(2) 3/4" FIRE TREATED PLYWOOD	6.0 PSF
METAL STUD FRAMING	2.0 PSF
(2) 5/8" GYP BOARD	6.2 PSF
MISCELLANEOUS	5.8 PSF
TOTAL	**20.0 PSF**
PLATFORM LIVE LOAD	
LIVE LOAD	60.0 PSF

PARTIAL ENLARGED MECHANICAL PLATFORM FRAMING PLAN — 1/4" = 1'-0" — 4

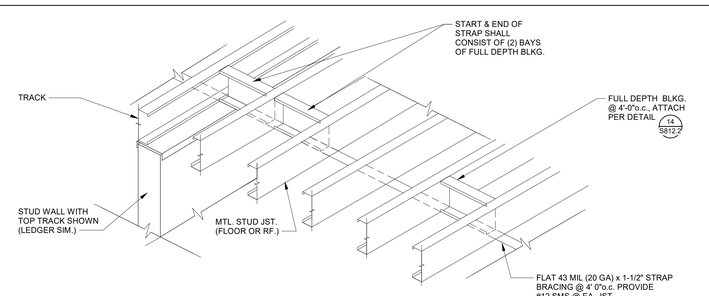

JOIST BLOCKING — 1" = 1'-0" — 5

PLOT DATE: 11/12/2025 7:29:04 PM

IDENTIFICATION STAMP
DIV. OF THE STATE ARCHITECT
APP: 02-122821 INC: 2
REVIEWED FOR
SS ☑ FLS ☑ ACS ☑
DATE: 11/20/2025

Teter, Inc. expressly reserves its common law copyright and other property rights in these plans. This document, the ideas and designs incorporated herein, as an instrument of professional service, is not to be used in whole or part, for any other project without prior written authorization.

MARK	DATE	DESCRIPTION
A	11/13/2025	DSA BACKCHECK

REGISTERED PROFESSIONAL ENGINEER — LUIS A. BALTIERRA — No. 95636 — STRUCTURAL — STATE OF CALIFORNIA

TETER, INC.
ARCHITECTS ENGINEERS CONSULTANTS
FRESNO HEADQUARTERS
VISALIA | BAKERSFIELD | MODESTO | SAN LUIS OBISPO

VISALIA CAMPUS UNIVERSITY CENTER
COLLEGE OF THE SEQUOIAS
915 S. MOONEY BLVD
VISALIA, CALIFORNIA

DRAWING TITLE
MISCELLANEOUS FRAMING & DETAILS

PROJECT NO.
22-12498

DRAWING
S812.2

\\tet-file1\Users\matt.soderstrom_TETR\Documents\12498-P-UC_matt.soderstrom.rvt

GENERAL NOTES

1. COORDINATION OF WORK: LAYOUT OF MATERIALS, EQUIPMENT AND SYSTEMS IS GENERALLY DIAGRAMMATIC UNLESS SPECIFICALLY DIMENSIONED. SOME WORK MAY BE SHOWN OFFSET FOR CLARITY.
2. THE ACTUAL LOCATION OF ALL MATERIALS, PIPING, DUCTWORK, FIXTURES, EQUIPMENT, SUPPORTS, ETC. SHALL BE CAREFULLY PLANNED, PRIOR TO INSTALLATION OF ANY WORK TO AVOID ALL INTERFERENCES WITH EACH OTHER, OR WITH STRUCTURAL, ELECTRICAL, ARCHITECTURAL OR OTHER ELEMENTS.
3. VERIFY THE PROPER VOLTAGE AND PHASE OF ALL EQUIPMENT WITH THE ELECTRICAL PLANS. ALL CONFLICTS SHALL BE CALLED TO THE ATTEN TION OF THE ARCHITECT AND THE ENGINEER PRIOR TO THE INSTALLATION OF ANY WORK OR THE ORDERING OF ANY EQUIPMENT.
4. ALL DRAWINGS AND SPECIFICATIONS ARE TO BE CONSIDERED PART OF THE CONTRACT DOCUMENTS. THE CONTRACTOR SHALL BE RESPONSIBLE FOR THE REVIEW AND COORDINATION OF ALL DRAWINGS PRIOR TO ANY CONSTRUCTION, INCLUDING ARCHITECTURAL, STRUCTURAL, MECHANICAL, PLUMBING, AND ELECTRICAL. ANY WORK PERFORMED IN CONFLICT WITH THE CONTRACT DOCUMENTS OR ANY CODE REQUIREMENT SHALL BE CORRECTED BY THE CONTRACTOR AT HIS OWN EXPENSE AND AT NO EXPENSE TO THE OWNER OR THE OWNER REPRESENTATIVE.
5. MINIMUM SLOPE FOR SEWER IS 1/4"PER FT, UNLESS OTHERWISE NOTED.
6. ALL ROOF PENETRATIONS SHALL BE COMPATIBLE WITH ROOF SYSTEM WITH AS FEW PENETRATIONS AS POSSIBLE.
7. MINIMUM DOMESTIC WATER PIPE SIZE TO BE 3/4" UNLESS OTHERWISE NOTED. USE A REDUCING ELL AT FIXTURE, IF NECESSARY.
8. ALL PLUMBING FIXTURES, VALVES, FAUCETS, FIXTURE STOPS, ETC. WHICH PROVIDE WATER FOR HUMAN CONSUMPTION MUST MEET THE "LEAD FREE" REQUIREMENT FOR THE STATE OF CALIFORNIA.
9. MAXIMUM ALLOWABLE DISTANCE FOR HOT WATER LATERALS TO FIXTURES OFF OF THE CIRCULATING MAIN SHALL BE 10'-0" FOR HAND WASH SINKS AND LAVS, AND 15'-0" FOR OTHER SINKS.

ANCHORAGE & BRACING NOTES

MEP COMPONENT ANCHORAGE NOTE

ALL MECHANICAL, PLUMBING AND ELECTRICAL COMPONENTS SHALL BE ANCHORED AND INSTALLED PER THE DETAILS ON THE DSA APPROVED CONSTRUCTION DOCUMENTS. THE FOLLOWING COMPONENTS SHALL BE ANCHORED OR BRACED TO MEET THE FORCE AND DISPLACEMENT REQUIREMENTS PRESCRIBED IN THE 2022 CBC, SECTIONS 1617A.1.18 THROUGH 1617A.1.26 AND ASCE 7-16 CHAPTERS 13, 26, AND 30:

1. ALL PERMANENT EQUIPMENT AND COMPONENTS.
2. TEMPORARY, MOVABLE OR MOBILE EQUIPMENT THAT IS PERMANENTLY ATTACHED (E.G. HARD WIRED) TO THE BUILDING UTILITY SERVICES SUCH AS ELECTRICITY, GAS OR WATER. "PERMANENTLY ATTACHED" SHALL INCLUDE ALL ELECTRICAL CONNECTIONS EXCEPT FOR 110/220 VOLT RECEPTACLES HAVING A FLEXIBLE CABLE.
3. TEMPORARY, MOVABLE OR MOBILE EQUIPMENT WHICH IS HEAVIER THAN 400 POUNDS OR HAS A CENTER OF MASS LOCATED 4 FEET OR MORE ABOVE THE ADJACENT FLOOR OR ROOF LEVEL THAT DIRECTLY SUPPORT THE COMPONENT IS REQUIRED TO BE RESTRAINED IN A MANNER APPROVED BY DSA.

THE FOLLOWING MECHANICAL AND ELECTRICAL COMPONENTS SHALL BE POSITIVELY ATTACHED TO THE STRUCTURE, BUT NEED NOT DEMONSTRATE DESIGN COMPLIANCE WITH THE REFERENCES NOTED ABOVE. THESE COMPONENTS SHALL HAVE FLEXIBLE CONNECTIONS PROVIDED BETWEEN THE COMPONENT AND ASSOCIATED DUCTWORK, PIPING, AND CONDUIT. FLEXIBLE CONNECTIONS MUST ALLOW MOVEMENT IN BOTH TRANSVERSE AND LONGITUDINAL DIRECTIONS:

A. COMPONENTS WEIGHING LESS THAN 400 POUNDS AND HAVE A CENTER OF MASS LOCATED 4 FEET OR LESS ABOVE THE ADJACENT FLOOR OR ROOF LEVEL THAT DIRECTLY SUPPORT THE COMPONENT.
B. COMPONENTS WEIGHING LESS THAN 20 POUNDS, OR IN THE CASE OF DISTRIBUTED SYSTEMS, LESS THAN 5 POUNDS PER FOOT, WHICH ARE SUSPENDED FROM A ROOF OR FLOOR OR HUNG FROM A WALL.

THE ANCHORAGE OF ALL MECHANICAL, ELECTRICAL AND PLUMBING COMPONENTS SHALL BE SUBJECT TO THE APPROVAL OF THE DESIGN PROFESSIONAL IN GENERAL RESPONSIBLE CHARGE OR STRUCTURAL ENGINEER DELEGATED RESPONSIBILITY AND ACCEPTANCE BY DSA. THE PROJECT INSPECTOR WILL VERIFY THAT ALL COMPONENTS AND EQUIPMENT HAVE BEEN ANCHORED IN ACCORDANCE WITH ABOVE REQUIREMENTS.

PIPING, DUCTWORK, AND ELECTRICAL DISTRIBUTION SYSTEM BRACING NOTE

PIPING, DUCTWORK, AND ELECTRICAL DISTRIBUTION SYSTEMS SHALL BE BRACED TO COMPLY WITH THE FORCES AND DISPLACEMENTS PRESCRIBED IN ASCE 7 SECTION 13.3 AS DEFINED IN ASCE 7 SECTIONS 13.6.5, 13.6.6, 13.6.7, 13.6.8; AND 2022 CBC, SECTIONS 1617A.1.24, 1617A.1.25 AND 1617A.1.26.

THE METHOD OF SHOWING BRACING AND ATTACHMENTS TO THE STRUCTURE FOR THE IDENTIFIED DISTRIBUTION SYSTEM ARE AS NOTED BELOW. THE MEP DESIGN PROFESSIONAL ENGINEER RESPONSIBLE FOR CONTENT ON THESE SHEETS HAS VERIFIED THAT THE DESIGN METHODS IDENTIFIED BELOW ARE IN ACCORDANCE WITH DSA IR 16-13.

MECHANICAL PIPING (MP), MECHANICAL DUCTS (MD), PLUMBING PIPING (PP), ELECTRICAL DISTRIBUTION SYSTEMS (E):

MP ☐ MD ☐ PP ☒ E ☐ - OPTION 1: PROJECT-SPECIFIC DESIGN.

MP ☐ MD ☐ PP ☐ E ☐ - OPTION 2: DESIGN BASED ON OSHPD OPM, WITHIN PROJECT SUBMITTAL.

MP ☐ MD ☐ PP ☐ E ☐ -OPTION 3: DESIGN BASED ON OSHPD OPM, WITHIN PROJECT SUBMITTAL.

TITLE 24 ACCEPTANCE TESTING

THE CALIFORNIA ENERGY CODE SECTION 10-103 REQUIRES ACCEPTANCE TESTING ON ALL NEWLY INSTALLED LIGHTING CONTROLS, MECHANICAL SYSTEMS, ENVELOPES, AND PROCESS EQUIPMENT AFTER INSTALLATION AND BEFORE PROJECT COMPLETION. AN ACCEPTANCE TEST IS A FUNCTIONAL PERFORMANCE TEST TO HELP ENSURE THAT NEWLY INSTALLED EQUIPMENT IS OPERATING AND IN COMPLIANCE WITH THE ENERGY CODE.

LIGHTING CONTROLS ACCEPTANCE TESTS MUST BE PERFORMED BY A CERTIFIED LIGHTING CONTROLS ACCEPTANCE TEST TECHNICIAN (ATT).

MECHANICAL SYSTEMS ACCEPTANCE TESTS MUST BE PERFORMED BY A CERTIFIED MECHANICAL ATT FOR PROJECTS SUBMITTED ON OR AFTER OCTOBER 1, 2021.

ENVELOPE AND PROCESS EQUIPMENT ACCEPTANCE TESTS SHALL BE PERFORMED BY THE INSTALLING CONTRACTOR, ENGINEER/ARCHITECT OF RECORD, OR THE OWNER'S AGENT.

A LISTING OF CERTIFIED ATT CAN BE FOUND AT: https://www.energy.ca.gov/programs-and-topics/programs/acceptance-test-technician-certification-provider-program/acceptance.

THE ACCEPTANCE TESTING PROCEDUERS MUST BE REPEATED, AND DEFICIENCIES MUST BE CORRECTED BY THE BUILDER OR INSTALLING CONTRACTOR UNTIL THE CONSTRUCTION/INSTALLATION OF THE SPECIFIED SYSTEMS CONFORM AND PASS THE REQUIRED ACCEPTANCE CRITERIA.

PROJECT INSPECTORS WILL COLLECT THE FORMS TO CONFIRM THAT THE REQUIRED ACCEPTANCE TESTS HAVE BEEN COMPLETED.

GAS PIPE SIZING

CPC 2022 TABLE 1215.2(1)

DELIVERY PRESSURE:	7" W.C.
GAS LOAD:	310 MBH
LONGEST LENGTH:	300 FEET

PLUMBING LEGEND

SYMBOL	ITEM	ABBR.
	ABOVE	ABV
	ABOVE CEILING	ABV CLG
	ABOVE FINISHED FLOOR	AFF
	ALTERNATE	ALT
&	AND	
	ARCHITECT / ARCHITECTURAL	ARCH
@	AT	
	BELOW FLOOR	BEL FLR
	BELOW GRADE	BEL GR
	CALIFORNIA MECHANICAL CODE	CMC
	CALIFORNIA PLUMBING CODE	CPC
	CEILING	CLG
℄	CENTER LINE	
⟅	CONTINUATION	CONT
	CUBIC FEET PER HOUR	CFH
∅	DIAMETER	DIA
	DOWN	DN
	DRAWING	DWG
	ELBOW	ELL
	ELECTRICAL	ELEC
	EXISTING	(E)
	FEET	FT
	FLOOR	FLR
	FLOW LINE	FL
	GALLON	GAL
	GALLONS PER HOUR	GPH
	GALLONS PER MINUTE	GPM
	GAUGE	GA
	INSIDE DIAMETER	ID
	INVERT ELEVATION	I.E.
	MAXIMUM	MAX
	MINIMUM	MIN
	NEW	(N)
	NOT IN CONTRACT	NIC
	NOT TO SCALE	NTS
#	NUMBER	NO.
	OUTSIDE DIAMETER	OD
	POUNDS	LBS
	POUNDS PER SQUARE INCH	PSI
	POUNDS PER SQUARE INCH ABSOLUTE	PSIA
	POUNDS PER SQUARE INCH GAUGE	PSIG
	POLYVINYL CHLORIDE	PVC
	ROOM	RM
	SPECIFICATION	SPEC
	SQUARE FEET	SQ FT
	STAINLESS STEEL	SS
	TEMPERATURE	TEMP
	THROUGH	THRU
	TYPICAL	(TYP)
	UNDER GROUND	U/G
	WATER COLUMN	WC
	WITH	W/
	WITHOUT	W/O
—A—	COMPRESSED AIR	A
—AV—	ACID VENT	AV
—AW—	ACID WASTE	AW
	ACID VENT RISER	AVR
	ACID VENT THRU ROOF	AVTR
—CD—	CONDENSATE DRAIN	CD
— – —	DOMESTIC COLD WATER	CW
— – – —	DOMESTIC HOT WATER	HW
— – – – —	DOMESTIC HOT WATER RETURN	HWR
—DI—	DE-IONIZED WATER	DI
—RO—	REVERSE OSMOSIS TREATED WATER	RO
—G—	LOW PRESSURE NATURAL GAS	G
—HPG—	HIGH PRESSURE GAS	HPG
—RWL—	RAIN WATER LEADER	RWL
—OD—	OVERFLOW DRAIN	OD
—SD—	STORM DRAIN	SD
———	SOIL or WASTE	S or W
—C2H2—	ACETYLENE GAS	C2H2
—AR—	ARGON GAS	AR
—HE—	HELIUM GAS	HE
—H—	HYDROGEN GAS (NON-INERT)	H
—H2—	INERT HYDROGEN GAS	H2
—N2—	NITROGEN GAS	N2
—N2O—	NITROUS OXIDE GAS	N2O
—P5—	P5 LABORATORY GAS	P5
—VAC—	VACUUM	VAC
– – – – –	VENT	V
	VENT RISER	VR
	VENT THRU ROOF	VTR
	CLEANOUT TO GRADE	COTG
	DEMOLITION	DEMO
– – – –	EXISTING PIPING	
	FLOOR CLEANOUT	FCO
	HOSE BIBB	
	PIPING TURN UP	
	PIPING TURN DOWN	
	PIPING CAP	
	POINT OF CONNECTION TO EXISTING	POC

SYMBOL	ITEM	ABBR.
	ANGLE VALVE	
	BALANCE VALVE	
	BALL VALVE	
	CHECK VALVE	
	CONCENTRIC REDUCER	
	TWO-WAY CONTROL VALVE	
	PLUG VALVE	
	PRESSURE REDUCING VALVE	
	SHUT-OFF VALVE IN BOX	SOV
	SHUT-OFF VALVE	SOV
	THERMOSTATIC MIXING VALVE	
	TEMPERATURE / PRESSURE RELIEF VALVE	PRV
	UNION	
	WALL CLEANOUT	WCO
	"Y" TYPE STRAINER	
P	PRESSURE GAUGE	
T	TEMPERATURE GAUGE	
1	KEYNOTE	
2 / P202	DETAIL REFERENCE EXAMPLE: DETAIL 2, SHEET P202	
3 / P400	SECTION REFERENCE EXAMPLE: SECTION 3, SHEET P400	

PLUMBING SHEET INDEX

P001.2	PLUMBING SCHEDULES, LEGENDS, AND NOTES
P002.2	PLUMBING SCHEDULES
P100.2	PROPOSED PLUMBING SITE PLAN
P101.2	ENLARGED PLUMBING DEMOLITION SITE PLAN
P200.2	OVERALL PLUMBING FLOOR PLAN - FIRST FLOOR BEL. GRADE
P201.2	OVERALL PLUMBING FLOOR PLAN - FIRST FLOOR ABV. CEILING
P210.2	OVERALL PLUMBING FLOOR PLAN - SECOND FLOOR
P300.2	ENLARGED PLUMBING FLOOR PLANS - RESTROOMS SEWER & VENT
P301.2	ENLARGED PLUMBING FLOOR PLANS - RESTROOMS DOMESTIC COLD & HOT WATER
P302.2	ENLARGED PLUMBING FLOOR PLANS - RESTROOMS SEWER & VENT
P303.2	ENLARGED PLUMBING FLOOR PLANS - RESTROOMS DOMESTIC COLD & HOT WATER
P304.2	ENLARGED PLUMBING FLOOR PLAN - LECTURE AREA BEL. GR. SEWER, VENT, DOMESTIC COLD & HOT WATER, AND LAB PIPING
P305.2	ENLARGED PLUMBING FLOOR PLAN - LECTURE AREA ABV. CLG. SEWER & VENT
P306.2	ENLARGED PLUMBING FLOOR PLAN - LECTURE AREA ABV. CLG. DOMESTIC COLD & HOT WATER
P307.2	ENLARGED PLUMBING FLOOR PLAN - LECTURE AREA ABV. CLG. LAB PIPING AND GAS
P308.2	ENLARGED PLUMBING FLOOR PLAN - LAB AREA ABV. FLR. SEWER & VENT
P309.2	ENLARGED PLUMBING FLOOR PLAN - LAB AREA ABV. FLR. DOMESTIC COLD & HOT WATER
P310.2	ENLARGED PLUMBING FLOOR PLAN - LAB AREA ABV. FLR. LAB PIPING
P500.2	PLUMBING ROOF PLAN
P800.2	PLUMBING DETAILS
P801.2	PLUMBING DETAILS
P802.2	PLUMBING DETAILS
P900.2	TITLE 24 DOCUMENTATION

PLOT DATE: 8/29/2025 12:04:54 PM

IDENTIFICATION STAMP
DIV. OF THE STATE ARCHITECT
APP: 02-122821 INC: 2
REVIEWED FOR
SS ☑ FLS ☑ ACS ☑
DATE: 11/20/2025

Teter, Inc. expressly reserves its common law copyright and other property rights in these plans. This document, the ideas and designs incorporated herein, as an instrument of professional service, is not to be used in whole or in part, for any other project without prior written authorization.

MARK	DATE	DESCRIPTION
A	11/13/2025	DSA BACKCHECK

TETER, INC.
FRESNO HEADQUARTERS
VISALIA | BAKERSFIELD | MODESTO | SAN LUIS OBISPO
ARCHITECTS ENGINEERS CONNECTED

VISALIA CAMPUS UNIVERSITY CENTER
COLLEGE OF THE SEQUOIAS
915 S. MOONEY BLVD
VISALIA, CALIFORNIA

DRAWING TITLE
PLUMBING SCHEDULES, LEGENDS, AND NOTES

PROJECT NO.
22-12498

DRAWING
P001.2

PLUMBING SCHEDULE

MARK	FIXTURE	CONNECTION SIZES S or W	V	CW	HW	DESCRIPTION
WC-1	WATER CLOSET ADA	4"	2"	1"	-----	KOHLER K-96057, HIGHCLIFF ULTRA 1.28 GPF, FLOOR MOUNTED, 17-3/4" TOP OF SEAT HEIGHT, ELONGATED BOWL, ZURN Z6000AV-HET AQUA ADVANTAGE WITH TRIPLE FILTERED DIAPHRAGM, 1.28 GPF FLUSH VALVE WITH MANUAL LEVER HANDLE, CHURCH 9500SSCT SOLID PLASTIC OPEN FRONT SEAT WITH STAINLESS STEEL HINGE POSTS, SELF-SUSTAINING HINGES AND STA-TITE FASTENING SYSTEM, FLUSH VALVE HANDLE SHALL POINT TO THE WIDE SIDE OF THE STALL OR ROOM FOR ACCESS COMPLIANCE.
WC-2	WATER CLOSET	4"	2"	1"	-----	KOHLER K-96053-SS, WELLCOMME ULTRA 1.28 GPF, FLOOR MOUNTED 16" TOP OF SEAT HEIGHT, ELONGATED BOWL, ZURN Z6000AV-HET AQUA ADVANTAGE WITH TRIPLE FILTERED DIAPHRAGM, 1.28 GPF FLUSH VALVE WITH MANUAL LEVER HANDLE, CHURCH 9500SSCT SOLID PLASTIC OPEN FRONT SEAT WITH STAINLESS STEEL HINGE POSTES, SELF-SUSTAINING HINGES AND STA-TITE FASTENING SYSTEM, FLUSH VALVE HANDLE SHALL POINT TO THE WIDE SIDE OF THE STALL OR ROOM FOR ACCESS COMPLIANCE.
U-1	URINAL ADA	2"	1-1/2"	3/4"	-----	KOHLER K-4991-ET, "BARDON", 0.125 GPF, WASHOUT STYLE, WALL-HUNG WITH STRAINER, ZURN Z6003AV-ULF MANUAL LEVER FLUSH VALVE, JAY R. SMITH 644 FLOOR MOUNTED SUPPORT CARRIER WITH BOTTOM BEARING PLATE. SEE ARCHITECTURAL DRAWINGS FOR ACCESSIBLE MOUNTING HEIGHTS.
U-2	URINAL	2"	1-1/2"	3/4"	-----	KOHLER K-4991-ET, "BARDON", 0.125 GPF, WASHOUT STYLE, WALL-HUNG WITH STRAINER, MOUNTED AT REGULAR HEIGHT (+24" AFF TO LIP), ZURN Z6003AV-ULF MANUAL LEVER FLUSH VALVE, JAY R. SMITH 644 FLOOR MOUNTED SUPPORT CARRIER WITH BOTTOM BEARING PLATE.
L-1	LAVATORY ADA	2"	1-1/2"	1/2"	1/2"	KOHLER K-2005-0, KINGSTON WALL HUNG, 20"x18" VITREOUS CHINA WITH BACKSPLASH & WALL BRACKET, SINGLE CENTER FAUCET HOLE, CHICAGO EQ-A11C-61ABCP SENSORED FAUCET, 10 SECOND RUN TIME, 0.35 GPM VANDAL PROOF NON-AERATING SPRAY OUTLET, MCGUIRE 155WC OFFSET GRID DRAIN, AND JAY R. SMITH 700-Z SUPPORT CARRIER WITH CONCEALED ARMS. PROVIDE WILKINS ZW3870XLT POINT OF USE THERMOSTATIC MIXING VALVE BELOW LAV. SEE ARCHITECTURAL DRAWINGS FOR ACCESSIBLE MOUNTING HEIGHTS.
S-1	SINGLE COMPARTMENT SINK	2"	1-1/2"	1/2"	1/2"	JUST SL-ADA-2125-A60-J, 22"x16"x6" DEEP BOWL SIZE, SINGLE COMPARTMENT, 18 GAUGE TYPE 304 STAINLESS STEEL WITH RIGHT REAR DRAIN LOCATION, SELF RIMMING LEDGE, JUST J-35GS BASKET STRAINER, CHICAGO 50-GN8AE35-317XKAB MANUAL FAUCET WITH 8" GOOSENECK SPOUT, 4" WRISTBLADE HANDLES, AND 1.5 GPM AERATOR. PROVIDE WILKINS ZW3870XLT-4P POINT OF USE THERMOSTATIC MIXING VALVE BELOW SINK.
S-2	SINGLE COMPARTMENT SINK	2"	1-1/2"	1/2"	1/2"	JUST SL-ADA-2133-A60-J, 22"x28"x6" DEEP BOWL SIZE, SINGLE COMPARTMENT, 18 GAUGE TYPE 304 STAINLESS STEEL WITH RIGHT REAR DRAIN LOCATION, SELF RIMMING LEDGE, JUST J-35GS BASKET STRAINER, CHICAGO 50-GN8AE35-317XKAB MANUAL FAUCET WITH 8" GOOSENECK SPOUT, 4" WRISTBLADE HANDLES, AND 1.5 GPM AERATOR. PROVIDE WILKINS ZW3870XLT-4P POINT OF USE THERMOSTATIC MIXING VALVE BELOW SINK.
S-3	DOUBLE COMPARTMENT SINK	2"	1-1/2"	1/2"	1/2"	JUST DL-ADA-2133-A60-J, 22"x28"x6" DEEP BOWL SIZE, DOUBLE COMPARTMENT, 18 GUAGE 304 STAINLESS STEEL WITH RIGHT REAR DRAIN LOCATIONS, SELF RIMMING LEDGE, (2) JUST J-35-GS BASKET STRAINERS, CHICAGO 50-GN8AE35-317XKAB MANUAL FAUCET WITH 8" GOOSENECK SPOUT, 4" WRISTBLADE HANDLES, AND 1.5 GPM AERATOR. PROVIDE WILKINS ZW3870XLT-4P POINT OF USE THERMOSTATIC MIXING VALVE BELOW SINK.
S-4	LAB SINK	2"	1-1/2"	1/2" CW 1/2" DI 1/2" RO	1/2"	LAB SINK INTEGRAL WITH COUNTER TOP. PROVIDE CHICAGO LWM1-B63-E FAUCET WITH RIGID/SWING GOOSENECK SPOUT WITH ATMOSPHERIC VACUUM BREAKER, FULL FLOW NOZZLE, 4" VANDAL PROOF WRISTBLADE HANDLES; PROVIDE ADDITIONAL DI FAUCET CHICAGO 828-ACP; PROVIDE ADDITIONAL RO FAUCET CHICAGO 828-ACP; PROVIDE WILKINS ZW3870XLT-4P POINT OF USE THERMOSTATIC MIXING VALVE BELOW SINK.
S-5	LAB SINK	2"	1-1/2"	1/2" RO	-----	LAB SINK INTEGRAL WITH COUNTER TOP. PROVIDE RO FAUCET CHICAGO 828-ACP.
S-6	LAB SINK	2"	1-1/2"	1/2" CW 1/2" DI	1/2"	LAB SINK INTEGRAL WITH COUNTER TOP. PROVIDE CHICAGO LWM1-B63-E FAUCET WITH RIGID/SWING GOOSENECK SPOUT WITH ATMOSPHERIC VACUUM BREAKER, FULL FLOW NOZZLE, 4" VANDAL PROOF WRISTBLADE HANDLES; PROVIDE ADDITIONAL DI FAUCET CHICAGO 828-ACP; PROVIDE WILKINS ZW3870XLT-4P POINT OF USE THERMOSTATIC MIXING VALVE BELOW SINK.
S-7	LAB SINK	2"	1-1/2"	1/2"	1/2"	LAB SINK INTEGRAL WITH COUNTER TOP. PROVIDE (2) CHICAGO LWM1-B63-E FAUCETS WITH RIGID/SWING GOOSENECK SPOUT, ATMOSPHERIC VACUUM BREAKER, FULL FLOW NOZZLE, 4" VANDAL PROOF WRISTBLADE HANDLES; PROVIDE WILKINS ZW3870XLT-4P POINT OF USE THERMOSTATIC MIXING VALVE BELOW SINK.
GD-1	GARBAGE DISPOSER	-----	-----	-----	-----	IN-SINK ERATOR EVOLUTION COMPACT MODEL WITH SOUND SEAL TECHNOLOGY, MULTI-GRIND STAINLESS STEEL CHAMBER, CONTINUOUS FEED, ON-OFF WALL SWITCH, 3-PRONG PLUG, 4-YEAR WARRANTY, 3/4 HP, 120V/1PH.
US-1	UTILITY SINK	3"	2"	1/2"	1/2"	ELKAY SS8124L2 FLOOR MOUNT 49-1/2"x27-1/2"x14" SINGLE COMPARTMENT SCULLERY SINK WITH DRAINBOARD. ELKAY LK940BP03T4S WALL MOUNT 4"WRISTBLADE HANDLES POLISHED CHROME.
US-2	UTILITY SINK	3"	2"	1/2"	1/2"	ELKAY 14-1C16X20-2-18X FLOOR MOUNT 52"x25-13/16"x43-3/4" SINGLE COMPARTMENT SCULLERY SINK WITH DRAINBOARD. ELKAY LK940BP03T4S WALL MOUNT 4"WRISTBLADE HANDLES POLISHED CHROME.
DF-1	DRINKING FOUNTAIN ADA	2"	1-1/2"	1/2"	-----	ELKAY EZH20 VANDAL RESISTANT MODEL LVRCTL8WSK, REFRIGERATED, BOTTLE FILLING STATION WITH BI-LEVEL BARRIER FREE DRINKING FOUNTAINS, INTEGRAL WATER FILTER, VANDAL RESISTANT BUBBLER HEADS, PUSH BUTTON VALVES, 8 GPH OF 50° F. WATER, 115V, 370 WATTS, 6.0 FLA, ELKAY #MLP200 SUPPORT CARRIER. PROVIDE (2) ADDITIONAL ELKAY #51300C WATER FILTERS TO OWNER. SEE ARCHITECTURAL DRAWINGS FOR ACCESSIBLE MOUNTING HEIGHT.
ES-1	EMERGENCY EYE WASH SHOWER	-----	-----	1"	1"	GUARDIAN GBF2372 BARRIER-FREE SHOWER EYEWASH COMBO, SHOWER HEAD 10" DIAMETER STAINLESS STEEL, SHOWER VALVE 1" IPS BRASS STAY-OPEN BALL VALVE WITH STAINLESS STEEL "PANIC BAR" ACTUATOR, COVER/ DRAIN PAN 16 GAUGE STAINLESS STEEL. PROVIDE G6044 THERMOSTATIC MIXING VALVE IN RECESSED STAINLESS STEEL CABINET SET TO DELIVER 80°F TEPID WATER.
HB-1	HOSE BIBB	-----	-----	1/2"	-----	WOODFORD #Y24 STANDPIPE STYLE 3/4" INLET BRASS HOSE FAUCET WITH LOCKSHIELD, AND NON-REMOVABLE VACUUM BREAKER.
HB-2	HOSE BIBB	-----	-----	1/2"	-----	WOODFORD #B24P 3/4" INLET BRASS WALL HOSE FAUCET IN FLUSH MOUNT WALL BOX WITH LOCKSHIELD, NON-REMOVABLE VACUUM BREAKER, AND OPTIONAL LOOSE TEE KEY HANDLE. PROVIDE ROUGH CHROME FINISH.
FD-1	FLOOR DRAIN	2"	1-1/2"	TP	-----	SMITH 2005Y-A05-HP-P050 COATED CAST IRON WITH 5" SQUARE NICKEL BRONZE HEEL PROOF GRATE, DOUBLE DRAINAGE FLANGE, NO HUB OUTLET AND TRAP PRIMER CONNECTION.
FD-2	FLOOR DRAIN	2"	1-1/2"	TP	-----	JAY R. SMITH 9667-SPG 2" WIDE LINEAR DRAIN, FABRICATED 18 GA TYPE 304 STAINLESS STEEL BODY WITH SATIN FINISH, LOOSE SET STAINLESS STEEL PERFORATED GRATE WITH 1/4" SQUARE OPENINGS, AND 2" NO-HUB BOTTOM OUTLET. SEE PLAN FOR DRAIN LENGTHS.
FS-1	FLOOR SINK	2"	1-1/2"	TP	-----	JAY R. SMITH 3140Y-12-C, 12" X 12" X 6" DEEP COATED CAST IRON WITH NICKEL BRONZE RIM WITH HALF GRATE, DOME BOTTOM STRAINER, DOUBLE DRAINAGE FLANGE,NO HUB OUTLET AND #2695Y-2 TRAP PRIMER CONNECTION FITTING WHERE APPLICABLE.
FS-2	FLOOR SINK	3"	2"	TP	-----	JAY R. SMITH 3160Y-12-C, 12" X 12" X 10" DEEP COATED CAST IRON WITH NICKEL BRONZE RIM WITH HALF GRATE, DOME BOTTOM STRAINER, DOUBLE DRAINAGE FLANGE, NO HUB OUTLET AND #2695Y-2 TRAP PRIMER CONNECTION FITTING WHERE APPLICABLE.
GT-1	GAS TURRET AIR	-----	-----	-----	-----	CHICAGO #LGN1-A11A-25, DECK MOUNTED GAS TURRET WITH DOUBLE NEEDLE VALVE, VANDAL PROOF 2-1/2" CROSS HANDLE WITH "AIR" INDEX BUTTON, FULL FLOW SERRATED NOZZLE.
GT-2	GAS TURRET VAC	-----	-----	-----	-----	CHICAGO #LGN1-A11B-25, DECK MOUNTED GAS TURRET WITH DOUBLE NEEDLE VALVE, VANDAL PROOF 2-1/2" CROSS HANDLE WITH "VAC" INDEX BUTTON, FULL FLOW SERRATED NOZZLE.
GT-3	GAS TURRET NAT. GAS	-----	-----	-----	-----	CHICAGO #LGN1-A11C-25, DECK MOUNTED GAS TURRET WITH DOUBLE NEEDLE VALVE, VANDAL PROOF 2-1/2" CROSS HANDLE WITH "GAS" INDEX BUTTON, FULL FLOW SERRATED NOZZLE.
GT-4	GAS TURRET NITROGEN	-----	-----	-----	-----	CHICAGO #LGN1-A11D-25, DECK MOUNTED GAS TURRET WITH DOUBLE NEEDLE VALVE, VANDAL PROOF 2-1/2" CROSS HANDLE WITH "NIT" INDEX BUTTON, FULL FLOW SERRATED NOZZLE.
TP-1	TRAP PRIMER	-----	-----	1/2"	-----	PRECISION PLUMBING PRODUCTS PR-500 "PRIME-RITE" PRESSURE DROP ACTIVATED WITH #DU-4 DISTRIBUTION UNIT FOR UP TO (4) FLOOR DRAINS. PROVIDE BALL SHUT-OFF VALVE AT INLET AND 14"x14" STAINLESS STEEL ACCESS DOOR WITH CYLINDER LOCK.
SA-1	SHOCK ABSORBER	-----	-----	-----	-----	SIOUX CHIEF HYDRA-RESTER MODEL 652-AS SEAMLESS COPPER CHAMBER APPROVED FOR CONCEALED INSTALLATION. PDI SYMBOL "A". INSTALL IN UPWARD POSITION.
SA-2	SHOCK ABSORBER	-----	-----	-----	-----	SIOUX CHIEF HYDRA-RESTER MODEL 653-BS SEAMLESS COPPER CHAMBER APPROVED FOR CONCEALED INSTALLATION. PDI SYMBOL "B". INSTALL IN UPWARD POSITION.
SA-3	SHOCK ABSORBER	-----	-----	-----	-----	SIOUX CHIEF HYDRA-RESTER MODEL 654-CS SEAMLESS COPPER CHAMBER APPROVED FOR CONCEALED INSTALLATION. PDI SYMBOL "C". INSTALL IN UPWARD POSITION.
SA-4	SHOCK ABSORBER	-----	-----	-----	-----	SIOUX CHIEF HYDRA-RESTER MODEL 655-DS SEAMLESS COPPER CHAMBER APPROVED FOR CONCEALED INSTALLATION. PDI SYMBOL "D". INSTALL IN UPWARD POSITION.
OD-1	OVERFLOW DRAIN	-----	-----	-----	-----	JAY R. SMITH 1310Y-WD-C-R-CIDG, GALVANIZED CAST IRON BODY WITH 12" DIAMETER GALVANIZED CAST IRON DOME, MODIFIED WITH 4" HIGH WATER DAM, UNDERDECK CLAMP, AND SUMP RECEIVER. SEE PLAN FOR PIPE OUTLET SIZE. SEE ARCHITECTURAL ROOF PLAN FOR LOCATIONS. SEE ARCHITECTURAL DETAILS FOR NECESSARY EXTENSIONS OR ADDITIONAL INSTALLATION ACCESSORIES.
OD-2	DECK OVERFLOW DRAIN	-----	-----	-----	-----	JAY R. SMITH 1330Y-WD-E-CIDG, GALVANIZED CAST IRON BODY WITH 8-1/2" DIAMETER GALVANIZED CAST IRON DOME, MODIFIED WITH 4" HIGH WATER DAM, AND EXTENSION. SEE PLAN FOR PIPE OUTLET SIZE. SEE ARCHITECTURAL AND PLUMBING PLANS FOR LOCATIONS. SEE ARCHITECTURAL DETAILS FOR NECESSARY EXTENSIONS OR ADDITIONAL INSTALLATION ACCESSORIES.
RD-1	ROOF DRAIN	-----	-----	-----	-----	JAY R. SMITH 1310Y-C-R-CIDG, GALVANIZED CAST IRON BODY WITH 12" DIAMETER GALVANIZED CAST IRON DOME, UNDERDECK CLAMP, AND SUMP RECEIVER. SEE PLAN FOR PIPE OUTLET SIZE. SEE ARCHITECTURAL ROOF PLAN FOR LOCATIONS. SEE ARCHITECTURAL DETAILS FOR NECESSARY EXTENSIONS OR ADDITIONAL INSTALLATION ACCESSORIES.
RD-2	DECK DRAIN	-----	-----	-----	-----	JAY R. SMITH 1330Y-E-CIDG, GALVANIZED CAST IRON BODY WITH 8-1/2" DIAMETER GALVANIZED CAST IRON DOME, AND EXTENSION. SEE PLAN FOR PIPE OUTLET SIZE. SEE ARCHITECTURAL AND PLUMBING PLANS FOR LOCATIONS. SEE ARCHITECTURAL DETAILS FOR NECESSARY EXTENSIONS OR ADDITIONAL INSTALLATION ACCESSORIES.
RR-1	ROOF RECEPTOR	2"	1-1/2"	-----	-----	JAY R. SMITH 3960Y-UDC, CAST IRON ROOF RECEPTOR WITH SOLID WATER DAM, CAST IRON DOME BOTTOM STRAINER, AND UNDERDECK CLAMP.
DC-1	DOWNSPOUT COVER	-----	-----	-----	-----	ZURN MODEL ZF199 CHAMELEON, POWDER COATED ALUMINUM BODY DOWNSPOUT NOZZLE, WITH FACE OF WALL FLANGE, DOWNSPOUT GASKET, AND PERFORATED HINGED FLAPPER. SEE PLANS FOR PIPE SIZE. ARCHITECT TO SELECT COLOR.
CP-1	CIRCULATING PUMP	-----	-----	-----	-----	GRUNDFOS UPS 26-99 SFC STAINLESS STEEL DOMESTIC HOT WATER IN-LINE CIRCULATING PUMP, WITH FLANGED CONNECTIONS, 3-SPEED MOTOR, INTEGRAL CHECK VALVE, 8 GPM AT 24 FT. TDH., 127W INPUT, 120V / 1PH.
TET-1	THERMAL EXPANSION TANK	-----	-----	-----	-----	WILKINS XT-35, LEAD-FREE THERMAL EXPANSION TANK, 9 GALLON TANK, 4.25 GALLONS ACCEPTANCE VOLUME, IN-LINE CONNECTION, 15.5 LBS.
WH-1	WATER HEATER	-----	-----	1-1/2"	1-1/2"	A.O. SMITH CYCLONE MXi MODULATING MODEL BTH-150A, DIRECT VENT CONDENSING, ULTRA LOW NOx, ASME RATED, 100 GALLON STORAGE CAPACITY GLASS LINED TANK, 150,000 BTUH INPUT, 223 GPH RECOVERY RATE AT 80 DEGREES F TEMPERATURE RISE, 98% THERMAL EFFICIENCY, BUILT-IN CONTROL DIAGNOSTICS, ELECTRICAL CHARACTERISTICS 120V/1PH, 15.0 AMPS. PROVIDE POLYPROPYLENE CONCENTRIC VENT KIT #100111100, #100289339 CONDENSATE NEUTRALIZATION KIT, AND 3/4" P&T RELIEF VALVE. DIMENSIONS: 27-3/4" DIAMETER x 76-1/2" HIGH. OPERATING WEIGHT: 1,400 LBS.

MARK	FIXTURE	CONNECTION SIZES S or W	V	CW	HW	DESCRIPTION
DI-1	DEIONIZATION SYSTEM	-----	-----	1"	-----	DEIONIZATION SYSTEM. PROVIDE WITH VANTAGE MFXR41002A SINGLE PASS RO SYSTEM MOUNTED ON A POWDER COATED ALUMINUM FRAME WITH HIGH PRESSURE FEED PUMP. PROVIDE TERRACON TERRAPURE TDC00125A 125-GALLON TANK WITH STAND. PROVIDE WITH DIRS-10-PP-UV-1-3 CONFIGURATION 3 W/VFD, AND DUPLEX PUMPS. PROVIDE 3.6 FT3 DI MIXING BED.
RO-1	REVERSE OSMOSIS	-----	-----	1-1/4"	-----	REVERSE OSMOSIS SYSTEM. PROVIDE WITH VANTAGE MFXR41002A SINGLE PASS RO SYSTEM MOUNTED ON A POWDER COATED ALUMINUM FRAME WITH HIGH PRESSURE FEED PUMP. PROVIDE TERRACON TERRAPURE TDC00125A 125-GALLON TANK WITH STAND. PROVIDE WITH DIRS-20-PP-UV-2-3 CONFIGURATION 3 W/VFD, AND DUPLEX PUMPS.
NT-1	NEUTRALIZATION TANK	4"	3"	-----	-----	PARK USA ANT150-PB 150 GALLON ACID NEUTRALIZATION TANK WITH CALCIUM CARBONATE CHEMICAL ROCK, CONCRETE SAMPLING WELL BASIN WITH PARK USA LABTANK PH1R REMOTE PH ANALYZER WITH DIGITAL CHART RECORDER MOUNTED IN NEMA 4X SURFACE MOUNTED ENCLOSURE.
BP-1	BOOSTER PUMP	-----	-----	1"	-----	FLOW THERM SYSTEMS FMV2.1-3LH MULTISTAGE VARIABLE SPEED DUPLEX PRESSURE BOOSTER W/ AQUALOGIC XL CONTROL PANEL. DESIGN FLOW RATE 100 GPM AND DISCHARGE PRESSURE 70 PSI. (2) GOULDS ESV MULTI-STAGE PUMPS MODEL 10SVG-2, 2HP, 3500RPM, FLA 11.32, 208V/60/3PH. PROVIDE WITH HYDRO PNEUMATIC TANK, WESSELS FXA-300.
WS-1	WATER SOFTENER	-----	-----	1"	-----	EVOQUA VANTAGE PTC SOFTENERS MODEL PTCSS_xx16X65 WITH A 24" DIAMETER BRINE TANK, 3.6 FT3 CARBON SERVICE TANK.
N2-1	NITROGEN TANK MANIFOLD	-----	-----	-----	-----	MATHESON SWITCHPRO MODEL 523-C28T7C3R AUTOMATIC SWITCHOVER SYSTEM, BRASS, 150 PSI REGULATOR, TWO CYLINDER CONFIGURATION, CGA 580 CONNECTIONS FOR NITROGEN SERVICE, HIGH PRESSURE ISOLATION VALVE, 1/2" OUTLET, FLEX HOSES, INTEGRAL CHECK VALVES, AND NFPA LABEL.
HE-1	HELIUM TANK REGULATOR	-----	-----	-----	-----	MATHESON MODEL SEQ3122A580 DUAL-STAGE HIGH-PURITY BRASS REGULATOR, 0-125 PSI DELIVERY PRESSURE, AND CGA CONNECTIONS FOR HELIUM SERVICE. PROVIDE NFPA LABEL.
AR-1	ARGON TANK REGULATOR	-----	-----	-----	-----	MATHESON MODEL SEQ3122A580 DUAL-STAGE HIGH-PURITY BRASS REGULATOR, 0-125 PSI DELIVERY PRESSURE, AND CGA CONNECTIONS FOR ARGON SERVICE. PROVIDE NFPA LABEL.
H-1	HYDROGEN TANK REGULATOR	-----	-----	-----	-----	MATHESON MODEL SEQ3121A580 DUAL-STAGE HIGH-PURITY BRASS REGULATOR, 0-50 PSI DELIVERY PRESSURE, AND CGA CONNECTIONS FOR HYDROGEN SERVICE. PROVIDE NFPA LABEL.
H2-1	HYDROGEN INERT GAS REGULATOR	-----	-----	-----	-----	MATHESON MODEL SEQ3122A580 DUAL-STAGE HIGH-PURITY BRASS REGULATOR, 0-125 PSI DELIVERY PRESSURE, AND CGA CONNECTIONS FOR HYDROGEN INERT GAS SERVICE. PROVIDE NFPA LABEL.
P5-1	P5 GAS TANK REGULATOR	-----	-----	-----	-----	MATHESON MODEL SEQ3121A580 DUAL-STAGE HIGH-PURITY BRASS REGULATOR, 0-50 PSI DELIVERY PRESSURE, AND CGA CONNECTIONS FOR P5 GAS SERVICE. PROVIDE NFPA LABEL.
N2O-1	NITROUS OXIDE TANK REGULATOR	-----	-----	-----	-----	MATHESON MODEL SEQ3122A580 DUAL-STAGE HIGH-PURITY BRASS REGULATOR, 0-125 PSI DELIVERY PRESSURE, AND CGA CONNECTIONS FOR NITROUS OXIDE SERVICE. PROVIDE NFPA LABEL. PROVIDE MATHESON SEQ6284326 GAS WARMER BETWEEN TANK AND REGULATOR.
C2H2-1	ACETYLENE TANK REGULATOR	-----	-----	-----	-----	MATHESON MODEL SEQ81LA510 ACETYLENE DUAL-STAGE GENERAL PURPOSE REGULATOR, 0-15 PSI DELIVERY PRESSURE, AND LEFT HAND ACETYLENE FITTINGS. PROVIDE NFPA LABEL. PROVIDE MATHESON MODEL SEQ6103AFL FLASH ARRESTOR ON OUTLET SIDE OF REGULATOR.
AC-1	AIR COMPRESSOR	-----	-----	-----	-----	POWEREX MODEL LSE1504 AIR COMPRESSOR, DELIVERING 30.4 SCFM AT 100 PSI WITH 15.2 SCFM IN RESERVE, WITH 15 HP MOTOR, 120 GALLON VERTICAL RECEIVER, CONTROL PANEL, DUAL DESSICANT AIR DRYER/FILTER, AND DEW POINT MONITORING. ELECTRICAL: 460V / 3 PH, 21.5 F.L.A. WEIGHT: 1,900 LBS.
VP-1	VACUUM PUMP	-----	-----	-----	-----	POWEREX MODEL IBVD0203 ROTARY VANE VACUUM PUMP, DELIVERING 22 SCFM AT 19" Hg, WITH (2) 2 HP MOTORS, 80 GALLON HORIZONTAL RECEIVER, NEMA-4 CONTROL PANEL WITH ELECTRONIC AUTO PURGE, EXHAUST FLEX HOSE, TANK SIGHT GAUGE, AND VIBRATION PADS. ELECTRICAL: 460V / 3PH, 7.4 F.L.A. WEIGHT: 600 LBS.
WMB-1	WASHING MACHINE BOX	2"	1-1/2"	3/4"	3/4"	GUY GRAY MODEL SSWB3, STAINLESS STEEL RECESSED CLOTHES WASHER SUPPLY BOX WITH INTEGRAL CW AND HW SUPPLY HOSE BIBBS W/ ARRESTORS, AND 2" DIAMETER DRAIN OUTLET.
SB-1	ICE MAKER SUPPLY BOX	-----	-----	1/2"	-----	SPECIALTY PRODUCTS OB-509-LL, LEAD FREE RECESSED METAL ICE MAKER WATER SUPPLY BOX WITH WHITE FINISH, INTEGRAL SHUT-OFF VALVE, AND MINI WATER HAMMER ARRESTER.

IDENTIFICATION STAMP
DIV. OF THE STATE ARCHITECT
APP: 02-122821 INC: 2
REVIEWED FOR
SS ☑ FLS ☑ ACS ☑
DATE: 11/20/2025

Teter, Inc. expressly reserves its common law copyright and other property rights in these plans. This document, the ideas and designs incorporated herein, as an instrument of professional service, is not to be used in whole or in part, for any other project without prior written authorization.

MARK	DATE	DESCRIPTION
A.	11/13/2025	DSA BACKCHECK

TETER, INC.
ARCHITECTS ENGINEERS CONNECTED
FRESNO HEADQUARTERS
VISALIA | BAKERSFIELD | MODESTO | SAN LUIS OBISPO

VISALIA CAMPUS UNIVERSITY CENTER
COLLEGE OF THE SEQUOIAS
915 S. MOONEY BLVD
VISALIA, CALIFORNIA

DRAWING TITLE
PLUMBING SCHEDULES

PROJECT NO.
22-12498

DRAWING
P002.2

\\tet-file1\Users\matt.soderstrom_TET\Documents\12498-P-UC_matt.soderstrom.rvt

PLOT DATE: 8/29/2025 12:04:55 PM

\\tetr-file1\Users\matt.soderstrom_TETR\Documents\12498-P-UC_matt.soderstrom.rvt

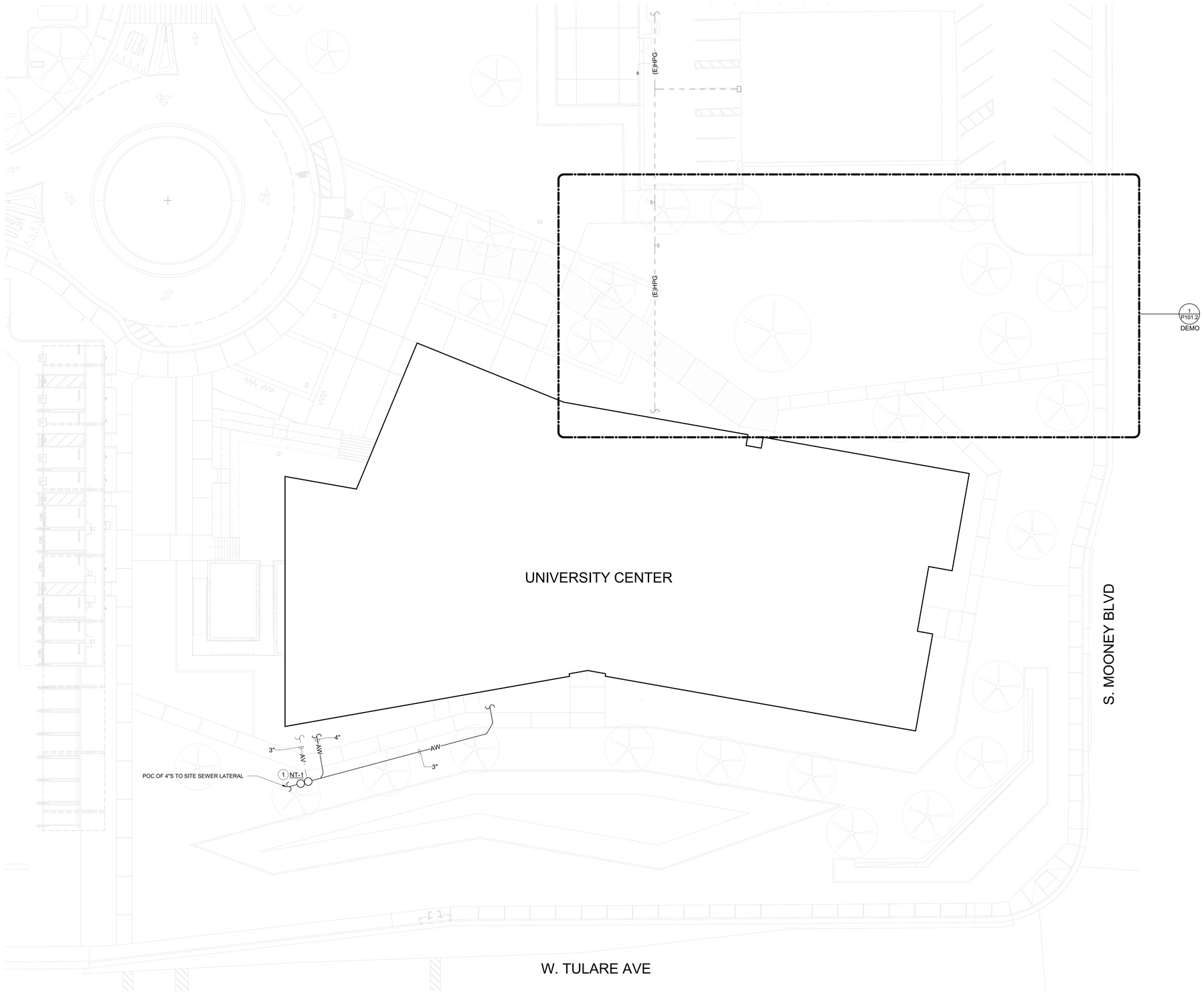

KEYNOTES

1 INSTALL ACID NEUTRALIZATION TANK AND SAMPLING BASIN. BEL. GRADE. CONNECT 4" AW TO INLET AND 4" S TO OUTLET. PROVIDE 3" AV AND ROUTE BEL. GRADE TO BUILDING.

PROPOSED PLUMBING SITE PLAN 1/16" = 1'-0" 1

PLOT DATE: 8/29/2025 12:05:04 PM

IDENTIFICATION STAMP
DIV. OF THE STATE ARCHITECT
APP: 02-122821 INC: 2
REVIEWED FOR
SS ☑ FLS ☑ ACS ☑
DATE: 11/20/2025

Teter, Inc. expressly reserves its common law copyright and other property rights in these plans. This document, the ideas and designs incorporated herein, as an instrument of professional service, is not to be used in whole or part, for any other project without prior written authorization.

MARK	DATE	DESCRIPTION
A	11/13/2025	DSA BACKCHECK

TETER, INC.
FRESNO HEADQUARTERS
VISALIA | BAKERSFIELD | MODESTO | SAN LUIS OBISPO
ARCHITECTS ENGINEERS CONNECTED

VISALIA CAMPUS UNIVERSITY CENTER
COLLEGE OF THE SEQUOIAS
915 S. MOONEY BLVD
VISALIA, CALIFORNIA

DRAWING TITLE
PROPOSED PLUMBING SITE PLAN

PROJECT NO.
22-12498

DRAWING
P100.2

\\tetr-file1\Users\matt.soderstrom_TETR\Documents\12498-P-UC_matt.soderstrom.rvt

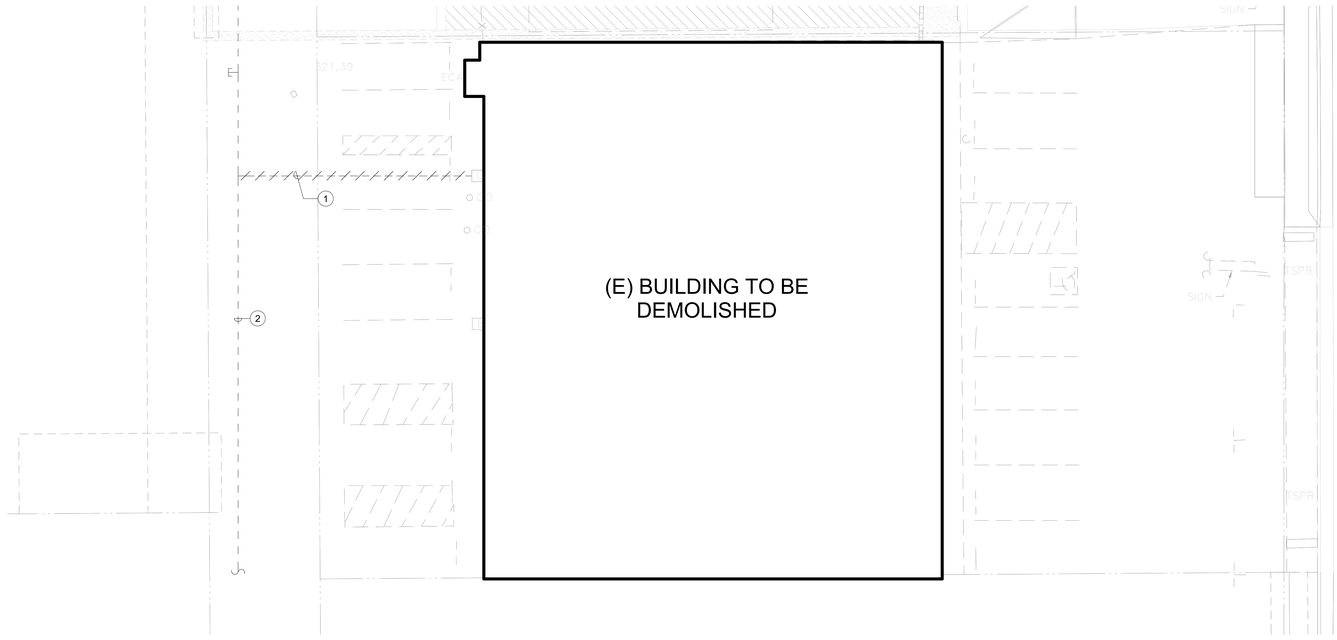

KEYNOTES

1 REMOVE (E) GAS SERVICE AND METER ASSEMBLY FOR BUILDING TO BE DEMOLISHED. COORDINATE REMOVAL OF GAS SERVICE WITH SOCALGAS.

2 (E) SOCALGAS HIGH PRESSURE GAS LINE TO REMAIN.

IDENTIFICATION STAMP
DIV. OF THE STATE ARCHITECT
APP: 02-122821 INC: 2
REVIEWED FOR
SS ☑ FLS ☑ ACS ☑
DATE: 11/20/2025

Teter, Inc. expressly reserves its common law copyright and other property rights in these plans. This document, the ideas and designs incorporated herein, as an instrument of professional service, is not to be used in whole or part, for any other project without prior written authorization.

MARK	DATE	DESCRIPTION
A	11/13/2025	DSA BACKCHECK

PROJECT NORTH

NORTH

ENLARGED PLUMBING DEMOLITION SITE PLAN

1" = 10'-0" | 1

TETER, INC.
FRESNO HEADQUARTERS
VISALIA | BAKERSFIELD | MODESTO | SAN LUIS OBISPO
ARCHITECTS ENGINEERS CONNECTED

VISALIA CAMPUS UNIVERSITY CENTER
COLLEGE OF THE SEQUOIAS
915 S. MOONEY BLVD
VISALIA, CALIFORNIA

DRAWING TITLE
ENLARGED PLUMBING DEMOLITION SITE PLAN

PROJECT NO.
22-12498

DRAWING
P101.2

PLOT DATE: 8/29/2025 12:05:07 PM

\\tetr-file1\Users\matt.soderstrom_TETR\Documents\12498-P-UC_matt.soderstrom.rvt

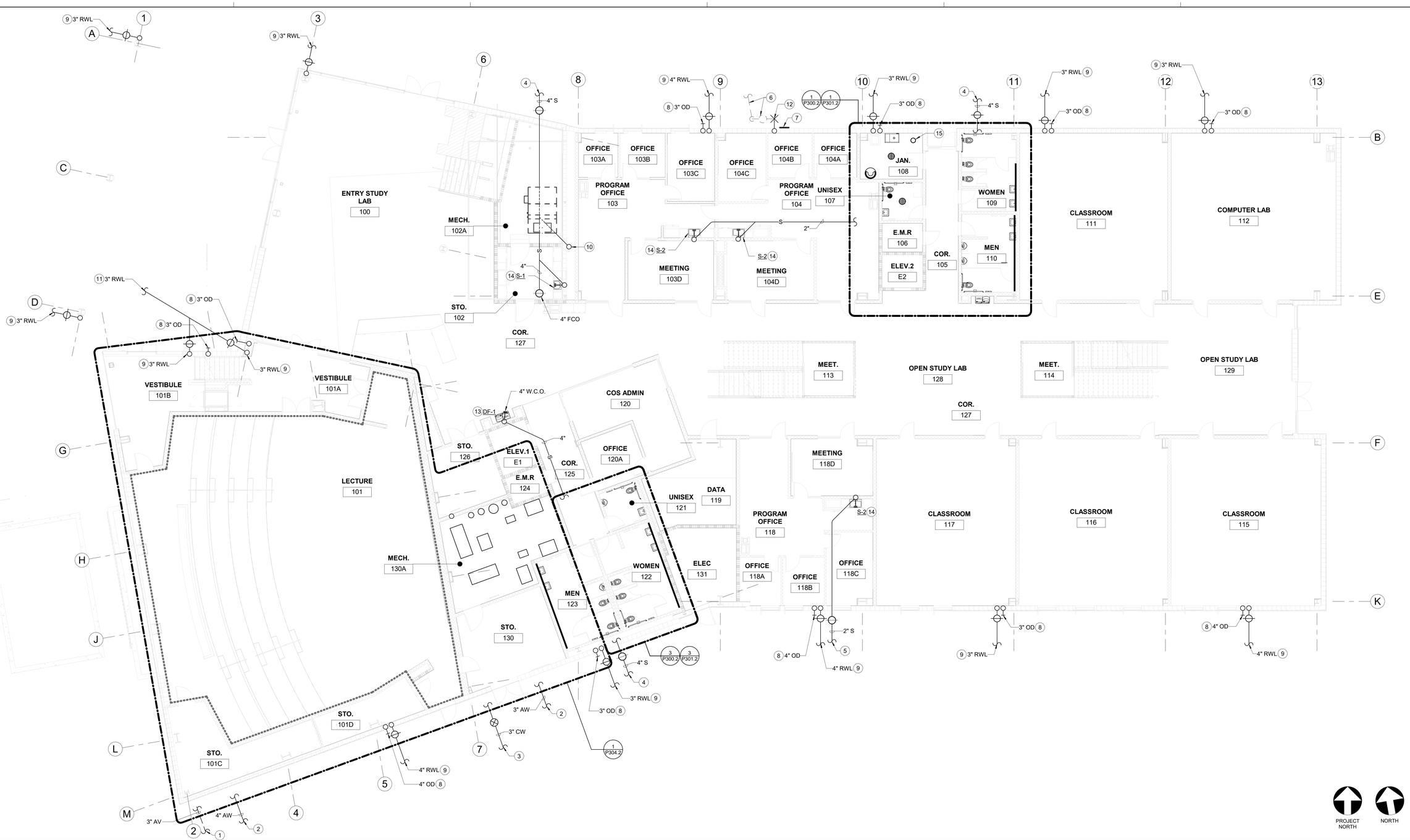

OVERALL PLUMBING FLOOR PLAN - FIRST FLOOR BEL. GRADE

1/8" = 1'-0" | 1

WALL LEGEND

1 HR FIRE RATED WALL ASSEMBLY. SEE ARCH FOR DETAIL.

DENOTES EXTENT OF ACOUSTICALLY SENSITIVE AREA WITH ACOUSTICALLY TREATED WALL CONSTRUCTION. SEE ARCH DWGS FOR DETAILS AND EXACT LOCATIONS. CONTRACTOR TO ACOUSTICALLY TREAT ALL PIPE PENETRATIONS THROUGH WALL PER DETAIL 15/A865.2. ALL PIPING BELOW 2ND FLOOR DECK WITHIN ACOUSTICALLY SENSITIVE AREA TO BE PROVIDED WITH MASS LOADED VINYL NOISE BARRIER, SEE SPECIFICATIONS FOR DETAIL.

KEYNOTES

1. 3" VENT BEL. GR. FROM ACID NEUTRALIZATION TANK. SEE P100.2 FOR CONT.
2. 4" ACID WASTE BEL. GR. TO ACID NEUTRALIZATION TANK. SEE P100.2 FOR CONT.
3. 3" CW POC BEL. GR. WITH SOV IN GRADE BOX. SEE CIVIL FOR CONT. SEE 1/P800.2 FOR SOV.
4. 4" S POC BEL. GR. WITH 2-WAY CLEANOUT TO GRADE. SEE CIVIL FOR CONT. SEE 2/P800.2 FOR CLEANOUT.
5. 2" S POC BEL. GR. WITH 2-WAY CLEANOUT TO GRADE. SEE CIVIL FOR CONT. SEE 2/P800.2 FOR CLEANOUT.
6. (E) HIGH PRESSURE GAS BEL. GR. AND GAS METER ABV. GR. SEE INCREMENT 1 DRAWINGS.
7. INSTALL GAS SOV SIGN ON WALL. SEE 4/P800.2 FOR DETAIL.
8. OD DN. FROM ABV. AND DAYLIGHT THRU WALL AT +12" AFF WITH DOWNSPOUT COVER DC-1.
9. RWL DN. FROM ABV. AND OFFSET BEL. GR. WITH 2-WAY CLEANOUT TO GRADE. SEE CIVIL FOR CONT. SEE 2/P800.2 FOR CLEANOUT.
10. 4" S DN. IN CHASE FROM FIRST FLOOR CEILING. SEE P201.2 FOR CONT.
11. RWL BEL. GR. SEE CIVIL FOR CONT.
12. POC (N) 1-1/2" G TO CUSTOMER SIDE OF GAS METER AND OFFSET THRU WALL INTO BUILDING. SEE INCREMENT 1 DRAWINGS FOR GAS METER INSTALLATION. SEE P201.2 FOR CONT.
13. 2" S DN. IN WALL FOR DRINKING FOUNTAIN.PROVIDE 4" W.C.O. BEL. DRINKING FOUNTAIN.
14. 2" S DN. IN WALL W/ W.C.O. FOR SINK.
15. FIRE SPRINKLER RISER, SEE FP211.2 FOR DETAIL.

PLOT DATE: 8/29/2025 12:05:21 PM

IDENTIFICATION STAMP
DIV. OF THE STATE ARCHITECT
APP: 02-122821 INC: 2
REVIEWED FOR
SS ☑ FLS ☑ ACS ☑
DATE: 11/20/2025

Teter, Inc. expressly reserves its common law copyright and other property rights in these plans. This document, the ideas and designs incorporated herein, as an instrument of professional service, is not to be used in whole or part, for any other project without prior written authorization.

MARK	DATE	DESCRIPTION
A	11/13/2025	DSA BACKCHECK

TETER, INC.
ARCHITECTS ENGINEERS CONNECTED
FRESNO HEADQUARTERS
VISALIA | BAKERSFIELD | MODESTO | SAN LUIS OBISPO

VISALIA CAMPUS UNIVERSITY CENTER
COLLEGE OF THE SEQUOIAS
915 S. MOONEY BLVD
VISALIA, CALIFORNIA

DRAWING TITLE
OVERALL PLUMBING FLOOR PLAN - FIRST FLOOR BEL. GRADE

PROJECT NO.
22-12498

DRAWING
P200.2

\\tetr-file1\Users\matt.soderstrom_TETR\Documents\12498-P-UC_matt.soderstrom.rvt

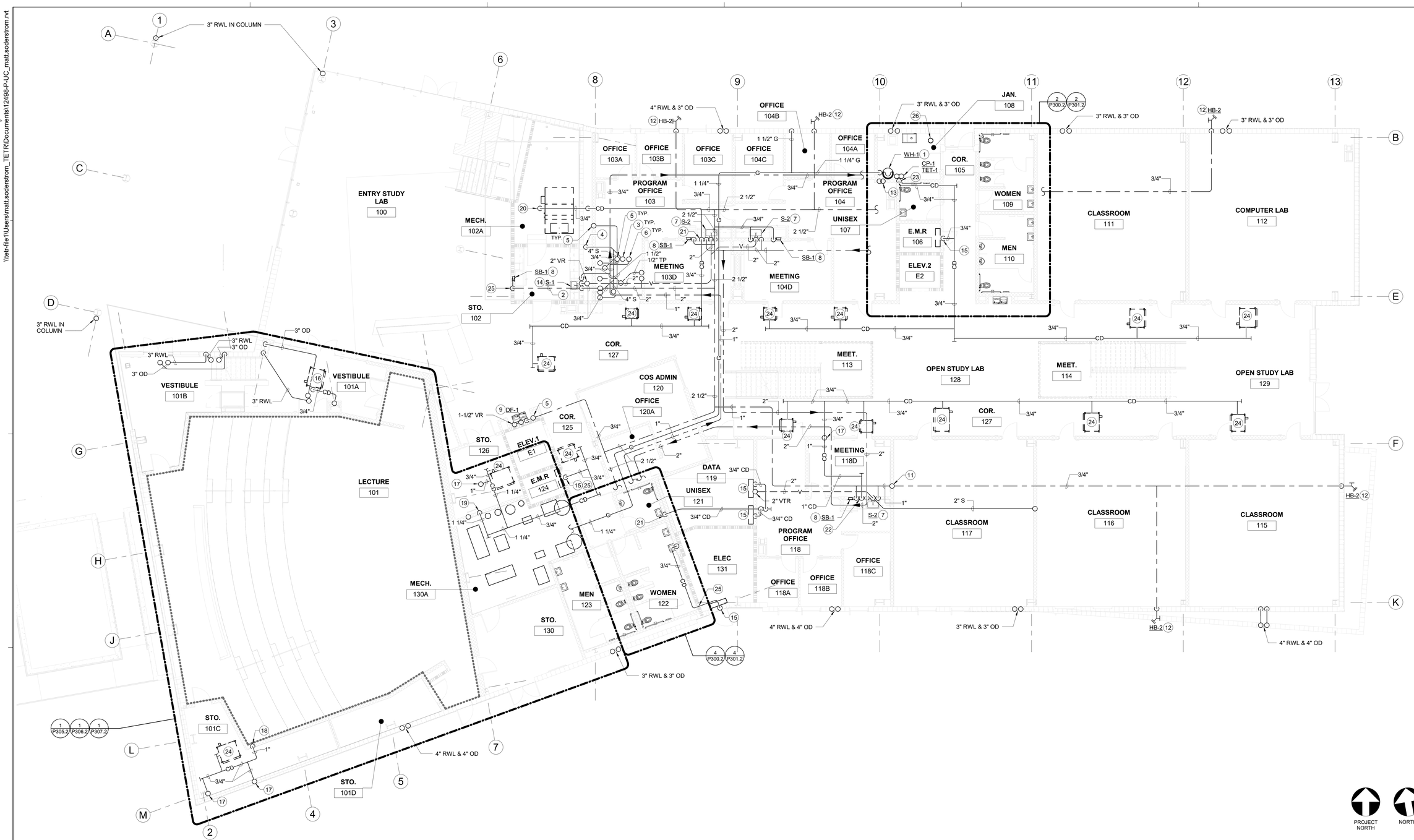

OVERALL PLUMBING FLOOR PLAN - FIRST FLOOR ABV. CLG. 1/8" = 1'-0" | 1

WALL LEGEND

1 HR FIRE RATED WALL ASSEMBLY. SEE ARCH FOR DETAIL.

DENOTES EXTENT OF ACOUSTICALLY SENSITIVE AREA WITH ACOUSTICALLY TREATED WALL CONSTRUCTION. SEE ARCH DWGS FOR DETAILS AND EXACT LOCATIONS. CONTRACTOR TO ACOUSTICALLY TREAT ALL PIPE PENETRATIONS THROUGH WALL PER DETAIL 15/A865.2. ALL PIPING BELOW 2ND FLOOR DECK WITHIN ACOUSTICALLY SENSITIVE AREA TO BE PROVIDED WITH MASS LOADED VINYL NOISE BARRIER, SEE SPECIFICATIONS FOR DETAIL.

KEYNOTES

1 1-1/4" G DN. IN WALL FOR WATER HEATER. SEE 7/P800.2 FOR WATER HEATER PIPING.
2 ROUTE 1/2" CW EXPOSED ALONG CEILING.
3 SEWER RISER DN. FROM SECOND FLOOR. OFFSET BEL. FIRST FLOOR CEILING. (TYP.)
4 4" S DN. IN CHASE TO BEL. GR. SEE 1/P200.2 FOR CONT.
5 CW RISER UP TO SECOND FLOOR. (TYP.)
6 HW RISER UP TO SECOND FLOOR. (TYP.)
7 2" V, 3/4" CW, & 3/4" HW DN. IN WALL FOR SINK.
8 1/2" CW DN. IN WALL FOR ICE MAKER SUPPLY BOX. MOUNT SUPPLY BOX AT +12" AFF.
9 1-1/2" VR & 3/4" CW DN. IN WALL FOR DRINKING FOUNTAIN.
10 VENT RISER UP TO SECOND FLOOR CEILING. SEE 1/P210.2 FOR CONT. (TYP.)
11 1" CW UP TO ROOF.
12 3/4" CW DN. IN WALL FOR HOSE BIBB AT +12" AFF.
13 CONNECT 3" INTAKE & 3" FLUE TO WATER HEATER AND ROUTE UP TO CONCENTRIC VENT ON ROOF. SEE M500.2 FOR CONT.
14 1-1/2" V, 3/4" CW, & 3/4" HW DN. IN WALL FOR SINK.
15 CONNECT 3/4" CD TO FAN COIL CONDENSATE PUMP OUTLET. RISE UP AND CONNECT TO TOP OF GRAVITY CD LINE.
16 CONNECT 3/4" CD TO FAN COIL CONDENSATE PUMP OUTLET. ROUTE UP IN COLUMN INCLOSURE TO SECOND FLOOR AND CONNECT TO TOP OF GRAVITY CD LINE.
17 CD DN. FROM SECOND FLOOR AND OFFSET ABV. FIRST FLOOR CEILING. SEE P210.2 FOR CONT.
18 1" CD DN. IN WALL AND DISCHARGE WITH 90° ELL DN. INTO FLOOR SINK.
19 1-1/4" CD DN. IN WALL AND DISCHARGE WITH 90° ELL DN. INTO FLOOR SINK.
20 CONNECT 3/4" CD TO AIR HANDLER CONDENSATE PUMP OUTLET. ROUTE OVERHEAD, UP IN CHASE, AND OFFSET ABV. FIRST FLOOR CEILING.
21 3/4" CD DN. IN WALL AND DISCHARGE INTO SINK TAILPIECE. SEE 25/P800.2 FOR DETAIL.
22 1" CD DN. IN WALL AND DISCHARGE INTO SINK TAILPIECE. SEE 25/P800.2 FOR DETAIL.
23 3/4" CD DN. IN WALL AND DISCHARGE WITH 90° ELL DN. INTO FLOOR SINK.
24 CONNECT 3/4" CD TO FAN COIL ABV. CLG. SEE 18/P800.2 FOR DETAIL.
25 SEE DETAILS ON P802.2 FOR ALL PENETRATIONS THRU FIRE RATED WALL.
26 FIRE SPRINKLER RISER, SEE FP211.2 FOR DETAIL.

IDENTIFICATION STAMP
DIV. OF THE STATE ARCHITECT
APP: 02-122821 INC: 2
REVIEWED FOR
SS ☑ FLS ☑ ACS ☑
DATE: 11/20/2025

Teter, Inc. expressly reserves its common law copyright and other property rights in these plans. This document, the ideas and designs incorporated herein, as an instrument of professional service, is not to be used in whole or part, for any other project without prior written authorization.

MARK	DATE	DESCRIPTION
A.	11/13/2025	DSA BACKCHECK

TETER, INC.
ARCHITECTS ENGINEERS CONNECTED
FRESNO HEADQUARTERS
VISALIA | BAKERSFIELD | MODESTO | SAN LUIS OBISPO

VISALIA CAMPUS UNIVERSITY CENTER
COLLEGE OF THE SEQUOIAS
915 S. MOONEY BLVD
VISALIA, CALIFORNIA

DRAWING TITLE
OVERALL PLUMBING FLOOR PLAN - FIRST FLOOR ABV. CEILING

PROJECT NO.
22-12498

DRAWING
P201.2

PLOT DATE: 8/29/2025 12:05:38 PM

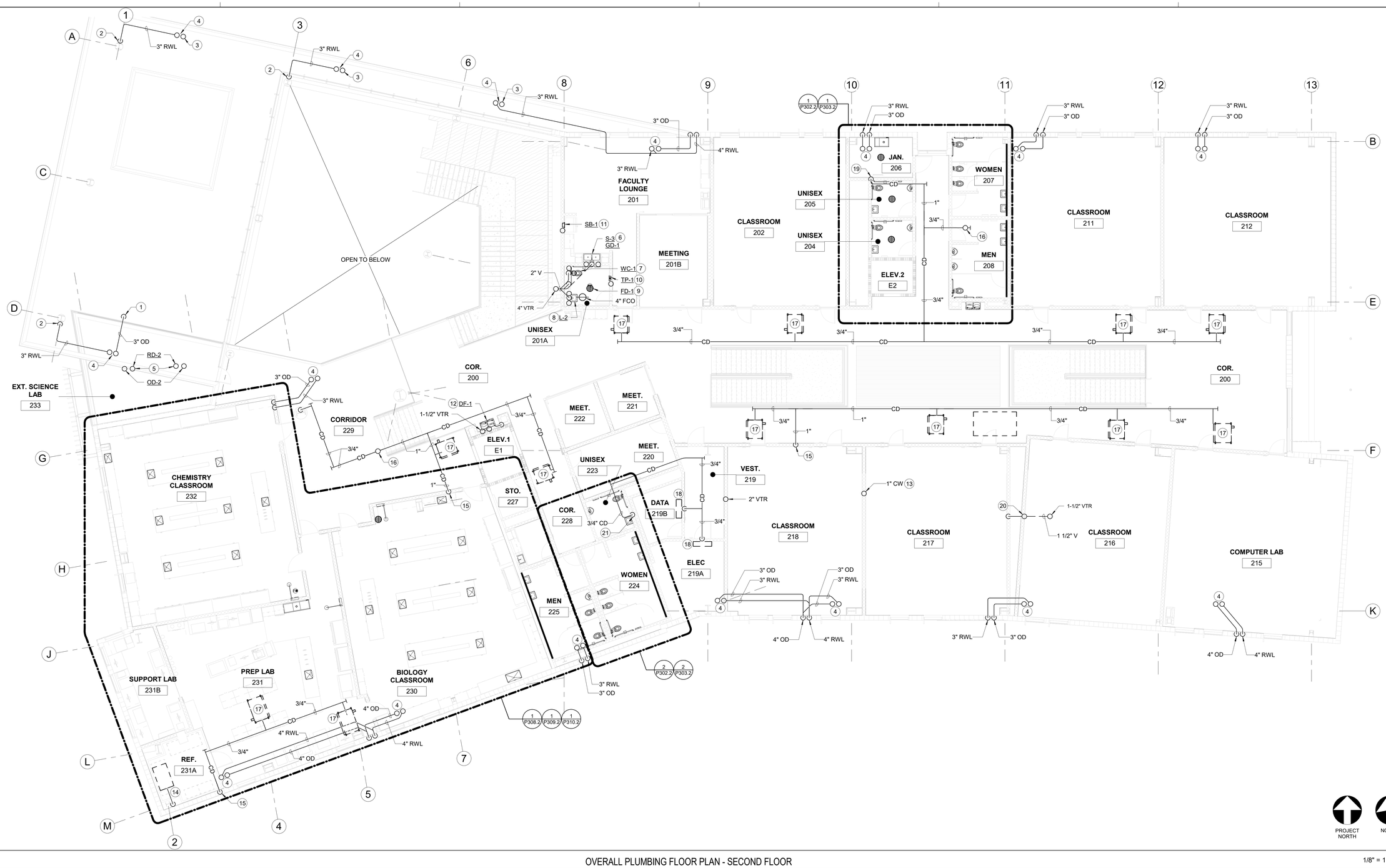

OVERALL PLUMBING FLOOR PLAN - SECOND FLOOR

1/8" = 1'-0" | 1

WALL LEGEND

1 HR FIRE RATED WALL ASSEMBLY. SEE ARCH FOR DETAIL.

KEYNOTES

1. OFFSET 3" OD IN SOFFIT AND DAYLIGHT DN. THRU BOTTOM OF SOFFIT.
2. OFFSET 3" RWL IN SOFFIT AND DROP DN. IN COLUMN TO BEL. GR. SEE 7/A826.2 FOR PIPE SUPPORT ALONG COLUMN.
3. DAYLIGHT 3" OD DN. THRU BOTTOM OF SOFFIT.
4. RWL & OD DN. FROM ROOF DRAIN AND OVERFLOW DRAIN ON ROOF. SEE P500.2 FOR CONT.
5. ROOF DRAIN AND OVERFLOW DRAIN INSTALLED IN BALCONY DECK. SEE 2/A821.2 FOR DRAIN LOCATIONS AND 25/A821.2 FOR INSTALLATION DETAIL. SEE 1/P201.2 FOR PIPING BELOW BALCONY.
6. 2" S, 3/4" CW, & 3/4" HW UP FROM FIRST FLOOR CEILING AND 1-1/2" VR FOR SINK.
7. 4" S & 1-1/2" CW UP FROM FIRST FLOOR CEILING AND 2" VR FOR WATER CLOSET.
8. 2" S, 1/2" CW, & 1/2" HW UP FROM FIRST FLOOR CEILING AND 1-1/2" VR FOR LAVATORY.
9. 2" S UP FROM FIRST FLOOR CEILING FOR FLOOR DRAIN.
10. 1/2" CW UP FROM FIRST FLOOR CEILING FOR TRAP PRIMER. MOUNT TRAP PRIMER BEHIND ACCESS PANEL AT +12" AFF.
11. 1/2" CW UP FROM FIRST FLOOR CEILING FOR ICE MAKER SUPPLY BOX. MOUNT SUPPLY BOX AT +12" AFF.
12. 2" S & 3/4" CW UP FROM FIRST FLOOR CEILING AND 1-1/2" VR FOR DRINKING FOUNTAIN.
13. 1" CW FROM FIRST FLOOR CEILING UP THRU ROOF.
14. CONNECT 3/4" CD TO COLD BOX EVAPORATOR. SEE 18/P800.2 FOR DETAIL. ROUTE DN. IN COLUMN ENCLOSURE TO FIRST FLOOR CEILING. SEE P201.2 FOR CONT.
15. CD DN. IN WALL AND OFFSET ABV. FIRST FLOOR CEILING. SEE P201.2 FOR CONT.
16. CD DN. FROM ROOF AND OFFSET ABV. SECOND FLOOR CEILING. SEE P500.2 FOR CONT.
17. CONNECT 3/4" CD TO FAN COIL ABV. CLG. SEE 18/P800.2 FOR DETAIL.
18. CONNECT 3/4" CD TO FAN COIL CONDENSATE PUMP OUTLET. RISE UP AND CONNECT TO TOP OF GRAVITY CD LINE.
19. 1" CD DN. IN WALL AND DISCHARGE WITH 90° ELL DN. INTO FLOOR SINK ON FIRST FLOOR.
20. 2" SEWER DN. FROM ROOF RECEPTOR ON ROOF WITH P-TRAP. ROUTE 2" S DN. IN WALL AND OFFSET ABOVE FIRST FLOOR CEILING.
21. 3/4" CD DN. IN WALL AND DISCHARGE INTO SINK TAILPIECE. SEE 25/P800.2 FOR DETAIL.

\\tetr-file1\Users\matt.soderstrom_TETR\Documents\12498-P-UC_matt.soderstrom.rvt

PLOT DATE: 8/29/2025 12:05:54 PM

IDENTIFICATION STAMP
DIV. OF THE STATE ARCHITECT
APP: 02-122821 INC: 2
REVIEWED FOR
SS ☑ FLS ☑ ACS ☑
DATE: 11/20/2025

Teter, Inc. expressly reserves its common law copyright and other property rights in these plans. This document, the ideas and designs incorporated herein, as an instrument of professional service, is not to be used in whole or in part, for any other project without prior written authorization.

MARK	DATE	DESCRIPTION
A.	11/13/2025	DSA BACKCHECK

TETER, INC.
ARCHITECTS ENGINEERS CONNECTED
FRESNO HEADQUARTERS
VISALIA | BAKERSFIELD | MODESTO | SAN LUIS OBISPO

VISALIA CAMPUS UNIVERSITY CENTER
COLLEGE OF THE SEQUOIAS
915 S. MOONEY BLVD
VISALIA, CALIFORNIA

DRAWING TITLE
OVERALL PLUMBING FLOOR PLAN - SECOND FLOOR

PROJECT NO.
22-12498

DRAWING
P210.2

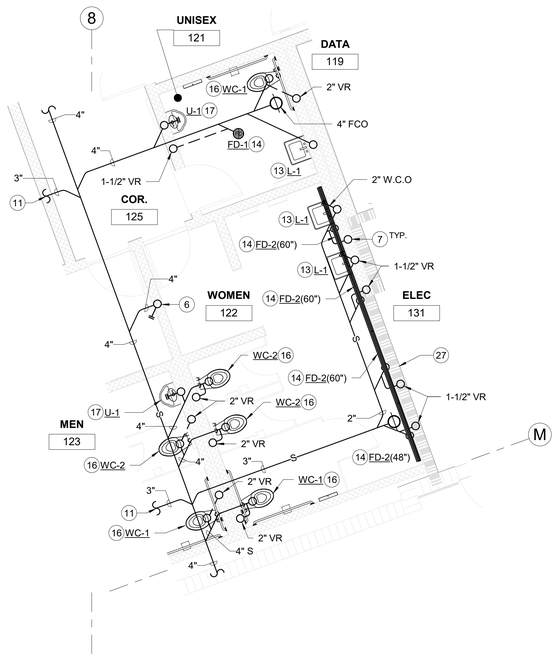

PROJECT NORTH NORTH

ENLARGED PLUMBING FLOOR PLAN - FIRST FLOOR WEST RESTROOMS BEL. GR. SEWER & VENT 1/4" = 1'-0" 3

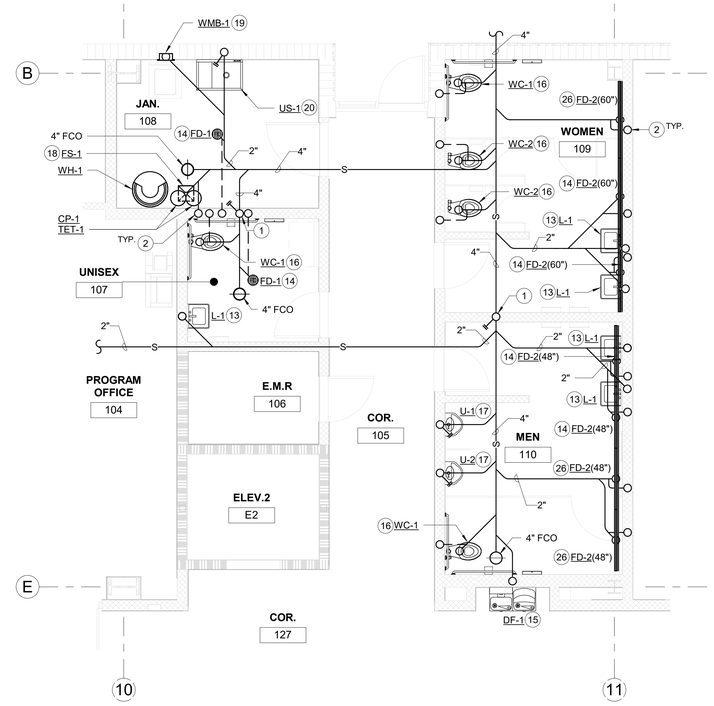

PROJECT NORTH NORTH

ENLARGED PLUMBING FLOOR PLAN - FIRST FLOOR EAST RESTROOMS BEL. GR. SEWER & VENT 1/4" = 1'-0" 1

KEYNOTES

1 4" S DN. FROM ABV. W/ W.C.O. SEE 2/P300.2 FOR CONT.
2 VENT RISER UP TO FIRST FLOOR CEILING. SEE 2/P300.2 FOR CONT. (TYP.)
3 SEWER RISER DN. FROM SECOND FLOOR. OFFSET BEL. FIRST FLOOR CEILING. (TYP.)
4 4" S DN. IN WALL TO BEL. GR. SEE 1/P300.2 FOR CONT.
5 VENT RISER UP TO SECOND FLOOR CEILING. SEE 1/P302.2 FOR CONT. (TYP.)
6 4" S DN. FROM ABV. W/ W.C.O. SEE 4/P300.2 FOR CONT.
7 VENT RISER UP TO FIRST FLOOR CEILING. SEE 4/P300.2 FOR CONT. (TYP.)
8 1-1/2" V DN. IN WALL FOR FIRST FLOOR UTILITY SINK.
9 4" S DN. IN WALL TO BEL. GR. SEE 3/P300.2 FOR CONT.
10 VENT RISER UP TO SECOND FLOOR CEILING. SEE 3/P302.2 FOR CONT. (TYP.)
11 SEE 1/P304.2 FOR CONT.
12 SEE 1/P305.2 FOR CONT.
13 2" S DN. IN WALL FOR FIRST FLOOR LAVATORY.
14 2" S W/ P-TRAP & 1-1/2" V OFFSET BEL. GR. FOR FIRST FLOOR DRAIN
15 2" S DN. IN WALL FOR FIRST FLOOR DRINKING FOUNTAIN.
16 4" S & 2" V OFFSET BEL. GR. FOR FIRST FLOOR WATER CLOSET.
17 2" S DN. IN WALL W/ W.C.O. FOR FIRST FLOOR URINAL.
18 2" S W/ P-TRAP & 1-1/2" V OFFSET BEL. GR. FOR FLOOR SINK.
19 2" S DN. IN WALL FOR WASHING MACHINE BOX.
20 2" S DN. IN WALL W/ W.C.O. FOR FIRST FLOOR UTILITY SINK.
21 1-1/2" V DN. IN WALL FOR FIRST FLOOR LAVATORY.
22 1-1/2" V DN. IN WALL FOR FIRST FLOOR URINAL.
23 2" V DN. IN WALL FOR FIRST FLOOR DRINKING FOUNTAIN.
24 1-1/2" V DN. IN WALL FOR WASHING MACHINE BOX.
25 CONNECT 3"Ø INTAKE AND 3"Ø FLUE TO WATER HEATER AND ROUTE UP IN WALL TO SECOND FLOOR. SEE DETAIL 7/P800.2 FOR CONNECTION TO WATER HEATER. SEE 1/P302.2 FOR CONT.
26 2" S W/ P-TRAP & 2" V OFFSET BEL. GR. FOR FIRST FLOOR DRAIN.
27 SEE DETAILS ON P802.2 FOR ALL PENETRATIONS THRU FIRE RATED WALL.



PROJECT NORTH NORTH

ENLARGED PLUMBING FLOOR PLAN - FIRST FLOOR WEST RESTROOMS ABV. CLG. SEWER & VENT 1/4" = 1'-0" 4

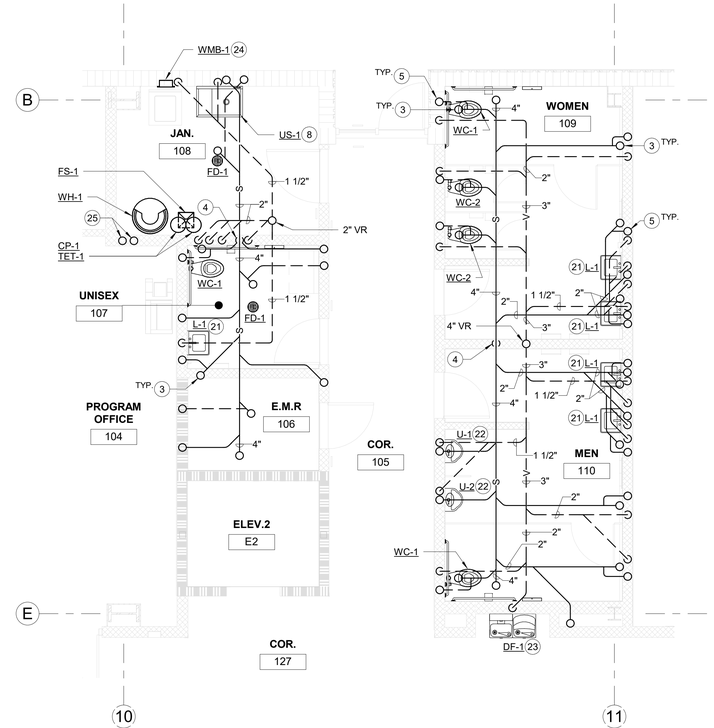

PROJECT NORTH NORTH

ENLARGED PLUMBING FLOOR PLAN - FIRST FLOOR EAST RESTROOMS ABV. CLG. SEWER & VENT 1/4" = 1'-0" 2

WALL LEGEND

1 HR FIRE RATED WALL ASSEMBLY. SEE ARCH FOR DETAIL.

IDENTIFICATION STAMP
DIV. OF THE STATE ARCHITECT
APP: 02-122821 INC: 2
REVIEWED FOR
SS ☑ FLS ☑ ACS ☑
DATE: 11/20/2025

Teter, Inc. expressly reserves its common law copyright and other property rights in these plans. This document, the ideas and designs incorporated herein, as an instrument of professional service, is not to be used in whole or in part, for any other project without prior written authorization.

MARK	DATE	DESCRIPTION
A	11/13/2025	DSA BACKCHECK

TETER, INC.
FRESNO HEADQUARTERS
VISALIA | BAKERSFIELD | MODESTO | SAN LUIS OBISPO
ARCHITECTS ENGINEERS CONNECTED

VISALIA CAMPUS UNIVERSITY CENTER
COLLEGE OF THE SEQUOIAS
915 S. MOONEY BLVD
VISALIA, CALIFORNIA

DRAWING TITLE
ENLARGED PLUMBING FLOOR PLANS - RESTROOMS SEWER & VENT

PROJECT NO.
22-12498

DRAWING
P300.2

\\tet-file1\Users\matt.soderstrom_TETR\Documents\12498-P-UC_matt.soderstrom.rvt
PLOT DATE: 8/29/2025 12:06:37 PM

\\tet-file1\Users\matt.soderstrom_TETER\Documents\12498-P-UIC_matt.soderstrom.rvt



PROJECT NORTH NORTH

ENLARGED PLUMBING FLOOR PLAN - FIRST FLOOR WEST RESTROOMS BEL. GR. DOMESTIC CW & HW 1/4" = 1'-0" 3

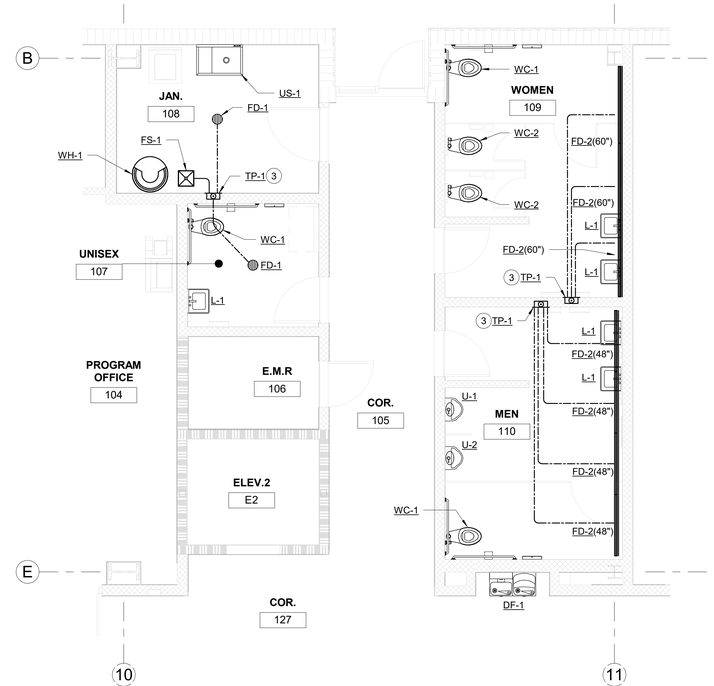

PROJECT NORTH NORTH

ENLARGED PLUMBING FLOOR PLAN - FIRST FLOOR EAST RESTROOMS BEL. GR. DOMESTIC CW & HW 1/4" = 1'-0" 1

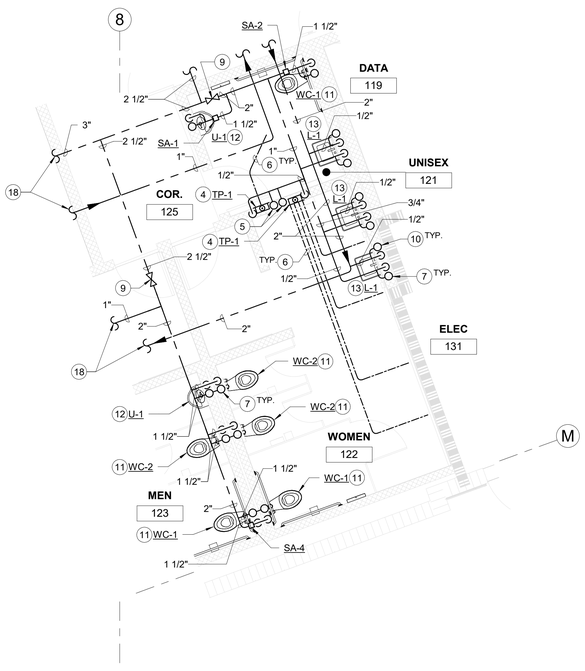

PROJECT NORTH NORTH

ENLARGED PLUMBING FLOOR PLAN - FIRST FLOOR WEST RESTROOMS ABV. CLG. DOMESTIC CW & HW 1/4" = 1'-0" 4

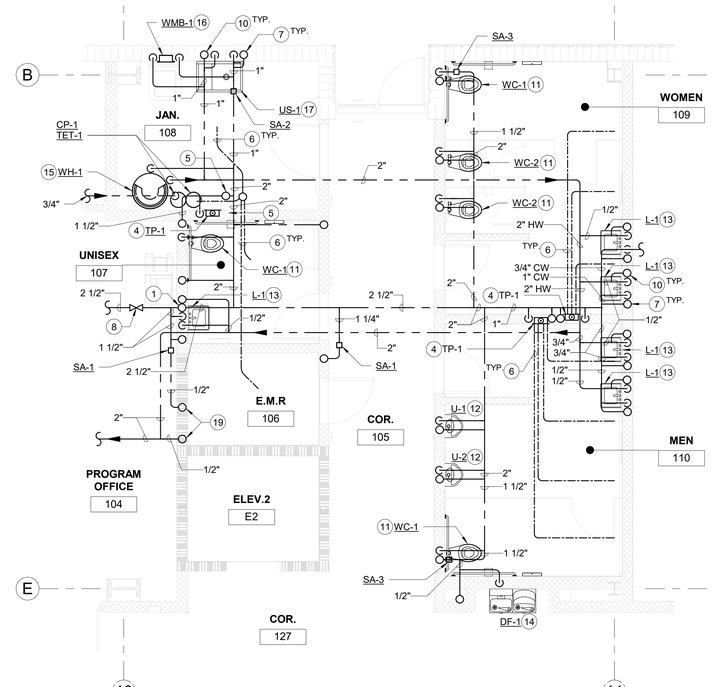

PROJECT NORTH NORTH

ENLARGED PLUMBING FLOOR PLAN - FIRST FLOOR EAST RESTROOMS ABV. CLG. DOMESTIC CW & HW 1/4" = 1'-0" 2

KEYNOTES

1. 3/4" CW UP TO ROOF.
2. 3/4" CW DN. IN WALL TO HOSE BIBB AT +12" AFF.
3. ROUTE 1/2" CW TP BEL. GR. FROM TRAP PRIMER TO FIRST FLOOR DRAINS.
4. 1/2" CW DN. IN WALL FOR FIRST FLOOR TRAP PRIMER BEHIND ACCESS PANEL AT +12" AFF.
5. 1/2" CW UP IN WALL TO SECOND FLOOR TRAP PRIMER.
6. 1/2" CW TP DN. FROM SECOND FLOOR TRAP PRIMER AND OFFSET ABV. FIRST FLOOR CLG. TO CONNECT TO SECOND FLOOR DRAINS. (TYP.)
7. CW RISER UP TO SECOND FLOOR. (TYP.)
8. CW SOV ABV. FIRST FLOOR LAY-IN CEILING. LOCATE VALVE AT +12" MAX ABV. CLG.
9. CW SOV ABV. FIRST FLOOR CEILING WITH CEILING ACCESS PANEL. LOCATE VALVE AT +12" MAX ABV. CLG.
10. HW RISER UP TO SECOND FLOOR. (TYP.)
11. 1-1/2" CW DN. IN WALL FOR FIRST FLOOR WATER CLOSET.
12. 1-1/4" CW DN. IN WALL FOR FIRST FLOOR URINAL.
13. 1/2" CW & 1/2" HW DN. IN WALL FOR FIRST FLOOR LAVATORY.
14. 1/2" CW DN. IN WALL FOR FIRST FLOOR DRINKING FOUNTAIN.
15. 2" CW, 2" HW, & 3/4" HWR DN. FOR WATER HEATER. SEE 7/P800.2 FOR WATER HEATER PIPING.
16. 3/4" CW & 3/4" HW DN. IN WALL FOR WASHING MACHINE BOX.
17. 3/4" CW & 3/4" HW DN. IN WALL FOR FIRST FLOOR UTILITY SINK.
18. SEE 1/P306.2 FOR CONTINUATION.
19. SEE DETAILS ON P802.2 FOR ALL PENETRATIONS THRU FIRE RATED WALL.

WALL LEGEND

1 HR FIRE RATED WALL ASSEMBLY. SEE ARCH FOR DETAIL.

IDENTIFICATION STAMP
DIV. OF THE STATE ARCHITECT
APP: 02-122821 INC: 2
REVIEWED FOR
SS ☑ FLS ☑ ACS ☑
DATE: 11/20/2025

Teter, Inc. expressly reserves its common law copyright and other property rights in these plans. This document, the ideas and designs incorporated herein, as an instrument of professional service, is not to be used in whole or in part, for any other project without prior written authorization.

MARK	DATE	DESCRIPTION
A	11/13/2025	DSA BACKCHECK

TETER, INC.
FRESNO HEADQUARTERS
VISALIA | BAKERSFIELD | MODESTO | SAN LUIS OBISPO
ARCHITECTS ENGINEERS CONNECTED

VISALIA CAMPUS UNIVERSITY CENTER
COLLEGE OF THE SEQUOIAS
915 S. MOONEY BLVD
VISALIA, CALIFORNIA

DRAWING TITLE
ENLARGED PLUMBING FLOOR PLANS - RESTROOMS
DOMESTIC COLD & HOT WATER

PROJECT NO.
22-12498

DRAWING
P301.2

PLOT DATE: 8/29/2025 12:07:19 PM

\\tetr-file1\Users\matt.soderstrom_TETR\Documents\12498-P-UC_matt.soderstrom.rvt



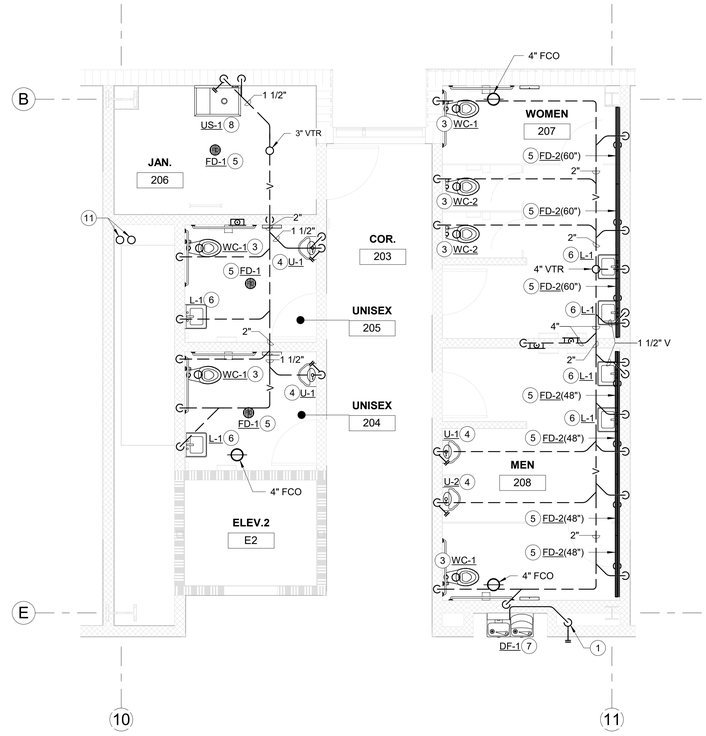

KEYNOTES

1 2" S DN. IN CHASE W/ W.C.O. AND OFFSET ABV. FIRST FLOOR CEILING. SEE 2/P300.2 FOR CONT.
2 SEE 1/P308.2 FOR CONT.
3 4" S UP FROM FIRST FLOOR CEILING FOR SECOND FLOOR WATER CLOSET. SEE 2/P300.2 FOR 2" VENT CONECTION
4 2" S UP FROM FIRST FLOOR CEILING W/ W.C.O. AND 1-1/2" VR FOR SECOND FLOOR URINAL.
5 2" S UP FROM FIRST FLOOR CEILING FOR SECOND FLOOR DRAIN. SEE 2/P300.2 FOR 1-1/2" VENT CONECTION.
6 2" S UP FROM FIRST FLOOR CEILING AND 1-1/2" VR FOR SECOND FLOOR LAVATORY.
7 2" S UP FROM FIRST FLOOR CEILING AND 1-1/2" VR FOR SECOND FLOOR DRINKING FOUNTAIN.
8 2" S UP FROM FIRST FLOOR CEILING AND 1-1/2" VR FOR SECOND FLOOR UTILITY SINK.
9 4" S UP FROM FIRST FLOOR CEILING FOR SECOND FLOOR WATER CLOSET. SEE 4/P300.2 FOR 2" VENT CONECTION.
10 2" S UP FROM FIRST FLOOR CEILING FOR SECOND FLOOR DRAIN. SEE 4/P300.2 FOR 1-1/2" VENT CONECTION.
11 3"Ø INTAKE & 3"Ø FLUE UP FROM FIRST FLOOR AND THRU ROOF TO CONCENTRIC VENT.

WALL LEGEND

1 HR FIRE RATED WALL ASSEMBLY. SEE ARCH FOR DETAIL.

PROJECT NORTH NORTH

ENLARGED PLUMBING FLOOR PLAN - SECOND FLOOR WEST RESTROOMS SEWER & VENT 1/4" = 1'-0" 2

PROJECT NORTH NORTH

ENLARGED PLUMBING FLOOR PLAN - SECOND FLOOR EAST RESTROOMS SEWER & VENT 1/4" = 1'-0" 1

PLOT DATE: 8/29/2025 12:07:35 PM

IDENTIFICATION STAMP
DIV. OF THE STATE ARCHITECT
APP: 02-122821 INC: 2
REVIEWED FOR
SS ☑ FLS ☑ ACS ☑
DATE: 11/20/2025

Teter, Inc. expressly reserves its common law copyright and other property rights in these plans. This document, the ideas and designs incorporated herein, as an instrument of professional service, is not to be used in whole or part, for any other project without prior written authorization.

MARK	DATE	DESCRIPTION
A.	11/13/2025	DSA BACKCHECK

TETER, INC.
FRESNO HEADQUARTERS
VISALIA | BAKERSFIELD | MODESTO | SAN LUIS OBISPO
ARCHITECTS ENGINEERS CONNECTED

VISALIA CAMPUS UNIVERSITY CENTER
COLLEGE OF THE SEQUOIAS
915 S. MOONEY BLVD
VISALIA, CALIFORNIA

DRAWING TITLE
ENLARGED PLUMBING FLOOR PLANS - RESTROOMS SEWER & VENT

PROJECT NO.
22-12498

DRAWING
P302.2

\\tetr-file1\Users\matt.soderstrom_TETR\Documents\12498-P-UC_matt.soderstrom.rvt

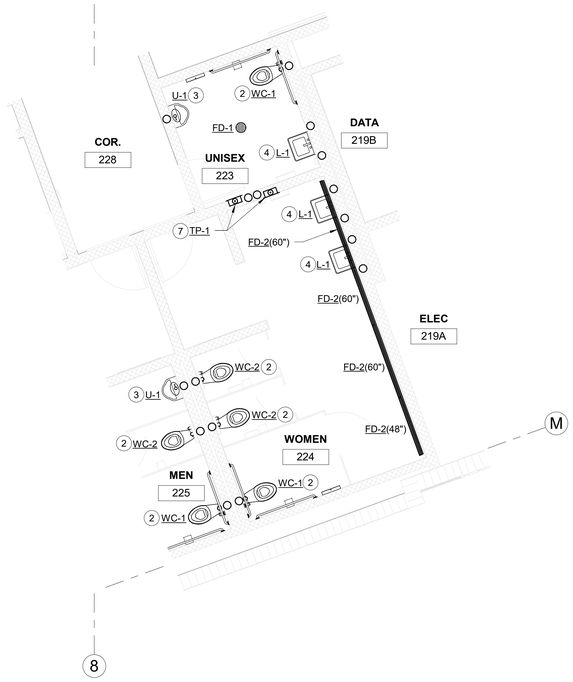

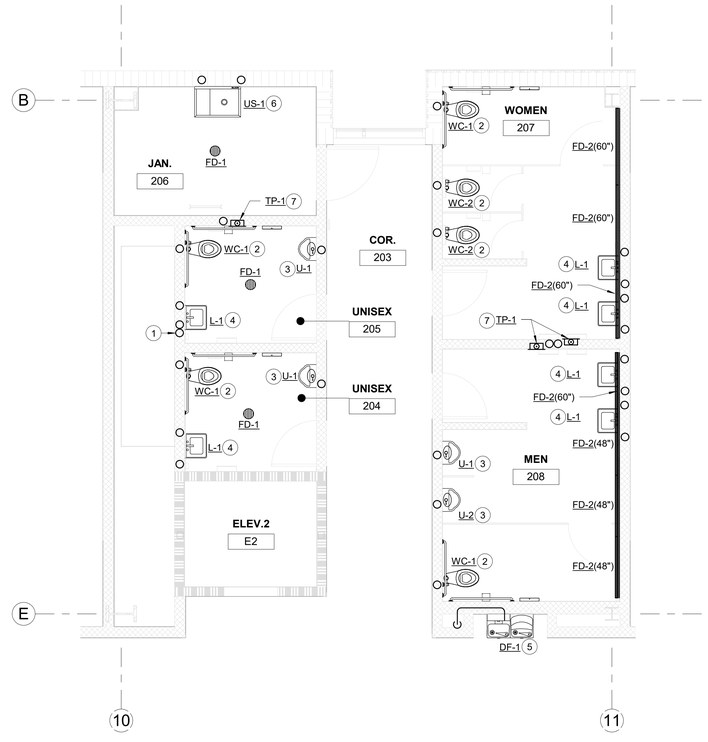

KEYNOTES

1. 3/4" CW FROM FIRST FLOOR CEILING UP THRU ROOF.
2. 1-1/2" CW UP FROM FIRST FLOOR CEILING FOR SECOND FLOOR WATER CLOSET.
3. 1-1/4" CW UP FROM FIRST FLOOR CEILING FOR SECOND FLOOR URINAL.
4. 1/2" CW & 1/2" HW UP FROM FIRST FLOOR CEILING FOR SECOND FLOOR LAVATORY.
5. 1/2" CW UP FROM FIRST FLOOR IN CHASE AND ROUTE TO DRINKING FOUNTAIN.
6. 3/4" CW & 3/4" HW UP FROM FIRST FLOOR CEILING FOR SECOND FLOOR UTILITY SINK.
7. 1/2" CW UP FROM FIRST FLOOR CEILING FOR SECOND FLOOR TRAP PRIMER BEHIND ACCESS PANEL AT +12" AFF.

WALL LEGEND

1 HR FIRE RATED WALL ASSEMBLY. SEE ARCH FOR DETAIL.

PROJECT NORTH NORTH

ENLARGED PLUMBING FLOOR PLAN - SECOND FLOOR WEST RESTROOMS DOMESTIC CW & HW 1/4" = 1'-0" 2

PROJECT NORTH NORTH

ENLARGED PLUMBING FLOOR PLAN - SECOND FLOOR EAST RESTROOMS DOMESTIC CW & HW 1/4" = 1'-0" 1

IDENTIFICATION STAMP
DIV. OF THE STATE ARCHITECT
APP: 02-122821 INC: 2
REVIEWED FOR
SS ☑ FLS ☑ ACS ☑
DATE: 11/20/2025

Teter, Inc. expressly reserves its common law copyright and other property rights in these plans. This document, the ideas and designs incorporated herein, as an instrument of professional service, is not to be used in whole or part, for any other project without prior written authorization.

MARK	DATE	DESCRIPTION
A	11/13/2025	DSA BACKCHECK

TETER, INC.
FRESNO HEADQUARTERS
VISALIA | BAKERSFIELD | MODESTO | SAN LUIS OBISPO
ARCHITECTS ENGINEERS CONNECTED

VISALIA CAMPUS UNIVERSITY CENTER
COLLEGE OF THE SEQUOIAS
915 S. MOONEY BLVD
VISALIA, CALIFORNIA

DRAWING TITLE
ENLARGED PLUMBING FLOOR PLANS - RESTROOMS
DOMESTIC COLD & HOT WATER

PROJECT NO.
22-12498

DRAWING
P303.2

PLOT DATE: 8/29/2025 12:07:50 PM

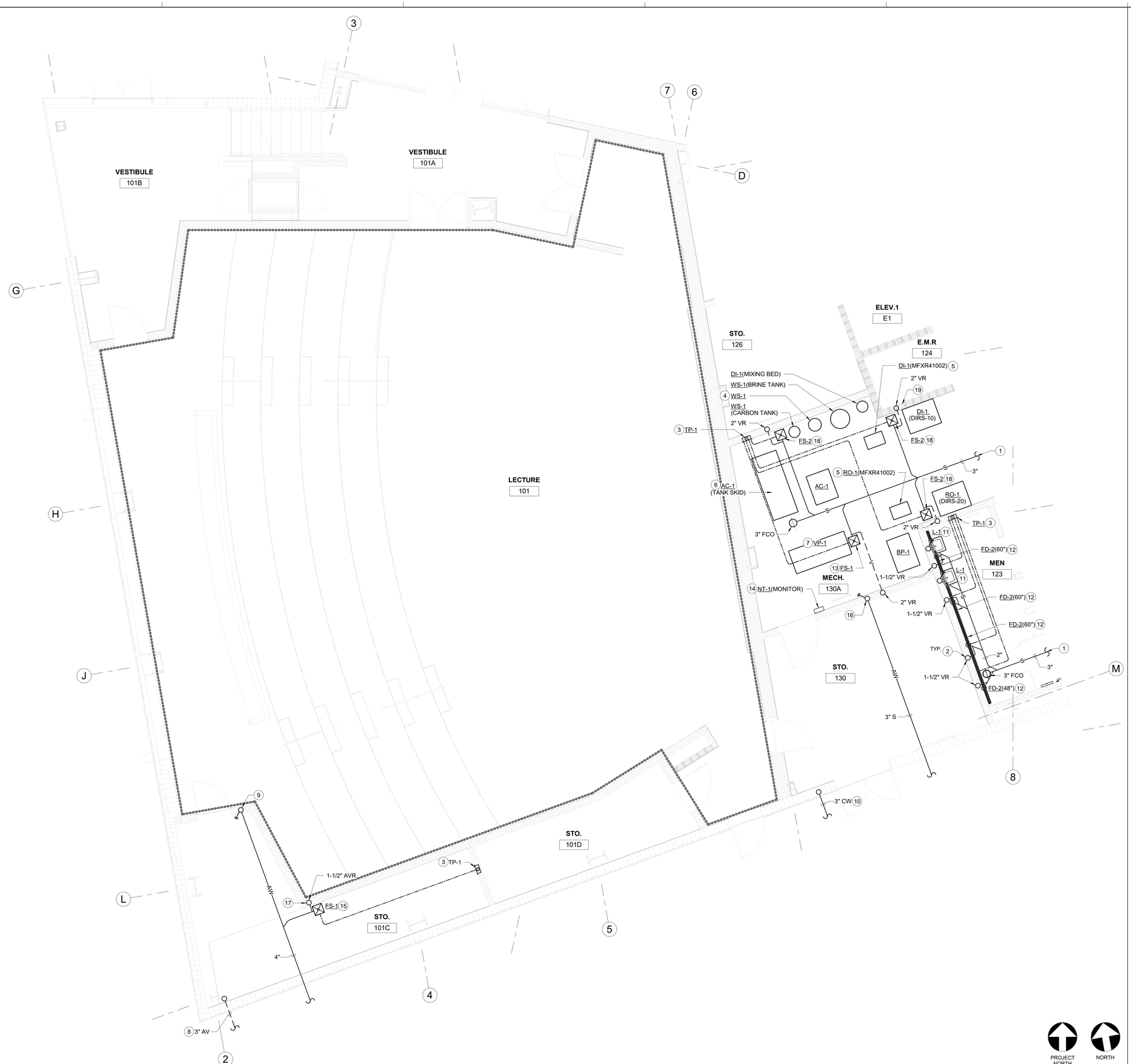

KEYNOTES

1 SEE 3/P300.2 FOR CONT.
2 VENT RISER UP TO FIRST FLOOR CEILING. SEE 1/P305.2 FOR CONT. (TYP.)
3 ROUTE 1/2" CW TP BEL. GR. FROM TRAP PRIMER TO FIRST FLOOR DRAINS.
4 ROUTE WATER SOFTENER DRAIN TO FLOOR SINK AND DISCHARGE INTO FLOOR SINK WITH 1" AIR GAP.
5 ROUTE REVERSE OSMOSIS SYSTEM DRAIN TO FLOOR SINK AND DISCHARGE INTO FLOOR SINK WITH 1" AIR GAP.
6 ROUTE AIR COMPRESSOR TANK DRAIN AND AIR DRYER DRAIN TO FLOOR SINK AND DISCHARGE INTO FLOOR SINK WITH 1" AIR GAP.
7 ROUTE VACUUM PUMP TANK DRAIN TO FLOOR SINK AND DISCHARGE INTO FLOOR SINK WITH 1" AIR GAP.
8 3" AV BEL. GR., SEE P200.2 FOR CONT. ROUTE ACID VENT UP IN CHASE TO SECOND FLOOR CEILING, SEE P308.2 FOR CONT.
9 4" AW DN. FROM FIRST FLOOR CEILING, SEE P305.2 FOR CONT. OFFSET BEL. GR., SEE P200.2 FOR CONT.
10 3" CW BEL. GR., SEE P200.2 FOR CONT. OFFSET UP IN EXTERIOR WALL TO FIRST FLOOR CEILING, SEE P306.2 FOR CONT.
11 2" S DN. IN WALL FOR FIRST FLOOR LAVATORY.
12 2" S W/ P-TRAP & 1-1/2" V OFFSET BEL. GR. FOR FIRST FLOOR DRAIN.
13 2" S W/ P-TRAP & 2" V OFFSET BEL. GR. FOR FLOOR SINK.
14 MOUNT NEUTRALIZATION TANK MONITOR ON WALL. SEE P100.2 FOR NEUTRALIZATION TANK LOCATION. SEE ELECTRICAL DRAWINGS FOR CONDUIT.
15 2" AW W/ P-TRAP & 1-1/2" AV OFFSET BEL. GR. FOR FLOOR SINK.
16 3" AW DN. FROM FIRST FLOOR CEILING, SEE P305.2 FOR CONT. OFFSET BEL. GR., SEE P200.2 FOR CONT.
17 1-1/2" AV RISER UP TO FIRST FLOOR CEILING. SEE 1/P305.2 FOR CONT.
18 3" S W/ P-TRAP & 2" V OFFSET BEL. GR. FOR FLOOR SINK.
19 SEE DETAILS ON P802.2 FOR ALL PENETRATIONS THRU FIRE RATED WALL.

WALL LEGEND

1 HR FIRE RATED WALL ASSEMBLY. SEE ARCH FOR DETAIL.

DENOTES EXTENT OF ACOUSTICALLY SENSITIVE AREA WITH ACOUSTICALLY TREATED WALL CONSTRUCTION. SEE ARCH DWGS FOR DETAILS AND EXACT LOCATIONS. CONTRACTOR TO ACOUSTICALLY TREAT ALL PIPE PENETRATIONS THROUGH WALL PER DETAIL 15/A865.2. ALL PIPING BELOW 2ND FLOOR DECK WITHIN ACOUSTICALLY SENSITIVE AREA TO BE PROVIDED WITH MASS LOADED VINYL NOISE BARRIER, SEE SPECIFICATIONS FOR DETAIL.

ENLARGED PLUMBING FLOOR PLAN – LECTURE AREA BEL. GR. SEWER, VENT, DOMESTIC CW & HW, & LAB PIPING

1/4" = 1'-0" | 1

IDENTIFICATION STAMP
DIV. OF THE STATE ARCHITECT
APP: 02-122821 INC: 2
REVIEWED FOR
SS ☑ FLS ☑ ACS ☑
DATE: 11/20/2025

Teter, Inc. expressly reserves its common law copyright and other property rights in these plans. This document, the ideas and designs incorporated herein, as an instrument of professional service, is not to be used in whole or part, for any other project without prior written authorization.

MARK	DATE	DESCRIPTION
A	11/13/2025	DSA BACKCHECK

TETER, INC.
FRESNO HEADQUARTERS
VISALIA | BAKERSFIELD | MODESTO | SAN LUIS OBISPO
ARCHITECTS ENGINEERS CONNECTED

VISALIA CAMPUS UNIVERSITY CENTER
COLLEGE OF THE SEQUOIAS
915 S. MOONEY BLVD
VISALIA, CALIFORNIA

DRAWING TITLE
ENLARGED PLUMBING FLOOR PLAN - LECTURE AREA BEL. GR. SEWER, VENT, DOMESTIC COLD & HOT WATER, AND LAB PIPING

PROJECT NO.
22-12498

DRAWING
P304.2

PLOT DATE: 8/29/2025 12:08:00 PM

\\tetr-file1\Users\matt.soderstrom_TETR\Documents\12498-P-UC_matt.soderstrom.rvt

\\tetr-file1\Users\matt.soderstrom_TETR\Documents\12498-P-UC_matt.soderstrom.rvt

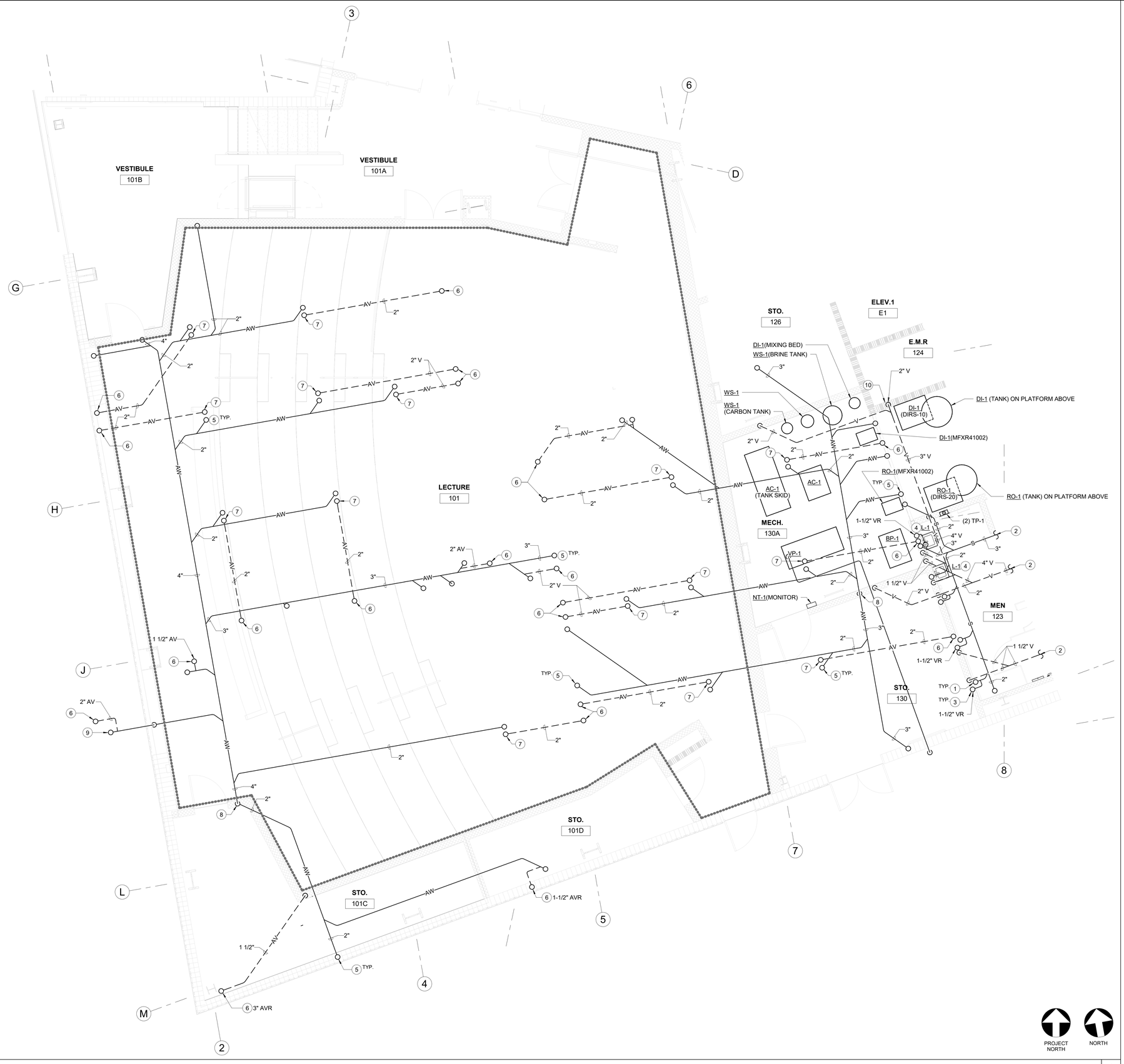

KEYNOTES

1. SEWER RISER DN. AND OFFSET ABV. FIRST FLOOR CEILING. (TYP.)
2. SEE 4/P300.2 FOR CONT.
3. VENT RISER UP TO SECOND FLOOR CEILING. SEE 1/P308.2 FOR CONT. (TYP.)
4. 1-1/2" V DN. IN WALL FOR FIRST FLOOR LAVATORY.
5. ACID WASTE DN. AND OFFSET ABV. FIRST FLOOR CEILING. PROVIDE DRIP PAN AND LEAK DETECTOR BELOW RISER PER DETAIL 21/P800.2. (TYP.)
6. ACID VENT RISER UP TO SECOND FLOOR CEILING. SEE P308.2 FOR CONT. (TYP.)
7. ACID VENT DN. FROM SECOND FLOOR ISLAND AND OFFSET ABV. FIRST FLOOR CEILING. (TYP.)
8. 3" AW DN. IN WALL TO BEL. GR. SEE P304.2 FOR CONT.
9. 2" AW DN. FROM SECOND FLOOR AND OFFSET IN SOFFIT. PROVIDE DRIP PAN AND LEAK DETECTOR BELOW RISER PER DETAIL 21/P800.2. DROP DN. IN EXTERIOR WALL AND OFFSET ABV. FIRST FLOOR CEILING.
10. SEE DETAILS ON P802.2 FOR ALL PENETRATIONS THRU FIRE RATED WALL.

GENERAL NOTES

A. PROVIDE DRIP PAN AND LEAK DETECTOR BELOW ALL ACID WASTE DROPS THRU SECOND FLOOR PER DETAIL 21/P800.2.

WALL LEGEND

1 HR FIRE RATED WALL ASSEMBLY. SEE ARCH FOR DETAIL.

DENOTES EXTENT OF ACOUSTICALLY SENSITIVE AREA WITH ACOUSTICALLY TREATED WALL CONSTRUCTION. SEE ARCH DWGS FOR DETAILS AND EXACT LOCATIONS. CONTRACTOR TO ACOUSTICALLY TREAT ALL PIPE PENETRATIONS THROUGH WALL PER DETAIL 15/A865.2. ALL PIPING BELOW 2ND FLOOR DECK WITHIN ACOUSTICALLY SENSITIVE AREA TO BE PROVIDED WITH MASS LOADED VINYL NOISE BARRIER, SEE SPECIFICATIONS FOR DETAIL.

IDENTIFICATION STAMP
DIV. OF THE STATE ARCHITECT
APP: 02-122821 INC: 2
REVIEWED FOR
SS ☑ FLS ☑ ACS ☑
DATE: 11/20/2025

Teter, Inc. expressly reserves its common law copyright and other property rights in these plans. This document, the ideas and designs incorporated herein, as an instrument of professional service, is not to be used in whole or part, for any other project without prior written authorization.

MARK	DATE	DESCRIPTION
A	11/13/2025	DSA BACKCHECK

TETER, INC.
ARCHITECTS ENGINEERS CONNECTED
FRESNO HEADQUARTERS
VISALIA | BAKERSFIELD | MODESTO | SAN LUIS OBISPO

VISALIA CAMPUS UNIVERSITY CENTER
COLLEGE OF THE SEQUOIAS
915 S. MOONEY BLVD
VISALIA, CALIFORNIA

DRAWING TITLE
ENLARGED PLUMBING FLOOR PLAN - LECTURE AREA ABV. CLG. SEWER & VENT

PROJECT NO.
22-12498

DRAWING
P305.2

\\tetr-file1\Users\matt.soderstrom_TETER\Documents\12498-P-UC_matt.soderstrom.rvt

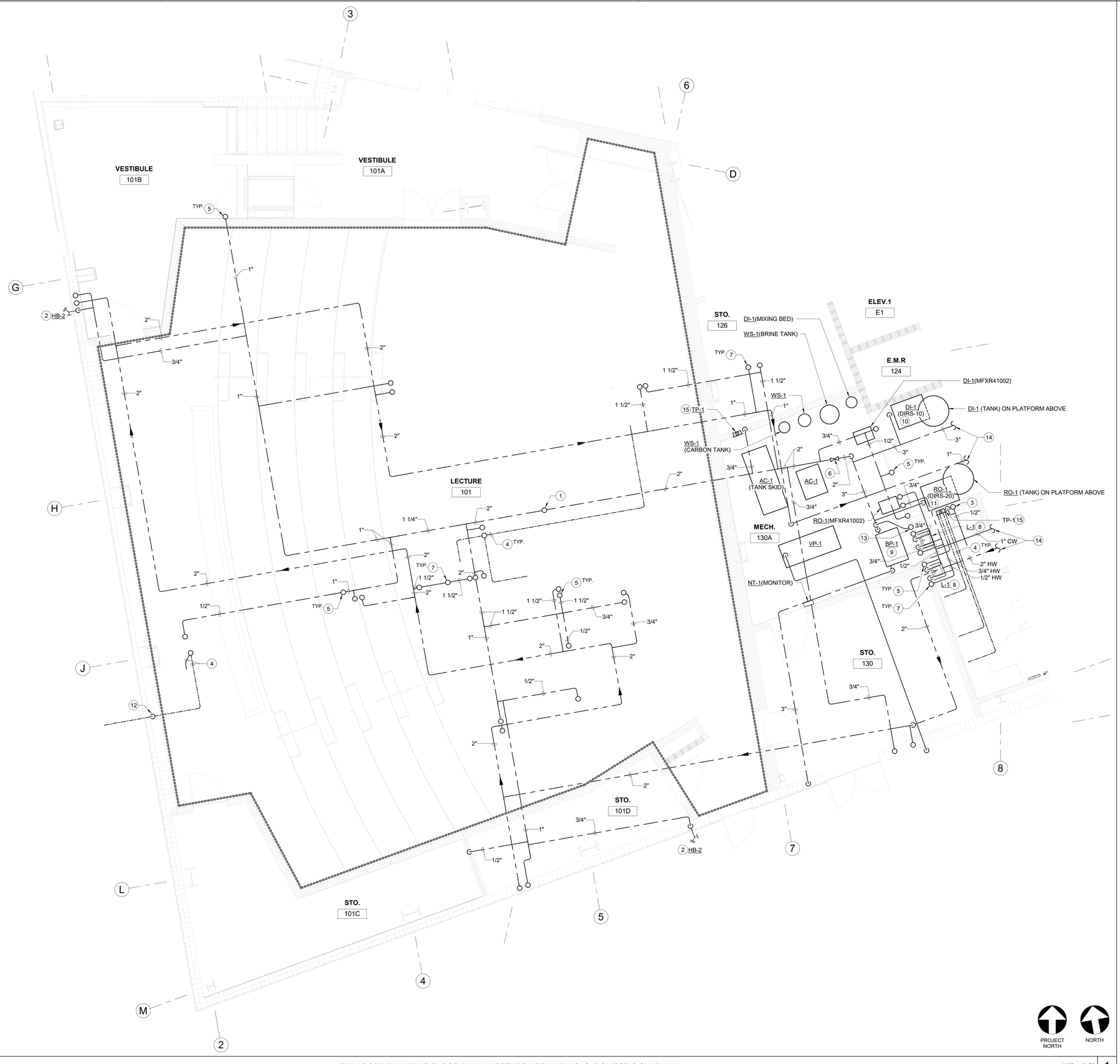

KEYNOTES

1. 3/4" CW UP TO ROOF.
2. 3/4" CW DN. IN WALL FOR HOSE BIBB AT +12" AFF.
3. 1/2" CW UP IN WALL TO SECOND FLOOR TRAP PRIMER.
4. 1/2" CW TP DN. FROM SECOND FLOOR TRAP PRIMER AND OFFSET ABV. FIRST FLOOR CLG. TO CONNECT TO SECOND FLOOR DRAINS. (TYP.)
5. CW RISER UP TO SECOND FLOOR. (TYP.)
6. CW SOV LOCATED IN CW MAIN OVERHEAD. LOCATE VALVE IN AN ACCESSIBLE LOCATION.
7. HW RISER UP TO SECOND FLOOR. (TYP.)
8. 1/2" CW & 1/2" HW DN. IN WALL FOR FIRST FLOOR LAVATORY.
9. 3" CW DN. AND CONNECT TO INLET OF CW BOOSTER PUMP SKID MOUNTED ON FLOOR SLAB. CONNECT 3" CW RISER TO PUMP SKID OUTLET. SEE 17/P800.2 FOR ANCHORAGE. SEE P801.2 FOR PIPING DETAILS.
10. 1" CW DN. FOR DI RECIRCULATION SYSTEM SKID ON FLOOR SLAB. SEE P801.2 FOR PIPING DETAILS.
11. 1-1/4" CW DN. FOR RO RECIRCULATION SYSTEM SKID ON FLOOR SLAB. SEE P801.2 FOR PIPING DETAILS.
12. ROUTE 1/2" CW TP UP IN EXTERIOR WALL, OFFSET IN SOFFIT, AND ROUTE TO SECOND FLOOR DRAIN.
13. 1-1/2" CW UP TO BOOSTER PUMP EXPANSION TANK ABOVE SECOND FLOOR CEILING. SEE P309.2 FOR CONT. SEE P801.2 FOR PIPING DIAGRAM.
14. SEE 4/P301.2 FOR CONTINUATION.
15. 1/2" CW DN. IN WALL FOR TRAP PRIMER BEHIND ACCESS PANEL AT +12" AFF.

WALL LEGEND

1 HR FIRE RATED WALL ASSEMBLY. SEE ARCH FOR DETAIL.

DENOTES EXTENT OF ACOUSTICALLY SENSITIVE AREA WITH ACOUSTICALLY TREATED WALL CONSTRUCTION. SEE ARCH DWGS FOR DETAILS AND EXACT LOCATIONS. CONTRACTOR TO ACOUSTICALLY TREAT ALL PIPE PENETRATIONS THROUGH WALL PER DETAIL 15/A865.2. ALL PIPING BELOW 2ND FLOOR DECK WITHIN ACOUSTICALLY SENSITIVE AREA TO BE PROVIDED WITH MASS LOADED VINYL NOISE BARRIER, SEE SPECIFICATIONS FOR DETAIL.

PROJECT NORTH

NORTH

ENLARGED PLUMBING FLOOR PLAN - LECTURE AREA ABV. CLG. DOMESTIC CW & HW

1/4" = 1'-0" | 1

PLOT DATE: 8/29/2025 12:08:25 PM

IDENTIFICATION STAMP
DIV. OF THE STATE ARCHITECT
APP: 02-122821 INC: 2
REVIEWED FOR
SS ☑ FLS ☑ ACS ☑
DATE: 11/20/2025

Teter, Inc. expressly reserves its common law copyright and other property rights in these plans. This document, the ideas and designs incorporated herein, as an instrument of professional service, is not to be used in whole or part, for any other project without prior written authorization.

MARK	DATE	DESCRIPTION
A.	11/13/2025	DSA BACKCHECK

TETER, INC.
FRESNO HEADQUARTERS
VISALIA | BAKERSFIELD | MODESTO | SAN LUIS OBISPO
ARCHITECTS ENGINEERS CONNECTED

VISALIA CAMPUS UNIVERSITY CENTER
COLLEGE OF THE SEQUOIAS
915 S. MOONEY BLVD
VISALIA, CALIFORNIA

DRAWING TITLE
ENLARGED PLUMBING FLOOR PLAN - LECTURE AREA ABV. CLG.
DOMESTIC COLD & HOT WATER

PROJECT NO.
22-12498

DRAWING
P306.2



KEYNOTES

1 GAS RISER UP TO SOV IN SECOND FLOOR LAB, SEE P310.2 FOR CONT.
2 GAS DROP DN. FROM SOV IN SECOND FLOOR LAB, SEE P310.2 FOR CONT.
3 GAS RISER UP TO SECOND FLOOR. (TYP.)
4 CONNECT 1" DI SUPPLY RISER TO DI RECIRCULATION SYSTEM SKID ON FLOOR SLAB. SEE 13/P800.2 FOR ANCHORAGE. SEE P801.2 FOR PIPING DETAILS.
5 1" DI RETURN DN. AND CONNECT TO DI STORAGE TANK MOUNTED ON PLATFORM OVERHEAD. SEE 9/P800.2 FOR ANCHORAGE. SEE P801.2 FOR PIPING DETAILS.
6 DI RISER UP TO SECOND FLOOR. (TYP.)
7 CONNECT 1-1/4" RO SUPPLY RISER TO RO RECIRCULATION SYSTEM SKID ON FLOOR SLAB. SEE 14/P800.2 FOR ANCHORAGE. SEE P801.2 FOR PIPING DETAILS.
8 1-1/4" RO RETURN DN. AND CONNECT TO RO STORAGE TANK MOUNTED ON PLATFORM OVERHEAD. SEE 9/P800.2 FOR ANCHORAGE. SEE P801.2 FOR PIPING DETAILS.
9 RO RISER UP TO SECOND FLOOR. (TYP.)
10 REVERSE OSMOSIS UNIT MOUNTED ON FLOOR SLAB. SEE 14/P800.2 FOR ANCHORAGE. SEE P801.2 FOR PIPING DETAILS.
11 AIR COMPRESSOR MOUNTED ON FLOOR SLAB. SEE 10/P800.2 FOR ANCHORAGE. SEE P801.2 FOR PIPING DETAILS.
12 CONNECT 1" AIR RISER TO AIR COMPRESSOR TANK SKID MOUNTED ON FLOOR SLAB. SEE 10/P800.2 FOR ANCHORAGE. SEE P801.2 FOR PIPING DETAILS.
13 AIR RISER UP TO SECOND FLOOR. (TYP.)
14 CONNECT 1-1/2" VAC RISER TO VACUUM PUMP MOUNTED ON FLOOR SLAB. SEE 15/P800.2 FOR ANCHORAGE. SEE P801.2 FOR PIPING DETAILS.
15 VAC RISER UP TO SECOND FLOOR. (TYP.)
16 WATER SOFTENER SYSTEM MOUNTED ON WALL. SEE 17/P801.2 FOR ANCHORAGE. SEE P801.2 FOR PIPING DETAILS.
17 DE-IONIZATION MIXING BED MOUNTED ON WALL. SEE 17/P801.2 FOR ANCHORAGE. SEE P801.2 FOR PIPING DETAILS.
18 3/4" N2 DN. FROM NITROGEN TANK MANIFOLD ON SECOND FLOOR AND OFFSET ABV. FIRST FLOOR CEILING. SEE P310.2 FOR CONT.
19 N2 RISER UP TO SECOND FLOOR. (TYP.)
20 CONNECT 1-1/4" PIPE TO VACUUM PUMP EXHAUST AND ROUTE OVERHEAD TO EXTERIOR WALL. TERMINATE THRU EXTERIOR WALL W/ 90° ELL DOWN. SEE 15/P800.2 FOR DETAIL.
21 1/2" HE DN. FROM HELIUM TANK REGULATOR ON SECOND FLOOR AND OFFSET ABV. FIRST FLOOR CEILING. SEE P310.2 FOR CONT.
22 1/2" AR DN. FROM ARGON TANK REGULATOR ON SECOND FLOOR AND OFFSET ABV. FIRST FLOOR CEILING. SEE P310.2 FOR CONT.
23 1/2" H2 DN. FROM HYDROGEN INERT GAS TANK REGULATOR ON SECOND FLOOR AND OFFSET ABV. FIRST FLOOR CEILING. SEE P310.2 FOR CONT.
24 1/2" P5 DN. FROM P5 GAS TANK REGULATOR ON SECOND FLOOR AND OFFSET ABV. FIRST FLOOR CEILING. SEE P310.2 FOR CONT.

WALL LEGEND

1 HR FIRE RATED WALL ASSEMBLY. SEE ARCH FOR DETAIL.

DENOTES EXTENT OF ACOUSTICALLY SENSITIVE AREA WITH ACOUSTICALLY TREATED WALL CONSTRUCTION. SEE ARCH DWGS FOR DETAILS AND EXACT LOCATIONS. CONTRACTOR TO ACOUSTICALLY TREAT ALL PIPE PENETRATIONS THROUGH WALL PER DETAIL 15/A865.2. ALL PIPING BELOW 2ND FLOOR DECK WITHIN ACOUSTICALLY SENSITIVE AREA TO BE PROVIDED WITH MASS LOADED VINYL NOISE BARRIER. SEE SPECIFICATIONS FOR DETAIL.

ENLARGED PLUMBING FLOOR PLAN - LECTURE AREA ABV. CLG. LAB PIPING AND GAS

1/4" = 1'-0" | 1

IDENTIFICATION STAMP
DIV. OF THE STATE ARCHITECT
APP: 02-122821 INC: 2
REVIEWED FOR
SS ☑ FLS ☑ ACS ☑
DATE: 11/20/2025

Teter, Inc. expressly reserves its common law copyright and other property rights in these plans. This document, the ideas and designs incorporated herein, as an instrument of professional service, is not to be used in whole or part, for any other project without prior written authorization.

MARK	DATE	DESCRIPTION
A	11/13/2025	DSA BACKCHECK

TETER, INC.
FRESNO HEADQUARTERS
VISALIA | BAKERSFIELD | MODESTO | SAN LUIS OBISPO
ARCHITECTS ENGINEERS CONNECTED

VISALIA CAMPUS UNIVERSITY CENTER
COLLEGE OF THE SEQUOIAS
915 S. MOONEY BLVD
VISALIA, CALIFORNIA

DRAWING TITLE
ENLARGED PLUMBING FLOOR PLAN - LECTURE AREA ABV. CLG. LAB PIPING AND GAS

PROJECT NO.
22-12498

DRAWING
P307.2

\\tetr-file1\Users\matt.soderstrom_TETR\Documents\12498-P-UC_matt.soderstrom.rvt
PLOT DATE: 8/29/2025 12:08:37 PM



KEYNOTES

1 SEE 3/P302.2 FOR CONT.
2 2" AW & 1-1/2" AVR FOR FUME HOOD. ROUTE AW ALONG BACK OF HOOD IN UTILITY CHASE.
3 2" AW DN. THRU FLOOR AND OFFSET ABV. FIRST FLOOR CLG. SEE P305.2 FOR CONT.
4 2" AW UP FROM FIRST FLOOR CEILING AND 1-1/2" AVR FOR FUME HOOD.
5 2" AW W/ W.C.O. & 1-1/2" AVR FOR SINK. ROUTE AW ALONG BACK OF CABINET AND DROP DN. THRU FLOOR AND OFFSET ABV. FIRST FLOOR CLG. SEE P305.2 FOR CONT.
6 2" AW W/ W.C.O. UP FROM FIRST FLOOR CEILING AND 1-1/2" AVR FOR SINK.
7 2" AW W/ W.C.O. UP FROM FIRST FLOOR CEILING AND 2" AV FOR LAB SINK. SEE 5/P800.2 FOR ISLAND VENT DETAIL. SEE P305.2 FOR AV PIPING BEL. FLR.
8 2" AW UP FROM FIRST FLOOR CEILING FOR SECOND FLOOR DRAIN. SEE P305.2 FOR 2" AV CONNECTION.
9 2" AW UP FROM FIRST FLOOR CEILING FOR SECOND FLOOR FLOOR SINK. SEE P305.2 FOR 1-1/2" AV CONNECTION.
10 2" S W/ W.C.O. UP FROM FIRST FLOOR CEILING AND 2" VR FOR SECOND FLOOR SINK.
11 2" S UP FROM FIRST FLOOR CEILING AND 1-1/2" VR FOR SECOND FLOOR LAVATORY.
12 2" S UP FROM FIRST FLOOR CEILING FOR SECOND FLOOR DRAIN. SEE P305.2 FOR 1-1/2" VENT CONNECTION.
13 2" AW UP FROM FIRST FLOOR CEILING AND 2" AVR FOR WMB-1 FOR CONNECTION TO GLASSWARE WASHER.
14 2" AW & 2" AVR FOR FUME HOOD. ROUTE AW ALONG BACK OF HOOD IN UTILITY CHASE.
15 2" AW UP FROM FIRST FLOOR CEILING FOR SECOND FLOOR SINK. SEE P305.2 FOR 2" AV CONNECTION.
16 3" AW UP FROM FIRST FLOOR CEILING W/ W.C.O. BELOW SINK. PROVIDE 2" AW CONNECTION FOR SINK AND 2" AVR.
17 2" AW UP FROM FIRST FLOOR CEILING AND 2" AVR FOR FUME HOOD.

WALL LEGEND

1 HR FIRE RATED WALL ASSEMBLY. SEE ARCH FOR DETAIL.

ENLARGED PLUMBING FLOOR PLAN - LAB AREA ABV. FLR. PIPING SEWER & VENT 1/4" = 1'-0" 1

PLOT DATE: 8/29/2025 12:08:48 PM

\\tetr-file1\Users\matt.soderstrom_TETR\Documents\12498-P-UC_matt.soderstrom.rvt

IDENTIFICATION STAMP
DIV. OF THE STATE ARCHITECT
APP: 02-122821 INC: 2
REVIEWED FOR
SS ☑ FLS ☑ ACS ☑
DATE: 11/20/2025

Teter, Inc. expressly reserves its common law copyright and other property rights in these plans. This document, the ideas and designs incorporated herein, as an instrument of professional service, is not to be used in whole or part, for any other project without prior written authorization.

MARK	DATE	DESCRIPTION
A	11/13/2025	DSA BACKCHECK

TETER, INC.
FRESNO HEADQUARTERS
VISALIA | BAKERSFIELD | MODESTO | SAN LUIS OBISPO
ARCHITECTS ENGINEERS CONNECTED

VISALIA CAMPUS UNIVERSITY CENTER
COLLEGE OF THE SEQUOIAS
915 S. MOONEY BLVD
VISALIA, CALIFORNIA

DRAWING TITLE
ENLARGED PLUMBING FLOOR PLAN - LAB AREA ABV. FLR.
SEWER & VENT

PROJECT NO.
22-12498

DRAWING
P308.2

\\tet-file1\Users\matt.soderstrom_TETER\Documents\12498-P-UC_matt.soderstrom.rvt

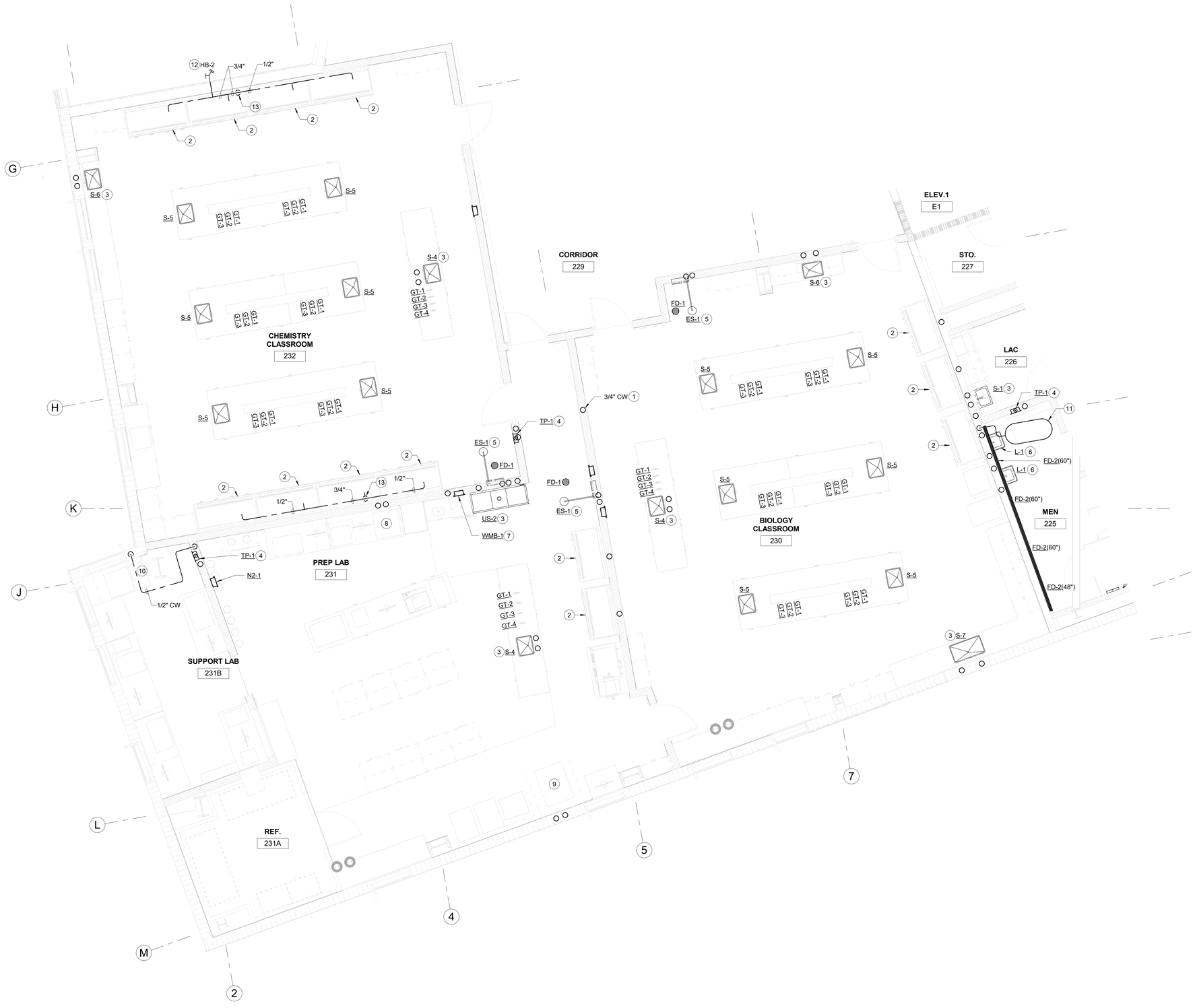

KEYNOTES

1. 3/4" CW FROM FIRST FLOOR CEILING UP THRU ROOF.
2. 1/2" CW FOR FUME HOOD.
3. 3/4" CW & 3/4" HW UP FROM FIRST FLOOR CEILING FOR SINK.
4. 1/2" CW UP FROM FIRST FLOOR CEILING FOR TRAP PRIMER BEHIND ACCESS PANEL AT +12" AFF.
5. 1-1/2" CW & 1-1/2" HW UP FROM FIRST FLOOR CEILING AND CONNECT TO THERMOSTATIC MIXING VALVE IN RECESSED STAINLESS STEEL CABINET BELOW EMERGENCY SHOWER/EYEWASH. ROUTE 1-1/2" TEPID WATER FROM MIXING VALVE OUTLET TO ES-1 INLET.
6. 1/2" CW & 1/2" HW UP FROM FIRST FLOOR CEILING FOR LAVATORY.
7. 1/2" HW UP FROM FIRST FLOOR CEILING FOR WMB-1 FOR CONNECTION TO GLASSWARE WASHER.
8. 3/4" CW & 3/4" HW UP FROM FIRST FLOOR CEILING. PROVIDE THERMOSTATIC MIXING VALVE FOR TEMPERING OF COOLING WATER AND CONNECT TO MASS SPECTROMETER WITH BALL VALVE.
9. 3/4" CW & 3/4" HW UP FROM FIRST FLOOR CEILING. PROVIDE THERMOSTATIC MIXING VALVE FOR TEMPERING OF COOLING WATER AND CONNECT TO FLOURENSCENCE SPECTROMETER WITH BALL VALVE AND EQUIPMENT MANUFACTURER PROVIDED WATER FILTER.
10. 1/2" CW DN. FROM SECOND FLOOR CEILING WITH CHICAGO LWV3-A11 WALL-MOUNTED FAUCET TO SERVICE LIQUID CHROMATOGRAPHY INSTRUMENT.
11. 1-1/2" CW UP FROM FIRST FLOOR CEILING AND OFFSET ABOVE SECOND FLOOR CEILING. CONNECT TO BOOSTER PUMP EXPANSION TANK WITH ISOLATION VALVE AND HOSE BIBB, SEE P801.2 FOR PIPING DIAGRAM. SEE 16/P801.2 FOR EXPANSION TANK ANCHORAGE.
12. 3/4" CW FROM FUME HOOD UTILITY CHASE THRU EXTERIOR WALL FOR HOSE BIBB.
13. 1" CW UP FROM FIRST FLOOR CEILING INTO FUME HOOD UTILITY CHASE.

WALL LEGEND

1 HR FIRE RATED WALL ASSEMBLY. SEE ARCH FOR DETAIL.

PROJECT NORTH

NORTH

ENLARGED PLUMBING FLOOR PLAN - LAB AREA ABV. FLR. PIPING DOMESTIC CW & HW

1/4" = 1'-0" | 1

IDENTIFICATION STAMP
DIV. OF THE STATE ARCHITECT
APP: 02-122821 INC: 2
REVIEWED FOR
SS ☑ FLS ☑ ACS ☑
DATE: 11/20/2025

Teter, Inc. expressly reserves its common law copyright and other property rights in these plans. This document, the ideas and designs incorporated herein, as an instrument of professional service, is not to be used in whole or in part, for any other project without prior written authorization.

MARK	DATE	DESCRIPTION
A	11/13/2025	DSA BACKCHECK

TETER, INC.
FRESNO HEADQUARTERS
VISALIA | BAKERSFIELD | MODESTO | SAN LUIS OBISPO
ARCHITECTS ENGINEERS CONNECTED

VISALIA CAMPUS UNIVERSITY CENTER
COLLEGE OF THE SEQUOIAS
915 S. MOONEY BLVD
VISALIA, CALIFORNIA

DRAWING TITLE
ENLARGED PLUMBING FLOOR PLAN - LAB AREA ABV. FLR.
DOMESTIC COLD & HOT WATER

PROJECT NO.
22-12498

DRAWING
P309.2

PLOT DATE: 8/29/2025 12:08:57 PM

\\tetr-file1\Users\matt.soderstrom_TETR\Documents\12498-P-UC_matt.soderstrom.rvt



KEYNOTES

1. ROUTE 1/2" RO, 1/2" A, 1/2" VAC, 1/2" G, & 1/2" N2 THRU CHASE AT BACK OF HOOD AND CONNECT TO HOOD FACTORY PIPING WITH SOV.
2. 1/2" A, 1/2" VAC, & 1/2" G UP FROM FIRST FLOOR CEILING AND CONNECT TO FUME HOOD OUTLETS WITH SOV.
3. 1/2" A, 1/2" VAC, 1/2" G, & 1/2" N2 UP FROM FIRST FLOOR CEILING FOR TEACHER'S ISLAND GAS TURRETS. SEE ARCHITECTURAL DRAWINGS FOR LAYOUT AND LOCATION OF GAS TURRETS.
4. 1/2" A, 3/4" VAC, & 1/2" G UP FROM FIRST FLOOR CEILING FOR STUDENT'S ISLAND GAS TURRETS. BRANCH 1/2" A, 1/2" VAC, & 1/2" G AND ROUTE THRU UTILITY CHASE TO OPPOSITE END OF ISLAND FOR SECOND SET OF GAS TURRETS. SEE ARCHITECTURAL DRAWINGS FOR LAYOUT AND LOCATION OF GAS TURRETS.
5. 1/2" DI UP FROM FIRST FLOOR CEILING FOR SINK.
6. 1/2" RO UP FROM FIRST FLOOR CEILING FOR SINK.
7. 1/2" DI & 1/2" RO UP FROM FIRST FLOOR CEILING FOR SINK.
8. 1" G UP FROM FIRST FLOOR CEILING AND 1" G BACK DN. TO FIRST FLOOR CEILING FOR LAB ISOLATION VALVE. INSTALL ISOLATION VALVE BEHIND STAINLESS STEEL ACCESS PANEL AT +24" AFF WITH DOOR LABELED "GAS SHUTOFF".
9. 1/2" G UP FROM FIRST FLOOR CEILING AND 1/2" G BACK DN. TO FIRST FLOOR CEILING FOR LAB ISOLATION VALVE. INSTALL ISOLATION VALVE BEHIND STAINLESS STEEL ACCESS PANEL AT +24" AFF WITH DOOR LABELED "GAS SHUTOFF".
10. 1/2" RO UP FROM FIRST FLOOR CEILING FOR WMB-1 FOR CONNECTION TO GLASSWARE WASHER.
11. CONNECT 3/4" N2 TO OUTLET OF NITROGEN TANK MANIFOLD. BRANCH ONE 3/4" N2 UP IN WALL AND OFFSET ABOVE SECOND FLOOR CEILING. BRANCH SECOND 3/4" N2 DN. IN WALL TO ABOVE FIRST FLOOR CEILING, SEE P307.2 FOR CONT. SEE 1/P801.2 FOR MANIFOLD DETAIL.
12. 1/2" N2 UP FROM FIRST FLOOR CEILING FOR CONNECTION TO SPECTROMETER. PROVIDE MATHESON SEQGTD2M LINE REGULATOR, MATHESON 6164T6FF FILTER, MATHESON 4360 QUARTER-TURN VALVE WITH 1/4" MALE OUTLET, AND NFPA LABEL FOR CONNECTION TO EQUIPMENT.
13. 1/2" HE UP FROM FIRST FLOOR CEILING FOR CONNECTION TO SPECTROMETER. PROVIDE MATHESON 4370 DIAPHRAGM VALVE, 1/8" FEMALE SWAGELOK FITTING, AND NFPA LABEL FOR CONNECTION TO EQUIPMENT.
14. 1/2" N2 DN. FROM SECOND FLOOR CEILING FOR CONNECTION TO ELECTROPHORESIS SYSTEM. PROVIDE MATHESON 4370 DIAPHRAGM VALVE, 1/8" SWAGELOK FITTING, AND NFPA LABEL FOR CONNECTION TO EQUIPMENT.
15. 1/2" AR UP FROM FIRST FLOOR CEILING & 1/2" H DN. FROM SECOND FLOOR CEILING FOR CONNECTION TO MASS SPECTROMETER. PROVIDE MATHESON 4370 DIAPHRAGM VALVE AND NFPA LABEL FOR EACH GAS FOR CONNECTION TO EQUIPMENT.
16. 1/2" DI, 1/2" AR, & 1/2" N2 DN. FROM SECOND FLOOR CEILING FOR CONNECTION TO SPECTROMETER. PROVIDE MATHESON SEQGTD2D AND SEQGTD2J LINE REGULATORS AND NFPA LABELS FOR GAS CONNECTIONS TO EQUIPMENT. PROVIDE CHICAGO 829-ACP WALL MOUNTED POLYPROPYLENE PURE WATER OUTLET LABELED FOR DI.
17. 1/2" A, 1/2" VAC, 1/2" N2, & 1/2" P5 UP FROM FIRST FLOOR CEILING FOR CONNECTION TO FLOURENSCENCE SPECTROMETER. PROVIDE MATHESON SEQGTD2B AND SEQGTD2M LINE REGULATORS WITH NFPA LABELS FOR AIR AND NITROGEN CONNECTIONS TO EQUIPMENT. PROVIDE MATHESON 4370 DIAPHRAGM VALVE AND NFPA LABEL FOR VACUUM CONNECTION TO EQUIPMENT. P5 GAS LINE REGULATOR TO BE SUPPLIED BY EQUIPMENT MANUFACTURER.
18. 1/2" A UP FROM FIRST FLOOR CEILING, PROVIDE MATHESON SEQGTD2B LINE REGULATOR, NFPA LABEL, AND 9/16" - 18 UNF MALE FITTING FOR CONNECTION TO EQUIPMENT. 1/2" N2 THRU WALL, PROVIDE MATHESON SEQGTD2M LINE REGULATOR, NFPA LABEL, AND 1/4" TUBE ADAPTER FITTING FOR CONNECTION TO EQUIPMENT. 1/2" AR THRU WALL, PROVIDE MATHESON SEQGTD2D LINE REGULATOR, NFPA LABEL, AND 1/4" TUBE ADAPTER FITTING FOR CONNECTION TO EQUIPMENT. 1/2" N2O THRU WALL, PROVIDE MATHESON SEQ633112 0-100 PSI PRESSURE GAUGE, MATHESON 4370 DIAPHRAGM VALVE, NFPA LABEL, AND 3/4" - 16 UNF MALE FITTING FOR CONNECTION TO EQUIPMENT. 1/2" C2H2 DN. FROM SECOND FLOOR CEILING, PROVIDE MATHESON SEQ632215 STAINLESS STEEL 0-15 PSI PRESSURE GAUGE, MATHESON 4370 STAINLESS STEEL DIAPHRAGM VALVE NFPA LABEL, AND 9/16" - 18 UNF LH THREAD MALE FITTING FOR CONNECTION TO ATOMIC SPECTROMETER.
19. 1/2" VAC, 1/2" N2, & 1/2" H2 UP FROM FIRST FLOOR CEILING FOR CONNECTION TO ANAEROBIC CHAMBER. PROVIDE MATHESON 4370 DIAPHRAGM VALVES AND NFPA LABELS FOR VACUUM AND H2 CONNECTIONS TO EQUIPMENT. PROVIDE MATHESON SEQGTD2M LINE REGULATOR AND NFPA LABEL FOR NITROGEN CONNECTION TO EQUIPMENT.
20. 1/2" N2 DN. FROM SECOND FLOOR CEILING, PROVIDE MATHESON SEQGTD2M LINE REGULATOR AND NFPA LABEL FOR CONNECTION TO ELECTRON MICROSCOPE.
21. CONNECT 1/2" HE TO REGULATOR OUTLET, DROP DN. IN WALL, AND OFFSET ABOVE FIRST FLOOR CEILING. SEE P307.2 FOR CONT.
22. CONNECT 1/2" AR TO REGULATOR OUTLET. BRANCH ONE 1/2" AR UP IN WALL AND OFFSET ABOVE SECOND FLOOR CEILING. BRANCH SECOND 1/2" AR DN. IN WALL AND OFFSET ABOVE FIRST FLOOR CEILING. SEE P307.2 FOR CONT.
23. CONNECT 1/2" H TO REGULATOR OUTLET, RISE UP IN WALL, AND OFFSET ABOVE SECOND FLOOR CEILING.
24. CONNECT 1/2" H2 TO REGULATOR OUTLET, DROP DOWN IN WALL, AND OFFSET ABOVE FIRST FLOOR CEILING. SEE P307.2 FOR CONT.
25. CONNECT 1/2" P5 TO REGULATOR OUTLET, DROP DOWN IN WALL, AND OFFSET ABOVE FIRST FLOOR CEILING. SEE P307.2 FOR CONT.
26. CONNECT 1/2" N2O TO REGULATOR OUTLET AND ROUTE THRU WALL TO EQUIPMENT.
27. CONNECT 1/2" C2H2 TO REGULATOR OUTLET WITH FLASH ARRESTOR, RISE UP IN WALL, AND OFFSET ABOVE SECOND FLOOR CEILING.
28. 3/4" RO, 3/4" A, 3/4" VAC, 1/2" G, & 3/4" N2 UP FROM FIRST FLOOR CEILING INTO FUME HOOD UTILITY CHASE. ROUTE HORIZONTAL IN CHASE TO EACH FUME HOOD.
29. 1" G UP FROM FIRST FLOOR CEILING AND 1" G BACK DN. TO FIRST FLOOR CEILING FOR LAB ISOLATION VALVE. INSTALL ISOLATION VALVE BEHIND STAINLESS STEEL ACCESS PANEL AT +24" AFF WITH DOOR LABELED "GAS SHUTOFF".

GENERAL NOTES

A. SEE DETAIL 16/P800.2 FOR RESTRAINT OF LAB GAS TANKS.

WALL LEGEND

1 HR FIRE RATED WALL ASSEMBLY. SEE ARCH FOR DETAIL.

PROJECT NORTH

NORTH

ENLARGED PLUMBING FLOOR PLAN - LAB AREA ABV. FLR. PIPING LAB PIPING

1/4" = 1'-0"

1

PLOT DATE: 8/29/2025 12:09:07 PM

IDENTIFICATION STAMP
DIV. OF THE STATE ARCHITECT
APP: 02-122821 INC: 2
REVIEWED FOR
SS ☑ FLS ☑ ACS ☑
DATE: 11/20/2025

Teter, Inc. expressly reserves its common law copyright and other property rights in these plans. This document, the ideas and designs incorporated herein, as an instrument of professional service, is not to be used in whole or part, for any other project without prior written authorization.

MARK	DATE	DESCRIPTION
A	11/13/2025	DSA BACKCHECK

TETER, INC.
FRESNO HEADQUARTERS
VISALIA | BAKERSFIELD | MODESTO | SAN LUIS OBISPO
ARCHITECTS ENGINEERS CONNECTED

VISALIA CAMPUS UNIVERSITY CENTER
COLLEGE OF THE SEQUOIAS
915 S. MOONEY BLVD
VISALIA, CALIFORNIA

DRAWING TITLE
ENLARGED PLUMBING FLOOR PLAN - LAB AREA ABV. FLR. LAB PIPING

PROJECT NO.
22-12498

DRAWING
P310.2

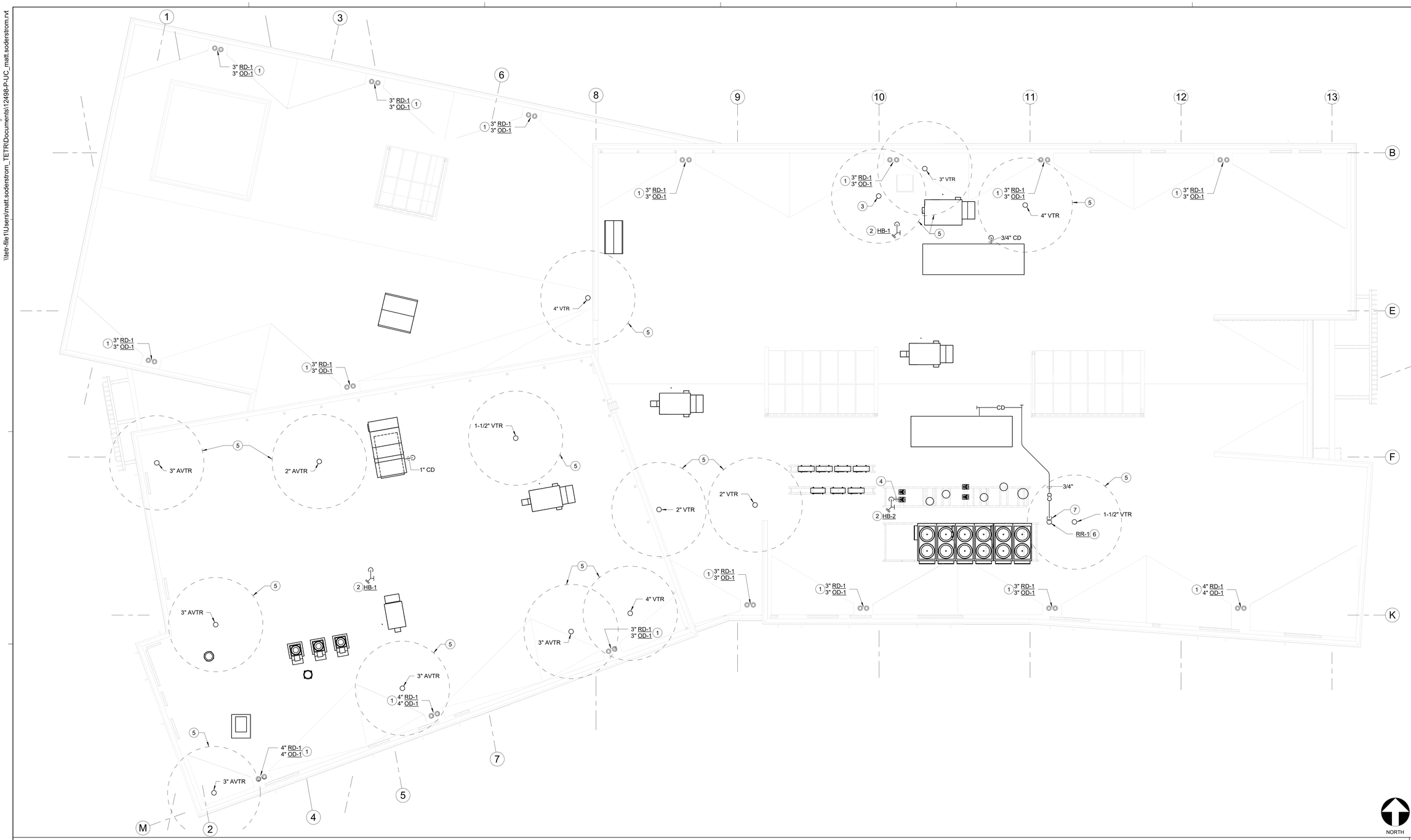

PLUMBING ROOF PLAN

1/8" = 1'-0" | 1

KEYNOTES

1. ROOF DRAIN AND OVERFLOW DRAIN. SEE ARCHITECTURAL FOR INSTALLATION DETAIL. SEE P210.2 FOR PIPING BELOW ROOF.
2. 1" CW UP THRU ROOF FOR HOSE BIBB.
3. TERMINATE 3" INTAKE & 3" FLUE FROM WATER HEATER WITH CONCENTRIC VENT ON ROOF. SEE 3/P800.2 FOR DETAIL.
4. BRANCH 3/4" CW OFF RISER FOR CONNECTION TO HYDRONIC SYSTEMS. SEE MECHANICAL DRAWINGS FOR DETAIL.
5. MAINTAIN 10'-0" MINIMUM DISTANCE FROM VTR OR FLUE TO OSA INTAKE. SEE MECHANICAL DWGS FOR OSA INTAKE LOCATIONS.
6. INSTALL ROOF RECEPTOR ON ROOF WITH 2" S W/ P-TRAP & 1-1/2" VENT CONNECTIONS BELOW ROOF.
7. TERMINATE 3/4" CD W/ 90° ELL DN. INTO ROOF RECEPTOR.

IDENTIFICATION STAMP
DIV. OF THE STATE ARCHITECT
APP: 02-122821 INC: 2
REVIEWED FOR
SS ☑ FLS ☑ ACS ☑
DATE: 11/20/2025

Teter, Inc. expressly reserves its common law copyright and other property rights in these plans. This document, the ideas and designs incorporated herein, as an instrument of professional service, is not to be used in whole or part, for any other project without prior written authorization.

MARK	DATE	DESCRIPTION
A	11/13/2025	DSA BACKCHECK

TETER, INC.
FRESNO HEADQUARTERS
VISALIA | BAKERSFIELD | MODESTO | SAN LUIS OBISPO
ARCHITECTS ENGINEERS CONNECTED

VISALIA CAMPUS UNIVERSITY CENTER
COLLEGE OF THE SEQUOIAS
915 S. MOONEY BLVD
VISALIA, CALIFORNIA

DRAWING TITLE
PLUMBING ROOF PLAN

PROJECT NO.
22-12498

DRAWING
P500.2

\\tetr-file1\Users\matt.soderstrom_TETR\Documents\12498-P-UC_matt.soderstrom.rvt
PLOT DATE: 8/29/2025 12:09:19 PM

\\tetr-file1\Users\matt.soderstrom_TETR\Documents\12498-P-UC_matt.soderstrom.rvt

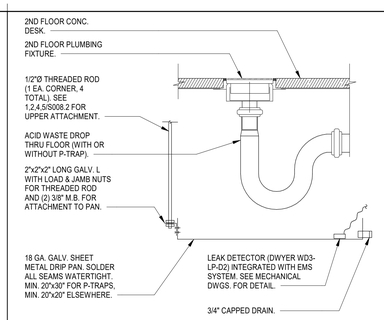

ACID WASTE LEAK DETECTION N.T.S. 21

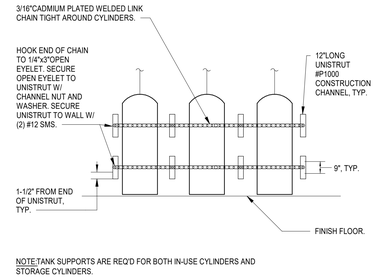

NOTE:TANK SUPPORTS ARE REQ'D FOR BOTH IN-USE CYLINDERS AND STORAGE CYLINDERS.

LAB GAS TANK ANCHORAGE N.T.S. 16

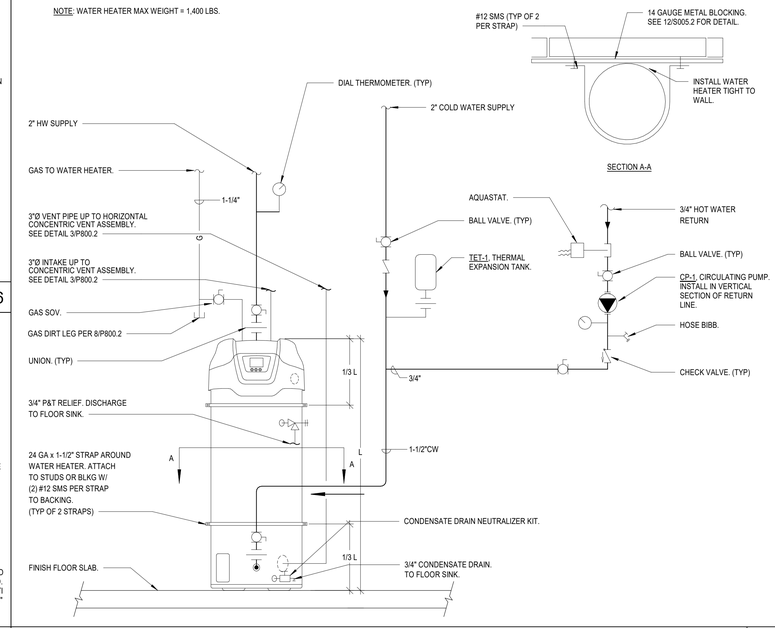

WATER HEATER ON FLOOR N.T.S. 7

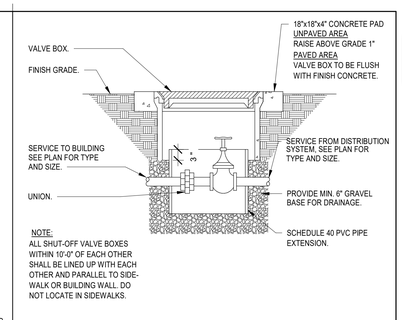

NOTE:
ALL SHUT-OFF VALVE BOXES WITHIN 10'-0" OF EACH OTHER SHALL BE LINED UP WITH EACH OTHER AND PARALLEL TO SIDE-WALK OR BUILDING WALL. DO NOT LOCATE IN SIDEWALKS.

SHUT-OFF VALVE IN BOX N.T.S. 1

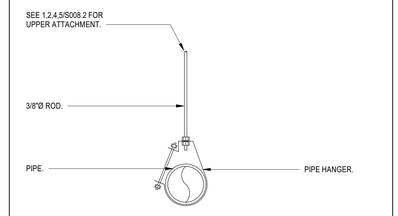

NOTE: SEE 20/P800.2 FOR SEISMIC BRACING REQUIREMENTS.

TYPICAL PIPE SUPPORT N.T.S. 22

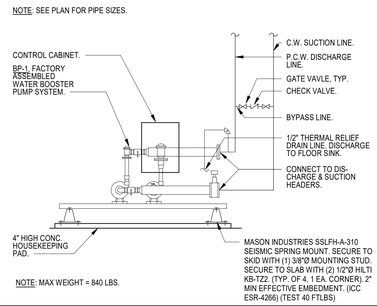

NOTE: MAX WEIGHT = 840 LBS.

BOOSTER PUMP ANCHORAGE N.T.S. 17

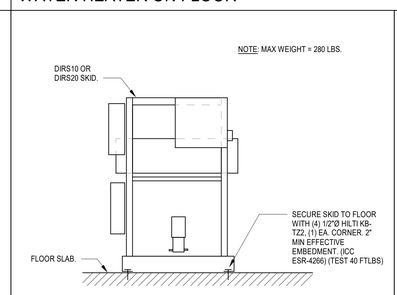

DIRS SKID ANCHORAGE N.T.S. 13

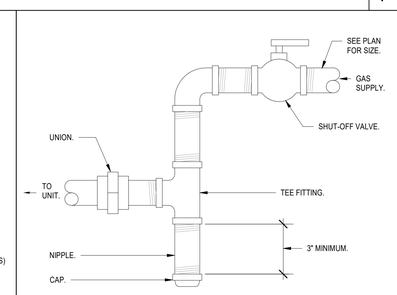

GAS DIRT LEG N.T.S. 8

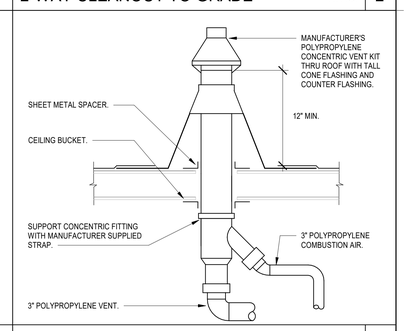

CONCENTRIC VENT DETAIL N.T.S. 3

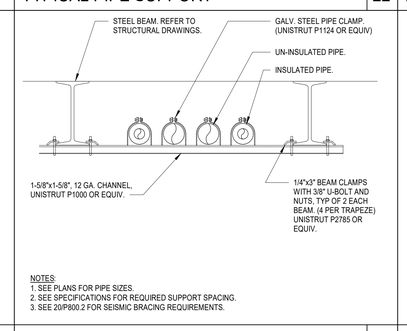

NOTES:
1. SEE PLANS FOR PIPE SIZES.
2. SEE SPECIFICATIONS FOR REQUIRED SUPPORT SPACING.
3. SEE 20/P800.2 FOR SEISMIC BRACING REQUIREMENTS.

TRAPEZE PIPE SUPPORT N.T.S. 23

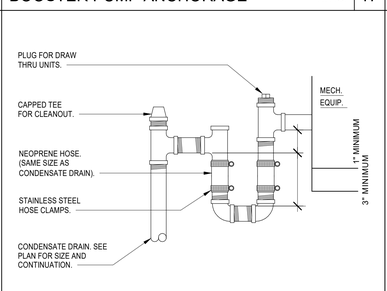

CONDENSATE DRAIN CONNECTION N.T.S. 18

VACUUM PUMP ANCHORAGE N.T.S. 15

AIR COMPRESSOR AND TANK SKID DETAIL N.T.S. 10

ISLAND SINK VENT N.T.S. 5



ROD SIZE	MAX STRUT STIFFENER LENGTH	MAX UCC SPACING	MAX UNBRACED LENGTH
3/8"	156"	28"	18"
1/2"	156"	38"	25"
5/8"	156"	48"	31"
3/4"	156"	57"	37"

THREADED ROD STIFFENER N.T.S. 29

SEISMIC BRACING UPPER ATTACHMENT T.S. 24

PIPE SIZE	ROD SIZE	MAX WEIGHT
< 4"	3/8"	30 PLF
4"	1/2"	60 PLF
> 4"	5/8"	100 PLF

NOTES:
1. SEE PLANS FOR PIPE SIZES.
2. SEE SPECIFICATIONS FOR REQUIRED SUPPORT SPACING.
3. SEISMIC BRACING NOT REQUIRED FOR PIPING SUPPORTED BY HANGERS 12" OR LESS IN LENGTH MEASURED FROM THE BOTTOM OF PIPE TO SUPPORTING STRUCTURE.
4. SEISMIC BRACING NOT REQUIRED FOR THE FOLLOWING:
   - ≤ 2" VENT, GAS, OR EMPTY SCH 40 STEEL PIPE
   - ≤ 1-1/2" SCH 40 STEEL PIPE
   - ≤ 3" VENT, GAS, OR EMPTY COPPER PIPE
   - ≤ 2" COPPER PIPE
   - ≤ 3" CAST IRON VENT
   - ≤ 2" CAST IRON SEWER OR RWL
   - ALL PIPE ≤ 1"
   - **ALL PIPES WITH HAZARDOUS CONTENTS (LAB GASES, NATURAL GAS) GREATER THAN 1" SHALL REQUIRE SEISMIC BRACING.
5. PROVIDE TRANSVERSE BRACES AT EACH END OF EACH STRAIGHT RUN OF PIPE AND AT MAX 27'-0" O.C. FOR STEEL & COPPER PIPE AND MAX 10'-0" FOR CAST IRON PIPE.
6. PROVIDE MIN ONE LONGITUDINAL BRACE PER STRAIGHT RUN OF PIPE. MAX SPACING FOR CAST IRON PIPE IS 19'-0" O.C.

REVERSE OSMOSIS SKID N.T.S. 14

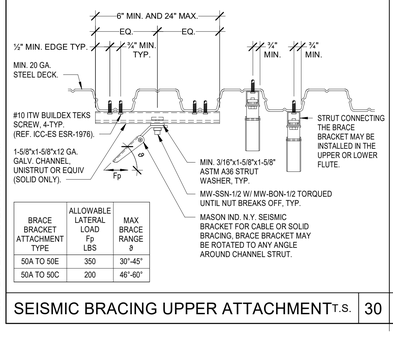

BRACE BRACKET ATTACHMENT TYPE	ALLOWABLE LATERAL LOAD Fp LBS	MAX BRACE RANGE θ
50A TO 50E	350	30°-45°
50A TO 50C	200	46°-60°

SEISMIC BRACING UPPER ATTACHMENT T.S. 30

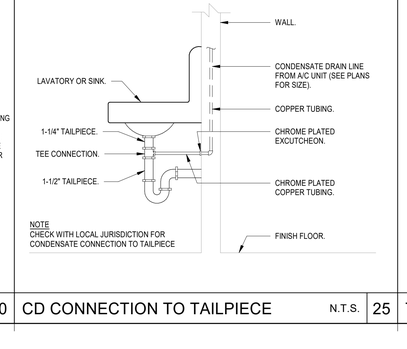

NOTE
CHECK WITH LOCAL JURISDICTION FOR CONDENSATE CONNECTION TO TAILPIECE

CD CONNECTION TO TAILPIECE N.T.S. 25

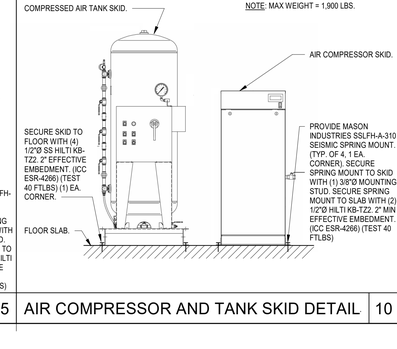

STORAGE TANK ANCHORAGE N.T.S. 9

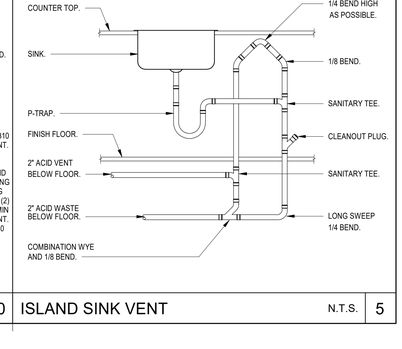

NOTE:
SIGN TO BE CONSPICUOUSLY LOCATED ABOVE BUILDING GAS SHUT-OFF VALVE AS INDICATED ON FLOOR PLAN.

GAS VALVE SIGN N.T.S. 4

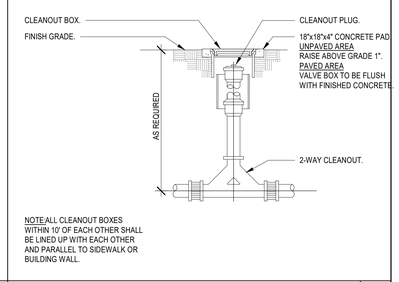

NOTE:ALL CLEANOUT BOXES WITHIN 10' OF EACH OTHER SHALL BE LINED UP WITH EACH OTHER AND PARALLEL TO SIDEWALK OR BUILDING WALL.

2-WAY CLEANOUT TO GRADE N.T.S. 2

PLOT DATE: 11/5/2025 10:37:14 AM

IDENTIFICATION STAMP
DIV. OF THE STATE ARCHITECT
APP: 02-122821 INC: 2
REVIEWED FOR
SS ☑ FLS ☑ ACS ☑
DATE: 11/20/2025

Teter, Inc. expressly reserves its common law copyright and other property rights in these plans. This document, the ideas and designs incorporated herein, as an instrument of professional service, is not to be used in whole or in part, for any other project without prior written authorization.

MARK	DATE	DESCRIPTION
A	11/13/2025	DSA BACKCHECK

TETER, INC.
ARCHITECTS ENGINEERS CONNECTED
FRESNO HEADQUARTERS
VISALIA | BAKERSFIELD | MODESTO | SAN LUIS OBISPO

VISALIA CAMPUS UNIVERSITY CENTER
COLLEGE OF THE SEQUOIAS
915 S. MOONEY BLVD
VISALIA, CALIFORNIA

DRAWING TITLE
PLUMBING DETAILS

PROJECT NO.
22-12498

DRAWING
P800.2

\\tetr-file1\Users\matt.soderstrom_TETR\Documents\12498-P-UC_matt.soderstrom.rvt

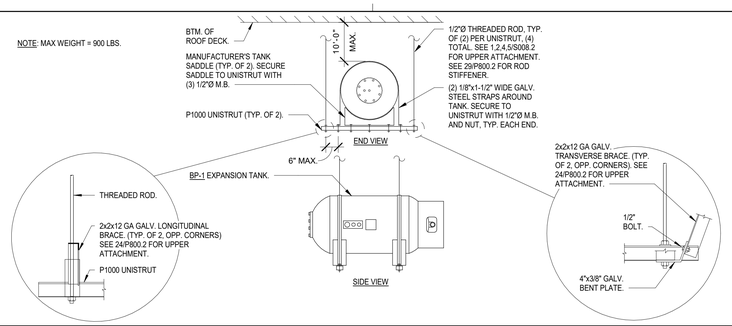

EXPANSION TANK ANCHORAGE N.T.S. 16

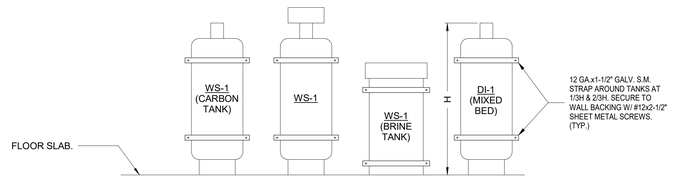

WATER SOFTENER & DI TANK MOUNTING N.T.S. 17

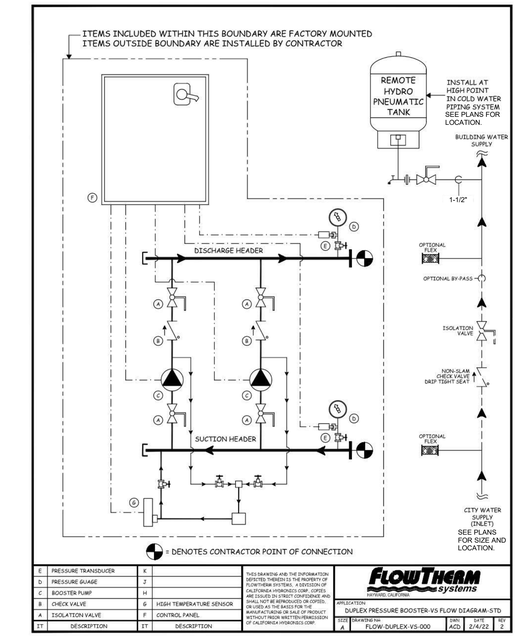

DOMESTIC WATER BOOSTER PUMP PIPING DIAGRAM N.T.S. 7

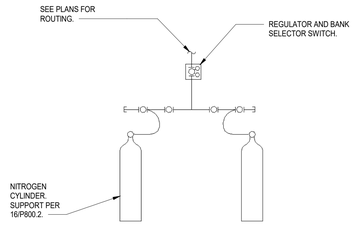

NITROGEN TANK MANIFOLD DIAGRAM N.T.S. 1

RO & DI SYSTEM PIPING DIAGRAM N.T.S. 25

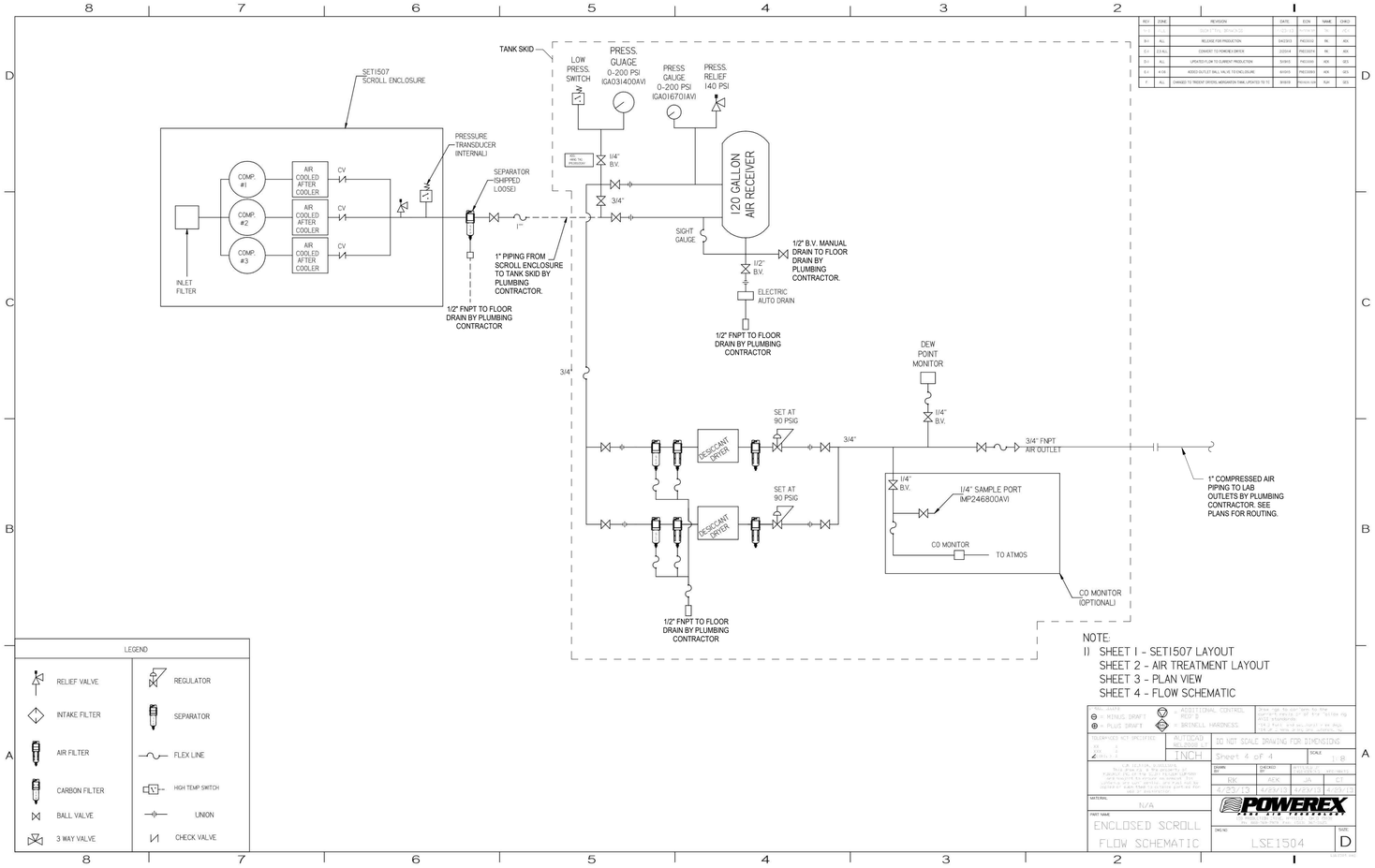

REV	ZONE	REVISION	DATE	ECN	NAME	CHKD
F	ALL	ADDED OUTLET DRILL VALVE TO ENCLOSURE	9/19/19	TRC01993	KR	SES
E.1	A1.6	ADDED OUTLET DRILL VALVE TO ENCLOSURE	9/19/19	TRC01993	KR	SES
E	ALL	CHANGED TO "REDAY" DESIGN, MERGED WITH TANK, UPDATED TO 15	9/18/19	Ticket no.	RJH	SES
D.1	ALL	RELEASE FOR PRODUCTION	04/13/17	TRC01912	RK	KRK
D	A1.6	CONVERT TO POWEREX DESIGN	2/20/14	TRC01874	RK	KRK
B.1	ALL	UPDATED FLOW TO SURESKY PRODUCTION	3/18/13	TRC1595	KRK	SES
B.1	A1.6	ADDED OUTLET DRILL VALVE TO ENCLOSURE	8/17/15	TRC01993	KRK	SES
A	ALL	RELEASE FOR PRODUCTION	11/13/2025	DSA BACKCHECK		

NOTE:
1) SHEET 1 - SET1507 LAYOUT
SHEET 2 - AIR TREATMENT LAYOUT
SHEET 3 - PLAN VIEW
SHEET 4 - FLOW SCHEMATIC

MATERIAL	N/A
PART NAME	ENCLOSED SCROLL FLOW SCHEMATIC
DRAWN BY	RK
CHECKED	AEK
ENG APPR.	JJH
MFG APPR.	KF
DATE	4/23/13
DWG NO.	LSE1504
SIZE	D
SCALE	NTS

POWEREX MOTION CONTROL

PLOT DATE: 8/29/2025 12:09:31 PM

IDENTIFICATION STAMP
DIV. OF THE STATE ARCHITECT
APP: 02-122821 INC: 2
REVIEWED FOR
SS ☑ FLS ☑ ACS ☑
DATE: 11/20/2025

Teter, Inc. expressly reserves its common law copyright and other property rights in these plans. This document, the ideas and designs incorporated herein, as an instrument of professional service, is not to be used in whole or part, for any other project without prior written authorization.

MARK	DATE	DESCRIPTION
A	11/13/2025	DSA BACKCHECK

TETER, INC.
ARCHITECTS ENGINEERS CONNECTED
FRESNO HEADQUARTERS
VISALIA | BAKERSFIELD | MODESTO | SAN LUIS OBISPO

VISALIA CAMPUS UNIVERSITY CENTER
COLLEGE OF THE SEQUOIAS
915 S. MOONEY BLVD
VISALIA, CALIFORNIA

DRAWING TITLE
PLUMBING DETAILS

PROJECT NO.
22-12498

DRAWING
P801.2

\\tetr-file1\Users\matt.soderstrom_TETR\Documents\12498-P-UIC_matt.soderstrom.rvt

UL/cUL SYSTEM NO. W-L-1410

METAL PIPE THROUGH GYPSUM WALL ASSEMBLY

F-RATING = 1-HR. OR 2-HR.
T-RATING = 0-HR.
L-RATING AT AMBIENT = LESS THAN 1 CFM / SQ FT
L-RATING AT 400°F = LESS THAN 1 CFM / SQ FT

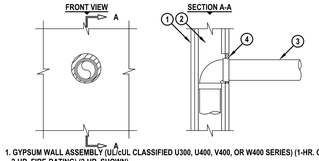

WL1410g080723

1. GYPSUM WALL ASSEMBLY (UL/cUL CLASSIFIED U300, U400, V400, OR W400 SERIES) (1-HR. OR 2-HR. FIRE-RATING) (2-HR. SHOWN).
2. [NOT SHOWN] WOOD STUDS TO CONSIST OF NOMINAL 2" x 4" LUMBER (SPACED 16" O/C). STEEL STUDS TO BE MINIMUM 3-1/2" WIDE (SPACED 24" O/C).
3. PENETRATING ITEM TO BE ONE OF THE FOLLOWING :
   A. MAXIMUM 3" NOMINAL DIAMETER STEEL PIPE (SCHEDULE 5 OR HEAVIER).
   B. MAXIMUM 3" NOMINAL DIAMETER CAST OR DUCTILE IRON PIPE.
   C. MAXIMUM 3" NOMINAL DIAMETER STEEL CONDUIT OR STEEL EMT.
   D. MAXIMUM 1" NOMINAL DIAMETER COPPER PIPE OR TUBING.
   E. MAXIMUM 1" NOMINAL DIAMETER FLEXIBLE STEEL CONDUIT.
4. MINIMUM 5/8" DEPTH HILTI FS-ONE MAX INTUMESCENT FIRESTOP SEALANT, HILTI CP 606 FLEXIBLE FIRESTOP SEALANT, HILTI CP 601S ELASTOMERIC FIRESTOP SEALANT, HILTI CFS-S SIL GG FIRESTOP SILICONE SEALANT, OR HILTI CP 618 FIRESTOP PUTTY STICK.

FIRESTOP MATERIAL	MAX DIAMETER OF OPENING	MIN ANNULAR SPACE	MAX ANNULAR SPACE
FS-ONE MAX	6"	0"	2"
CFS-S-SIL GG CP 601S CP 606 CP 618	5"	0"	1"

NOTE : [NOT SHOWN] WHEN ANNULAR SPACE IS 0", APPLY MINIMUM 1/2" BEAD HILTI SEALANT OR PUTTY AT POINT OF CONTACT.

RATED WALL MEMBRANE PENETRATION N.T.S. | 7

UL/cUL SYSTEM NO. W-L-1054

METAL PIPE THROUGH GYPSUM WALL ASSEMBLY

F-RATING = 1-HR. OR 2-HR.
T-RATING = 0-HR. OR 1/2-HR. (SEE NOTES BELOW)
L-RATING AT AMBIENT = LESS THAN 1 CFM / SQ FT
L-RATING AT 400°F = LESS THAN 1 CFM / SQ FT

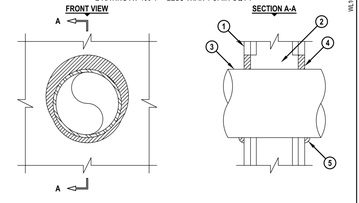

WL1054s100729

1. GYPSUM WALL ASSEMBLY (UL/cUL CLASSIFIED U300 OR U400 SERIES) (1-HR. OR 2-HR. FIRE-RATING) (2-HR. SHOWN).
2. [NOT SHOWN] WOOD STUDS TO CONSIST OF NOMINAL 2" x 4" LUMBER. STEEL STUDS TO BE MINIMUM 2-1/2" WIDE (SEE NOTE BELOW).
3. PENETRATING ITEM TO BE ONE OF THE FOLLOWING :
   A. MAXIMUM 30" DIAMETER STEEL PIPE (SCHEDULE 10 OR HEAVIER).
   B. MAXIMUM 30" DIAMETER CAST IRON PIPE.
   C. MAXIMUM 6" NOMINAL DIAMETER COPPER PIPE.
   D. MAXIMUM 6" NOMINAL DIAMETER STEEL CONDUIT.
   E. MAXIMUM 4" NOMINAL DIAMETER STEEL EMT.
   F. MAXIMUM 2" NOMINAL DIAMETER ALUMINUM EMT.
   G. MAXIMUM 2" NOMINAL DIAMETER ALUMINUM CONDUIT.
   H. MAXIMUM 2" NOMINAL DIAMETER ALUMINUM PIPE (SCH. 5 OR HEAVIER)
4. MINIMUM 5/8" DEPTH HILTI FS-ONE MAX INTUMESCENT FIRESTOP SEALANT.
5. MINIMUM 1/2" BEAD HILTI FS-ONE MAX INTUMESCENT FIRESTOP SEALANT APPLIED AT POINT OF CONTACT.

NOTES : 1. MAXIMUM DIAMETER OF OPENING :
A. 32-1/4" FOR STEEL STUD WALLS.
B. 14-1/2" FOR WOOD STUD WALLS.
2. ANNULAR SPACE (PENETRATIONS 3A THROUGH 3E) = MINIMUM 0", MAXIMUM 2-1/4".
3. ANNULAR SPACE (PENETRATIONS 3F THROUGH 3H) = MINIMUM 0", MAXIMUM 1-1/2".
4. PENETRATIONS 3A THROUGH 3E MAY BE INSTALLED WITH CONTINUOUS POINT OF CONTACT.
5. WHEN PENETRATIONS 3F THROUGH 3H ARE INSTALLED, STEEL STUDS TO BE MINIMUM 3-5/8" WIDE.
6. WHEN PENETRATIONS 3F THROUGH 3H ARE INSTALLED, T-RATING IS 1/2-HR.
7. WHEN PENETRATIONS 3F THROUGH 3H ARE INSTALLED, THE F-RATING IS 0-HR. UNDER THE CAN/ULC-S115 TESTING STANDARD.

METAL PIPE THRU RATED WALL N.T.S. | 2

UL/cUL SYSTEM NO. W-L-5029

INSULATED METAL PIPE THROUGH GYPSUM WALL ASSEMBLY

F-RATING = 1-HR., 2-HR., OR 3-HR.
T-RATING = 0-HR., 1/2-HR., 1-HR., OR 1-1/4-HR. (SEE UL FIRE RESISTANCE DIRECTORY)
L-RATING AT AMBIENT = 4 CFM / SQ FT
L-RATING AT 400° F = LESS THAN 1 CFM / SQ FT

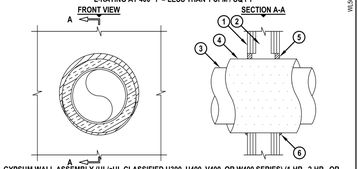

WL5029s101415

1. GYPSUM WALL ASSEMBLY (UL/cUL CLASSIFIED U300, U400, V400, OR W400 SERIES) (1-HR., 2-HR., OR 3-HR. FIRE-RATING) (3-HR. SHOWN).
2. [NOT SHOWN] WOOD STUDS TO CONSIST OF NOMINAL 2" x 4" LUMBER. STEEL STUDS TO BE MINIMUM 2-1/2" (FOR 1-HR. OR 2-HR. FIRE-RATING) OR 3-1/2" (FOR 3-HR. FIRE-RATING) WIDE.
3. PENETRATING ITEM TO BE ONE OF THE FOLLOWING :
   A. MAXIMUM 12" NOMINAL DIAMETER STEEL PIPE (SCHEDULE 10 OR HEAVIER).
   B. MAXIMUM 12" NOMINAL DIAMETER CAST OR DUCTILE IRON PIPE.
   C. MAXIMUM 6" NOMINAL DIAMETER COPPER PIPE OR TUBING (FOR 3-HR. WALLS, COPPER PIPE OR TUBING SHALL BE MAXIMUM 4" NOMINAL DIAMETER).
4. NOMINAL 1", 1-1/2" OR 2" THICK GLASS-FIBER PIPE INSULATION OR MAXIMUM 2" THICK CALCIUM SILICATE PIPE INSULATION (SEE NOTE NO. 4 BELOW).
5. HILTI FS-ONE MAX OR FS-ONE INTUMESCENT FIRESTOP SEALANT :
   A. MINIMUM 5/8" DEPTH REQUIRED FOR 1-HR. OR 2-HR. FIRE-RATING.
   B. MINIMUM 1" DEPTH REQUIRED FOR 3-HR. FIRE-RATING.
6. MINIMUM 1/2" BEAD HILTI FS-ONE MAX OR FS-ONE INTUMESCENT FIRESTOP SEALANT APPLIED AT POINT OF CONTACT.

NOTES : 1. MAXIMUM DIAMETER OF OPENING = 18-5/8".
2. ANNULAR SPACE (FOR 1-HR. OR 2-HR. FIRE-RATING) = MINIMUM 0", MAXIMUM 1-7/8".
3. ANNULAR SPACE (FOR 3-HR. FIRE-RATING) = MINIMUM 0", MAXIMUM 1-1/4".
4. WHEN CALCIUM SILICATE PIPE INSULATION IS USED, SECURE INSULATION TO PIPE WITH STAINLESS STEEL BANDS OR MINIMUM 18 AWG STAINLESS STEEL WIRE AT MAXIMUM 12" O.C.

INSUL. METAL PIPE THRU RATED WALL N.T.S. | 4

IDENTIFICATION STAMP
DIV. OF THE STATE ARCHITECT
APP: 02-122821 INC: 2
REVIEWED FOR
SS ☑ FLS ☑ ACS ☑
DATE: 11/20/2025

Teter, Inc. expressly reserves its common law copyright and other property rights in these plans. This document, the ideas and designs incorporated herein, as an instrument of professional service, is not to be used in whole or in part, for any other project without prior written authorization.

MARK	DATE	DESCRIPTION
A.	11/13/2025	DSA BACKCHECK

TETER, INC.
ARCHITECTS ENGINEERS CONNECTED
FRESNO HEADQUARTERS
VISALIA | BAKERSFIELD | MODESTO | SAN LUIS OBISPO

VISALIA CAMPUS UNIVERSITY CENTER
COLLEGE OF THE SEQUOIAS
915 S. MOONEY BLVD
VISALIA, CALIFORNIA

DRAWING TITLE
PLUMBING DETAILS

PROJECT NO.
22-12498

DRAWING
P802.2

PLOT DATE: 8/29/2025 12:09:32 PM

\\tet-file1\Users\matt.soderstrom_TETER\Documents\12498-P-UC_matt.soderstrom.rvt
PLOT DATE: 8/29/2025 12:09:38 PM

A. GENERAL INFORMATION

01	Project Location (city)	Visalia	02	Climate Zone	13
03	Occupancy Types Within Project (select all that apply):				

● Auditorium ● Classroom ● Office

B. PROJECT SCOPE

This table includes domestic water heating systems that are within the scope of the permit application and are demonstrating compliance using the prescriptive paths outlined in 140./ 170.2(d) and 141.0(a)/ 180.1, or 141.0(b)2N / 180.2 for additions or alterations. Solar water heating systems are documented on the NRCC-SAB compliance document. Combined hydronic water heating systems are documented on the NRCC-MCH compliance document.

01	02	03		
My project consists of (check all that apply):	System Type[1,2]	System Components		
☒ New system (DHW system being installed for the first time)	Central System (serving nonresidential spaces)	☒ Equipment	☒ Distribution	☒ Controls
☐ System Alteration (equipment, distribution or controls)		☐ Equipment	☐ Distribution	☐ Controls

[1] *FOOTNOTES: Point of use water heaters, or other non-central systems used to serve nonresidential spaces, are considered individual systems.*
[2] *Dwelling units refers to hotel/motel guest rooms and units in a multifamily residential occupancy.*
[3] *DHW systems serving 2 or more dwelling units are considered "Central Systems" for multifamily occupancies*

C. COMPLIANCE RESULTS

Table C will indicate if the project data input into the compliance document is compliant with water heating requirements. If this table says "DOES NOT COMPLY" or "COMPLIES with Exceptional Conditions" refer to Table D. or the table indicated as not compliant for guidance.

01	02	03	04
Domestic Hot Water Equipment	Distribution Systems	Controls	**Compliance Results**
Table F	Table G	Table H	
Yes	Yes	Yes	COMPLIES

D. EXCEPTIONAL CONDITIONS

This table is auto-filled with uneditable comments because of selections made or data entered in tables throughout the form.

E. ADDITIONAL REMARKS

This table includes remarks made by the permit applicant to the Authority Having Jurisdiction.

F. DOMESTIC HOT WATER EQUIPMENT

This table is used to demonstrate compliance with mandatory equipment requirements in 110.1 and 110.3. Compliance with prescriptive requirements in 140.5(c) / 170.2(d) must also be demonstrated and with 141.0 / 180.1/ 180.2 for addition and alteration scopes.

Equipment Schedule: Water Heating Efficiency and Standby Loss

03		04			05		06		
System Name	WH-1	Exception to 140.5(c)/ 170.2(d)3		Exceptions Do Not Apply	☐	Gas Service Water Heating System >= 1MMBtu/h[1]	Capacity-weighted Average Efficiency %		
07	08	09	10		11	12	13	14	15
Name or Item Tag	Equipment Type	Volume (gal)	Rated Input Capacity (Btu/h)	Max GPM/ First Hour Rating (FHR)	Rated Efficiency	Minimum Efficiency Required	Efficiency Unit	Designed Standby Loss	Maximum Standby Loss
WH-1	Commercial Gas Storage Water Heater	100	150,000		0.98	0.8	TE	1,100	5,687.5

[1] *FOOTNOTE: In systems >= 1MMBtu/h with multiple units, gas water heaters with input capacity > 100,000 Btu/h may meet 90% Et requirements via an input capacity-weighted average.*
[2] *FOOTNOTE: Compliant equipment may be found in the Modernized Appliance Efficiency Database System (MAEDBS) on the Energy Commission website: https://cacertappliances.energy.ca.gov/Pages/Search/AdvancedSearch.aspx*

Water Heating Equipment All Occupancies

	Yes	No	Not Applicable	Requirement
18	☐	☐	☒	Unfired storage tank insulation shall have Internal + External >=R-16 OR External >=R-3.5. Label required per 110.3(c)3
19	☐	☐	☒	New state buildings 60% of energy for service water heating from site solar energy or recovered energy per 110.3(c)5
20	☐	☐	☒	Isolation valves for instantaneous water heater with input rating >6.8 kBTUH or 2 kW has been specified per 110.3(c)6
21	☐	☐	☒	School buildings < 25,000 ft^2 and < 4 stories must install a heat pump water heating system per 140.5(a)1. Water heating systems serving an individual bathroom space may be an instantaneous electric water heater.

G. DOMESTIC HOT WATER DISTRIBUTION SYSTEM

This table is used to demonstrate compliance for nonresidential occupancies with distribution requirements in 120.3 and 140.5. For multifamily and hotel/motel occupancies, compliance is demonstrated with requirements 110.3(c), 160.4, 170.2(d).

Recirculation Loops in Central Systems Serving Dwelling Units or Nonresidential Spaces

	Yes	No	Not Applicable	Requirement
01	●	○	○	Air release valve or vertical pump installation per 110.3(c)4A
02	●	○	○	Check valve or similar located between recirculation pump and water heating equipment to prevent backflow per 110.3(c)4B
03	●	○	○	Hose bibb installed between pump and equipment and isolation valve between hose bibb and equipment per 110.3(c)4C
04	●	○	○	Isolation valves on both sides of the pump per 110.3(c)4D
05	●	○	○	Cold water and recirculation loop piping shall not be connected to the hot water storage tank drain port per 110.3(c)4E
06	●	○	○	Check valve installed on cold water supply between hot water system and next closest tee on cold water supply per 110.3(c)4F
07	○	○	●	DWELLING UNITS ONLY: For central systems serving multiple dwelling units, design includes a recirculation system serving separate dwelling units per 170.2(d) unless building has <=8 dwelling units.
08	○	○	●	DWELLING UNITS ONLY: For heat pump water heating systems, the hot water return from the recirculation loop shall connect to a recirculation loop tank and shall not directly connect to the primary heat pump water heater inlet or the primary thermal storage tanks per 170.2(d)2A.
09	○	○	●	DWELLING UNITS ONLY: For heat pump water heating systems, the fuel source for the recirculation loop tank shall be electricity if auxiliary heating is needed. The recirculation loop heater shall be capable of multi-pass water heating operation per 170.2(d)2B.

G. DOMESTIC HOT WATER DISTRIBUTION SYSTEM

Mandatory Pipe Insulation All Occupancies

13	☐	For systems serving dwelling units, pipe insulation must meet the minimum insulation requirements in Table 160.4-A (see blow) except: • Piping that penetrates framing members shall not be required to have pipe insulation for the distance of the framing penetration. Piping that penetrates metal framing shall use grommets, plugs, wrapping or other insulating material to assure that no contact is made with the metal framing. Insulation shall abut securely against all framing members • Piping installed in interior or exterior walls shall not be required to have pipe insulation if all of the requirements are met for compliance with Quality Insulation Installation (QII) as specified in the Reference Residential Appendix RA3.5. • Piping surrounded with a minimum of 1 inch of wall insulation, 2 inches of crawlspace insulation, or 4 inches of attic insulation, shall not be required to have pipe insulation.
14	☒	For systems serving nonresidential spaces, pipe insulation for the following applications is specified to comply with Table 120.3-A (see below) per 120.3: • Recirculating system piping, including supply and return piping of the water heater • The first 8 ft of hot and cold outlet piping, including between storage tank and heat trap, for a nonrecirculating storage system • Pipes that are externally heated
15	☒	Insulation shall be protected from damage, including that due to sunlight, moisture, equipment maintenance, and wind. Insulation exposed to weather shall be installed with a cover suitable for outdoor service per 120.3(b) / 160.4(f). Pipe insulation buried below grade must be installed in a water proof and non-crushable casing or sleeve.

TABLE 120.3-A / 160.4-A PIPE INSULATION THICKNESS

Fluid Temperature Range (°F)	Conductivity Range (Btu-in per hour per ft^2 per °F)	Insulation Mean Rating Temp (°F)	Nominal Pipe Diameter (in)			
			< 1	1 to < 1.5	1.5 to < 4	1.5 to < 4 Multifamily & Hotel/Motel
			Minimum Insulation Required			
105-140	0.22 - 0.28	100	1.0 in or R-7.7	1.5 in or R-12.5	1.5 in or R-11	2.0 in or R-16

H. DOMESTIC HOT WATER CONTROLS

This table is used to demonstrate compliance with control requirements in 110.3 for all occupancies. For multifamily residential and hotel/motel occupancies, compliance is also demonstrated with requirements in 160.4(e) / 170.2(d).

	Yes	No	Not Applicable	Requirement
01	☒	☐	☐	Construction documents require manufacturer certification that service water-heating systems are equipped with automatic temperature controls capable of adjusting temperature settings per 110.3(a).
02	☐	☐	☒	Systems with capacity > 167,000 BTUH equipped with outlet temperature controls per 110.3(c)1 unless covered by California Plumbing Code 613.0.
03	☒	☐	☐	Controls for circulating pumps or electrical heat trace systems are capable of automatically turning off the system per §110.3(c)2 unless systems serves healthcare facility.
04	☐	☐	☒	For recirculation systems serving multiple dwelling units, design includes automatic pump controls per 170.2(d) or 180.1(b)3 for additions.
05	☐	☐	☒	For recirculation systems serving individual dwelling units, design includes manual on/off controls as specified in Reference Appendix RA4.4.9 per 170.2(d).
06	☐	☐	☒	Combustion air positive shut-off shall be provided per 160.4(3).on all newly installed commercial boilers as follows: • Boilers with input capacity >= 2.5 MMBtu/h, in which the boiler is designed to operate with a nonpositive vent static pressure • Boilers where one stack serves two or more boilers with a total combined input capacity per stack of 2.5 MMBtu/h.
07	☐	☐	☒	Boiler combustion air fans with motor >= 10 hp shall meet one of the following • The fan motor shall be driven by a variable speed drive OR • The fan motor shall include controls that limit the fan motor demand to <=30% of the total design wattage at 50% of the design air volume.
08	☐	☐	☒	Newly installed boilers with an input capacity (d:gte/) 5MMBtu/h and a steady state full-load combustion efficiency < 90% shall maintain excess (stack-gas) oxygen concentrations <= 5% by volume on a dry basis over firing rates of 20-100%. Combustion air volume shall be controlled with respect to firing rate or flue gas oxygen concentration. Use of a common gas and combustion air control linkage or jack shaft is prohibited.

I. DECLARATION OF REQUIRED CERTIFICATES OF INSTALLATION

Selections have been made based on information provided in this document. If any selection have been changed by permit applicant, an explanation should be included in Table E. Additional Remarks. These documents must be provided to the building inspector during construction and can be found online

Form/Title
NRCI-PLB-E - Must be submitted for all buildings

J. DECLARATION OF REQUIRED CERTIFICATES OF ACCEPTANCE

There are no forms required for this project.

K. DECLARATION OF REQUIRED CERTIFICATES OF VERIFICATION

There are no forms required for this project.

DOCUMENTATION AUTHOR'S DECLARATION STATEMENT

I certify that this Certificate of Compliance documentation is accurate and complete.

Documentation Author Name: Matt Soderstrom	Documentation Author Signature: Matt Soderstrom
Company: TETER	Signature Date: 01/30/25
Address: 7535 N PALM AVE STE 201	CEA/ HERS Certification Identification (if applicable):
City/State/Zip: FRESNO, CA 93711	Phone: 559-437-0887

RESPONSIBLE PERSON'S DECLARATION STATEMENT

I certify the following under penalty of perjury, under the laws of the State of California:

1. The information provided on this Certificate of Compliance is true and correct.
2. I am eligible under Division 3 of the Business and Professions Code to accept responsibility for the building design or system design identified on this Certificate of Compliance (responsible designer)
3. The energy features and performance specifications, materials, components, and manufactured devices for the building design or system design identified on this Certificate of Compliance conform to the requirements of Title 24, Part 1 and Part 6 of the California Code of Regulations.
4. The building design features or system design features identified on this Certificate of Compliance are consistent with the information provided on other applicable compliance documents, worksheets, calculations, plans and specifications submitted to the enforcement agency for approval with this building permit application.
5. I will ensure that a completed signed copy of this Certificate of Compliance shall be made available with the building permit(s) issued for the building, and made available to the enforcement agency for all applicable inspections. I understand that a completed signed copy of this Certificate of Compliance is required to be included with the documentation the builder provides to the building owner at occupancy.

Responsible Designer Name: STEVEN JONES	Responsible Designer Signature: Steven Jones
Company: TETER	Date Signed: 01/30/25
Address: 7535 N PALM AVE STE 201	License: M32797
City/State/Zip: FRESNO, CA 93711	Phone: 559-437-0887

IDENTIFICATION STAMP
DIV. OF THE STATE ARCHITECT
APP: 02-122821 INC: 2
REVIEWED FOR
SS ☑ FLS ☑ ACS ☑
DATE: 11/20/2025

Teter, Inc. expressly reserves its common law copyright and other property rights in these plans. This document, the ideas and designs incorporated herein, as an instrument of professional service, is not to be used in whole or in part, for any other project without prior written authorization.

MARK	DATE	DESCRIPTION
A	11/13/2025	DSA BACKCHECK

TETER, INC.
FRESNO HEADQUARTERS
VISALIA | BAKERSFIELD | MODESTO | SAN LUIS OBISPO
ARCHITECTS ENGINEERS CONNECTED
TETER

VISALIA CAMPUS UNIVERSITY CENTER
COLLEGE OF THE SEQUOIAS
915 S. MOONEY BLVD
VISALIA, CALIFORNIA

DRAWING TITLE
TITLE 24 DOCUMENTATION

PROJECT NO.
22-12498

DRAWING
P900.2

\\tet-file1\Users\zachary.davis_TETR\Documents\12498-M-UC_zachary.davisBWYRV.rvt

PLOT DATE: 11/10/2025 4:32:20 PM

TITLE 24 ACCEPTANCE TESTING

THE CALIFORNIA ENERGY CODE SECTION 10-103 REQUIRES ACCEPTANCE TESTING ON ALL NEWLY INSTALLED LIGHTING CONTROLS, MECHANICAL SYSTEMS, ENVELOPES, AND PROCESS EQUIPMENT AFTER INSTALLATION AND BEFORE PROJECT COMPLETION. AN ACCEPTANCE TEST IS A FUNCTIONAL PERFORMANCE TEST TO HELP ENSURE THAT NEWLY INSTALLED EQUIPMENT IS OPERATING AND IN COMPLIANCE WITH THE ENERGY CODE.

LIGHTING CONTROLS ACCEPTANCE TESTS MUST BE PERFORMED BY A CERTIFIED LIGHTING CONTROLS ACCEPTANCE TEST TECHNICIAN (ATT).

MECHANICAL SYSTEMS ACCEPTANCE TESTS MUST BE PERFORMED BY A CERTIFIED MECHANICAL ATT FOR PROJECTS SUBMITTED ON OR AFTER OCTOBER 1, 2021.

ENVELOPE AND PROCESS EQUIPMENT ACCEPTANCE TESTS SHALL BE PERFORMED BY THE INSTALLING CONTRACTOR, ENGINEER/ARCHITECT OF RECORD, OR THE OWNER'S AGENT.

A LISTING OF CERTIFIED ATT CAN BE FOUND AT: https://www.energy.ca.gov/programs-and-topics/programs/acceptance-test-technician-certification-provider-program/acceptance.

THE ACCEPTANCE TESTING PROCEDUERS MUST BE REPEATED, AND DEFICIENCIES MUST BE CORRECTED BY THE BUILDER OR INSTALLING CONTRACTOR UNTIL THE CONSTRUCTION/INSTALLATION OF THE SPECIFIED SYSTEMS CONFORM AND PASS THE REQUIRED ACCEPTANCE CRITERIA.

PROJECT INSPECTORS WILL COLLECT THE FORMS TO CONFIRM THAT THE REQUIRED ACCEPTANCE TESTS HAVE BEEN COMPLETED.

MECHANICAL SHEET INDEX

M001.2 MECHANICAL LEGENDS AND NOTES
M002.2 MECHANICAL SCHEDULES
M003.2 MECHANICAL SCHEDULES
M210.2 MECHANICAL FLOOR PLAN - FIRST FLOOR
M220.2 MECHANICAL FLOOR PLAN - SECOND FLOOR
M310.2 MECHANICAL FLOOR PLAN - FIRST FLOOR PIPING
M320.2 MECHANICAL FLOOR PLAN - SECOND FLOOR PIPING
M400.2 MECHANICAL CONTROLS
M401.2 MECHANICAL CONTROLS
M402.2 MECHANICAL CONTROLS
M403.2 MECHANICAL CONTROLS
M404.2 MECHANICAL CONTROLS
M405.2 MECHANICAL CONTROLS
M410.2 MECHANICAL CONTROLS FLOOR PLAN - FIRST FLOOR
M420.2 MECHANICAL CONTROLS FLOOR PLAN - SECOND FLOOR
M500.2 MECHANICAL ROOF PLAN
M800.2 MECHANICAL DETAILS
M801.2 MECHANICAL DETAILS
M802.2 MECHANICAL DETAILS
M803.2 MECHANICAL DETAILS
M900.2 TITLE 24 DOCUMENTATION
M901.2 TITLE 24 DOCUMENTATION
M902.2 TITLE 24 DOCUMENTATION
M903.2 TITLE 24 DOCUMENTATION
M904.2 TITLE 24 DOCUMENTATION
M905.2 TITLE 24 DOCUMENTATION
M906.2 TITLE 24 DOCUMENTATION
M907.2 TITLE 24 DOCUMENTATION
M908.2 TITLE 24 DOCUMENTATION
M909.2 TITLE 24 DOCUMENTATION
M910.2 TITLE 24 DOCUMENTATION
M911.2 TITLE 24 DOCUMENTATION
M912.2 TITLE 24 DOCUMENTATION
M913.2 TITLE 24 DOCUMENTATION
M914.2 TITLE 24 DOCUMENTATION
M915.2 TITLE 24 DOCUMENTATION
M916.2 TITLE 24 DOCUMENTATION
M917.2 TITLE 24 DOCUMENTATION
M918.2 TITLE 24 DOCUMENTATION
M919.2 TITLE 24 DOCUMENTATION
M920.2 TITLE 24 DOCUMENTATION

GENERAL NOTES

1. COORDINATION OF WORK: LAYOUT OF MATERIALS, EQUIPMENT AND SYSTEMS IS GENERALLY DIAGRAMMATIC UNLESS SPECIFICALLY DIMENSIONED. SOME WORK MAY BE SHOWN OFFSET FOR CLARITY.
2. THE ACTUAL LOCATION OF ALL MATERIALS, PIPING, DUCTWORK, FIXTURES, EQUIPMENT, SUPPORTS, ETC. SHALL BE CAREFULLY PLANNED, PRIOR TO INSTALLATION OF ANY WORK TO AVOID ALL INTERFERENCES WITH EACH OTHER, OR WITH STRUCTURAL, ELECTRICAL, ARCHITECTURAL OR OTHER ELEMENTS.
3. VERIFY THE PROPER VOLTAGE AND PHASE OF ALL EQUIPMENT WITH THE ELECTRICAL PLANS. ALL CONFLICTS SHALL BE CALLED TO THE ATTENTION OF THE ARCHITECT AND THE ENGINEER PRIOR TO THE INSTALLATION OF ANY WORK OR THE ORDERING OF ANY EQUIPMENT.
4. PROVIDE ALL DUCT TRANSITION PIECES AND FITTINGS REQUIRED TO ACCOMMODATE MECHANICAL EQUIPMENT CONNECTIONS, STRUCTURE, ARCHITECTURAL ELEMENTS, AND CHANGES IN DUCT SIZES.
5. ALL DUCTWORK SHALL BE CONSTRUCTED, ERECTED AND TESTED IN ACCORDANCE WITH THE STANDARDS ADOPTED BY SMACNA AND CHAPTER 6 OF THE 2022 CMC.
6. ALL DUCTWORK AND PIPING SHALL BE INSULATED CONSISTENT WITH THE REQUIREMENTS OF THE 2022 CMC. INSULATION MATERIALS SHALL MEET THE CALIFORNIA QUALITY STANDARD PER SECTION 110.8, 120.3, AND 120.4 OF THE 2022 CALIFORNIA ENERGY CODE.
7. ALL DUCT SIZES SHOWN ARE NET INSIDE DIMENSIONS.
8. DUCTWORK SHALL BE SHEET METAL CONSTRUCTED IN COMPLETE CONFORMANCE WITH CMC LATEST EDITION, CHAPTER 6 AND THE LATEST SMACNA HVAC DUCT CONSTRUCTION STANDARDS.
9. ALL DRAWINGS AND SPECIFICATIONS ARE TO BE CONSIDERED PART OF THE CONTRACT DOCUMENTS. THE CONTRACTOR SHALL BE RESPONSIBLE FOR THE REVIEW AND COORDINATION OF ALL DRAWINGS PRIOR TO ANY CONSTRUCTION, INCLUDING ARCHITECTURAL, STRUCTURAL, MECHANICAL, PLUMBING, AND ELECTRICAL. ANY WORK PERFORMED IN CONFLICT WITH THE CONTRACT DOCUMENTS OR ANY CODE REQUIREMENT SHALL BE CORRECTED BY THE CONTRACTOR AT HIS OWN EXPENSE AND AT NO EXPENSE TO THE OWNER OR THE OWNER REPRESENTATIVE.
10. PROVIDE VOLUME DAMPERS IN ALL BRANCH DUCTS (SUPPLY, RETURN, OSA AND EXHAUST) FOR SYSTEM BALANCING.
11. HANDLE, STORE AND INSTALL ALL EQUIPMENT PER MANUFACTURER'S INSTRUCTIONS AND AS DIRECTED IN THE PROJECT MANUAL.
12. ALL AIR SYSTEMS SHALL BE TESTED, ADJUSTED AND BALANCED TO MEET THE REQUIRED FLOW. TAB METHODOLOGY SHALL BE SUBMITTED TO OWNER REPRESENTATIVE PRIOR TO IMPLEMENTATION AND IN ACCORDANCE WITH PROJECT SEQUENCING.

ANCHORAGE & BRACING NOTES

MEP COMPONENT ANCHORAGE NOTE

ALL MECHANICAL, PLUMBING AND ELECTRICAL COMPONENTS SHALL BE ANCHORED AND INSTALLED PER THE DETAILS ON THE DSA APPROVED CONSTRUCTION DOCUMENTS. THE FOLLOWING COMPONENTS SHALL BE ANCHORED OR BRACED TO MEET THE FORCE AND DISPLACEMENT REQUIREMENTS PRESCRIBED IN THE 2022 CBC, SECTIONS 1617A.1.18 THROUGH 1617A.1.26 AND ASCE 7-16 CHAPTERS 13, 26, AND 30:

1. ALL PERMANENT EQUIPMENT AND COMPONENTS.
2. TEMPORARY, MOVABLE OR MOBILE EQUIPMENT THAT IS PERMANENTLY ATTACHED (E.G. HARD WIRED) TO THE BUILDING UTILITY SERVICES SUCH AS ELECTRICITY, GAS OR WATER. "PERMANENTLY ATTACHED" SHALL INCLUDE ALL ELECTRICAL CONNECTIONS EXCEPT FOR 110/220 VOLT RECEPTACLES HAVING A FLEXIBLE CABLE.
3. TEMPORARY, MOVABLE OR MOBILE EQUIPMENT WHICH IS HEAVIER THAN 400 POUNDS OR HAS A CENTER OF MASS LOCATED 4 FEET OR MORE ABOVE THE ADJACENT FLOOR OR ROOF LEVEL THAT DIRECTLY SUPPORT THE COMPONENT IS REQUIRED TO BE RESTRAINED IN A MANNER APPROVED BY DSA.

THE FOLLOWING MECHANICAL AND ELECTRICAL COMPONENTS SHALL BE POSITIVELY ATTACHED TO THE STRUCTURE, BUT NEED NOT DEMONSTRATE DESIGN COMPLIANCE WITH THE REFERENCES NOTED ABOVE. THESE COMPONENTS SHALL HAVE FLEXIBLE CONNECTIONS PROVIDED BETWEEN THE COMPONENT AND ASSOCIATED DUCTWORK, PIPING, AND CONDUIT. FLEXIBLE CONNECTIONS MUST ALLOW MOVEMENT IN BOTH TRANSVERSE AND LONGITUDINAL DIRECTIONS:

A. COMPONENTS WEIGHING LESS THAN 400 POUNDS AND HAVE A CENTER OF MASS LOCATED 4 FEET OR LESS ABOVE THE ADJACENT FLOOR OR ROOF LEVEL THAT DIRECTLY SUPPORT THE COMPONENT.
B. COMPONENTS WEIGHING LESS THAN 20 POUNDS, OR IN THE CASE OF DISTRIBUTED SYSTEMS, LESS THAN 5 POUNDS PER FOOT, WHICH ARE SUSPENDED FROM A ROOF OR FLOOR OR HUNG FROM A WALL.

THE ANCHORAGE OF ALL MECHANICAL, ELECTRICAL AND PLUMBING COMPONENTS SHALL BE SUBJECT TO THE APPROVAL OF THE DESIGN PROFESSIONAL IN GENERAL RESPONSIBLE CHARGE OR STRUCTURAL ENGINEER DELEGATED RESPONSIBILITY AND ACCEPTANCE BY DSA. THE PROJECT INSPECTOR WILL VERIFY THAT ALL COMPONENTS AND EQUIPMENT HAVE BEEN ANCHORED IN ACCORDANCE WITH ABOVE REQUIREMENTS.

APPLICABLE CODE: 2022 CBC PER IR 16-13.

MEP DISTRIBUTION SYSTEM BRACING NOTE FOR PIPING, DUCTWORK, AND ELECTRICAL CONDUIT

PIPING, DUCTWORK, AND ELECTRICAL DISTRIBUTION SYSTEMS SHALL BE BRACED TO COMPLY WITH THE FORCES AND DISPLACEMENTS PRESCRIBED IN ASCE 7 SECTION 13.3 AS DEFINED IN ASCE 7 SECTIONS 13.6.5, 13.6.6, 13.6.7, 13.6.8; AND 2022 CBC, SECTIONS 1617A.1.24, 1617A.1.25 AND 1617A.1.26.

THE METHOD OF SHOWING BRACING AND ATTACHMENTS TO THE STRUCTURE FOR THE IDENTIFIED DISTRIBUTION SYSTEM ARE AS NOTED BELOW. THE MEP DESIGN PROFESSIONAL ENGINEER RESPONSIBLE FOR THE CONTENT ON THESE SHEETS HAS VERIFIED THAT THE DESIGN METHODS IDENTIFIED BELOW ARE IN ACCORDANCE WITH DSA IR 16-13.

MECHANICAL PIPING (MP), MECHANICAL DUCTS (MD), PLUMBING PIPING (PP), ELECTRICAL DISTRIBUTION SYSTEMS (E):

MP ☒ MD ☒ PP ☐ E ☐ - OPTION 1: PROJECT-SPECIFIC DESIGN.

MP ☐ MD ☐ PP ☐ E ☐ - OPTION 2: DESIGN BASED ON OSHPD OPM, WITHIN PROJECT SUBMITTAL.

MP ☐ MD ☐ PP ☐ E ☐ - OPTION 3: DESIGN BASED ON OSHPD OPM, DEFERRED SUBMITTAL.

LEGEND

SYMBOL	ITEM	ABBR.
	ABOVE	ABV
	ABOVE CEILING	ABV CLG
	ABOVE FINISHED FLOOR	AFF
	ALTERNATE	ALT
	AIR CONDITIONING	AC
	AIR FLOW STATION	AFS
	AIR HANDLER UNIT	AHU
	ANALOG INPUT	AI
	ANALOG OUTPUT	AO
&	AND	
	ARCHITECT / ARCHITECTURAL	ARCH
@	AT	
	BACKDRAFT DAMPER	BDD
	BELOW FINISH CEILING	BFC
	BELOW FLOOR	BEL FLR
	BELOW GRADE	BEL GR
	BLIND FLANGE	BLF
	BRITISH THERMAL UNIT	BTU
	BRITISH THERMAL UNIT PER HOUR	BTUH
	CALIFORNIA MECHANICAL CODE	CMC
	CALIFORNIA PLUMBING CODE	CPC
	CEILING	CLG
℄	CENTER LINE	
	CONTINUATION	CONT
	CUBIC FEET OF AIR PER MINUTE	CFM
	CURRENT SENSOR	CS
Φ	DIAMETER	DIA
	DIFFERENTIAL PRESSURE SWITCH	DPS
	DIGITAL INPUT	DI
	DIGITAL OUTPUT	DO
	DOWN	DN
	DRAWING	DWG
	ELECTRICAL	ELEC
	ELBOW	ELL
	EXHAUST	EXH
	EXHAUST AIR	EA
	EXHAUST FAN	EF
	EXISTING	(E)
	FEET	FT
	FLOOR	FLR
	FLOW LINE	FL
	FLOW SWITCH	FS
	GAUGE	GA
	GALLON	GAL
	GALLONS PER HOUR	GPH
	GALLONS PER MINUTE	GPM
	INSIDE DIAMETER	ID
	MAKE-UP AIR UNIT	MAU
	MAXIMUM	MAX
	MINIMUM	MIN
	NEW	(N)
	NOT IN CONTRACT	NIC
	NOT TO SCALE	NTS
#	NUMBER	NO.
	OUTSIDE AIR	OSA
	OUTSIDE DIAMETER	OD
	POUNDS	LBS
	POUNDS PER SQUARE INCH	PSI
	POUNDS PER SQUARE INCH ABSOLUTE	PSIA
	POUNDS PER SQUARE INCH GAUGE	PSIG
	POLYVINYL CHLORIDE	PVC
	PRESSURE STATION	PS
	RETURN AIR	RA
	ROOM	RM
	SUPPLY AIR	SA
	SPECIFICATION	SPEC
	SQUARE FEET	SQ FT
	STAINLESS STEEL	SS
	TEMPERATURE	TEMP
	TEMPERATURE SENSOR	TS
	THROUGH	THRU
	TYPICAL	(TYP)
	UNDER GROUND	U/G
	VARIABLE AIR VOLUME UNIT	VAV
	WITH	W/
	WITHOUT	W/O
BD	BOILER BLOWDOWN	
BF	BOILER FEED	
CF	CHEMICAL FEED	
A	COMPRESSED AIR	A
CHWS	CHILLED WATER SUPPLY	CHWS
CHWR	CHILLED WATER RETURN	CHWR
CWS	CONDENSER WATER SUPPLY	CWS
CWR	CONDENSER WATER RETURN	CWR
CW	DOMESTIC COLD WATER	
HWS	HEATING HOT WATER SUPPLY	HWS
HWR	HEATING HOT WATER RETURN	HWR
RD	REFRIGERANT DISCHARGE	RD
RL	REFRIGERANT LIQUID	RL
RS	REFRIGERANT SUCTION	RS
SCW	SOFT COLD WATER	
S	STEAM SUPPLY	S

SYMBOL	ITEM	ABBR.
CR	STEAM CONDENSATE RETURN	CR
SBD	SURFACE BLOWDOWN	
D	DRAIN	D
	PIPING CAP	
	EXISTING (DESIGNATED)	(E)
	REMOVE / DEMO EXISTING (DESIGNATED)	
	DIRECTION OF FLOW	
	SUPPLY AIR	SA
	RETURN AIR	RA
	EXHAUST AIR	EA
	PIPE/DUCT TURN DOWN	
	PIPE/DUCT TURN UP	
	ROUND DUCT (SMALLER THAN 10⌀)	
	ROUND FLEXIBLE DUCT	
	RECTANGULAR OR ROUND DUCT (10⌀ AND LARGER)	
	EXISTING DUCT (DESIGNATED)	
	REMOVE/ DEMO EXISTING DUCT (DESIGNATED)	
	DUCT WITH ACOUSTIC LINING	
	SUPPLY AIR DUCT DROP	
	SUPPLY AIR DUCT RISE	
	RETURN AIR DUCT DROP	
	RETURN AIR DUCT RISE	
	EXHAUST AIR DUCT DROP	
	EXHAUST AIR DUCT RISE	
	OUTSIDE AIR DUCT DROP	
	OUTSIDE AIR DUCT RISE	
	TURNING VANES	TV
	EXTRACTOR	
CO	CO_2 SENSOR	
DD	DUCT SMOKE DETECTOR	DD
HD	HEAT DETECTOR	HD
SD	SMOKE DETECTOR	SD
M	MOTORIZED DAMPER	
-OR-▲	FIRE DAMPER WITH LABELED ACCESS PANEL	FD
-OR-■	FIRE/SMOKE DAMPER WITH LABELED ACCESS PANEL	F/SD
	VOLUME CONTROL DAMPER WITH LOCKING QUADRANT	VCD
T	REMOTE T'STAT WITH SENSOR IN DUCT	
T AC-1	THERMOSTAT; THERMOSTAT LABEL EXAMPLE : THERMOSTAT FOR AC-1 MOUNT AT +48" AFF TO TOP OF BOX	T'STAT
	POINT OF CONNECTION TO EXISTING	POC
	BYPASS TIMER	BPT
	THERMOMETER	
	PRESSURE GAGE	
	SECURITY BARS	
	PETE'S PLUG	
	BALANCING COCK	
	BALL VALVE	
	BUTTERFLY VALVE	
	CHECK VALVE	
	CONCENTRIC REDUCER	
	TWO-WAY CONTROL VALVE	
	FLOW SWITCH	FS
	FLEXIBLE CONNECTION	FLEX
	GATE VALVE	
	GLOBE VALVE	
	INSTRUMENT WELL	
	PLUG VALVE	
	PRESSURE RELIEF VALVE	PRV
	"Y" TYPE STRAINER	
	UNION	
1	KEYNOTE	
A	GRILLE TAG	
EF 8	NEW EQUIPMENT TAG EXAMPLE: DESCRIPTION EF, MARK NUMBER 8	
2 M202	DETAIL REFERENCE EXAMPLE: DETAIL 2, SHEET M202	
3 M400	SECTION REFERENCE EXAMPLE: SECTION 3, SHEET M400	
	FIRE RATED WALL LINETYPE. SEE ARCHITECTURAL DRAWINGS.	

IDENTIFICATION STAMP
DIV. OF THE STATE ARCHITECT
APP: 02-122821 INC: 2
REVIEWED FOR
SS ☑ FLS ☑ ACS ☑
DATE: 11/20/2025

Teter, Inc. expressly reserves its common law copyright and other property rights in these plans. This document, the ideas and designs incorporated herein, as an instrument of professional service, is not to be used in whole or in part, for any other project without prior written authorization.

MARK	DATE	DESCRIPTION
A	11/13/2025	DSA BACKCHECK

TETER, INC.
FRESNO HEADQUARTERS
VISALIA | BAKERSFIELD | MODESTO | SAN LUIS OBISPO
ARCHITECTS ENGINEERS CONNECTED

VISALIA CAMPUS UNIVERSITY CENTER
COLLEGE OF THE SEQUOIAS
915 S. MOONEY BLVD
VISALIA, CALIFORNIA

DRAWING TITLE
MECHANICAL LEGENDS AND NOTES

PROJECT NO.
22-12498

DRAWING
M001.2

MECHANICAL SCHEDULES

HEAT PUMP CHILLER SCHEDULE

DESIGNATION		CH-1
ELECTRICAL		
	FLA	414.9
	VOLTS/PHASE	460/3
	MCA/MOCP	423 / 450
COOLING		
	CAPACITY (TONS)	165.3
	GPM	395
	PRESSURE DROP (FT.)	9.09
	EWT / LWT (0F)	54 / 44
	EER	8.442
	EFFICIENCY (KW/TON)	1.4214
	NPLV (KW/TON)	0.9497
	AMBIENT (0F)	105
HEATING		
	CAPACITY (MBH)	1,966
	GPM	200
	PRESSURE DROP (FT.)	2.44
	EWT / LWT (0F)	120 / 140
	COP	2.290
	AMBIENT (0F)	32
REFRIGERANT		R454B
MANUFACTURER		TRANE
TYPE		AIR COOLED
MODEL NUMBER		MASA030
MODULE QUANTITY		6
LOCATION		ROOF
OPER. WT (LBS)		16,320
ANCHORAGE DETAIL		11/M800.2
NOTES		1,2,3,4,5,6,7,8,9

1. CHILLER MUST BE CAPABLE OF OPERATION IN THE EVENT OF A PRIMARY CONTROLLER FAILURE.

2. A STRAINER SHALL BE FACTORY INSTALLED BETWEEN THE HEADER SYSTEM AND EACH EVAPORATOR AND CONDENSER INLET.

3. FACTORY INSTALLED DRAIN PANS

4. AN ELECTRONIC DISCHARGE AND MANUAL RETURN BUTTERFLY VALVE TO BE INSTALLED ON EACH EVAPORATOR AND CONDENSER FOR VPF CHILLER PLANT CONTROL.
5. CHILLER TO INCLUDE 7" TOUCHSCREEN DISPLAY.

6. CHILLER MUST COME WITH SEPARATE LOW VOLTAGE AND HIGH VOLTAGE ENCLOSURES.
7. SINGLE POINT POWER.
8. FACTORY START-UP

9. PROVIDE CHILLER WITH MANUFACTURER (3) YEARS SERVICE AGREEMENT.

FAN COIL SCHEDULE

DESIGNATION		FC 1-1	FC 1-2	FC 1-3	FC 1-4	FC 1-5	FC 1-6	FC 1-7	FC 1-8	FC 1-9	FC 1-10	FC 1-11	FC 1-12	FC 1-13	FC 1-14	FC 1-15	FC 1-16	FC 2-1	FC 2-2	FC 2-3	FC 2-4	FC 2-5	FC 2-6	FC 2-7	FC 2-8	FC 2-9	FC 2-10	FC 2-11	FC 2-12
ELEC	VOLTS/PHASE	460/3	460/3	460/3	460/3	460/3	460/3	460/3	460/3	460/3	460/3	460/3	460/3	460/3	460/3	460/3	460/3	460/3	460/3	460/3	460/3	460/3	460/3	460/3	460/3	460/3	460/3	460/3	460/3
	MCA / MOCP	3.13/15	3.13/15	1.63/15	1.63/15	3.13/15	3.13/15	3.13/15	3.13/15	4.13/15	1.63/15	1.63/15	3.13/15	3.13/15	3.13/15	6.88/15	6.88/15	6.88/15	4.13/15	3.13/15	3.13/15	3.13/15	4.13/15	3.13/15	3.13/15	3.13/15	4.13/15	6.88/15	6.88/15
		-	-	-	-	-	-	-	-	-	-	-	-	-	-	-	-	-	-	-	-	-	-	-	-	-	-	-	-
BLOWER	SUPPLY AIR (CFM)	1200	670	870	495	695	775	480	1200	2540	540	680	1200	1300	1640	3000	3000	2400	2200	1500	1100	1200	1500	1300	1700	1340	1300	1240	2900
	EXT. S P (IN. WC)	1.00	1.00	1.00	1.00	1.00	1.00	1.00	1.00	1.00	1.00	1.00	1.00	1.00	1.00	1.00	1.00	1.00	1.00	1.00	1.00	1.00	1.00	1.00	1.00	1.00	1.00	1.00	1.00
	MIN. O.S.A. (CFM)	110	175	200	60	145	150	60	600	600	60	150	600	600	600	1740	1740	1550	1600	330	330	560	600	600	600	600	600	600	600
	HP/BHP	1/0.86	1/0.725	0.5/0.449	0.5/0.315	1/0.509	1/0.683	0.5/0.275	1/0.728	1.5/1.282	0.5/0.371	0.5/0.449	1/0.728	1/0.716	1/0.870	1.5/1.472	1/0.629	1/0.728	1/0.716	1/0.870	1.5/1.472	1/0.629	1/0.728	1/0.728	1.5/1.102	3/1.538	2.7/1.896
	DRIVE	DIRECT	DIRECT	DIRECT	DIRECT	DIRECT	DIRECT	DIRECT	DIRECT	DIRECT	DIRECT	DIRECT	DIRECT	DIRECT	DIRECT	DIRECT	DIRECT	DIRECT	DIRECT	DIRECT	DIRECT	DIRECT	DIRECT	DIRECT	DIRECT	DIRECT	DIRECT	DIRECT	DIRECT
COOLING COIL	SENSIBLE (MBH)	31.16	22.54	23.96	14.4	14.53	25.13	13.32	34.19	61.21	13.68	13.89	34.19	32.24	32.24	85.86	85.86	62.55	44.93	34.19	25.59	27.42	44.12	32.24	34.19	34.19	40.54	44.86	87.85
	TOTAL (MBH)	40.55	30.76	32.15	19.74	17.89	34.09	13.71	47.73	84.83	19.16	17.15	47.73	45.35	45.35	116.55	116.55	89.29	62.32	47.73	34.65	36.8	57.13	45.35	47.73	47.73	56.68	58.02	126.72
	EADB/EAWB (oF)	78/65	78/65	78/65	78/65	75/64	75/64	75/64	75/64	75/64	75/64	75/64	75/64	75/64	75/64	78/65	78/65	75/64	75/64	75/64	75/64	75/64	75/64	75/64	75/64	75/64	75/64	75/64	75/64
	APD (IN. W.C.)	0.48	0.773	0.275	0.712	0.395	0.401	0.525	0.367	0.434	0.826	0.361	0.367	0.322	0.322	0.835	0.835	0.861	0.822	0.367	0.417	0.483	0.401	0.322	0.367	0.367	0.674	0.415	0.689
	GPM	2.1	6.13	6.41	3.93	3.56	6.79	2.73	9.51	16.91	3.82	3.42	9.51	9.04	9.04	23.23	23.23	17.79	12.42	9.51	6.9	7.33	11.39	9.04	9.51	9.51	11.3	11.56	25.25
	PD (FT)	10.1	3.66	6.64	6.15	1.82	7.38	3.22	4.87	6.27	5.83	1.69	4.87	4.48	4.48	5.88	5.88	9.27	4.1	4.87	7.6	8.47	3.01	4.48	4.87	4.87	3.46	3.09	7.84
	BRANCH SIZE (IN)	1"	1"	1"	3/4"	3/4"	1"	3/4"	1-1/4"	1-1/2"	3/4"	3/4"	1-1/4"	1-1/4"	1-1/4"	1-1/2"	1-1/2"	1-1/2"	1-1/4"	1-1/4"	1"	1"	1"	1-1/4"	1-1/4"	1-1/4"	1-1/4"	1-1/4"	1-1/4"	2"
HEATING COIL	CAP. (MBH)	28.8	32.72	24.49	20.64	16	27.28	20.24	33.38	58.69	21.79	15.6	33.38	32.13	32.13	119.93	119.93	97.4	72.16	33.38	27.6	28.8	48.4	32.1	33.4	33.4	67.1	48.9	141.0
	EADB (oF)	68	68	68	68	68	68	68.00	68.00	68.00	68.00	68.00	68.00	68.00	68.00	68.00	68.00	68.00	68.00	68.00	68.00	68.00	68.00	68.00	68.00	68.00	68.00	68.00	68.00
	APD (IN. W.C.)	0.101	0.18	0.058	0.162	0.09	0.08	0.16	0.08	0.09	0.19	0.08	0.08	0.07	0.07	0.19	0.19	0.19	0.19	0.08	0.09	0.10	0.09	0.07	0.08	0.08	0.16	0.09	0.16
	GPM	2.88	3.28	2.45	2.07	1.6	2.73	2.03	3.34	5.88	2.18	1.56	3.34	3.22	3.22	12.02	12.02	9.76	7.23	3.34	2.76	2.88	4.85	3.22	3.34	3.34	6.72	4.9	14.13
	PD (FT)	2.69	4.91	1.99	3.28	0.74	2.43	3.16	0.51	0.75	3.62	0.71	0.51	0.48	0.48	2.03	2.03	3.12	3.33	0.51	2.48	2.68	1.16	0.48	0.51	0.51	2.91	1.18	2.98
	BRANCH SIZE (IN)	3/4"	3/4"	3/4"	3/4"	3/4"	3/4"	3/4"	1"	1"	3/4"	3/4"	3/4"	3/4"	3/4"	1-1/4"	1-1/4"	1-1/4"	1"	3/4"	3/4"	3/4"	1"	3/4"	3/4"	3/4"	1"	1"	1"	1-1/4"
FILTER	TYPE	2" PLEATED	2" PLEATED	2" PLEATED	2" PLEATED	2" PLEATED	2" PLEATED	2" PLEATED	2" PLEATED	2" PLEATED	2" PLEATED	2" PLEATED	2" PLEATED	2" PLEATED	2" PLEATED	2" PLEATED	2" PLEATED	2" PLEATED	2" PLEATED	2" PLEATED	2" PLEATED	2" PLEATED	2" PLEATED	2" PLEATED	2" PLEATED	2" PLEATED	2" PLEATED	2" PLEATED	2" PLEATED
	P D (IN WC)	0.1	0.1	0.1	0.1	0.1	0.1	0.1	0.1	0.1	0.1	0.1	0.1	0.1	0.1	0.1	0.1	0.1	0.1	0.1	0.1	0.1	0.1	0.1	0.1	0.1	0.1	0.1	0.1
	EFFICIENCY	MERV 13	MERV 13	MERV 13	MERV 13	MERV 13	MERV 13	MERV 13	MERV 13	MERV 13	MERV 13	MERV 13	MERV 13	MERV 13	MERV 13	MERV 13	MERV 13	MERV 13	MERV 13	MERV 13	MERV 13	MERV 13	MERV 13	MERV 13	MERV 13	MERV 13	MERV 13	MERV 13	MERV 13	MERV 13
MANUFACTURER		TRANE	TRANE	TRANE	TRANE	TRANE	TRANE	TRANE	TRANE	TRANE	TRANE	TRANE	TRANE	TRANE	TRANE	TRANE	TRANE	TRANE	TRANE	TRANE	TRANE	TRANE	TRANE	TRANE	TRANE	TRANE	TRANE	TRANE	TRANE
TYPE		BLOWER COIL	BLOWER COIL	BLOWER COIL	BLOWER COIL	BLOWER COIL	BLOWER COIL	BLOWER COIL	BLOWER COIL	BLOWER COIL	BLOWER COIL	BLOWER COIL	BLOWER COIL	BLOWER COIL	BLOWER COIL	BLOWER COIL	BLOWER COIL	BLOWER COIL	BLOWER COIL	BLOWER COIL	BLOWER COIL	BLOWER COIL	BLOWER COIL	BLOWER COIL	BLOWER COIL	BLOWER COIL	BLOWER COIL	BLOWER COIL	BLOWER COIL
MODEL NUMBER		BCHE036	BCHE024	BCHE036	BCHE018	BCHE024	BCHE024	BCHE018	BCHE036	BCHE090	BCHE018	BCHE024	BCHE036	BCHE054	BCHE054	BCHE090	BCHE090	BCHE072	BCHE072	BCHE054	BCHE036	BCHE036	BCHE054	BCHE054	BCHE054	BCHE054	BCHE054	BCHE054	BCHE090
SERVICE		ENTRY 101A	COR 102	ADMIN 109	OFFICE 110	PROGRAM 110	PROGRAM 112	OFFICE 112	CLASSROOM 114	COMPUTER 116	OFFICE 111	PROGRAM 111	CLASSROOM 113	CLASSROOM 115	CLASSROOM 117	LECTURE 101	LECTURE 101	PREP 204	BIOLOGY 203	STEM LOFT 201	MEET 209	FACULTY 210	CLASSROOM 212	CLASSROOM 214	CLASSROOM 216	CLASSROOM 211	CLASSROOM 213	CLASSROOM 215	COMPUTER 217
OPER. WT (LBS)		220	180	220	170	170	220	170	260	360	170	170	260	260	260	420	420	370	300	260	220	220	320	260	260	260	300	340	500
ACCESSORIES		1, 2, 4, 5	1, 2, 3, 4	1, 2, 3, 4	1, 2, 4	1, 2, 4	1, 2, 4	1, 2, 4	1, 2, 4	1, 2, 3, 4	1, 2, 4	1, 2, 4	1, 2, 4	1, 2, 4	1, 2, 3, 4	1, 2, 3, 4	1, 2, 3, 4	1, 2, 3, 4	1, 2, 3, 4	1, 2, 3, 4	1, 2, 4	1, 2, 4	1, 2, 3, 4	1, 2, 4	1, 2, 3, 4	1, 2, 4	1, 2, 4	1, 2, 4	1, 2, 3, 4
ANCHORAGE DETAIL		27/M800.2	27/M800.2	27/M800.2	27/M800.2	27/M800.2	27/M800.2	27/M800.2	27/M800.2	27/M800.2	27/M800.2	27/M800.2	27/M800.2	27/M800.2	27/M800.2	27/M800.2	27/M800.2	27/M800.2	27/M800.2	27/M800.2	27/M800.2	27/M800.2	27/M800.2	27/M800.2	27/M800.2	27/M800.2	27/M800.2	27/M800.2	27/M800.2

1. SPRING ISOLATION HANGER KIT.
2. BOTTOM ACCESS FLAT FILTER.
3. FURNISH AND INSTALL DUCT SMOKE DETECTOR IN SUPPLY DUCT (SYSTEM SENSOR 'D4120' SERIES) WITH SAMPLING TUBE OF LENGTH AS REQUIRED TO MATCH DUCT DIMENSION. PROVIDE CONDUIT AND CONDUCTORS AS REQUIRED FOR UNIT SHUTDOWN UPON DETECTION OF SMOKE.
4. CONDENSATE OVERFLOW SHUTOFF SWITCH.
5. CONDENSATE LIFT PUMP, LITTLE GIANT EC-1-DV, 115V, MIN 20' LIFT, 1 GPH

PUMP SCHEDULE

DESIGNATION	P-1A, P-1B	P-2A, P-2B
HORSEPOWER	7.5	5
VOLTS/PHASE	460/3	460/3
DESCRIPTION	CHW DISTRIBUTION PUMP	HW DISTRIBUTION PUMP
RPM	1720	1567
GPM/TDH (FT.)	200/70	100/70
EFFICIENCY (%)	70.2	61.1
MANUFACTURER	BELL & GOSSETT	BELL & GOSSETT
TYPE	VERT IN-LINE	VERT IN-LINE
MODEL NUMBER	E-80 3X3X9.5C	E-80 2X2X9.5C
LOCATION	ROOF	ROOF
OPER. WT. (LBS)	300	200
ACCESSORIES	1	1
ANCHORAGE DETAIL	20/M800.2	20/M800.2

1. VARIABLE FREQUENCY DRIVE.

DOAS SCHEDULE

DESIGNATION		DOAS-1	DOAS-2	DOAS-3
ELEC	VOLTS/PHASE	460/3	460/3	460/3
	FLA/MCA/MCOP	16.2/20/25	16.2/20/25	11/13.75/20
SUPPLY FAN	AIR FLOW (CFM)	6,500	5,550	6,480
	EXT. SP (IN. WC)	2.00	2.00	1.50
	HP/BRAKE HP	7.5/6	7.5/4.97	7.5/7.1
	FAN TYPE	PLENUM	PLENUM	PLENUM
	DRIVE	DIRECT	DIRECT	DIRECT
	ISOLATOR DFLEC (IN.)	2"	2"	2"
RET/EXH FAN	AIR FLOW (CFM)	6,300	5,200	
	EXT. SP (IN. WC)	1.50	1.50	
	HP/BRAKE HP	5/4.23	5/2.89	
	FAN TYPE	PLENUM	PLENUM	
	DRIVE	DIRECT	DIRECT	
	ISOLATOR DFLEC (IN.)	2"	2"	
COOLING COIL	SENSIBLE (MBH)	178.4	158.9	274.2
	TOTAL (MBH)	188.7	167.1	277.6
	COIL SIZE (FT.2)	13.33	11.25	13.65
	AIR PD (IN. WC)	0.36	0.37	0.29
	EADB/EAWB (OF)	84/64	84/64	105/71
	GPM	37.7	33.13	55.30
	PD	6.92	6.25	2.84
	EWT	44	44	44
	BRANCH SIZE (IN.)	2"	2"	2-1/2"
HEATING COIL	CAPACITY (MBH)	181.3	165.3	372
	COIL SIZE (FT.2)	12.5	11.3	13.65
	AIR PD (IN. WC)	0.15	0.14	0.17
	EADB (OF)	60	60	32
	GPM	18.3	16.7	37.3
	PD	6.57	6.3	2.0
	EWT	140	140	140
	BRANCH SIZE (IN.)	1-1/2"	1-1/4"	2"
FILTERS	FACE AREA	15.0	15.0	18.1
	EFFICIENCY	MERV 13	MERV 13	MERV 13
	TYPE	2" PLEATED	2" PLEATED	2" PLEATED
MANUFACTURER		TRANE/WILSENERGY	TRANE/WILSENERGY	TRANE
TYPE		OUTDOOR	OUTDOOR	OUTDOOR
MODEL NUMBER		CUSTOM	CUSTOM	CSAA014
LOCATION		ROOF	ROOF	ROOF
SERVICE		NORTH CLASSROOMS	SOUTH CLASSROOMS	CHEM LAB 232
OPER. WT (LBS)		7,900	7,650	3,500
ACCESSORIES		1,2,3,4	1,2,3,4	1,3,4
ANCHORAGE DETAIL		12/M802.2	12/M802.2	14/M802.2

1. SUPPLY FAN VFD
2. RET/EXH FAN VFD
3. SEISMICALLY CALCULATED VIBRATION ISOLATION CURB WITH 14" BASE CURB

4. FURNISH AND INSTALL DUCT SMOKE DETECTOR IN SUPPLY DUCT (SYSTEM SENSOR 'D4120' SERIES) WITH SAMPLING TUBE OF LENGTH AS REQUIRED TO MATCH DUCT DIMENSION. PROVIDE CONDUIT AND CONDUCTORS AS REQUIRED FOR UNIT SHUTDOWN UPON DETECTION OF SMOKE.

ENERGY RECOVERY VENTILATOR UNIT

DESIGNATION		ERV-1	ERV-2	ERV-3	ERV-4	ERV-5
MCA/MOCP (AMPS)		21.5/30	21.5/30	13.6/15	21.5/30	12/15
VOLTS / PHASE		480/3	480/3	480/3	480/3	480/3
OUTSIDE AIR	FLOW RATE (CFM)	6500	5500	3150	3850	1145
	EXT SP (IN. WC)	0.00	0.00	1.00	1.50	1.50
	HP / BRAKE HP	5/4.07	5/3.54	3/2.45	5/3.08	1.5 / 0.8
	R.P.M.	874	965	1,614	1,290	1,750
	SUMMER					
	EADB/EAWB (OF)	105/71	105/71	105/71	105/71	105/71
	LADB/LAWB (OF)	84.1/64.3	85.5/64.7	84.3/63.7	84.8/63.9	84.8/63.9
	WINTER					
	EADB/EAWB (OF)	32/31	32/31	32/31	32/31	32/31
	LADB/LAWB (OF)	59.8/49.5	58.1/48.5	59.7/47.8	58.9/47.7	59/47.4
EXHAUST AIR	FLOW RATE (CFM)	6300	5200	2600	3500	1400
	EXT SP (IN. WC)	0.00	0.00	0.50	1.00	1.25
	HP / BRAKE HP	5/4.77	5/4.04	3/2.28	5/3.2	1.5/1.28
	R.P.M.	1,005	1,095	1,632	1,406	1,986
	SUMMER					
	EADB/EAWB (OF)	75/61	75/61	75/60	75/60	75/60
	LADB/LAWB (OF)	96.5/68.4	95.9/68.2	97.3/68.4	97.3/68.4	99.4/69.1
	WINTER					
	EADB/EAWB (OF)	72/56	72/56	72/54	72/54	72/54
	LADB/LAWB (OF)	43.3/39.2	44.2/39.8	42.3/37.8	42.2/37.7	39.4/36
RECOVERY CAP. (TONS)		13.50	11.50	6.60	8.06	2.40
RECOVERY CAP. (MBH)		162.5	137.5	78.7	96.7	28.6
MANUFACTURER		SEMCO	SEMCO	SEMCO	SEMCO	SEMCO
TYPE		HEAT WHEEL	HEAT WHEEL	HEAT WHEEL	HEAT WHEEL	HEAT WHEEL
MODEL NUMBER		FVTS-7500	FVTS-5000	FV-4000V	FV-4000V	FV-2000V
SERVICE		DOAS-1	DOAS-2	BIO 230 & PREP 231	LECTURE 101	LOBBY & CORE
OPER. WT (LBS)		2,400	1,650	1,650	1,650	850
ACCESSORIES		1,2	1,2	1,2,3	1,2,3	1,2,3
ANCHORAGE DETAIL		2/M803.2	4/M803.2	4/M803.2	4/M803.2	12/M803.2

1 - SUPPLY FAN VFD, EXHAUST FAN VFD, DUCT FLANGE, HINGED ACCESS DOORS, OUTDOOR AND RETURN AIR FILTERS.

2- SEISMICALLY CALCULATED VIBRATION ISOLATION CURB WITH 14" BASE CURB.

3- FURNISH AND INSTALL DUCT SMOKE DETECTOR IN SUPPLY DUCT (SYSTEM SENSOR 'D4120' SERIES) WITH SAMPLING TUBE OF LENGTH AS REQUIRED TO MATCH DUCT DIMENSION. PROVIDE CONDUIT AND CONDUCTORS AS REQUIRED FOR UNIT SHUTDOWN UPON DETECTION OF SMOKE.

ROOF VENT SCHEDULE

DESIGNATION	RV-1	RV-2
CFM	7000	7000
SP (IN. WC)	0.08	0.02
THROAT VELOCITY (FPM)	778.00	280.00
SIZE	24"x54"	60"x60"
MOUNTING	CURB	CURB
MANUFACTURER	GREENHECK	GREENHECK
MODEL NUMBER	FGI-2454	FGR-6060
SERVICE	OSA INTAKE	EXHAUST/RELIEF
OPER. WT. (LBS)	235	425
ACCESSORIES	1	1, 2

1. PITCHED 16" CURB WITH 1" INSULATION, 1" HOOD INSULATION, GALV MESH BIRD SCREEN, ALUM MESH INSECT SCREEN.

2. GREENHECK BD-100 COUNTER BALANCED BACKDRAFT DAMPER. INTERIOR OF HOOD AND THROAT PAINTED FLAT BLACK.

INDOOR UNIT SCHEDULE

DESIGNATION		IDU-1	IDU-2A/B	IDU-3	IDU-4	IDU-5	IDU-6
BLOWER	SUPPLY AIR (CFM)	810	810	375	810	810	375
	EXT. S P (IN. WC)	-	-	-	-	-	-
	VOLTS/PHASE	208/1	208/1	208/1	208/1	208/1	208/1
	MCA / MOCP	SEE ODU	SEE ODU	SEE ODU	SEE ODU	SEE ODU	SEE ODU
	F.L.A.	0.265	0.265	0.19	0.265	0.265	0.19
COOLING	SENSIBLE (MBH)	22.0	22.0	10.8	22.0	22.0	10.8
	TOTAL (MBH)	36	36	18	36	36	18
	EADB/EAWB (oF)	80/67	80/67	80/67	80/67	80/67	80/67
HEATING	CAP. (MBH) @47oF	40.00	40.00	22.00	40.00	40.00	22.00
FILTERS	TYPE	FACTORY CLEANABLE	FACTORY CLEANABLE	FACTORY CLEANABLE	FACTORY CLEANABLE	FACTORY CLEANABLE	FACTORY CLEANABLE
MANUFACTURER		MITSUBISHI	MITSUBISHI	MITSUBISHI	MITSUBISHI	MITSUBISHI	MITSUBISHI
TYPE		WALL	WALL	WALL	WALL	WALL	WALL
MODEL NUMBER		PKA-AK36NL	PKA-AK36NL	PKA-AL18NL	PKA-AK36NL	PKA-AK36NL	PKA-AL18NL
LOCATION		EMR 124	DATA 119	ELEC 131	EMR 106	DATA 219B	ELEC 219A
OPER. WT (LBS)		46	46	28	46	46	28
ACCESSORIES		1,2,3,4	1,2,3,4	1,2,3,4	1,2,3,4	1,2,3,4	1,2,3,4
ANCHORAGE DETAIL		9/M800.2	9/M800.2	9/M800.2	9/M800.2	9/M800.2	9/M800.2

1. 3RD PARTY THERMOSTAT INTERFACE KIT
2. REFRIGERANT LINE SET COVERS FOR EXPOSED PIPING IN ROOM (RECTORSEAL FORTRESS)
3. INDOOR UNIT IS POWERED BY THE OUTDOOR UNIT.
4. CONDENSATE LIFT PUMP, LITTLE GIANT EC-1U-DV, POWERED THROUGH IDU.

OUTDOOR UNIT SCHEDULE

DESIGNATION	ODU-1	ODU-2A/B	ODU-3	ODU-4	ODU-5	ODU-6
	-	-	-	-	-	-
VOLTS/PHASE	208/1	208/1	208/1	208/1	208/1	208/1
MCA/MOCP	34/56	34/56	16/27	34/56	34/56	16/27
EER2/SEER2 (AT ARI)	12 / 20.3	12 / 20.3	11 / 19.5	12 / 20.3	12 / 20.3	11 / 19.5
COOLING CAP (MBH)	33.4	33.4	18	33.4	33.4	18
AMBIENT (oF)	95	95	95	95	95	95
COP	4.1	4.1	3.1	4.1	4.1	3.1
HEATING CAP (MBH)	40	40	22	40	40	22
AMBIENT (oF)	47	47	47	47	47	47
MANUFACTURER	MITSUBISHI	MITSUBISHI	MITSUBISHI	MITSUBISHI	MITSUBISHI	MITSUBISHI
TYPE	HEAT PUMP	HEAT PUMP	HEAT PUMP	HEAT PUMP	HEAT PUMP	HEAT PUMP
MODEL NUMBER	PUZ-AK36NL	PUZ-AK36NL	PUZ-AK18NL	PUZ-AK36NL	PUZ-AK36NL	PUZ-AK18NL
LOCATION	ROOF	ROOF	ROOF	ROOF	ROOF	ROOF
OPER. WT (LBS)	224	224	100	224	224	100
NOTES	1	1	1	1	1	1
ANCHORAGE DETAIL	13/M800.2	13/M800.2	13/M800.2	13/M800.2	13/M800.2	13/M800.2

1. OUTDOOR UNIT POWERS INDOOR UNIT.

EXHAUST FAN SCHEDULE

DESIGNATION	EF-1	EF-2	EF-3	EF-4	EF-5
CFM (MAX/MIN)	4630 / 1200	5160 / 1300	740 / 300	350	600
EXT. S P (IN. WC)	2.00	2.00	2.00	0.50	0.50
BHP/ HP	3.86 / 5	4.1 / 5	0.97 / 1.5	0.08 / 1/4	0.12 / 1/6
VOLTS/ PHASE	460/3	460/3	460/3	120/1	120/1
RPM	1792	1830	3065	1498	1542
INLET / OUTLET dBA	76/74	76/76	74/64	53 / -	56 / -
DRIVE	DIRECT	DIRECT	DIRECT	DIRECT	DIRECT
MOUNTING	ROOF CURB	ROOF CURB	ROOF CURB	ROOF CURB	ROOF CURB
MANUFACTURER	GREENHECK	GREENHECK	GREENHECK	GREENHECK	GREENHECK
TYPE	CENTRIFUGAL	CENTRIFUGAL	CENTRIFUGAL	CENTRIFUGAL	CENTRIFUGAL
MODEL NUMBER	VK-H-20-15	VK-H-20-17	VK-H-12-5	CUE-100HP-VG	CUE-095-VG
CONTROL	EMS	EMS	EMS	WALL SWITCH	EMS
SERVICE	CHEM 232	CHEM 232	PREP 231	PREP 231	PREP 231
LOCATION	ROOF	ROOF	ROOF	ROOF	ROOF
OPER. WT. (LBS)	950	950	550	120	100
ACCESSORIES	1	1	1	2	3
ANCHORAGE DETAIL	12&17/M800.2	12&17/M800.2	12&17/M800.2	4/M802.2	4/M802.2

1. BYPASS PLENUM, SIDE INLET, ISOLATION DAMPER, VFD, SURE-AIRE FLOW STATION, SPRING ISOLATED CURB.
2. HIGH TEMPERATURE RATED, BACKDRAFT DAMPER, STAINLESS STEEL BIRD SCREEN, ECM MOTOR W/DIAL ON MOTOR, 24" PITCHED CURB.
3. HIGH TEMPERATURE RATED, BACKDRAFT DAMPER, STAINLESS STEEL BIRD SCREEN, ECM MOTOR W/ 0-10 VDC, 24" PITCHED CURB.

IDENTIFICATION STAMP
DIV. OF THE STATE ARCHITECT
APP: 02-122821 INC: 2
REVIEWED FOR
SS ☑ FLS ☑ ACS ☑
DATE: 11/20/2025

Teter, Inc. expressly reserves its common law copyright and other property rights in these plans. This document, the ideas and designs incorporated herein, as an instrument of professional service, is not to be used in whole or in part, for any other project without prior written authorization.

MARK	DATE	DESCRIPTION
A	11/13/2025	DSA BACKCHECK

TETER, INC.
ARCHITECTS ENGINEERS CONNECTED
FRESNO HEADQUARTERS
VISALIA | BAKERSFIELD | MODESTO | SAN LUIS OBISPO

VISALIA CAMPUS UNIVERSITY CENTER
COLLEGE OF THE SEQUOIAS
915 S. MOONEY BLVD
VISALIA, CALIFORNIA

DRAWING TITLE
MECHANICAL SCHEDULES

PROJECT NO.
22-12498

DRAWING
M002.2

PLOT DATE: 11/10/2025 4:32:20 PM

\\tet-file-1\Users\zachary.davis_TETR\Documents\12498-M-UC_zachary.davis@WYRV.rvt

\\tet-file1\Users\zachary.davis_TETR\Documents\12498-M-UC_zachary.davis8WYRV.rvt

MECHANICAL SCHEDULES

BUFFER TANK SCHEDULE

DESIGNATION	BT-1
TANK VOL (GAL)	500
DIAMETER (IN)	42
HEIGHT (IN)	90
CONNECTION SIZE (IN)	4
MANUFACTURER	WESSELS
MODEL NUMBER	WMT-500
LOCATION	ROOF
SERVICE	HOT WATER
FULL. WT (LBS)	5,150
ACCESSORIES	1
ANCHORAGE DETAIL	30/M800.2

1. AIR VENT AND BLOW DOWN TRIM PACKAGE.

EXPANSION TANK SCHEDULE

DESIGNATION	ET-1	ET-2
TANK VOL (GAL)	13	79
ACCEPTANCE (GAL)	13	79
DIAMETER (IN)	14	24
HEIGHT (IN)	24	55
MANUFACTURER	WESSELS	WESSELS
MODEL NUMBER	NLA 50	NLA 300
LOCATION	ROOF	ROOF
SERVICE	CHILLED WATER	HOT WATER
FULL. WT (LBS)	160	890
ACCESSORIES	1	1
ANCHORAGE DETAIL	24/M800.2	24/M800.2

1. CALIFORNIA CODE SIGHT GLASS AND MOUNTING CLIPS.

AIR/DIRT SEPARATOR SCHEDULE

DESIGNATION	ADS-1	ADS-2
FLOW (GPM)	400	200
SIZE (IN.)	6	4
MANUFACTURER	SPIROTHERM	SPIROTHERM
MODEL NUMBER	VDN-600-FA	VDN-400-FA
SERVICE	CHILLED WATER	HOT WATER
LOCATION	ROOF	ROOF
OPER. WT (LBS)	550	300
ACCESSORIES	1	1
ANCHORAGE DETAIL	25/M800.2	25/M800.2

1. REMOVABLE LOWER HEAD FOR CLEANING

AIR HANDLER SCHEDULE

DESIGNATION		AH-1
ELEC	VOLTS/PHASE	460/3
	FLA/MCA/MOCP	11.22 / 13.97 / 20
SUPPLY FAN	AIR FLOW (CFM)	7,000
	EXT. SP (IN. WC)	1.50
	MIN. O.S.A. (CFM)	1,670
	HP/BRAKE HP	7.5/6.82
	FAN TYPE	PLENUM
	DRIVE	DIRECT
	ISOLATOR DFLEC (IN.)	2"
COOLING COIL	SENSIBLE (MBH)	176.9
	TOTAL (MBH)	210.5
	COIL SIZE (FT.2)	13.44
	AIR PD (IN. WC)	0.57
	EADB/EAWB (OF)	78/64
	GPM	42
	PD	3.98
	EWT	44
	BRANCH SIZE (IN.)	2"
HEATING COIL	TOTAL (MBH)	174.6
	COIL SIZE (FT.2)	13.65
	AIR PD (IN. WC)	0.16
	EADB (OF)	68
	GPM	17.5
	PD	0.47
	EWT	140
	BRANCH SIZE (IN.)	1-1/2"
FILTERS	FACE AREA	14.44
	EFFICIENCY (MERV)	13
	TYPE	2" PLEATED
MANUFACTURER		TRANE
TYPE		INDOOR
MODEL NUMBER		CSAA014
LOCATION		MECH 100B
SERVICE		ENTRY LOBBY
OPER. WT (LBS)		1,750
ANCHORAGE DETAIL		25/M801.2
ACCESSORIES		1,2,3

1. SUPPLY FAN VFD

2. FURNISH AND INSTALL DUCT SMOKE DETECTOR IN SUPPLY DUCT (SYSTEM SENSOR 'D4120' SERIES) WITH SAMPLING TUBE OF LENGTH AS REQUIRED TO MATCH DUCT DIMENSION. PROVIDE CONDUIT AND CONDUCTORS AS REQUIRED FOR UNIT SHUTDOWN UPON DETECTION OF SMOKE.

3. CONDENSATE LIFT PUMP, LITTLE GIANT VCMA-20-PRO, 115V, MIN 16' LIFT, 2 GPH.

GRILLE SCHEDULE

MARK	DUTY	DESCRIPTION
A	LAY-IN SUPPLY	TITUS MODEL PMC (TYPE 3) PERFORATED FACE DIFFUSER FIELD POSITIONABLE DIRECTIONAL LOUVER CORE MOUNTED IN SQUARE NECK FOR LAY-IN CEILING, 24"x24" MODULE, STANDARD FINISH - #26 WHITE.
B	LAY-IN RETURN / EXHAUST	TITUS MODEL PAR (TYPE 3) PERFORATED FACE RETURN GRILLE FOR LAY-IN CEILING, 24"x24" MODULE, STANDARD FINISH - #26 WHITE.
C	SURFACE MOUNT RETURN/EXHAUST	TITUS MODEL 25RL (TYPE 1), STEEL FIXED LOUVER, 1/2" BLADE SPACING, 30° FIXED DEFLECTION, O.B.D., FLAT BLACK INTERIOR, AND #26 WHITE FINISH.
D	LINEAR DIFFUSER SUPPLY	LINER DIFFUSER FL-TZ-DF-HT, 1" SLOT WIDTH WITH 8" INLET FACTORY LINED PLENUM. PROVIDE HIGH THROW PATTERN CONTROLLER.
E	LINEAR DIFFUSER SUPPLY/RETURN	LINER DIFFUSER FL-TZ-DF-JT. 1" SLOT WIDTH WITH 10" INLET FACTORY LINED PLENUM. PROVIDE JET THROW PATTERN CONTROLLER.
F	LINEAR DIFFUSER SUPPLY	LINER DIFFUSER FT-15-HT. 1.5" SINGLE SLOT WIDTH FLOW-TEE WITH 8" INLET FACTORY LINED PLENUM. PROVIDE HIGH THROW PATTERN CONTROLLER.
G	LINEAR DIFFUSER SUPPLY	LINER DIFFUSER FT-15-JT. 1.5" SINGLE SLOT WIDTH FLOW-TEE WITH 10" INLET FACTORY LINED PLENUM. PROVIDE JET THROW PATTERN CONTROLLER.
H	LINEAR DIFFUSER SUPPLY (SIDEWALL)	LINER DIFFUSER FL-15-JT, BORDER TYPE 22. 1.5" SINGLE SLOT WIDTH WITH 10" INLET FACTORY LINED PLENUM. PROVIDE JET THROW PATTERN CONTROLLER.
J	LINEAR DIFFUSER SUPPLY	LINER DIFFUSER FL-10-JT, BORDER TYPE 11. 1" SINGLE SLOT WIDTH WITH 10" INLET FACTORY LINED PLENUM. PROVIDE JET THROW PATTERN CONTROLLER.
K	SURFACE MOUNT SUPPLY	TITUS TDC (TYPE 1) SURFACE MOUNT, STEEL LOUVERED FACE DIFFUSER, SQUARE OR RECTANGULAR NECK, NO. 26 STANDARD WHITE FINISH.
L	SURFACE MOUNT SIDEWALL SUPPLY	TITUS 272RL (TYPE 1) STEEL DOUBLE DEFLECTION LOUVER, 3/4" BLADE SPACING, INDIVIDUALLY ADJUSTABLE AIRFOIL BLADES. FRONT BLADES PARALLEL TO THE LONG DIMENSION.
M	LINEAR DIFFUSER SUPPLY	LINER DIFFUSER FL-TZ-DF-HT, 1" SLOT WIDTH WITH 10" INLET FIELD FABRICATED 72" LINED PLENUM. PROVIDE HIGH THROW PATTERN CONTROLLER.
N	LINEAR DIFFUSER SUPPLY/RETURN	LINER DIFFUSER FL-TZ-DF-JT. 1" SLOT WIDTH WITH 10" INLET FIELD FABRICATED 72" LINED PLENUM. PROVIDE JET THROW PATTERN CONTROLLER.

LABORATORY VENTURI VALVE SCHEDULE

DESIGNATION	AVC-1 THRU AVC-7	AVC-8	AVC-9	AVT-1, AVT-2	AVT-3, AVT-4
CFM (MAX/MIN)	1290/260	910/230	740/185	3235/800	800/160
MAX PD (IN. WC)	0.10	0.13	0.15	0.13	0.18
MIN PD (IN. WC)	0.01	0.01	0.01	0.01	0.01
MANUFACTURER	ACCUTROL	ACCUTROL	ACCUTROL	ACCUTROL	ACCUTROL
MODEL	AVC6214	AVC6212	AVC6210	AVT6236	AVT6210
SIZE	14	12	10	12x36	10
SERVICE	HOOD EXHAUST	HOOD EXHAUST	HOOD EXHAUST	SUPPLY	EXHAUST
ZONE	HOOD 1 THRU 7	HOOD 8	HOOD 9	SUPPLY	EXHAUST
LOCATION	CHEM 232	CHEM 232	PREP 231	CHEM 232	CHEM 232
ACCESSORIES	1,2	1,2	1,2	1	1

1. FLANGE CONNECTIONS, CASING INSULATION
2. ACCUTROL VSS-50 SASH SENSOR AND APEX AIR VELOCITY ALARM

DUCT SILENCER SCHEDULE

DESIGNATION	AIRFLOW (CFM)	VELOCITY (FPM)	PD (IN. WC)	INSTALLED PD (IN. WC)	CONFIGURATION	CENTERLINE LENGTH	WIDTH	HEIGHT	WEIGHT	DYNAMIC INSERTION LOSS (dB) 63 HZ	125 HZ	250 HZ	500 HZ	1000 HZ	2000 HZ	4000 HZ	8000 HZ	MANUFACTURER	MODEL	AIR HANDLER	COMMENTS
DS-1	6500				ELBOW	144	60	24	600									BRD	HD-A6144MRE	DOAS-1	(2) NESTED
DS-2	6300				ELBOW	144	30	30	350									BRD	HD-A6144MRE	DOAS-1	
DS-3	5550				ELBOW	144	60	24	600									BRD	HD-A6144MRE	DOAS-2	(2) NESTED
DS-4	5200				ELBOW	144	30	30	350									BRD	HD-A6144MRE	DOAS-2	
DS-5	6470	647	0.03	0.07	ELBOW	144	60	24	600	13	17	26	55	54	48	40	32	BRD	HD-A6144MRE	DOAS-3	(2) NESTED
DS-6	3200				ELBOW	120	30	18	300									BRD		ERV-3	
DS-7	3200				ELBOW	120	30	18	300									BRD		ERV-3	
DS-8	3870				STRAIGHT	96	36	16	300									BRD		ERV-4	
DS-9	3870				STRAIGHT	96	36	16	300									BRD		ERV-4	
DS-10	2700				STRAIGHT	96	36	16	300									BRD		ERV-5	
DS-11	2700				STRAIGHT	96	36	16	300									BRD		ERV-5	
DS-12	3000	924	0.09	0.12	STRAIGHT	72	34(46)	13.75	182	7	15	27	39	39	29	19	14	BRD	HD-F672XHR	FC-15	EXTENDED CASING
DS-13	3000	924	0.09	0.12	STRAIGHT	72	34(46)	13.75	182	7	15	27	39	39	29	19	14	BRD	HD-F672XHR	FC-16	EXTENDED CASING

IDENTIFICATION STAMP
DIV. OF THE STATE ARCHITECT
APP: 02-122821 INC: 2
REVIEWED FOR
SS ☑ FLS ☑ ACS ☑
DATE: 11/20/2025

Teter, Inc. expressly reserves its common law copyright and other property rights in these plans. This document, the ideas and designs incorporated herein, as an instrument of professional service, is not to be used in whole or in part, for any other project without prior written authorization.

MARK	DATE	DESCRIPTION
A	11/13/2025	DSA BACKCHECK

TETER, INC.
FRESNO HEADQUARTERS
VISALIA | BAKERSFIELD | MODESTO | SAN LUIS OBISPO
ARCHITECTS ENGINEERS CONNECTED

VISALIA CAMPUS UNIVERSITY CENTER
COLLEGE OF THE SEQUOIAS
915 S. MOONEY BLVD
VISALIA, CALIFORNIA

DRAWING TITLE
MECHANICAL SCHEDULES

PROJECT NO.
22-12498

DRAWING
M003.2

PLOT DATE: 11/10/2025 4:32:23 PM

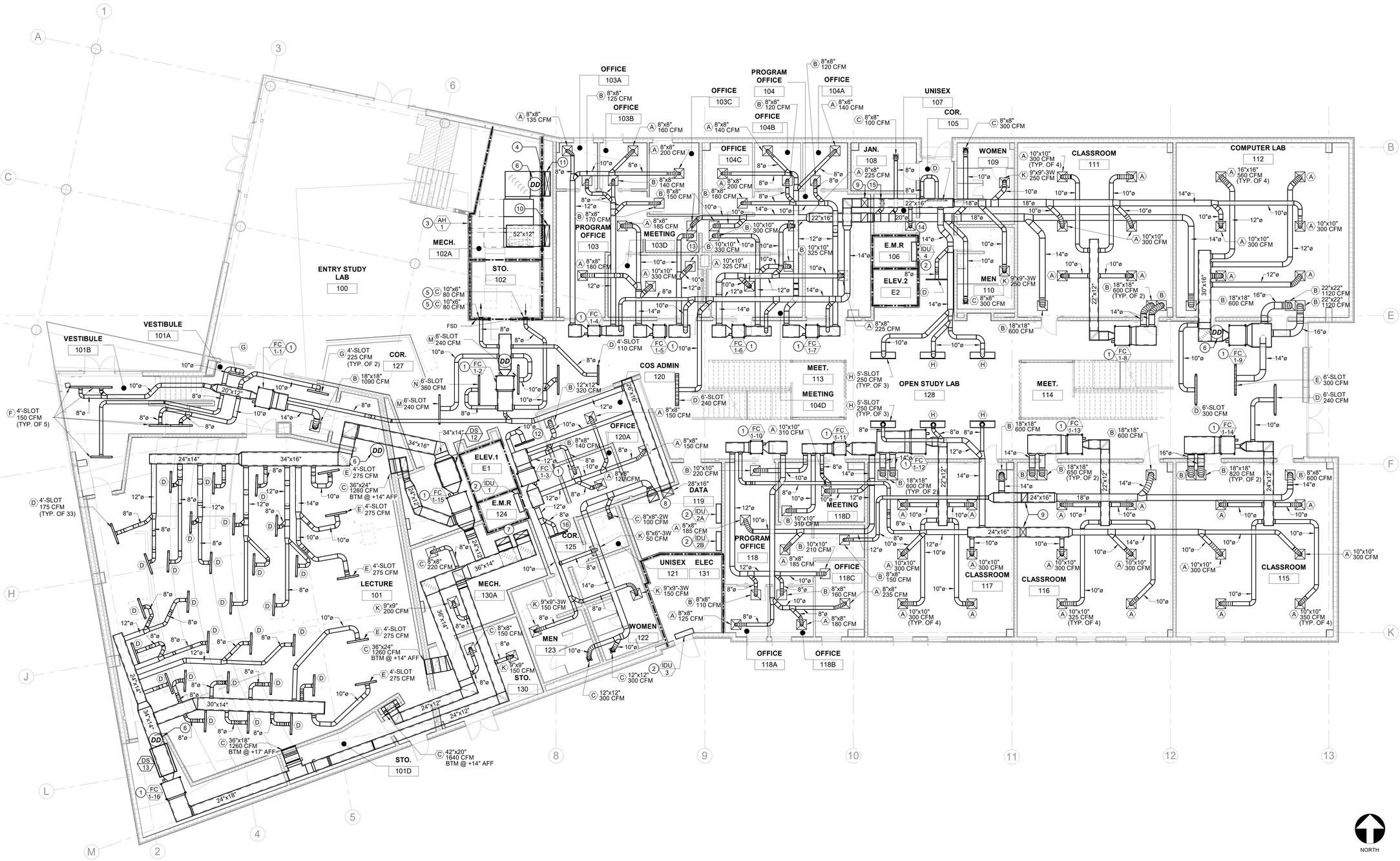

MECHANICAL FLOOR PLAN - FIRST FLOOR

1/8" = 1'-0" | 1

GENERAL NOTES

A. REFER TO DETAIL 3/M800.2 FOR TYPICAL BRANCH DUCT CONNECTIONS.
B. REFER TO DETAIL 1/M800.2 & 8/M801.2 FOR TYPICAL CEILING GRILLE INSTALLATION,
C. REFER TO DETAIL 5/M800.2 FOR TYPICAL DUCT SUPPORTS.
D. REFER TO DETAIL 2/M800.2 FOR TYPICAL LINEAR DIFFUSER INSTALLATION.
E. DUCT SIZES SHOWN ARE INSIDE CLEAR DIMENSIONS. WHERE INTERNAL LINING IS SHOWN OR SPECIFIED, INCREASE FABRICATED DUCT DIMENSIONS TO ACCOMODATE.
F. ——— WALL LINETYPE DESIGNATES FIRE RATED CONSTRUCTION. REFER TO ARCHITECTURAL DRAWINGS.

KEYNOTES

1 CONCEALED DUCTED FAN COIL ABOVE CEILING. SEE DETAIL 27/M800.2 FOR SUPPORT.
2 WALL MOUNT DUCTLESS FAN COIL ABOVE DOOR BTM AT 8'-6". SEE 9/M800.2 FOR DETAIL.
3 FLOOR MOUNTED AIR HANDLER IN MECHANICAL ROOM BELOW STAIR. SEE 25/M801.2 FOR DETAIL.
4 THRU WALL COMBINATION FIRE/SMOKE DAMPER. SEE 4/M800.2 FOR DETAIL.
5 SIDEWALL GRILLE W/ COMBINATION FIRE/SMOKE DAMPER. SEE 5/M802.2 FOR DETAIL.
6 DUCT SMOKE DETECTOR MOUNTED IN SUPPLY DUCT. SEE 7/M800.2 FOR DETAIL.
7 36"x14" SUPPLY AND 36"x14" EXHAUST DUCT RISERS IN SHAFT UP TO 2ND FLOOR.
8 28"x16" SUPPLY AND 28"x16" EXHAUST DUCT RISERS IN SHAFT UP TO 2ND FLOOR.
9 26"x16" SUPPLY AND 24"x16" RETURN DUCT RISERS IN SHAFT UP TO 2ND FLOOR.
10 54"x12" RA DUCT WITH 1-1/2" AC LINING UP IN SHAFT WALL.
11 54"x12" SA DUCT W/ 1-1/2" AC LINING UP IN WALL SHAFT. TRANSITION TO 60"x12" AND OFFSET SOUTH.
12 (E) 4'-SLOT 210 CFM ED DUCTED FAN COIL ABOVE CEILING. SEE DETAIL 27/M800.2 FOR SUPPORT.
13 (E) 10"x10" 220 CFM ED DUCTED FAN COIL ABOVE CEILING. SEE DETAIL 27/M800.2 FOR SUPPORT.
14 (K) 6"x6"-2W 75 CFM
15 (C) 8"x8" 100 CFM
16 (D) 4'-SLOT 100 CFM

IDENTIFICATION STAMP
DIV. OF THE STATE ARCHITECT
APP: 02-122821 INC: 2
REVIEWED FOR
SS ☑ FLS ☑ ACS ☑
DATE: 11/20/2025

Teter, Inc. expressly reserves its common law copyright and other property rights in these plans. This document, the ideas and designs incorporated herein, as an instrument of professional service, is not to be used in whole or in part, for any other project without prior written authorization.

MARK	DATE	DESCRIPTION
A.	11/13/2025	DSA BACKCHECK

TETER, INC.
FRESNO HEADQUARTERS
VISALIA | BAKERSFIELD | MODESTO | SAN LUIS OBISPO
ARCHITECTS ENGINEERS CONNECTED

VISALIA CAMPUS UNIVERSITY CENTER
COLLEGE OF THE SEQUOIAS
915 S. MOONEY BLVD
VISALIA, CALIFORNIA

DRAWING TITLE
MECHANICAL FLOOR PLAN - FIRST FLOOR

PROJECT NO.
22-12498

DRAWING
M210.2

PLOT DATE: 11/10/2025 4:32:43 PM

\\tet-file1\Users\zachary.davis_TETR\Documents\12498-M-UC_zachary.davis8WYRV.rvt

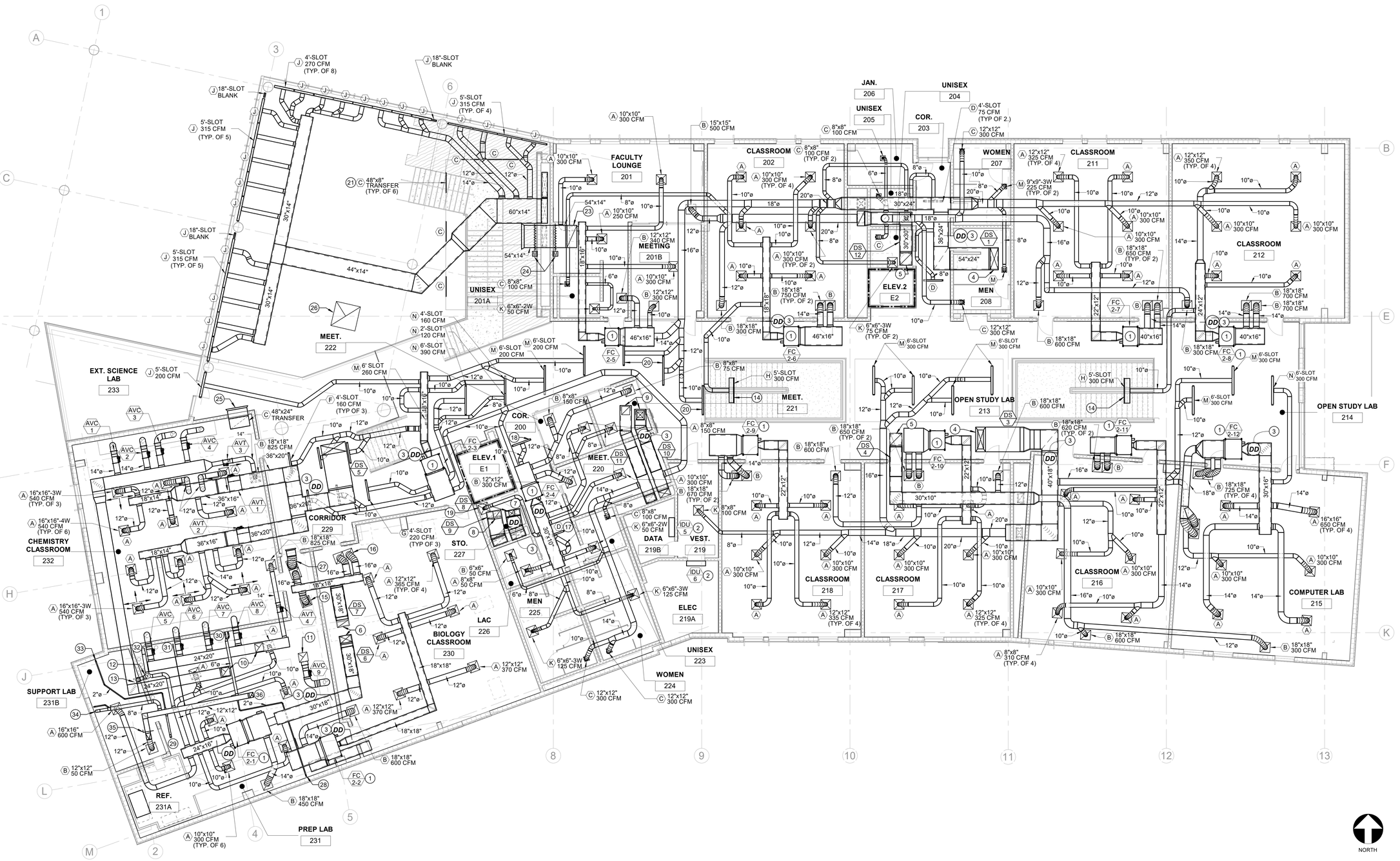

MECHANICAL FLOOR PLAN - SECOND FLOOR

1/8" = 1'-0" | 1

GENERAL NOTES

A. REFER TO DETAIL 3/M800.2 FOR TYPICAL BRANCH DUCT CONNECTIONS.
B. REFER TO DETAIL 1/M800.2 & 8/M801.2 FOR TYPICAL CEILING GRILLE INSTALLATION.
C. REFER TO DETAIL 5/M800.2 FOR TYPICAL DUCT SUPPORTS.
D. REFER TO DETAIL 2/M800.2 FOR TYPICAL LINEAR DIFFUSER INSTALLATION.
E. DUCT SIZES SHOWN ARE INSIDE CLEAR DIMENSIONS. WHERE INTERNAL LINING IS SHOWN OR SPECIFIED, INCREASE FABRICATED DUCT DIMENSIONS TO ACCOMODATE.
F. ▬·▬·▬ WALL LINETYPE DESIGNATES FIRE RATED CONSTRUCTION. REFER TO ARCHITECTURAL DRAWINGS.

KEYNOTES

1 CONCEALED DUCTED FAN COIL ABOVE CEILING. SEE DETAIL 27/M800.2 FOR SUPPORT.
2 WALL MOUNT DUCTLESS FAN COIL. BTM. @ 8'-6" AFF. SEE 9/M800.2 FOR DETAIL.
3 DUCT SMOKE DETECTOR MOUNTED IN SUPPLY DUCT. SEE 7/M800.2 FOR DETAIL.
4 60"x24" SA DUCT DOWN FROM DOAS-1,2,3 ON ROOF TO ELBOW SOUND TRAP.
5 30"x30" RA DUCT DOWN FROM DOAS-1,2 ON ROOF TO ELBOW SOUND TRAP.
6 30"x18" SA & RA DUCTS DOWN FROM ERV-3 ON ROOF TO ELBOW SOUND TRAPS.
7 14"x15" SA DUCT DOWN FROM ERV-4 ON ROOF. TRANS TO 36"x16" TO SOUND TRAP IN VERTICAL DUCT. PROVIDE TURNING VANES AT BOTTOM ELBOW.
8 20"x20" EA DUCT DOWN FROM ERV-4 ON ROOF. TRANS TO 36"x16" TO SOUND TRAP IN VERTICAL DUCT. PROVIDE TURNING VANES AT BOTTOM ELBOW.
9 14"x15" SA & 20"x20 RA DUCTS DOWN FROM ERV-5 ON ROOF. TRANS TO 36"x16" IN VERTICAL. PROVIDE TURNING VANES AT BOTTOM ELBOW. WRAP ALL DUCT FROM DECK TO SOUND TRAP W/ LOADED VINYL DUCT LAGGING (BRD HUSHFLEX).
10 20"x20" EA DUCT UP THRU ROOF. WRAP ALL EA DUCTWORK FROM FUME HOOD TO ROOF PENETRATION W/ LOADED VINYL DUCT LAGGING (BRD HUSHFLEX).
11 12"x12" EA DUCT UP THRU ROOF. WRAP ALL EA DUCTWORK FROM FUME HOOD TO ROOF PENETRATION W// LOADED VINYL DUCT LAGGING (BRD HUSHFLEX).
12 12"x12" EA DUCT UP TO EXHAUST FAN ON ROOF.
13 6" STAINLESS STEEL EA DUCT DOWN TO 11"x11" HOOD. SET HOOD ELEVATION AT 4" ABOVE LAB EQUIPMENT E17 EXHAUST DISCHARGE. SEE DETAIL 15/M800.2
14 LINEAR SLOT DIFFUSERS MOUNTED IN SIDEWALL OF SOFFIT.
15 (B) 18"x18" 500 CFM (TYP OF 2)
16 (B) 18"x18" 800 CFM (TYP OF 2)
17 (K) 4'-SLOT 100 CFM
18 (E) 4'-SLOT 170 CFM
19 (D) 6"x6"-2W 50 CFM
20 (M) 6'-SLOT 300 CFM
21 LINEAR BAR GRILLE IN SIDEWALL OF SOFFIT.
22 NOT USED.
23 54"x24" OSA DUCT DOWN FROM ROOF VENT. SEE M500.2 FOR CONT.
24 AH-1 MOTORIZED ECONOMIZER DAMPER.
25 48"x24" TRANSFER DUCT. TERMINATE ABOVE CEILING W/ 1/2" WIRE MESH.
26 60"x60" RELIEF ABOVE CEILING TO VENT ON ROOF.
27 22"x22" TRANSFER DUCT. TERMINATE ABOVE CEILING W/ 1/2" WIRE MESH.
28 2" DUCT DOWN TO E16 FOR DETECTOR GAS VENT.
29 4" DUCT DOWN TO CABINET VENT, BALANCE TO 60 CFM.
30 (2) 2.5" DUCTS DOWN TO E14 VENTS. COLLECT ABOVE CEILING TO 6" DUCT, BALANCE TO 100 CFM.
31 (2) 1/2" TUBES DOWN TO E11 VENTS.
32 8" DUCT DOWN TO CABINET VENT, BALANCE TO 200 CFM.
33 2" DUCT DOWN TO E20 VENTS.
34 6" & 2" DUCTS DOWN TO E15 VENTS. COLLECT ABOVE CEILING TO 8" DUCT.
35 COUNTER BALANCED BAROMETRIC DAMPER.
36 10"x10" EXHAUST DUCT UP TO FAN ON ROOF.
A CONCEALED DUCTED FAN COIL ABOVE CEILING. SEE DETAIL 27/M800.2 FOR SUPPORT.
B CONCEALED DUCTED FAN COIL ABOVE CEILING. SEE DETAIL 27/M800.2 FOR SUPPORT.

IDENTIFICATION STAMP
DIV. OF THE STATE ARCHITECT
APP: 02-122821 INC: 2
REVIEWED FOR
SS ☑ FLS ☑ ACS ☑
DATE: 11/20/2025

Teter, Inc. expressly reserves its common law copyright and other property rights in these plans. This document, the ideas and designs incorporated herein, as an instrument of professional service, is not to be used in whole or in part, for any other project without prior written authorization.

MARK	DATE	DESCRIPTION
A	11/13/2025	DSA BACKCHECK

TETER, INC.
FRESNO HEADQUARTERS
VISALIA | BAKERSFIELD | MODESTO | SAN LUIS OBISPO
ARCHITECTS ENGINEERS CONNECTED

VISALIA CAMPUS UNIVERSITY CENTER
COLLEGE OF THE SEQUOIAS
915 S. MOONEY BLVD
VISALIA, CALIFORNIA

DRAWING TITLE
MECHANICAL FLOOR PLAN - SECOND FLOOR

PROJECT NO.
22-12498

DRAWING
M220.2

PLOT DATE: 11/10/2025 4:33:04 PM

\\tet-file1\Users\zachary.davis_TETR\Documents\12498-M-UC_zachary.davis8WYRV.rvt

\\tet-file1\Users\zachary.davis_TETER\Documents\12498-M-UC_zachary.davisBWYRV.rvt

IDENTIFICATION STAMP
DIV. OF THE STATE ARCHITECT
APP: 02-122821 INC: 2
REVIEWED FOR
SS ☑ FLS ☑ ACS ☑
DATE: 11/20/2025

Teter, Inc. expressly reserves its statutory law copyright and other property rights in these plans. This document, the ideas and designs incorporated herein, as an instrument of professional service, is not to be used in whole or part, for any other project without prior written authorization.

MARK	DATE	DESCRIPTION
A.	11/13/2025	DSA BACKCHECK

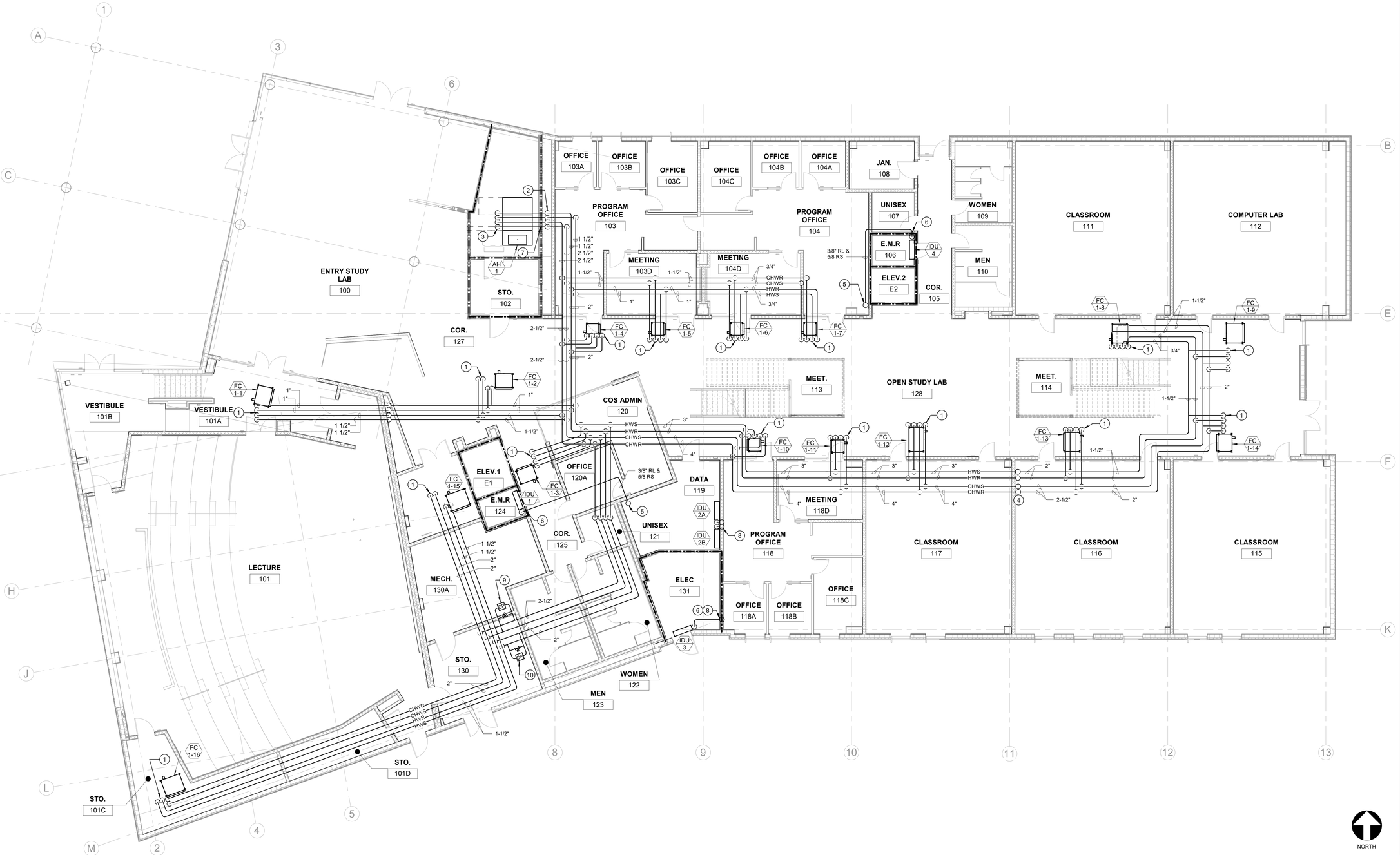

MECHANICAL FLOOR PLAN - PIPING FIRST FLOOR

1/8" = 1'-0" | 1

GENERAL NOTES

A. SEE DETAILS 19/M800.2 & 7/M801.2 FOR TYPICAL PIPE SUPPORTS.
B. REFRIGERANT PIPING LINE SETS SHOWN AS SINGLE LINE FOR DRAWING CLARITY.
C. PROVIDE AIR VENT AT ALL HIGH POINTS IN CHW & HW PIPING.
D. — · — · — WALL LINETYPE DESIGNATES FIRE RATED CONSTRUCTION. REFER TO ARCHITECTURAL DRAWINGS.

KEYNOTES

1 CHW & HW COIL PIPING CONNECTIONS AT FAN COIL PER DETAIL 18/M800.2.
2 CHWS/R AND HWS/R PIPING DOWN IN CHASE WALL TO AH-1.
3 PIPING CONNECTIONS AT AH-1 PER DETAIL 18/M800.2.
4 CHWS/R & HWS/R UP TO 2ND FLR.
5 REFRIGERANT PIPING UP IN CHASE TO 2ND. FLR.
6 PIPE PENETRATION THROUGH RATED WALL PER DETAIL 3/M801.2.
7 PIPE PENETRATION THROUGH RATED WALL PER DETAIL 24/M802.2.
8 REFRIGERANT PIPING UP IN WALL TO 2ND FLOOR.
9 2-1/2" BRANCH TO CHW BYPASS VALVE AND DP SENSOR. BYPASS SET TO MAINTAIN MINIMUM SYSTEM FLOW AT 66 GPM.
10 2" BRANCH TO HW BYPASS VALVE AND DP SENSOR. BYPASS SET TO MAINTAIN MINIMUM SYSTEM FLOW AT 35 GPM.

A CHW & HW COIL PIPING CONNECTIONS AT FAN COIL PER DETAIL 18/M800.2.
B CHW & HW COIL PIPING CONNECTIONS AT FAN COIL PER DETAIL 18/M800.2.

TETER, INC.
ARCHITECTS ENGINEERS CONNECTED
FRESNO HEADQUARTERS
VISALIA | BAKERSFIELD | MODESTO | SAN LUIS OBISPO

VISALIA CAMPUS UNIVERSITY CENTER
COLLEGE OF THE SEQUOIAS
915 S. MOONEY BLVD
VISALIA, CALIFORNIA

DRAWING TITLE
MECHANICAL FLOOR PLAN - FIRST FLOOR PIPING

PROJECT NO.
22-12498

DRAWING
M310.2

PLOT DATE: 11/10/2025 4:33:17 PM

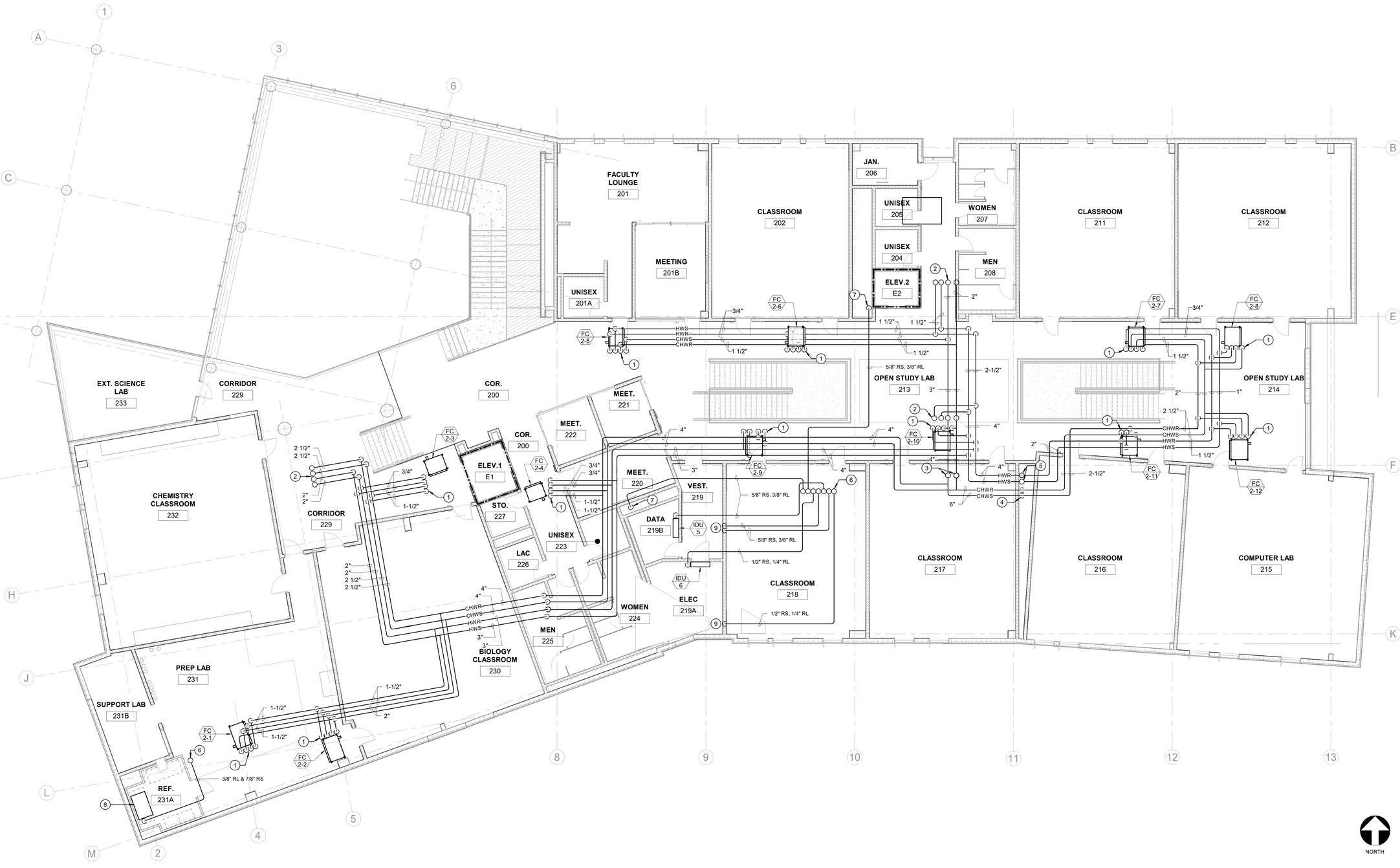

MECHANICAL FLOOR PLAN - PIPING SECOND FLOOR

1/8" = 1'-0" | 1

GENERAL NOTES

A. SEE DETAILS 19/M800.2 & 7/M801.2 FOR TYPICAL PIPE SUPPORTS.
B. REFRIGERANT PIPING LINE SETS SHOWN AS SINGLE LINE FOR DRAWING CLARITY.
C. PROVIDE AIR VENT AT ALL HIGH POINTS IN CHW & HW PIPING.
D. WALL LINETYPE DESIGNATES FIRE RATED CONSTRUCTION. REFER TO ARCHITECTURAL DRAWINGS.

KEYNOTES

1 CHW & HW COIL PIPING CONNECTIONS AT FAN COIL PER DETAIL 18/M800.2.
2 CHWS/R AND HWS/R PIPING UP TO DOAS ON ROOF. SEE M500.2 FOR CONT.
3 6"CHWS/R UP TO ROOF.
4 6"CHWS/R DOWN TO FIRST FLOOR.
5 4"HWS/R UP TO ROOF. 4"HWS/R DOWN TO FIRST FLOOR.
6 REFRIGERANT PIPING LINE SETS UP THROUGH ROOF. SEE M500.2 FOR CONT.
7 REFRIGERANT PIPING DOWN IN CHASE TO 1ST FLR.
8 COLD BOX EVAPORATOR SUSPENDED SUSPENEDED FROM CEILING. REFER TO COLD BOX MFR. FOR MOUNTING DETAILS.
9 REFRIGERANT PIPING DOWN IN WALL TO 1ST FLR.
A CHW & HW COIL PIPING CONNECTIONS AT FAN COIL PER DETAIL 18/M800.2.
B CHW & HW COIL PIPING CONNECTIONS AT FAN COIL PER DETAIL 18/M800.2.

IDENTIFICATION STAMP
DIV. OF THE STATE ARCHITECT
APP: 02-122821 INC: 2
REVIEWED FOR
SS ☑ FLS ☑ ACS ☑
DATE: 11/20/2025

Teter, Inc. expressly reserves its common law copyright and other property rights in these plans. This document, the ideas and designs incorporated herein, as an instrument of professional service, is not to be used in whole or part, for any other project without prior written authorization.

MARK	DATE	DESCRIPTION
A	11/13/2025	DSA BACKCHECK

TETER, INC.
FRESNO HEADQUARTERS
VISALIA | BAKERSFIELD | MODESTO | SAN LUIS OBISPO
ARCHITECTS ENGINEERS CONNECTED

VISALIA CAMPUS UNIVERSITY CENTER
COLLEGE OF THE SEQUOIAS
915 S. MOONEY BLVD
VISALIA, CALIFORNIA

DRAWING TITLE
MECHANICAL FLOOR PLAN - SECOND FLOOR PIPING

PROJECT NO.
22-12498

DRAWING
M320.2

PLOT DATE: 11/10/2025 4:33:26 PM

\\tet-file1\Users\zachary.davis_TETR\Documents\12498-M-UC_zachary.davis8WYRV.rvt

SCHEDULE OF POINTS

GENERAL INPUTS

POINT DESCRIPTION	HARDWARE: ANALOG INPUT (AI)	HARDWARE: ANALOG OUTPUT (AO)	HARDWARE: DIGITAL INPUT (DI)	HARDWARE: DIGITAL OUTPUT (DO)	SOFTWARE: SCHEDULE (S)	SOFTWARE: TEXT DISPLAY (T)	SOFTWARE: MODIFY VALUE (M)	SOFTWARE: ALARM (A)	SOFTWARE: LOG (L)	SOFTWARE: TREND (T)	GRAPHICS: ANIMATED (A)	GRAPHICS: DISPLAY (D)	COMMENTS
AMBIENT LIGHT			X			X			X		X		
OUTDOOR TEMPERATURE	X					X			X	X		X	
EXTERIOR LIGHTING				X	X	X			X			X	

NOTES:

EXHAUST FAN

POINT DESCRIPTION	HARDWARE: ANALOG INPUT (AI)	HARDWARE: ANALOG OUTPUT (AO)	HARDWARE: DIGITAL INPUT (DI)	HARDWARE: DIGITAL OUTPUT (DO)	SOFTWARE: SCHEDULE (S)	SOFTWARE: TEXT DISPLAY (T)	SOFTWARE: MODIFY VALUE (M)	SOFTWARE: ALARM (A)	SOFTWARE: LOG (L)	SOFTWARE: TREND (T)	GRAPHICS: ANIMATED (A)	GRAPHICS: DISPLAY (D)	COMMENTS
START/STOP				X	X	X						X	
FAN STATUS			X			X			X		X		

NOTES:

DUCTLESS SPLIT SYSTEM

POINT DESCRIPTION	HARDWARE: ANALOG INPUT (AI)	HARDWARE: ANALOG OUTPUT (AO)	HARDWARE: DIGITAL INPUT (DI)	HARDWARE: DIGITAL OUTPUT (DO)	SOFTWARE: SCHEDULE (S)	SOFTWARE: TEXT DISPLAY (T)	SOFTWARE: MODIFY VALUE (M)	SOFTWARE: ALARM (A)	SOFTWARE: LOG (L)	SOFTWARE: TREND (T)	GRAPHICS: ANIMATED (A)	GRAPHICS: DISPLAY (D)	COMMENTS
START/STOP				X	X	X						X	
IDU STATUS			X			X			X			X	
ODU STATUS			X			X			X			X	
ROOM TEMP	X					X			X			X	

NOTES:

ENERGY RECOVERY VENTILATOR

POINT DESCRIPTION	HARDWARE: ANALOG INPUT (AI)	HARDWARE: ANALOG OUTPUT (AO)	HARDWARE: DIGITAL INPUT (DI)	HARDWARE: DIGITAL OUTPUT (DO)	SOFTWARE: SCHEDULE (S)	SOFTWARE: TEXT DISPLAY (T)	SOFTWARE: MODIFY VALUE (M)	SOFTWARE: ALARM (A)	SOFTWARE: LOG (L)	SOFTWARE: TREND (T)	GRAPHICS: ANIMATED (A)	GRAPHICS: DISPLAY (D)	COMMENTS
OCCUPIED/SHUTDOWN COMMAND					X	X						X	
OCCUPIED/SHUTDOWN STATUS						X							
START/STOP				X	X	X						X	
SUPPLY FAN STATUS			X			X		X	X		X		
EXHAUST FAN STATUS			X			X		X	X		X		
SUPPLY FAN VFD		X				X			X		X		
RETURN FAN VFD		X				X			X		X		
SUPPLY AIR TEMP	X					X		X	X			X	
RETURN AIR TEMP	X					X			X	X		X	
OSA TEMP	X					X			X	X		X	
EXHAUST AIR TEMP	X					X			X	X		X	
WHEEL START/STOP				X		X						X	
WHEEL STOP/JOG ECONOMIZER				X		X						X	
FILTER DIFFERENTIAL PRESSURE STATUS	X					X		X				X	

NOTES:

DEDICATED OUTDOOR AIR SYSTEM

POINT DESCRIPTION	HARDWARE: ANALOG INPUT (AI)	HARDWARE: ANALOG OUTPUT (AO)	HARDWARE: DIGITAL INPUT (DI)	HARDWARE: DIGITAL OUTPUT (DO)	SOFTWARE: SCHEDULE (S)	SOFTWARE: TEXT DISPLAY (T)	SOFTWARE: MODIFY VALUE (M)	SOFTWARE: ALARM (A)	SOFTWARE: LOG (L)	SOFTWARE: TREND (T)	GRAPHICS: ANIMATED (A)	GRAPHICS: DISPLAY (D)	COMMENTS
OCCUPIED/SHUTDOWN COMMAND					X	X						X	
OCCUPIED/SHUTDOWN STATUS						X							
START/STOP					X	X						X	
SUPPLY FAN STATUS			X			X		X	X		X		
RETURN/EXHAUST FAN STATUS			X			X		X	X		X		DOAS-1, DOAS-2 ONLY
SUPPLY FAN VFD		X				X			X		X		DOAS-1, DOAS-2 ONLY
RETURN/EXHAUST FAN VFD		X				X			X		X		
CHILLED WATER VALVE		X				X			X		X		
HOT WATER VALVE		X				X			X		X		
ROOM TEMP	X					X			X	X		X	DOAS-3 ONLY
ROOM TEMP - SET POINT	X					X	X		X	X		X	DOAS-3 ONLY
SUPPLY AIR TEMP	X					X			X	X		X	
SUPPLY AIR - CALCULATED SET POINT						X							
ECONOMIZER		X				X						X	
FILTER DIFFERENTIAL PRESSURE STATUS	X					X		X				X	

NOTES:

LAB EXHAUST FAN

POINT DESCRIPTION	HARDWARE: ANALOG INPUT (AI)	HARDWARE: ANALOG OUTPUT (AO)	HARDWARE: DIGITAL INPUT (DI)	HARDWARE: DIGITAL OUTPUT (DO)	SOFTWARE: SCHEDULE (S)	SOFTWARE: TEXT DISPLAY (T)	SOFTWARE: MODIFY VALUE (M)	SOFTWARE: ALARM (A)	SOFTWARE: LOG (L)	SOFTWARE: TREND (T)	GRAPHICS: ANIMATED (A)	GRAPHICS: DISPLAY (D)	COMMENTS
OCCUPIED/SHUTDOWN COMMAND					X	X						X	
OCCUPIED/SHUTDOWN STATUS						X							
START/STOP				X	X	X						X	
FAN STATUS			X			X		X	X		X		
FAN VFD		X				X			X		X		
STATIC PRESSURE	X					X			X				
STATIC PRESSURE - SET POINT		X				X		X	X	X		X	
SURE-AIRE FLOW STATION	X					X		X	X			X	

NOTES:

AIR HANDLER

POINT DESCRIPTION	HARDWARE: ANALOG INPUT (AI)	HARDWARE: ANALOG OUTPUT (AO)	HARDWARE: DIGITAL INPUT (DI)	HARDWARE: DIGITAL OUTPUT (DO)	SOFTWARE: SCHEDULE (S)	SOFTWARE: TEXT DISPLAY (T)	SOFTWARE: MODIFY VALUE (M)	SOFTWARE: ALARM (A)	SOFTWARE: LOG (L)	SOFTWARE: TREND (T)	GRAPHICS: ANIMATED (A)	GRAPHICS: DISPLAY (D)	COMMENTS
OCCUPIED/SHUTDOWN COMMAND					X	X						X	
OCCUPIED/SHUTDOWN STATUS						X							
START/STOP				X	X	X						X	
FAN STATUS			X			X		X	X		X		
CHILLED WATER VALVE		X				X			X		X		
HOT WATER VALVE		X				X			X		X		
ROOM TEMP	X					X			X	X		X	
ROOM TEMP - SET POINT	X					X	X		X	X		X	SET POINT ADJUSTABLE BY OCCUPANT
SUPPLY AIR TEMP	X					X			X	X		X	
SUPPLY AIR - CALCULATED SET POINT						X							
FILTER DIFFERENTIAL PRESSURE STATUS	X					X		X				X	

NOTES:

HEAT PUMP CHILLER

POINT DESCRIPTION	HARDWARE: ANALOG INPUT (AI)	HARDWARE: ANALOG OUTPUT (AO)	HARDWARE: DIGITAL INPUT (DI)	HARDWARE: DIGITAL OUTPUT (DO)	SOFTWARE: SCHEDULE (S)	SOFTWARE: TEXT DISPLAY (T)	SOFTWARE: MODIFY VALUE (M)	SOFTWARE: ALARM (A)	SOFTWARE: LOG (L)	SOFTWARE: TREND (T)	GRAPHICS: ANIMATED (A)	GRAPHICS: DISPLAY (D)	COMMENTS
START/STOP				X	X	X						X	
CHILLED WATER TEMP - RETURN	X					X			X	X		X	
CHILLED WATER TEMP - SUPPLY	X					X			X	X		X	
COMPRESSOR STATUS			X			X		X	X	X		X	PROVIDE STATUS FOR EACH COMPRESSOR
INTERFACE TO CHILLER MFR PANEL			X			X		X				X	SEE NOTE 1
CHILLED WATER SUPPLY TEMP RESET		X				X				X		X	OR RETURN TEMP RESET AS APPLICABLE
CHILLED WATER SUPPLY TEMP SET POINT		X				X	X				X		
HOT WATER TEMP - RETURN	X					X			X	X		X	
HOT WATER TEMP - SUPPLY	X					X			X	X		X	
HOT WATER SUPPLY TEMP RESET		X				X			X			X	OR RETURN TEMP RESET AS APPLICABLE
HOT WATER SUPPLY TEMP SET POINT		X				X	X				X		
CHILLER LOCKOUT SET POINT		X				X	X				X		
CHILLER LOCKOUT				X		X							
CHILLER LOCKOUT STATUS			X			X			X			X	
FLOW SENSOR STATUS			X			X		X				X	

NOTES:

1. ANY ALARM OR TROUBLE SIGNAL FROM MFR PANEL SHALL BE REPORTED AS GENERAL ALARM (ONE POINT FOR ALL ALARM OR TROUBLE SIGNALS)

PUMP

POINT DESCRIPTION	HARDWARE: ANALOG INPUT (AI)	HARDWARE: ANALOG OUTPUT (AO)	HARDWARE: DIGITAL INPUT (DI)	HARDWARE: DIGITAL OUTPUT (DO)	SOFTWARE: SCHEDULE (S)	SOFTWARE: TEXT DISPLAY (T)	SOFTWARE: MODIFY VALUE (M)	SOFTWARE: ALARM (A)	SOFTWARE: LOG (L)	SOFTWARE: TREND (T)	GRAPHICS: ANIMATED (A)	GRAPHICS: DISPLAY (D)	COMMENTS
START/STOP				X	X	X						X	
STATUS			X			X		X	X		X		
VARIABLE FREQUENCY DRIVE		X				X	X		X			X	
PRESSURE SENSOR	X					X			X			X	
PRESSURE SENSOR SET POINT		X				X	X		X			X	

NOTES:

FAN COIL

POINT DESCRIPTION	HARDWARE: ANALOG INPUT (AI)	HARDWARE: ANALOG OUTPUT (AO)	HARDWARE: DIGITAL INPUT (DI)	HARDWARE: DIGITAL OUTPUT (DO)	SOFTWARE: SCHEDULE (S)	SOFTWARE: TEXT DISPLAY (T)	SOFTWARE: MODIFY VALUE (M)	SOFTWARE: ALARM (A)	SOFTWARE: LOG (L)	SOFTWARE: TREND (T)	GRAPHICS: ANIMATED (A)	GRAPHICS: DISPLAY (D)	COMMENTS
OCCUPIED/SHUTDOWN COMMAND					X	X						X	
OCCUPIED/SHUTDOWN STATUS						X							
START/STOP				X	X	X						X	NOTES 1 & 2
FAN STATUS			X			X		X	X		X		
CHILLED WATER VALVE		X				X			X		X		
HOT WATER VALVE		X				X			X		X		
ROOM TEMP	X					X			X	X		X	
ROOM TEMP - SET POINT	X					X	X		X	X		X	SET POINT ADJUSTABLE BY OCCUPANT
SUPPLY AIR TEMP	X					X			X	X		X	
HEAT/COOL MODE				X		X			X				
RETURN AIR TEMP	X					X	X		X	X		X	

NOTES:

1. FAN SHALL RUN CONTINOUS DURING OCCUPIED HOURS FOR FC 1-1, 1-2, 1-3, 1-4, 1-5, 1-6, 1-7, 1-10, 1-11, 1-15, 1-16, 2-1, 2-2, 2-3, 2-4, 2-5
2. FAN SHALL CYCLE ON/OFF WITH LOAD FOR FC 1-8, 1-9, 1-12, 1-13, 1-14, 2-6, 2-7, 2-8, 2-9, 2-10, 2-11, 2-12

IDENTIFICATION STAMP
DIV. OF THE STATE ARCHITECT
APP: 02-122821 INC: 2
REVIEWED FOR
SS ☑ FLS ☑ ACS ☑
DATE: 11/20/2025

Teter, Inc. expressly reserves its common law copyright and other property rights in these plans. This document, the ideas and designs incorporated herein, as an instrument of professional service, is not to be used in whole or part, for any other project without prior written authorization.

MARK	DATE	DESCRIPTION
A	11/13/2025	DSA BACKCHECK

TETER, INC.
ARCHITECTS ENGINEERS CONNECTED
FRESNO HEADQUARTERS
VISALIA | BAKERSFIELD | MODESTO | SAN LUIS OBISPO

VISALIA CAMPUS UNIVERSITY CENTER
COLLEGE OF THE SEQUOIAS
915 S. MOONEY BLVD
VISALIA, CALIFORNIA

DRAWING TITLE
MECHANICAL CONTROLS

PROJECT NO.
22-12498

DRAWING
M400.2

\\tet-file1\Users\zachary.davis_TETR\Documents\12498-M-UC_zachary.davis8WYRV.rvt
PLOT DATE: 11/10/2025 4:33:29 PM

\\tet-file1\Users\zachary.davis_TETR\Documents\12498-M-UC_zachary.davisBIWYRV.rvt

CONTROLS DETAILS

LEGEND

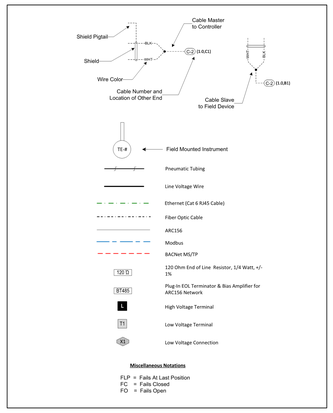

TAG DESCRIPTIONS

AA	Remote Annunciator Module & Auto Dialer	P	Pressure Probe
ALC	Automated Logic Controller	PDS	Pressure Differential Switch
ASA	Smoke Detector	PDT	Pressure Differential Transmitter
CR	Control Relay	PS	Pressure Switch
ENC	Enclosure	PT	Pressure Transmitter
ES	Direct Current Power Supply	QT	Gas Transmitter
FCV	Flow Control Valve / Damper Actuator	ST	Speed Transmitter
FE	Flow Element	SUB	Subpanel
FS	Flow Switch	TE	Temperature Element
FT	Flow Transmitter	TS	Temperature Switch
G	Generic Device	TSH	Temperature Switch High
IP	Electro-Pneumatic Transducer	TSL	Temperature Switch Low
IS	Current Switch	TT	Temperature Transmitter
ISE	Circuit Breaker	TY	Dew Pt./Enthaply/Wet Bulb Transducer
IT	Current Transducer	V	Valve
JT	BTU Meter	VT	Vibration Transmitter / Switch
JY	Power Meter	X	Unclassified
KS	Electronic Timeclock	XF	Transformer
LS	Level Switch	YKS	Position Transmitter
LT	Level Transmitter	YL	Position Transmitter
MS	Humidistat	YS	Leak Detector
MT	Humidity Transmitter	YSE	Emergency Stop
MTE	Humidity Transmitter w/ Temperature Element	YY	Transducer
MTT	Humidity Transmitter w/ Temperature Transmitter	ZS	Position Indicating Switch
N	Accessories	ZT	Position Transmitter
NY	Network Device		

DRAWING NO.: SYM.1

ARC156 / MSTP/ MODBUS COMMUNICATIONS CABLE

Windy City Part Number	043006AL-S
CABLE SPECIFICATIONS	
Description	1 Pair, 22 AWG Tinned Copper Shielded RS-232, RS-422 Low-Capacitance Communication, Instrumentation and Special Application Plenum Cable
Conductor Description	22 AWG (7/30) Tinned Copper
Insulation	FEP .020"
Color Code	Black/White
Shield	Aluminum Mylar Foil
Drain Wire	24 AWG Stranded Tinned Copper
Jacket	Low-Smoke PVC .018"
Marking	ARC156 A B C D E 0 1 2 3 4 5 6 7 8 9 LO-CAP 12.5 PF/FT CL3P OR CMP 22 AWG 75 C. (UL)
Overall Diameter	.174" Nom.
Conductor DCR	18.1 Ohms/Mft.
Capacitance	12.5 pF/ft. Nom.
Impedance	100 Ohms Nom.
Velocity of Propagation	N/A
Temperature and Voltage Rating	75 C / 300 Volt
Cable Weight	18 Lbs/Mft.
Agency Approvals:	
UL Subject 444 and NEC Article 800 Type CMP or FPLP Communication Cable.	
Approved For Plenum Use Without Conduit Per NFPA 262 Flame Test	
ALL SPECIFIED CABLE IS AVAILABLE FROM:	
	Windy City Wire Inc.
	4250 Madison Street
	Hillside, Illinois 60162
	Phone: 800-379-1191
	Fax: 708-493-1380
	Web: windycitywire.com
SUBSTITUTIONS MUST BE APPROVED EQUAL	

2 PAIR - 2 CONDUCTOR SHIELDED - RNET

Windy City Wire Part Number	160100-S	160100-30S
Cable Specifications		
Jacket Color:	White	Yellow
Description:	18 AWG 2 Pair Bare Copper, Individually Shielded Plenum, UL Subject 444, Type CMP, C(UL) or FPLP UL	
Conductor Description:	18 (7/26 Bare Copper)	
Insulation:	Low-Smoke PVC .008"	
Color Code:	Black/Red & White/Green	
Shield:	Each Pair Aluminum Polyester Foil - 100% Coverage	
Drain Wire:	24 AWG 7 Strand Tinned Copper	
Jacket:	Low-Smoke PVC .018"	
Marking:	Temperature Control System, 22 AWG CMP (UL) C(UL).	
Overall Diameter:	.195" Nom	
Capacitance:	68 pF/ft.	
Temperature and Voltage Rating:	75 C / 300Volt	
Cable Weight:	35 Lbs/Mft.	
Agency Approvals:		
NEC Article 800; 725, UL CMP, C(UL) or FPLP UL		
Approved For Plenum Use Without Conduit Per NFPA 262 Flame Test		

3 CONDUCTOR SHIELDED - I/O Points

Windy City Wire Part Number	0023350-S	002330-S
Cable Specifications		
Jacket Color:	Purple	White
Description:	18 AWG 3 Conductor Bare Copper, Shielded Plenum, UL Subject 444, Type CMP, C(UL) or FPLP UL	
Conductor Description:	18 (7/26 Bare Copper)	
Insulation:	Low-Smoke PVC .008"	
Color Code:	Black/White/Red	
Shield:	Overall Aluminum Polyester Foil - 100% Coverage	
Drain Wire:	24 AWG 7 Strand Tinned Copper	
Jacket:	Low-Smoke PVC .018"	
Marking:	Temperature Control System, 18 AWG CMP (UL) C(UL).	
Overall Diameter:	.168" Nom.	
Conductor DCR:	6.66 Ohms/Mft.	
Capacitance:	68 pF/ft Nom.	
Impedance:	28 Ohms/Mft.	
Temperature and Voltage Rating:	75 C / 300Volt	
Cable Weight:	26 Lbs/Mft.	
Agency Approvals:		
NEC Article 800; 725, UL CMP, C(UL) or FPLP UL		
Approved For Plenum Use Without Conduit Per NFPA 262 Flame Test		

2 CONDUCTOR SHIELDED - I/O Points

Windy City Wire Part Number	0023250-S	002320-S
Cable Specifications		
Jacket Color:	Purple	White
Description:	18 AWG 2 Conductor Bare Copper Shielded Plenum, UL Subject 444, Type CMP, C(UL) or FPLP UL	
Conductor Description:	18 (7/26 Bare Copper)	
Insulation:	Low-Smoke PVC .008"	
Color Code:	Black/White	
Shield:	Overall Aluminum Polyester Foil - 100% Coverage	
Drain Wire:	24 AWG 7 Strand Tinned Copper	
Jacket:	Low-Smoke PVC .018"	
Marking:	Temperature Control System, 18 AWG CMP (UL) C(UL).	
Overall Diameter:	.158" Nom.	
Conductor DCR:	6.66 Ohms/Mft.	
Capacitance:	68 pF/ft	
Impedance:	28 Ohms/Mft.	
Temperature and Voltage Rating:	75 C / 300Volt	
Cable Weight:	21 Lbs/Mft.	
Agency Approvals:		
NEC Article 800; 725, UL CMP, C(UL) or FPLP UL		
Approved For Plenum Use Without Conduit Per NFPA 262 Flame Test		

ETHERNET - CAT 6

Windy City Wire Part Number	5566005
CABLE SPECIFICATIONS	
Description:	23 AWG Category 6 Unshielded Twisted Pair (UTP) Cable For Data Transmissions up to 250MHz. This Cable is Plenum Rated and Verified to Category 6 Electricals.
Conductor Description:	23 AWG Solid Bare Copper
Insulation:	FEP
Color Code:	White-Blue/Blue, White-Orange/Orange, White-Green/Green, White-Brown/Brown
Jacket:	Low Smoke PVC
Marking:	A B C D E 0 1 2 3 4 5 6 7 8 9 (F) CMP (UL) C(UL) 4PR 23 AWG - - ETL VERIFIED TO TIA/EAI-568.B.2-1 UPT CAT 6
Max. Conductor DCR	9.38 Ohms/100m(328 Ft) @ 20C Max.
Max. Mutual Capacitance	5.6 nF/100m (328 Ft) @ 1 kHz Nom.
Characteristic Impedance	100 + 15 Ohms (1-250 MHz)
Velocity of Propagation	72% Nom.
Voltage	300 Volts
Flame Rating:	
Approved For Plenum Use Without Conduit Per NFPA 262 Flame Test	
Agency Approvals:	
UL Listed Type CMP, C(UL)	

DRAWING NO.: WIRE.1

ARCNET - Network Comm 156K
A/C - Alternating Current
ACU - Air Conditioning Unit
ADA - Americans with Disabilities Act
AFF - Above Finished Floor
AHU - Air Handling Unit
AI - Analog Input
ALM - Alarm
AMP - Ampere
AO - Analog Output
ATFP - Anti-Terrorism Fire Protection
AUTO - Automatic
AUX - Auxiliary
AWG - American Wire Gauge
BAI - BACnet Analog Input
BAO - BACnet Analog Output
BAS - Building Automation System
BBI - BACnet Binary Input
BBO - BACnet Binary Output
BFF - Below Finished Floor
BH - Basin Heater
BKUP - Backup
BLR - Boiler
BOM - Bill Of Materials
BTU - British Thermal Units
C - Celsius
CAV - Constant Air Volume
CCW - Counter Clockwise
CD - Cooling Deck
CFM - Cubic Feet Per Minute
CHIV - Chiller Isolation Valve
CHLR - Chiller
CHW - Chilled Water
CHWP - Chilled Water Pump
CHWR - Chilled Water Return
CHWS - Chilled Water Supply
CHWV - Chilled Water Valve
CM - Control Module
COND - Condenser
CRAC - Computer Room Air Conditioner
CRAH - Computer Room Air Handler
CRU - Computer Room Unit
CS - Current Switch
CT - Current Transducer
CTM - Current Transmitter
CTRL - Control
CTX - Current Transformer
CU - Condensing Unit
CUH - Cabinet Unit Heater
CW - Clockwise
CNDW - Condenser Water
CWBV - Condenser Water Bypass Valve
CWIV - Condenser Water Isolation Valve
CWP - Condenser Water Pump
CWR - Condenser Water Return
CWS - Condenser Water Supply
DC - Dry Contact
D/C - Direct Current
DA - Discharge Air
DAT - Discharge Air Temperature
DD - Double Duct
DDC - Direct Digital Controls
DH - Duct Heater
DI - Digital Input
DMPR - Damper
DO - Digital Output
DP - Differential Pressure
DPDT - Double Pole Double Throw
DPS - Diferential Pressure Switch
DPST - Double Pole Single Throw
DPT - Diferential Pressure Transducer
DSP - Duct Static Pressure
DWG - Drawing
DX - Direct Expansion
E - Existing
EA - Exhaust Air
EAD - Exhaust Air Damper
ECON - Economizer
EDH - Electric Duct Heater
EF - Exhaust Fan
EPO - Emergency Power Of
EVAP - Evaporator
F - Fahrenheit
FBO - Furnished by Others
FCU - Fan Coil Unit
FM-200 - Chemical Fire Suppression
FMP - Field Module Panel
FO - Fuel Oil
FOP - Fuel Oil Pump
FS - Flow Switch
G or GND- Ground
GEN - Generator
GPM - Gallons Per Minute
H - Hot (AC Voltage)
H2 - Hydrogen
HD - Heating Deck
HGB - Hot Gas Bypass
HOA - Hand/Off/Auto
HP - Heat Pump
HRU - Heat Recovery Unit
HTX - Heat Exchanger
HU - Humidifier
HW - Hot Water
HWP - Hot Water Pump
HWR - Hot Water Return
HWS - Hot Water Supply
I/O - Input/Output
IAQ - Indoor Air Quality
IP - Internet Protocol
ISO - Isolation
L - Line Voltage
LL - Liquid Level
LS - LogiStat
LVL - Level
mA - Milliamp
MAD - Mixed Air Damper
MAT - Mixed Air Temperature
MAU - Makeup Air Unit
MAX - Maximum
MGR - Manager
MIN - Minimum
MISC - Miscellaneous
N - Neutral
NC - Normally Closed
NEC - National Electric Code
NO - Normally Open
OA - Outdoor Air
OAD - Outdoor Air Damper
OAH - Outdoor Air Humidity
OAT - Outdoor Air Temperature
OAT/H - Outdoor Air Temperature /Humidity
OBD - Opposed Blade Damper
OPS - Oil Pressure Switch
PAC - Packaged Air Conditioning Unit
PBD - Parallel Blade Damper
PCHWP - Primary Chilled Water Pump
PCWP - Primary Condenser Water Pump
PDU - Power Distribution Unit
PIU - Powered Induction Unit
PMP - Pump
PNL - Panel
POS - Position
PPM - Parts Per Million
PS - Power Switch
PWR - Power
R - Relay
RA - Return Air
RAD - Return Air Damper
RET - Return
REV - Revision
RF - Return Fan
RH - Relative Humidity
RM - Room
RTD - Resistance Temperature Detectors
RTU - Rooftop Unit
S - Shield
S/S - Start / Stop
SA - Supply Air
SAT - Supply Air Temperature
SCHWP - Secondary Chilled Water Pump
SCHWR - Secondary Chilled Water Return
SCHWS - Secondary Chilled Water Supply
SCWP - Secondary Condenser Water Pump
SD - Smoke Detector
SF - Supply Fan
SP - Static Pressure
SPDT - Single Pole Double Throw
SPST - Single Pole Single Throw
SSP - System Service Provider
ST - Status
STP - Set point
STS - Static Transfer Switch
SUP - Supply
SW - Switch
T/S - Twisted Shielded
TB - Terminal Block
TD - Time Delay
TEMP - Temperature
TH - Thermistor
TP - Total Pressure
TPI - Third Party Interface
TWR - Cooling Tower
TX - Transformer
UH - Unit Heater
UL - Underwriters Laboratories
UNET - U-Card Comm Network
UPS - Un-interruptible Power Supply
UST - Underground Storage Tank
UV - Unit Ventilator
VA - Apparent Power (Voltage * Amperage)
VAC - AC Voltage
VAV - Variable Air Volume
VD - Volume Damper
VDC - DC Voltage
VESDA - Very Early Smoke Detecting Apparatus
VFD - Variable Frequency Drive
VLV - Valve
VP - Velocity Pressure
VVTU - Variable Volume Terminal Unit
"WC - Inches of Water Column
W - Watt
W/ - With
WB - Wet Bulb
W/O - Without
WSHP - Water Source Heat Pump
XFMR – Transformer
ZD - Zone Damper

DRAWING NO.:ABBR.1

Building Gateway

Points List - Active				
Controller	*MAC*	*Point Number*	*Point Name*	*Range*
G5CE	99	RNET	Outside Air Temp	RNET

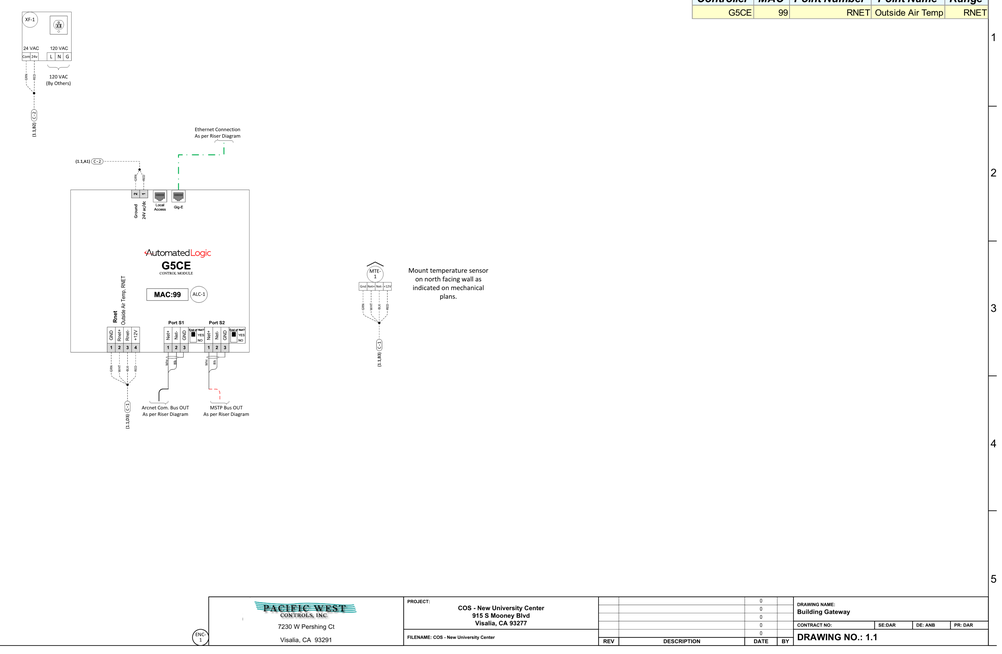

PACIFIC WEST CONTROLS, INC. 7230 W Pershing Ct Visalia, CA 93291	PROJECT: COS - New University Center 915 S Mooney Blvd Visalia, CA 93277			0		DRAWING NAME: Building Gateway	
				0			
				0			
				0		CONTRACT NO:	SE:DAR / DE: ANB / PR: DAR
				0			
	FILENAME: COS - New University Center			0		DRAWING NO.: 1.1	
		REV	DESCRIPTION	DATE	BY		

IDENTIFICATION STAMP
DIV. OF THE STATE ARCHITECT
APP: 02-122821 INC: 2
REVIEWED FOR
SS ☑ FLS ☑ ACS ☑
DATE: 11/20/2025

Teter, Inc. expressly reserves its common law copyright and other property rights in these plans. This document, the ideas and designs incorporated herein, as an instrument of professional service, is not to be used in whole or part, for any other project without prior written authorization.

MARK	DATE	DESCRIPTION
A.	11/13/2025	DSA BACKCHECK

TETER, INC.
FRESNO HEADQUARTERS
VISALIA | BAKERSFIELD | MODESTO | SAN LUIS OBISPO
ARCHITECTS ENGINEERS CONNECTED

VISALIA CAMPUS UNIVERSITY CENTER
COLLEGE OF THE SEQUOIAS
915 S. MOONEY BLVD
VISALIA, CALIFORNIA

DRAWING TITLE
MECHANICAL CONTROLS

PROJECT NO.
22-12498

DRAWING
M401.2

PLOT DATE: 11/10/2025 4:33:30 PM

CONTROLS DETAILS

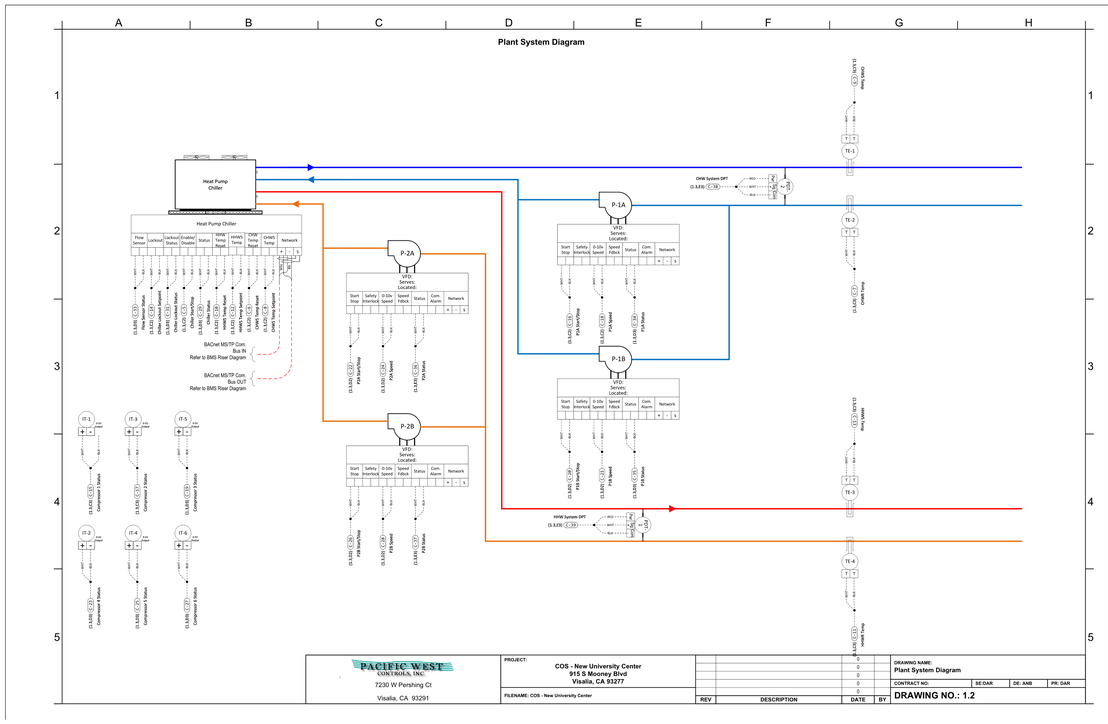

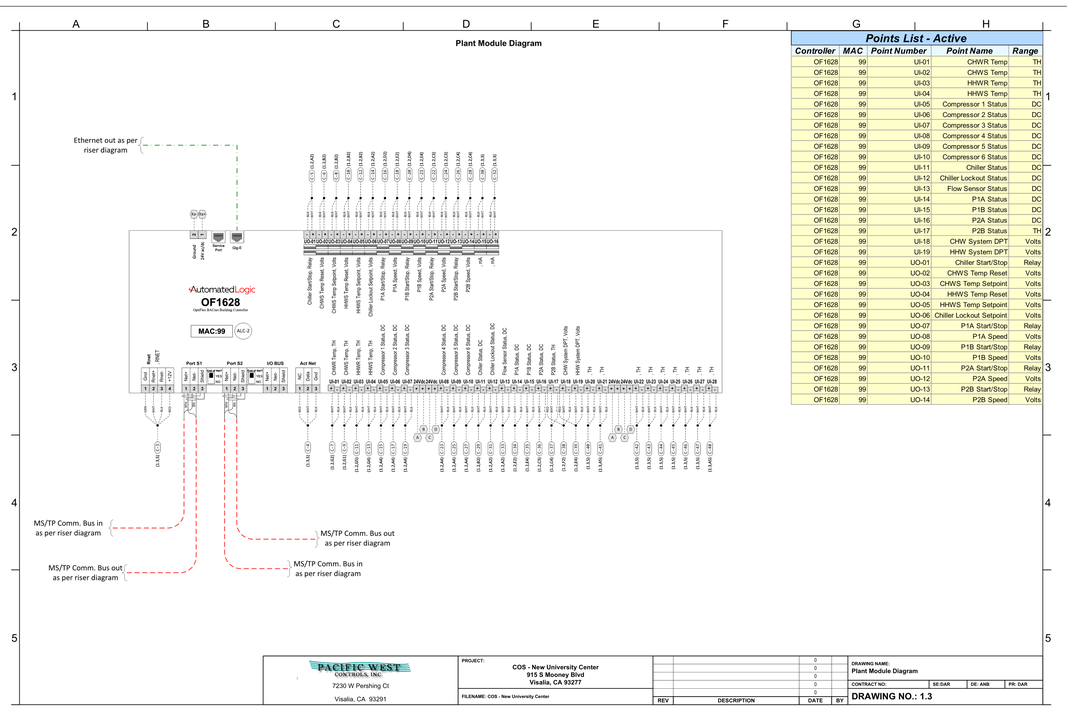

Points List - Active				
Controller	MAC	Point Number	Point Name	Range
OF1628	99	UI-01	CHWR Temp	TH
OF1628	99	UI-02	CHWS Temp	TH
OF1628	99	UI-03	HHWR Temp	TH
OF1628	99	UI-04	HHWS Temp	TH
OF1628	99	UI-05	Compressor 1 Status	DC
OF1628	99	UI-06	Compressor 2 Status	DC
OF1628	99	UI-07	Compressor 3 Status	DC
OF1628	99	UI-08	Compressor 4 Status	DC
OF1628	99	UI-09	Compressor 5 Status	DC
OF1628	99	UI-10	Compressor 6 Status	DC
OF1628	99	UI-11	Chiller Status	DC
OF1628	99	UI-12	Chiller Lockout Status	DC
OF1628	99	UI-13	Flow Sensor Status	DC
OF1628	99	UI-14	P1A Status	DC
OF1628	99	UI-15	P1B Status	DC
OF1628	99	UI-16	P2A Status	DC
OF1628	99	UI-17	P2B Status	TH
OF1628	99	UI-18	CHW System DPT	Volts
OF1628	99	UI-19	HHW System DPT	Volts
OF1628	99	UO-01	Chiller Start/Stop	Relay
OF1628	99	UO-02	CHWS Temp Reset	Volts
OF1628	99	UO-03	CHWS Temp Setpoint	Volts
OF1628	99	UO-04	HHWS Temp Reset	Volts
OF1628	99	UO-05	HHWS Temp Setpoint	Volts
OF1628	99	UO-06	Chiller Lockout Setpoint	Volts
OF1628	99	UO-07	P1A Start/Stop	Relay
OF1628	99	UO-08	P1A Speed	Volts
OF1628	99	UO-09	P1B Start/Stop	Relay
OF1628	99	UO-10	P1B Speed	Volts
OF1628	99	UO-11	P2A Start/Stop	Relay
OF1628	99	UO-12	P2A Speed	Volts
OF1628	99	UO-13	P2B Start/Stop	Relay
OF1628	99	UO-14	P2B Speed	Volts

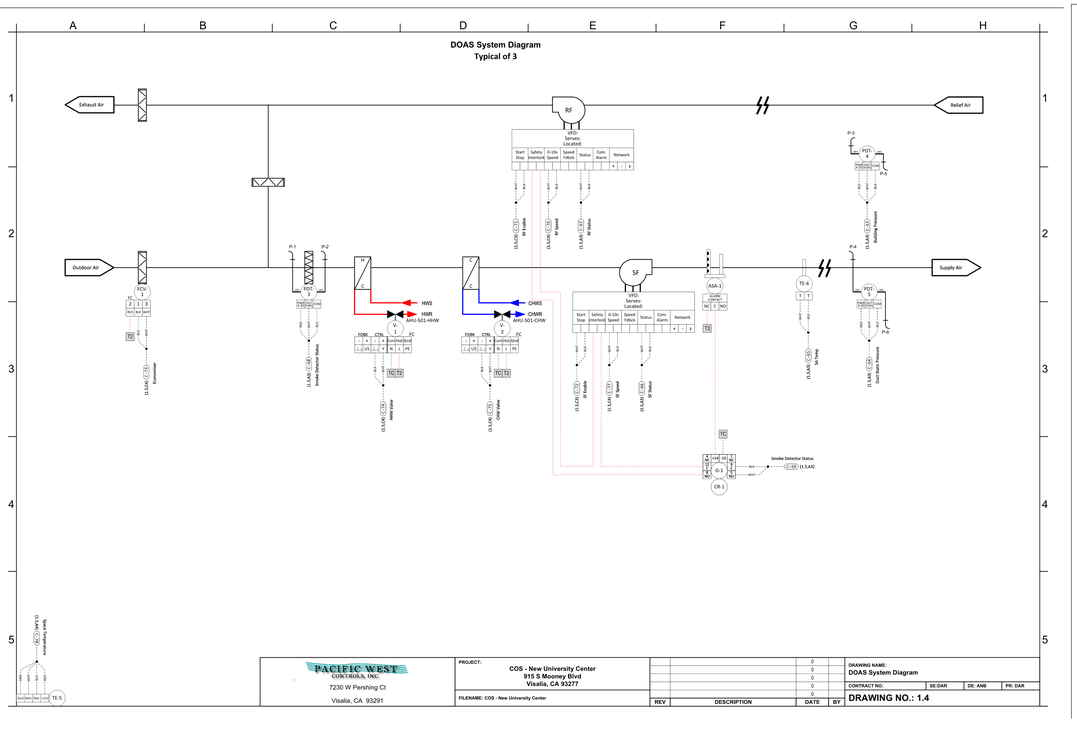

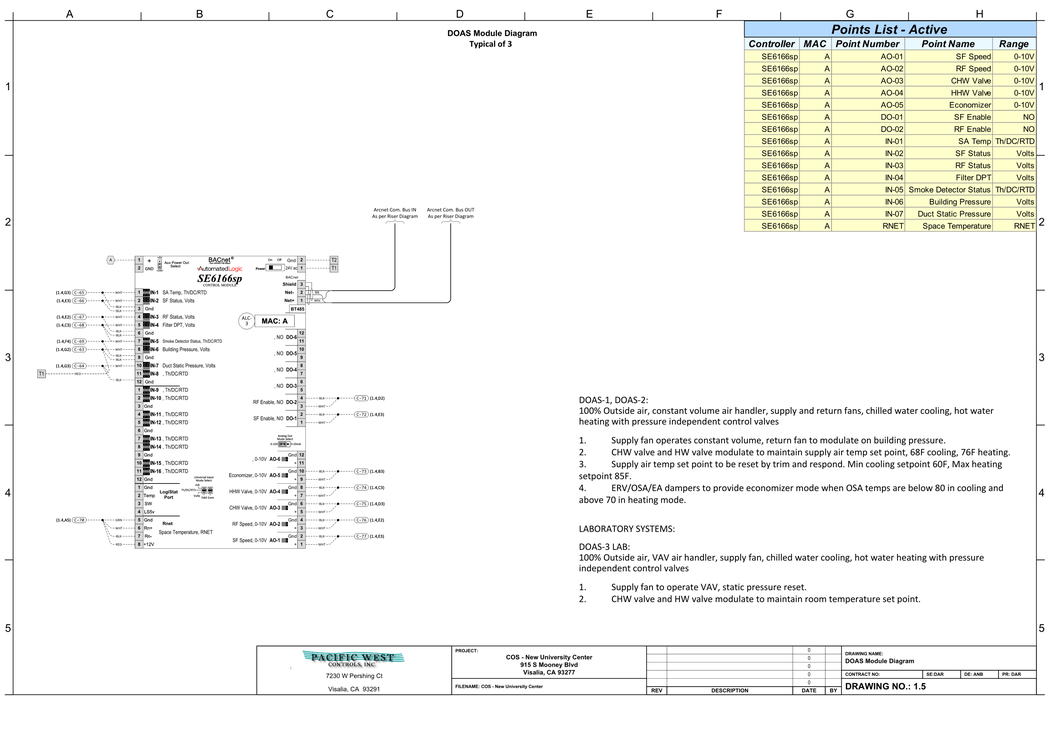

Points List - Active				
Controller	MAC	Point Number	Point Name	Range
SE6166sp	A	AO-01	SF Speed	0-10V
SE6166sp	A	AO-02	RF Speed	0-10V
SE6166sp	A	AO-03	CHW Valve	0-10V
SE6166sp	A	AO-04	HHW Valve	0-10V
SE6166sp	A	AO-05	Economizer	0-10V
SE6166sp	A	DO-01	SF Enable	NO
SE6166sp	A	DO-02	RF Enable	NO
SE6166sp	A	IN-01	SA Temp	Th/DC/RTD
SE6166sp	A	IN-02	SF Status	Volts
SE6166sp	A	IN-03	RF Status	Volts
SE6166sp	A	IN-04	Filter DPT	Volts
SE6166sp	A	IN-05	Smoke Detector Status	Th/DC/RTD
SE6166sp	A	IN-06	Building Pressure	Volts
SE6166sp	A	IN-07	Duct Static Pressure	Volts
SE6166sp	A	RNET	Space Temperature	RNET

DOAS-1, DOAS-2:
100% Outside air, constant volume air handler, supply and return fans, chilled water cooling, hot water heating with pressure independent control valves

1. Supply fan operates constant volume, return fan to modulate on building pressure.
2. CHW valve and HW valve modulate to maintain supply air temp set point, 68F cooling, 76F heating.
3. Supply air temp set point to be reset by trim and respond. Min cooling setpoint 60F, Max heating setpoint 85F.
4. ERV/OSA/EA dampers to provide economizer mode when OSA temps are below 80 in cooling and above 70 in heating mode.

LABORATORY SYSTEMS:

DOAS-3 LAB:
100% Outside air, VAV air handler, supply fan, chilled water cooling, hot water heating with pressure independent control valves

1. Supply fan to operate VAV, static pressure reset.
2. CHW valve and HW valve modulate to maintain room temperature set point.

IDENTIFICATION STAMP
DIV. OF THE STATE ARCHITECT
APP: 02-122821 INC: 2
REVIEWED FOR
SS ☑ FLS ☑ ACS ☑
DATE: 11/20/2025

©Teter, Inc. expressly reserves its common law copyright and other property rights in these plans. This document, the ideas and designs incorporated herein, as an instrument of professional service, is not to be used in whole or in part, for any other project without prior written authorization.

MARK	DATE	DESCRIPTION
A.	11/13/2025	DSA BACKCHECK

TETER, INC.
FRESNO HEADQUARTERS
VISALIA | BAKERSFIELD | MODESTO | SAN LUIS OBISPO
ARCHITECTS ENGINEERS CONNECTED

VISALIA CAMPUS UNIVERSITY CENTER
COLLEGE OF THE SEQUOIAS
915 S. MOONEY BLVD
VISALIA, CALIFORNIA

DRAWING TITLE
MECHANICAL CONTROLS

PROJECT NO.
22-12498

DRAWING
M402.2

PLOT DATE: 11/10/2025 4:33:31 PM

\\tet-file-1\Users\zachary.davis_TETR\Documents\12498-M-UC_zachary.davis@WYRV.rvt

\\tet-file-1\Users\zachary.davis_TETR\Documents\12498-M-UC_zachary.davis@WYRV.rvt

CONTROLS DETAILS

Air Handler Diagram

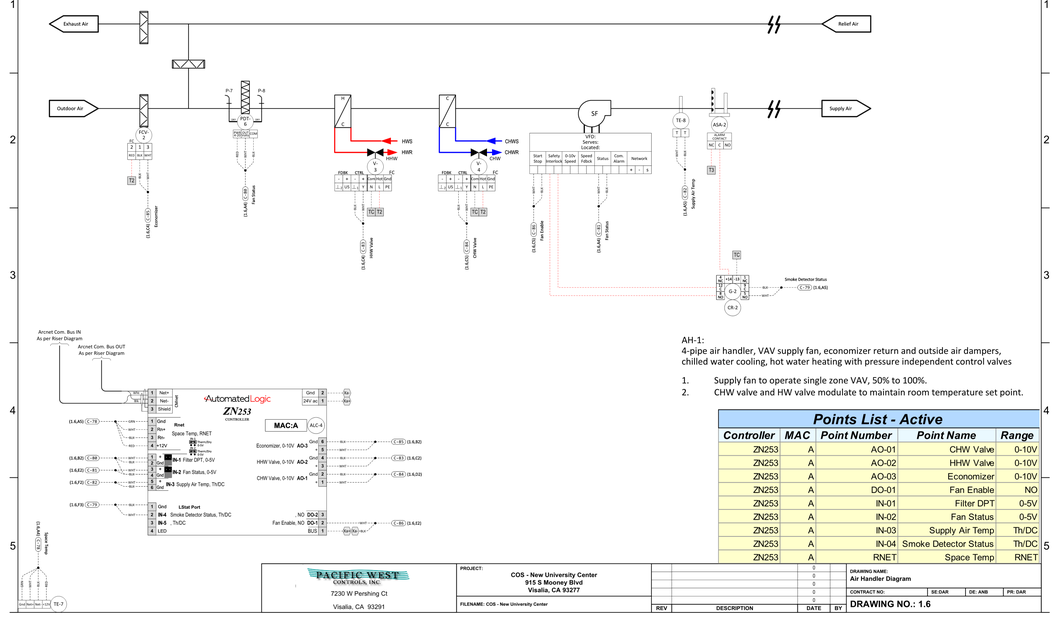

AH-1:
4-pipe air handler, VAV supply fan, economizer return and outside air dampers, chilled water cooling, hot water heating with pressure independent control valves

1. Supply fan to operate single zone VAV, 50% to 100%.
2. CHW valve and HW valve modulate to maintain room temperature set point.

Points List - Active

Controller	MAC	Point Number	Point Name	Range
ZN253	A	AO-01	CHW Valve	0-10V
ZN253	A	AO-02	HHW Valve	0-10V
ZN253	A	AO-03	Economizer	0-10V
ZN253	A	DO-01	Fan Enable	NO
ZN253	A	IN-01	Filter DPT	0-5V
ZN253	A	IN-02	Fan Status	0-5V
ZN253	A	IN-03	Supply Air Temp	Th/DC
ZN253	A	IN-04	Smoke Detector Status	Th/DC
ZN253	A	RNET	Space Temp	RNET

PACIFIC WEST CONTROLS, INC.
7230 W Pershing Ct
Visalia, CA 93291

PROJECT: COS - New University Center, 915 S Mooney Blvd, Visalia, CA 93277
FILENAME: COS - New University Center

REV	DESCRIPTION	DATE	BY

DRAWING NAME: Air Handler Diagram
CONTRACT NO: | SE:DAR | DE: ANB | PR: DAR
DRAWING NO.: 1.6

Fan Coil Diagram
Typical of 28

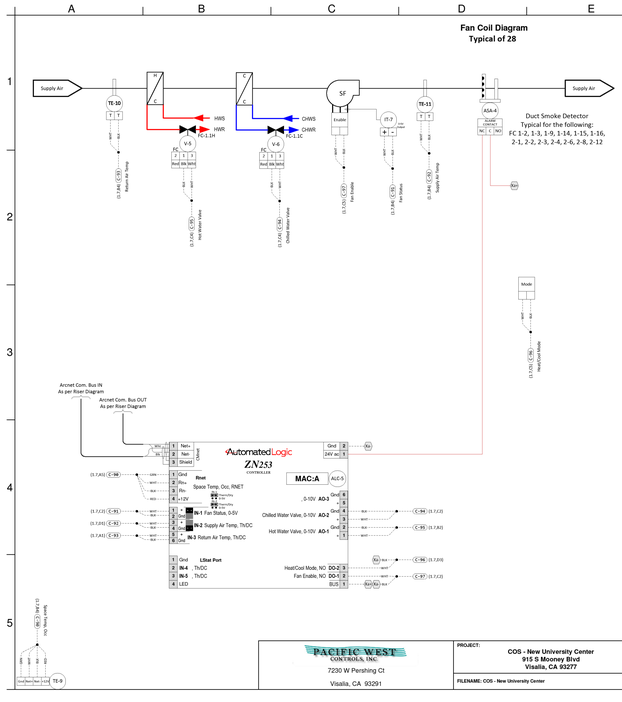

Points List - Active

Controller	MAC	Point Number	Point Name	Range
ZN253	A	AO-01	Hot Water Valve	0-10V
ZN253	A	AO-02	Chilled Water Valve	0-10V
ZN253	A	DO-01	Fan Enable	NO
ZN253	A	DO-02	Heat/Cool Mode	NO
ZN253	A	IN-01	Fan Status	0-5V
ZN253	A	IN-02	Supply Air Temp	Th/DC
ZN253	A	IN-03	Return Air Temp	Th/DC
ZN253	A	RNET	Space Temp, Occ	RNET

Fan Coils, FC 1-1, 1-2, 1-3, 1-4, 1-5, 1-6, 1-7, 1-10, 1-11, 2-1, 2-2, 2-3, 2-4, 2-5:
4-pipe fan coils with constant volume fans and pressure independent control valves

1. Fans operate constant volume, continuous during occupied hours.
2. CHW valve and HW valve modulate to maintain room temperature setpoint.

Fan Coils, FC 1-8, 1-9, 1-12, 1-13, 1-14, 2-6, 2-7, 2-8, 2-9, 2-10, 2-11, 2-12:
4-pipe fan coils with constant volume fans and pressure independent control valves

1. Fans operate constant volume, cycle on/off with room demand.
2. CHW valve and HW valve modulate to maintain room temperature setpoint.

Fan Coils: FC 1-15, FC 1-16:
4-pipe fan coils with 2-speed fans and pressure independent control valves

1. Fans operate 2-speed, low and high.
2. CHW valve and HW valve modulate to maintain room temperature setpoint.

PACIFIC WEST CONTROLS, INC.
7230 W Pershing Ct
Visalia, CA 93291

PROJECT: COS - New University Center, 915 S Mooney Blvd, Visalia, CA 93277
FILENAME: COS - New University Center

REV	DESCRIPTION	DATE	BY

DRAWING NAME: Fan Coil Diagram
CONTRACT NO: | SE:DAR | DE: ANB | PR: DAR
DRAWING NO.: 1.7

ERV System Diagram

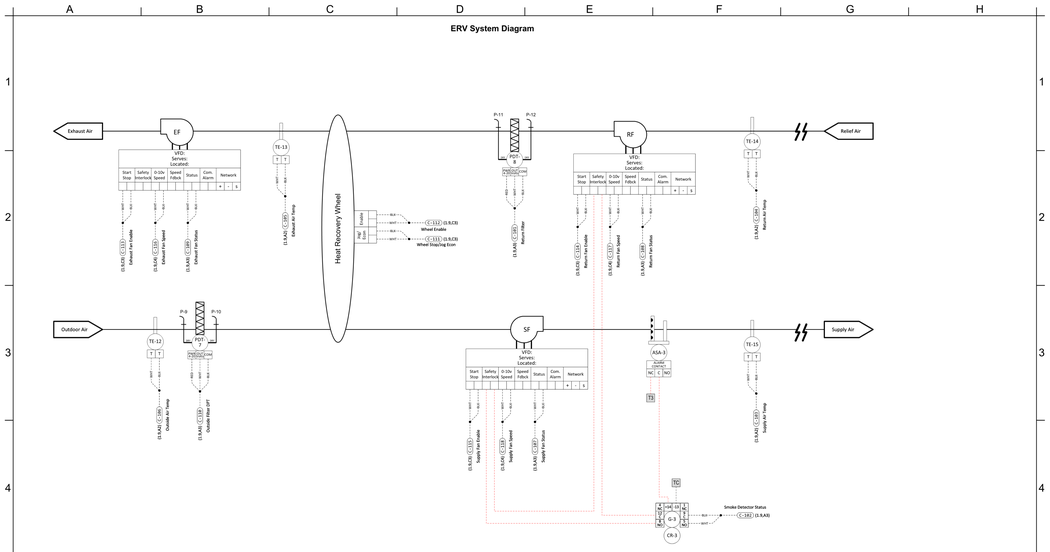

PACIFIC WEST CONTROLS, INC.
7230 W Pershing Ct
Visalia, CA 93291

PROJECT: COS - New University Center, 915 S Mooney Blvd, Visalia, CA 93277
FILENAME: COS - New University Center

REV	DESCRIPTION	DATE	BY

DRAWING NAME: ERV System Diagram
CONTRACT NO: | SE:DAR | DE: ANB | PR: DAR
DRAWING NO.: 1.8

ERV Module Diagram

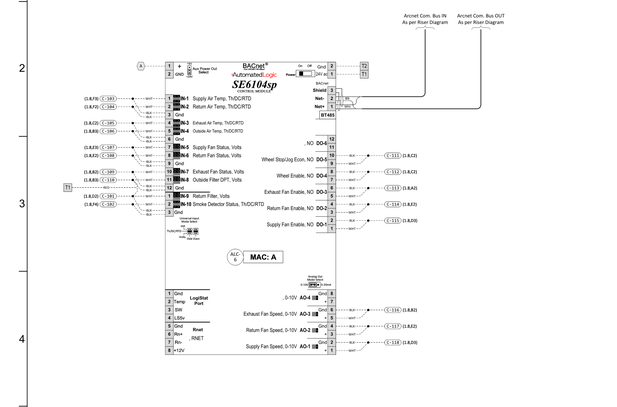

PACIFIC WEST CONTROLS, INC.
7230 W Pershing Ct
Visalia, CA 93291

PROJECT: COS - New University Center, 915 S Mooney Blvd, Visalia, CA 93277
FILENAME: COS - New University Center

REV	DESCRIPTION	DATE	BY

DRAWING NAME: ERV Module Diagram
CONTRACT NO: | SE:DAR | DE: ANB | PR: DAR
DRAWING NO.: 1.9

IDENTIFICATION STAMP
DIV. OF THE STATE ARCHITECT
APP: 02-122821 INC: 2
REVIEWED FOR
SS ☑ FLS ☑ ACS ☑
DATE: 11/20/2025

Teter, Inc. expressly reserves its common law copyright and other property rights in these plans. This document, the ideas and designs incorporated herein, as an instrument of professional service, is not to be used in whole or in part, for any other project without prior written authorization.

MARK	DATE	DESCRIPTION
A	11/13/2025	DSA BACKCHECK

TETER, INC.
FRESNO HEADQUARTERS
VISALIA | BAKERSFIELD | MODESTO | SAN LUIS OBISPO
ARCHITECTS ENGINEERS CONNECTED

VISALIA CAMPUS UNIVERSITY CENTER
COLLEGE OF THE SEQUOIAS
915 S. MOONEY BLVD
VISALIA, CALIFORNIA

DRAWING TITLE
MECHANICAL CONTROLS

PROJECT NO.
22-12498

DRAWING
M403.2

PLOT DATE: 11/10/2025 4:33:33 PM

\\tet-file-1\Users\zachary.davis_TETR\Documents\12498-M-UC_zachary.davis@WYRV.rvt

CONTROLS DETAILS

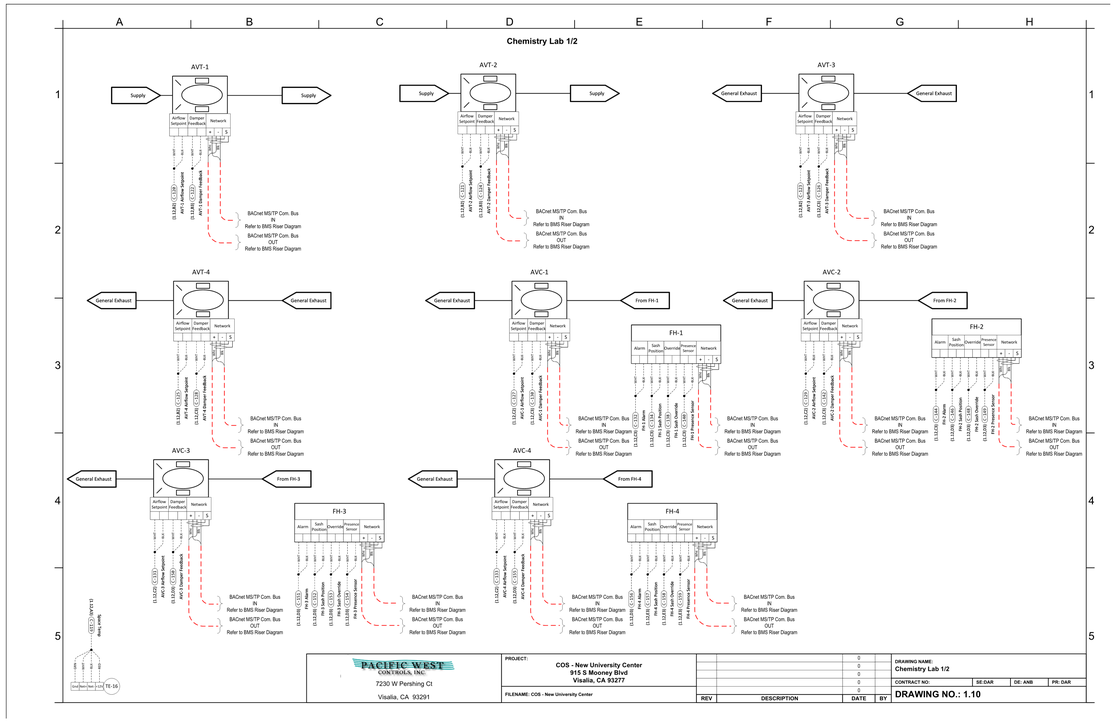

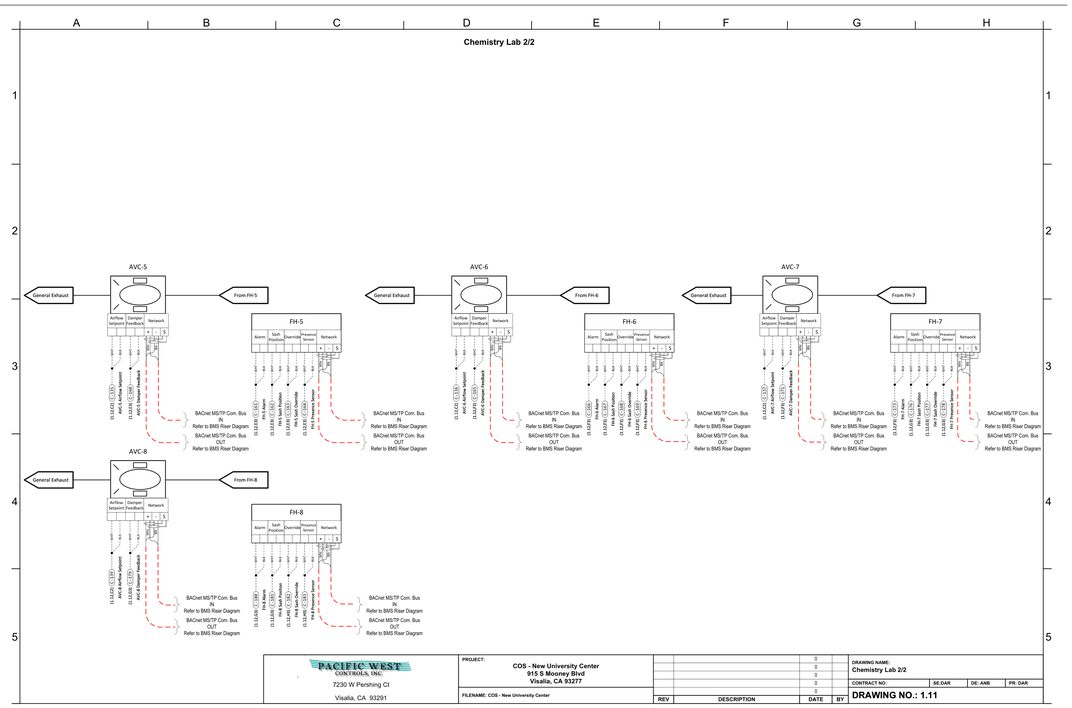

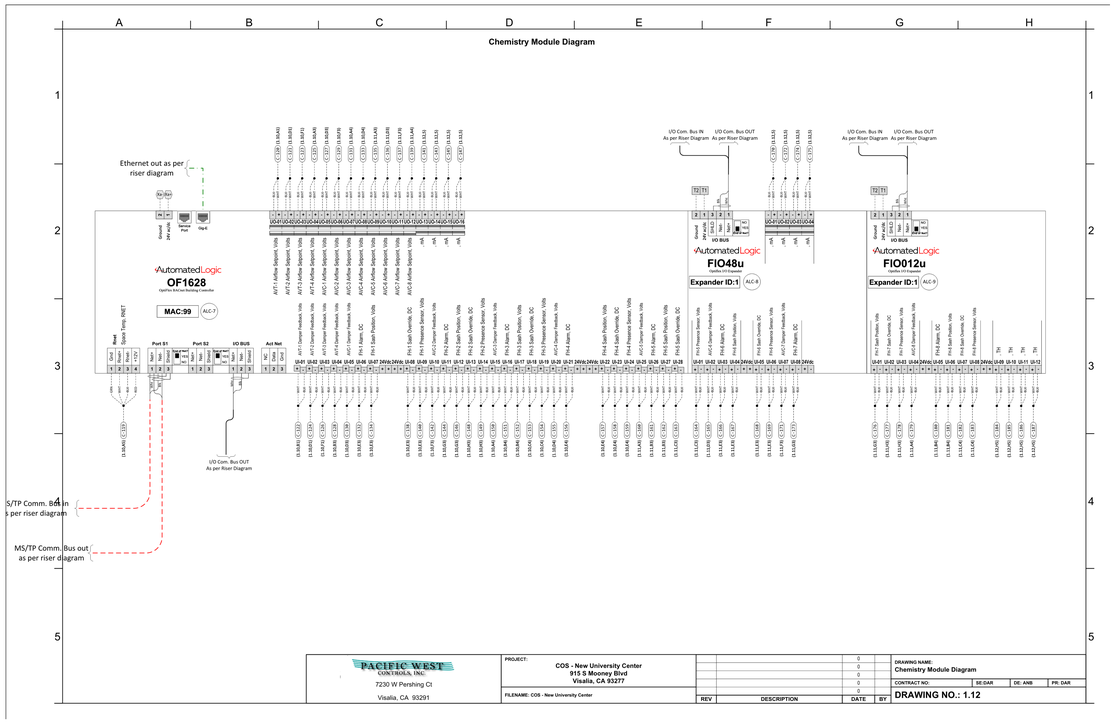

Chemistry Lab Points List

Controller	MAC	Point Number	Point Name	Range	Page	Typical Of
FIO012u		UI-01	FH-7 Sash Position	Volts	1-12	1
FIO48u		UI-01	FH-5 Presence Sensor	Volts	1-12	1
FIO012u		UI-02	FH-7 Sash Override	DC	1-12	1
FIO48u		UI-02	AVC-6 Damper Feedback	Volts	1-12	1
FIO012u		UI-03	FH-7 Presence Sensor	Volts	1-12	1
FIO48u		UI-03	AVC-8 Damper Feedback	Volts	1-12	1
FIO012u		UI-04	FH-6 Sash Position	Volts	1-12	1
FIO48u		UI-04	AVC-8 Damper Feedback	Volts	1-12	1
FIO012u		UI-05	FH-6 Sash Override	DC	1-12	1
FIO48u		UI-05	FH-8 Sash Position	Volts	1-12	1
FIO012u		UI-06	FH-6 Presence Sensor	Volts	1-12	1
FIO48u		UI-06	FH-8 Sash Override	DC	1-12	1
FIO012u		UI-07	FH-8 Damper Feedback	Volts	1-12	1
FIO48u		UI-07	AVC-7 Damper Feedback	Volts	1-12	1
FIO012u		UI-08	FH-8 Presence Sensor	Volts	1-12	1
FIO48u		UI-08	FH-7 Alarm	DC	1-12	1
OF1628	99	RNET	Space Temp	RNET	1-12	1
OF1628	99	UI-01	AVT-1 Damper Feedback	Volts	1-12	1
OF1628	99	UI-02	AVT-2 Damper Feedback	Volts	1-12	1
OF1628	99	UI-03	AVT-3 Damper Feedback	Volts	1-12	1
OF1628	99	UI-04	AVT-4 Damper Feedback	Volts	1-12	1
OF1628	99	UI-05	AVC-1 Damper Feedback	Volts	1-12	1
OF1628	99	UI-06	FH-1 Alarm	DC	1-12	1
OF1628	99	UI-07	FH-1 Sash Position	Volts	1-12	1
OF1628	99	UI-08	FH-1 Sash Override	DC	1-12	1
OF1628	99	UI-09	FH-1 Presence Sensor	Volts	1-12	1
OF1628	99	UI-10	AVC-2 Damper Feedback	Volts	1-12	1
OF1628	99	UI-11	FH-2 Alarm	DC	1-12	1
OF1628	99	UI-12	FH-2 Sash Position	Volts	1-12	1
OF1628	99	UI-13	FH-2 Sash Override	DC	1-12	1
OF1628	99	UI-14	FH-2 Presence Sensor	Volts	1-12	1
OF1628	99	UI-15	AVC-3 Damper Feedback	Volts	1-12	1
OF1628	99	UI-16	FH-3 Alarm	DC	1-12	1
OF1628	99	UI-17	FH-3 Sash Position	Volts	1-12	1
OF1628	99	UI-18	FH-3 Sash Override	DC	1-12	1
OF1628	99	UI-19	FH-3 Presence Sensor	Volts	1-12	1
OF1628	99	UI-20	AVC-4 Damper Feedback	Volts	1-12	1
OF1628	99	UI-21	FH-4 Alarm	DC	1-12	1
OF1628	99	UI-22	FH-4 Sash Position	Volts	1-12	1
OF1628	99	UI-23	FH-4 Sash Override	DC	1-12	1
OF1628	99	UI-24	FH-4 Presence Sensor	Volts	1-12	1
OF1628	99	UI-25	AVC-5 Damper Feedback	Volts	1-12	1
OF1628	99	UI-26	FH-5 Alarm	DC	1-12	1
OF1628	99	UI-27	FH-5 Sash Position	Volts	1-12	1
OF1628	99	UI-28	FH-5 Sash Override	DC	1-12	1
OF1628	99	UO-01	AVT-1 Airflow Setpoint	Volts	1-12	1
OF1628	99	UO-02	AVT-2 Airflow Setpoint	Volts	1-12	1
OF1628	99	UO-03	AVT-3 Airflow Setpoint	Volts	1-12	1
OF1628	99	UO-04	AVT-4 Airflow Setpoint	Volts	1-12	1
OF1628	99	UO-05	AVC-1 Airflow Setpoint	Volts	1-12	1
OF1628	99	UO-06	AVC-2 Airflow Setpoint	Volts	1-12	1
OF1628	99	UO-07	AVC-3 Airflow Setpoint	Volts	1-12	1
OF1628	99	UO-08	AVC-4 Airflow Setpoint	Volts	1-12	1
OF1628	99	UO-09	AVC-5 Airflow Setpoint	Volts	1-12	1
OF1628	99	UO-10	AVC-6 Airflow Setpoint	Volts	1-12	1
OF1628	99	UO-11	AVC-7 Airflow Setpoint	Volts	1-12	1
OF1628	99	UO-12	AVC-8 Airflow Setpoint	Volts	1-12	1

PACIFIC WEST CONTROLS, INC.
7230 W Pershing Ct
Visalia, CA 93291
PROJECT: COS - New University Center, 915 S Mooney Blvd, Visalia, CA 93277
FILENAME: COS - New University Center
DRAWING NAME: Chemistry Lab Points List
CONTRACT NO: SE:DAR DE: ANB PR: DAR
DRAWING NO.: 1.13

IDENTIFICATION STAMP
DIV. OF THE STATE ARCHITECT
APP: 02-122821 INC: 2
REVIEWED FOR
SS ☑ FLS ☑ ACS ☑
DATE: 11/20/2025

Teter, Inc. expressly reserves its common law copyright and other property rights in these plans. This document, the ideas and designs incorporated herein, as an instrument of professional service, is not to be used in whole or in part, for any other project without prior written authorization.

MARK	DATE	DESCRIPTION
A.	11/13/2025	DSA BACKCHECK

DSA APPROVED
Mary Lerch

TETER, INC.
FRESNO HEADQUARTERS
VISALIA | BAKERSFIELD | MODESTO | SAN LUIS OBISPO
ARCHITECTS ENGINEERS CONNECTED

VISALIA CAMPUS UNIVERSITY CENTER
COLLEGE OF THE SEQUOIAS
915 S. MOONEY BLVD
VISALIA, CALIFORNIA

DRAWING TITLE
MECHANICAL CONTROLS

PROJECT NO.
22-12498

DRAWING
M404.2

PLOT DATE: 11/10/2025 4:33:34 PM

\\tet-file1\Users\zachary.davis_TETR\Documents\12498-M-UC_zachary.davis8WYRV.rvt

CONTROLS DETAILS

Split System Diagram

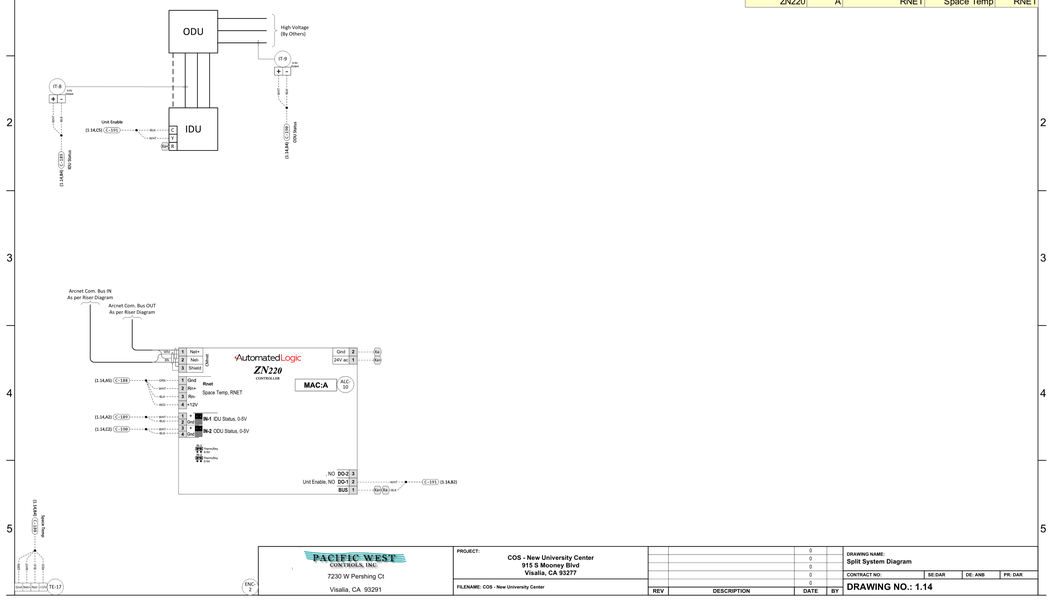

Points List - Active				
Controller	MAC	Point Number	Point Name	Range
ZN220	A	DO-01	Unit Enable	NO
ZN220	A	IN-01	IDU Status	0-5V
ZN220	A	IN-02	ODU Status	0-5V
ZN220	A	RNET	Space Temp	RNET

PACIFIC WEST CONTROLS, INC.
7230 W Pershing Ct
Visalia, CA 93291

PROJECT: COS - New University Center, 915 S Mooney Blvd, Visalia, CA 93277
FILENAME: COS - New University Center
DRAWING NAME: Split System Diagram
CONTRACT NO. | SE:DAR | DE: ANB | PR: DAR
DRAWING NO.: 1.14

REV	DESCRIPTION	DATE	BY
0			

Exhaust Fan Diagram

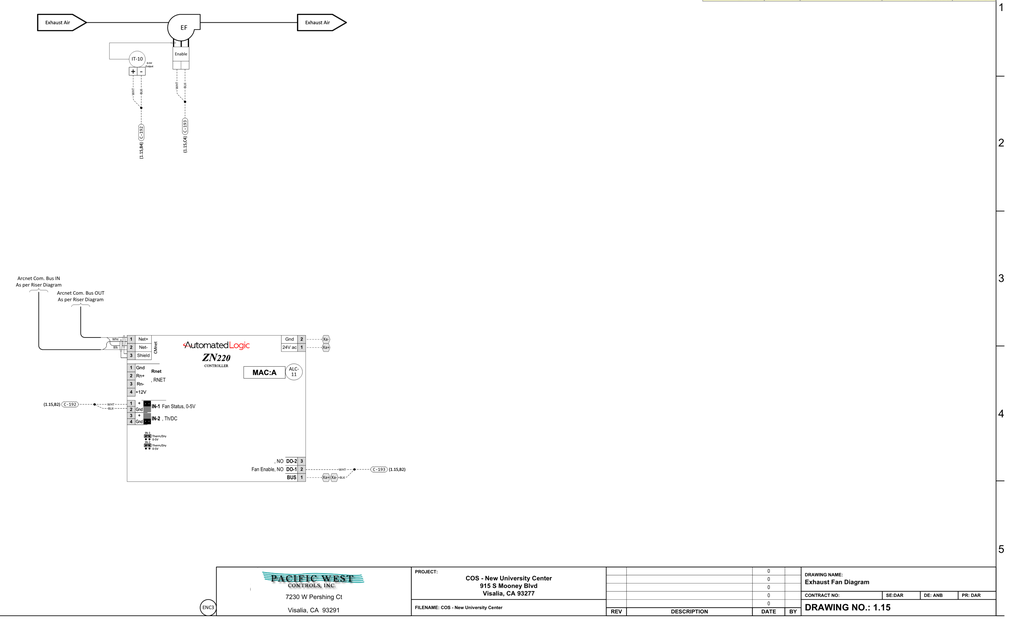

Points List - Active				
Controller	MAC	Point Number	Point Name	Range
ZN220	A	DO-01	Fan Enable	NO
ZN220	A	IN-01	Fan Status	0-5V

PACIFIC WEST CONTROLS, INC.
7230 W Pershing Ct
Visalia, CA 93291

PROJECT: COS - New University Center, 915 S Mooney Blvd, Visalia, CA 93277
FILENAME: COS - New University Center
DRAWING NAME: Exhaust Fan Diagram
CONTRACT NO. | SE:DAR | DE: ANB | PR: DAR
DRAWING NO.: 1.15

REV	DESCRIPTION	DATE	BY
0			

Lab Exhaust Fan

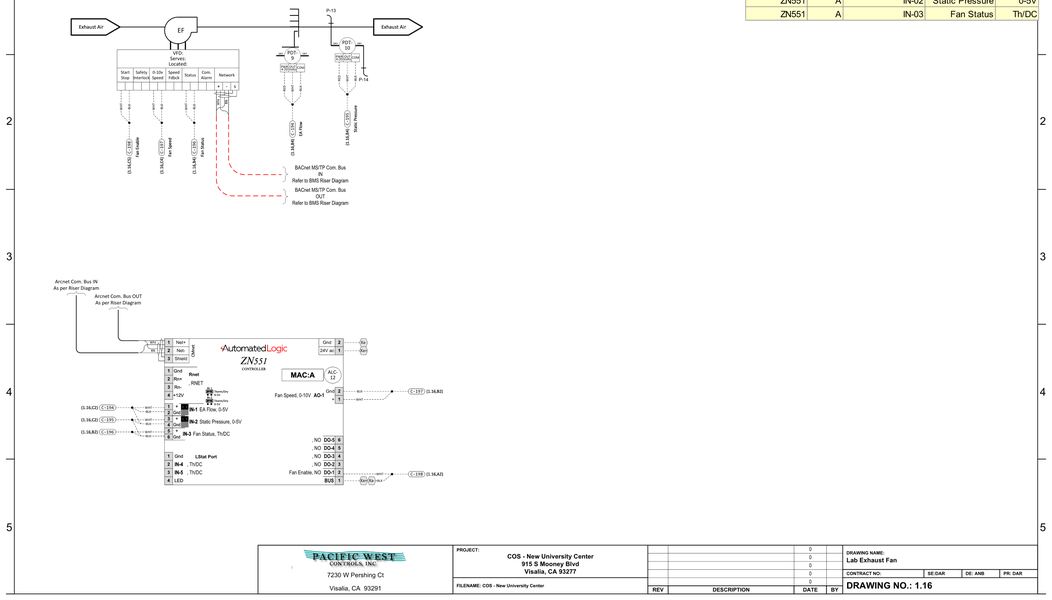

Points List - Active				
Controller	MAC	Point Number	Point Name	Range
ZN551	A	AO-01	Fan Speed	0-10V
ZN551	A	DO-01	Fan Enable	NO
ZN551	A	IN-01	EA Flow	0-5V
ZN551	A	IN-02	Static Pressure	0-5V
ZN551	A	IN-03	Fan Status	Th/DC

PACIFIC WEST CONTROLS, INC.
7230 W Pershing Ct
Visalia, CA 93291

PROJECT: COS - New University Center, 915 S Mooney Blvd, Visalia, CA 93277
FILENAME: COS - New University Center
DRAWING NAME: Lab Exhaust Fan
CONTRACT NO. | SE:DAR | DE: ANB | PR: DAR
DRAWING NO.: 1.16

REV	DESCRIPTION	DATE	BY
0			

DETAILS.1

CURRENT TRANSMITTER

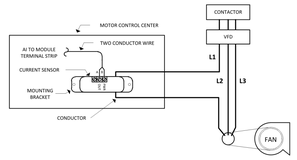

MOUNTING INSTRUCTIONS - CURRENT SENSOR

1. **ENSURE POWER CONDUCTOR TO BE MONITORED IS DISCONNECTED AND LOCKED OUT FROM THE POWER SOURCE.**
2. INSTALL THE ADJUSTABLE MOUNTING BRACKET TO THE BACK OR FLOOR OF THE MOTOR CONTROL CENTER. THE SENSOR MAY BE LOCATED AT ANY POINT ON THE CONDUCTOR BETWEEN THE MOTOR AND THE MOTOR STARTER.
3. POSITION THE SENSOR BODY SUCH THAT THE HOLE IS ALIGNED TO PERMIT THE CONDUCTOR TO FIT THROUGH THE HOLE. GUIDE THE CONDUCTOR THROUGH THE CENTER HOLE IN THE SENSOR AND CONNECT THE CONDUCTOR TO THE LUGS OF THE MOTOR STARTER.
4. WIRE THE SENSOR AS SHOWN ABOVE.

NOTE: IF YOU DESIRE A 1-5VDC OUTPUT SIGNAL INSTEAD OF A 4-20mA, WIRE A 250 OHM RESISTOR IN PARALLEL BETWEEN THE SENSOR OUTPUT AND GROUND.

IDEC GENERAL PURPOSE RELAYS

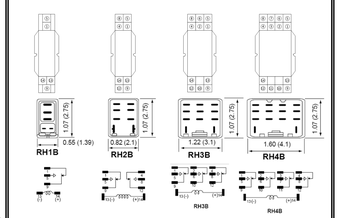

PANEL MOUNTING INSTRUCTIONS
SNAP THE RELAY BASE ONTO THE DIN RAIL IN THE DESIRED LOCATION. PART NUMBER FOR 35 mm DIN RAIL: DIN-3F OR DIN-4F (3 OR 4 FOOT LENGTHS RESPECTIVELY)

SURFACE MOUNTING INSTRUCTIONS
FASTEN THE RELAY BASE TO THE DESIRED LOCATION USING THE (2) SCREW HOLES IN THE RELAY BASE.

LIQUID DIFFERENTIAL PRESSURE TRANSMITTER WITH BY PASS VALVE ASSEMBLY

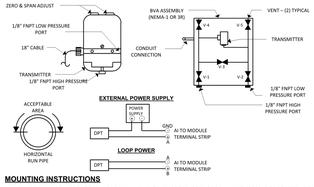

MOUNTING INSTRUCTIONS

MOUNTING SHOULD BE IN THE VERTICAL POSITION WITH THE HIGH PRESSURE PORT DOWN. THE PRESSURE PORT REQUIRES A SUITABLE THREAD SEALANT. THE INSTRUMENT SHOULD BE MOUNTED IN A LOCATION CLOSE AND RIGID TO MINIMIZE TUBE FILL IN THE CONNECTIONS BETWEEN INSTRUMENT AND PROCESS. GOOD GAUGE LINE PRACTICES SHOULD BE OBSERVED. PRESSURE CONNECTIONS SHOULD BE MADE IN ACCORDANCE WITH APPROVED INDUSTRIAL PRACTICES. STRESS RELIEF OR EXPANSION LOOPS IN THE PRESSURE LINES ARE RECOMMENDED TO ELIMINATE TRANSMISSION OF STRAIN AND VIBRATION TO THE TRANSMITTER. PURGING AND CLEANING OF THE PRESSURE LINES BEFORE MOUNTING IS RECOMMENDED. INSTALL ISOLATION VALVE FOR IMPULSE TUBES AT TAP.

BYPASS VALVE ASSEMBLY

A BVA-S BYPASS VALVE ASSEMBLY IS FOR USE ON SYSTEMS WITH A MAXIMUM PRESSURE OF 150psig AT 150 DEGREES F.

TO PLACE TRANSMITTER IN SERVICE: (1)OPEN V-4 & V-5, (2) SLOWLY OPEN V-1 & V-2, (4) CLOSE V-4 & V-5, (5) OPEN V-1 & V-2 FULLY, (6) CLOSE V-3. YOU ARE NOW READING DIFFERENTIAL PRESSURE.

TO TAKE OUT OF SERVICE: (1) OPEN V-3, (2) OPEN V-1 & V-2, (3) OPEN V-4 & V-5 TO RELEASE PRESSURE.

NOTE:
INSTALL FLEXIBLE CONDUIT FOR ALL CABLE OR WIRE BROUGHT TO END DEVICE FROM JUNCTION BOX. FLEXIBLE CONDUIT SHOULD NOT EXCEED 18 INCHES.

DIFFERENTIAL PRESSURE TRANSMITTER DUCT MOUNTED

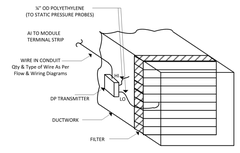

MOUNTING INSTRUCTIONS

1. DRILL A 3/8" HOLE IN THE DUCT WALL FOR THE STATIC PRESSURE PROBES.
2. SECURE THE DEVICE TO THE DUCT USING SELF-TAPPING SHEET METAL SCREWS.
3. INSTALL STATIC PRESSURE PROBE HORIZONTALLY SO THE ENCLOSURE IS IN A VERTICAL PLANE AND THE NAMEPLATE AND LETTING IS IN AN UPRIGHT POSITION.
4. CONNECT TRANSMITTER TO CONTROL SYSTEM.
5. CONFIGURE ALL JUMPERS AND SWITCHES TO APPROPRIATE POSITIONS.

NOTE:
INSTALL FLEXIBLE CONDUIT FOR ALL CABLE OR WIRE BROUGHT TO END DEVICE FROM JUNCTION BOX. FLEXIBLE CONDUIT SHOULD NOT EXCEED 18 INCHES.

DIFFERENTIAL PRESSURE TRANSMITTER - DUCT STATIC PRESSURE

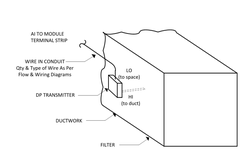

MOUNTING INSTRUCTIONS

1. DRILL A 3/8" HOLE IN THE DUCT WALL FOR THE STATIC PRESSURE PROBES.
2. SECURE THE DEVICE TO THE DUCT USING SELF-TAPPING SHEET METAL SCREWS.
3. INSTALL STATIC PRESSURE PROBE HORIZONTALLY SO THE ENCLOSURE IS IN A VERTICAL PLANE AND THE NAMEPLATE AND LETTING IS IN AN UPRIGHT POSITION.
4. CONNECT TRANSMITTER TO CONTROL SYSTEM.
5. CONFIGURE ALL JUMPERS AND SWITCHES TO APPROPRIATE POSITIONS.

NOTE:
INSTALL FLEXIBLE CONDUIT FOR ALL CABLE OR WIRE BROUGHT TO END DEVICE FROM JUNCTION BOX. FLEXIBLE CONDUIT SHOULD NOT EXCEED 18 INCHES.

IDENTIFICATION STAMP
DIV. OF THE STATE ARCHITECT
APP: 02-122821 INC: 2
REVIEWED FOR
SS ☑ FLS ☑ ACS ☑
DATE: 11/20/2025

Teter, Inc. expressly reserves its common law copyright and other property rights in these plans. This document, the ideas and designs incorporated herein, as an instrument of professional service, is not to be used in whole or in part, for any other project without prior written authorization.

MARK	DATE	DESCRIPTION
A	11/13/2025	DSA BACKCHECK

TETER, INC.
FRESNO HEADQUARTERS
VISALIA | BAKERSFIELD | MODESTO | SAN LUIS OBISPO
ARCHITECTS ENGINEERS CONNECTED

VISALIA CAMPUS UNIVERSITY CENTER
COLLEGE OF THE SEQUOIAS
915 S. MOONEY BLVD
VISALIA, CALIFORNIA

DRAWING TITLE
MECHANICAL CONTROLS

PROJECT NO.
22-12498

DRAWING
M405.2

PLOT DATE: 11/10/2025 4:33:35 PM

\\tet-file1\Users\zachary.davis_TETR\Documents\12498-M-UC_zachary.davis8WYRV.rvt

IDENTIFICATION STAMP
DIV. OF THE STATE ARCHITECT
APP: 02-122821 INC: 2
REVIEWED FOR
SS ☑ FLS ☑ ACS ☑
DATE: 11/20/2025

Teter, Inc. expressly reserves its common law copyright and other property rights in these plans. This document, the ideas and designs incorporated herein, as an instrument of professional service, is not to be used in whole or part, for any other project without prior written authorization.

MARK	DATE	DESCRIPTION
A.	11/13/2025	DSA BACKCHECK

TETER, INC.
ARCHITECTS ENGINEERS CONNECTED
FRESNO HEADQUARTERS
VISALIA | BAKERSFIELD | MODESTO | SAN LUIS OBISPO

VISALIA CAMPUS UNIVERSITY CENTER
COLLEGE OF THE SEQUOIAS
915 S. MOONEY BLVD
VISALIA, CALIFORNIA

DRAWING TITLE
MECHANICAL CONTROLS FLOOR PLAN - FIRST FLOOR

PROJECT NO.
22-12498

DRAWING
M410.2



MECHANICAL CONTROLS FLOOR PLAN - FIRST FLOOR | 1/8"=1'-0" | 1

GENERAL NOTES

A. MOUNT THERMOSTATS ON WALL AT +48" AFF TO TOP OF BOX. (TYP.)
B. WALL LINETYPE DESIGNATES FIRE RATED CONSTRUCTION. REFER TO ARCHITECTURAL DRAWINGS.

KEYNOTES

1 CONCEALED 4 PIPE FAN COIL WITH CHILLED WATER AND HOT WATER CONTROL VALVES.
2 FLOOR MOUNTED AIR HANDLER W/ VFD SUPPLY FAN, CHILLED WATER AND HOT WATER CONTROL VALVES.
3 DUCTLESS WALL MOUNTED FAN COIL.
4 DUCT SMOKE DETECTOR IN SUPPLY DUCT. WIRE TO UNIT FOR SHUTDOWN UPON DETECTION OF SMOKE.
5 EMS SUPERVISORY CONTROL PANEL.
6 PROVIDE LEAK DETECTOR IN DRAIN PAN ABOVE FIRST FLOOR CEILING. INTEGRATE LEAK DETECTOR INTO EMS SYSTEM.
7 COMBINATION FIRE/SMOKE DAMPER W/ DUCT SMOKE DETECTOR. WIRE TO FC/AH FOR UNIT SHUTDOWN UPON DETECTION OF SMOKE OR DAMPER CLOSURE.
8 CHW BYPASS VALVE AND SYSTEM DP SENSOR.
9 HW BYPASS VALVE AND SYSTEM DP SENSOR.
A CONCEALED 4 PIPE FAN COIL WITH CHILLED WATER AND HOT WATER CONTROL VALVES.
B CONCEALED 4 PIPE FAN COIL WITH CHILLED WATER AND HOT WATER CONTROL VALVES.

PLOT DATE: 11/10/2025 4:33:49 PM



MECHANICAL CONTROLS FLOOR PLAN - SECOND FLOOR

1/8"=1'-0" | 1

GENERAL NOTES

A. MOUNT THERMOSTATS ON WALL AT +48" AFF TO TOP OF BOX. (TYP.)
B. WALL LINETYPE DESIGNATES FIRE RATED CONSTRUCTION. REFER TO ARCHITECTURAL DRAWINGS.

KEYNOTES

1 CONCEALED 4-PIPE FAN COIL W// CHILLED WATER AND HOT WATER CONTROL VALVES.
2 DUCTLESS WALL MOUNTED FAN COIL.
3 DUCT SMOKE DETECTOR IN SUPPLY DUCT. WIRE TO UNIT FOR SHUT DOWN UPON DETECTION OF SMOKE.
4 LAB FUME HOOD EXHAUST VENTURI VALVE.
5 LAB GENERAL EXHAUST VENTURI VALVE.
6 LAB SUPPLY AIR VENTURI VALVE.
7 VFD'S FOR LAB HOOD EXHAUST FANS EF-1, EF-2, EF-3.
8 EMS CONTROLS CABINET, 30"x30".
9 AH-1 RA & OSA ECONOMIZER DAMPERS.
10 PROVIDE AND INSTALL SASH SENSOR (ACCUTROL VSS-50) AND AIR VELOCITY ALARM (ACCUTROL APEX) IN EACH FUME HOOD.
A CONCEALED 4-PIPE FAN COIL W// CHILLED WATER AND HOT WATER CONTROL VALVES.
B CONCEALED 4-PIPE FAN COIL W// CHILLED WATER AND HOT WATER CONTROL VALVES.

IDENTIFICATION STAMP
DIV. OF THE STATE ARCHITECT
APP: 02-122821 INC: 2
REVIEWED FOR
SS ☑ FLS ☑ ACS ☑
DATE: 11/20/2025

Teter, Inc. expressly reserves its common law copyright and other property rights in these plans. This document, the ideas and designs incorporated herein, as an instrument of professional service, is not to be used in whole or in part, for any other project without prior written authorization.

MARK	DATE	DESCRIPTION
A	11/13/2025	DSA BACKCHECK

TETER, INC.
FRESNO HEADQUARTERS
VISALIA | BAKERSFIELD | MODESTO | SAN LUIS OBISPO
ARCHITECTS ENGINEERS CONNECTED

VISALIA CAMPUS UNIVERSITY CENTER
COLLEGE OF THE SEQUIOAS
915 S. MOONEY BLVD
VISALIA, CALIFORNIA

DRAWING TITLE
MECHANICAL CONTROLS FLOOR PLAN - SECOND FLOOR

PROJECT NO.
22-12498

DRAWING
M420.2

PLOT DATE: 11/10/2025 4:34:03 PM

\\tetr-file1\Users\zachary.davis_TETR\Documents\12498-M-UC_zachary.davis8WYRV.rvt

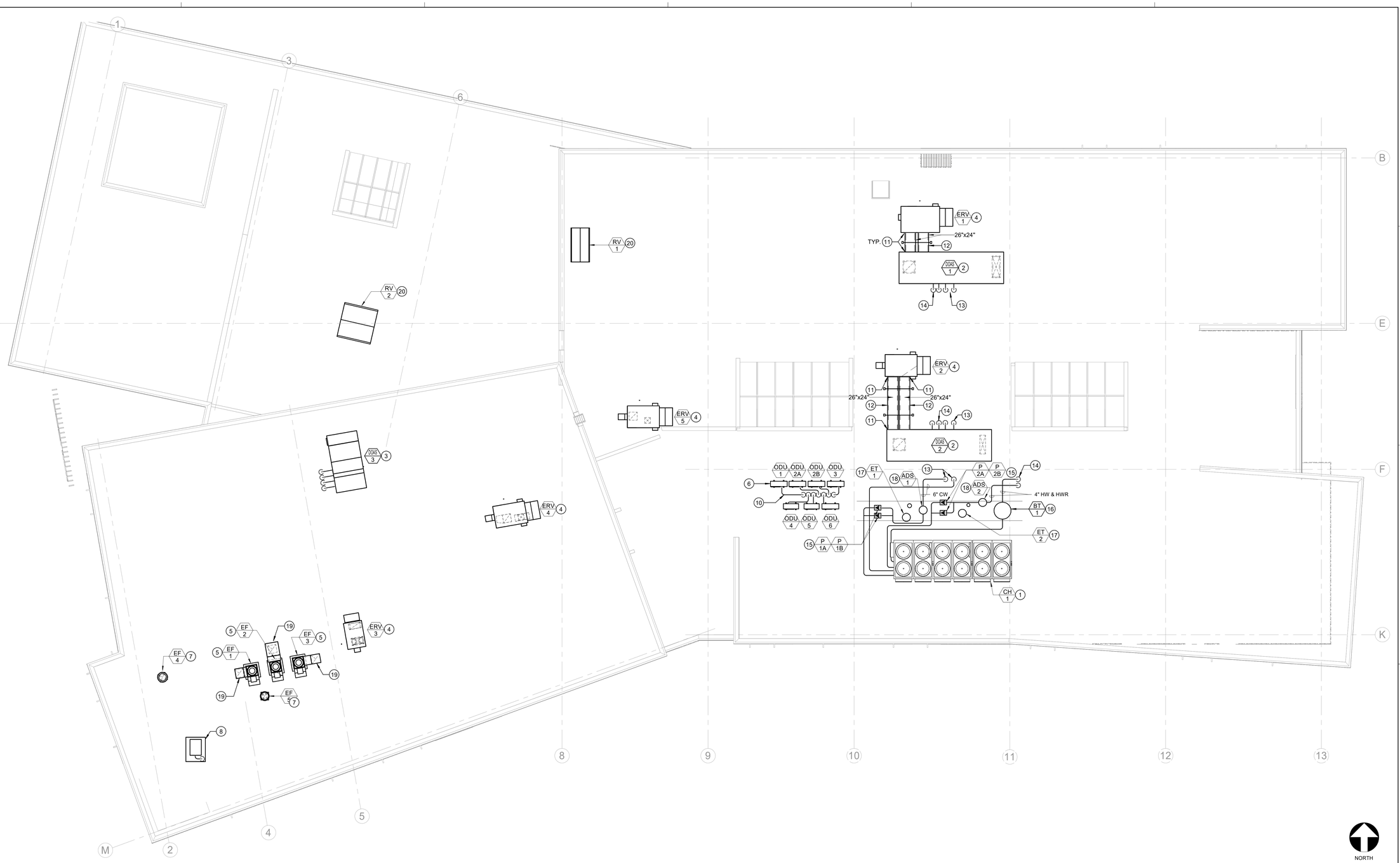

MECHANICAL ROOF PLAN — 1/8" = 1'-0" — 1

GENERAL NOTES

A. REFER TO DETAIL 8/M801.2 FOR CHILLED WATER/HOT WATER PIPING DIAGRAM.
B. REFER TO DETAIL 23/M800.2 FOR TYPICAL PIPE SUPPORTS.
C. PROVIDE CURB ACOUSTIC INSULATION FOR ALL DOAS AND ERV UNITS. SEE 22/M800.2 FOR DETAIL.

KEYNOTES

1 MODULAR HEAT PUMP CHILLER MOUNTED ON STEEL RAILS. SEE 11/M800.2 FOR ANCHORAGE.
2 DOAS AIR HANDLER ON VIBRATION ISOLATION CURB. SEE 5/M801.2 FOR DETAIL.
3 DOAS-3 AIR HANDLER ON VIBRATION ISOLATION CURB. SEE 15/M801.2 FOR DETAIL.
4 ENERGY RECOVERY VENTILATOR ON VIBRATION ISOLATION CURB. SEE 2 & 4/M803.2 FOR ANCHORAGE.
5 HIGH PLUME LAB EXHAUST FAN ON ROOF CURB. SEE 12/M800.2 FOR DETAIL.
6 OUTDOOR CONDENSING UNITS ON STEEL RAIL SUPPORTS. SEE 13/M800.2 FOR ANCHORAGE. ORIENT UNITS W/ FAN DISCHARGE AWAY FROM OTHER UNITS.
7 UPBLAST EXHAUST FAN ON ROOF CURB. SEE 4/M802.2 FOR ANCHORAGE.
8 COLD BOX CONDENSING UNIT ON PLATFORM. SEE 8/M802.2 FOR ANCHORAGE.
9 REFRIGERANT PIPING PENETRATION THRU PLATFORM. SEE 10/M800.2 FOR PIPE SHROUD.
10 MULTIPLE REFRIGERANT PIPE PENETRATIONS THRU ROOF. SEE 26/M800.2 FOR PIPE VESTIBULE.
11 DUCT FLEX CONNECTION W/ WEATHER SHIELD. SEE 1/M801.2 FOR DETAIL.
12 DUCTWORK ON ROOF. SEE 6/M802.2 FOR SUPPORT.
13 CHWS/R PIPING DOWN THRU ROOF. SEE 28/M800.2 FOR ROOF PENETRATION.
14 HWS/R PIPING DOWN THRU ROOF. SEE 28/M800.2 FOR ROOF PENETRATION.
15 INLINE PUMPS. SEE 20/M800.2 FOR DETAIL.
16 BUFFER TANK ON STEEL RAIL SUPPORT. SEE 30/M800.2 FOR DETAIL.
17 EXPANSION TANK ON STEEL RAIL SUPPORT. SEE 24/M800.2 FOR DETAIL.
18 INLINE AIR AND DIRT SEPERATOR. SEE 25/M800.2 FOR DETAIL.
19 DUCT THRU ROOF. SEE 3/M802.2 FOR DETAIL.
20 CURB MOUNTED ROOF VENT. SEE SIMILAR DETAIL 4/M802.2 FOR ANCHORAGE.

A MODULAR HEAT PUMP CHILLER MOUNTED ON STEEL RAILS. SEE 11/M800.2 FOR ANCHORAGE.
B MODULAR HEAT PUMP CHILLER MOUNTED ON STEEL RAILS. SEE 11/M800.2 FOR ANCHORAGE.

IDENTIFICATION STAMP
DIV. OF THE STATE ARCHITECT
APP: 02-122821 INC: 2
REVIEWED FOR
SS ☑ FLS ☑ ACS ☑
DATE: 11/20/2025

Teter, Inc. expressly reserves its common law copyright and other property rights in these plans. This document, the ideas and designs incorporated herein, as an instrument of professional service, is not to be used in whole or part, for any other project without prior written authorization.

MARK	DATE	DESCRIPTION
A.	11/13/2025	DSA BACKCHECK

TETER, INC.
FRESNO HEADQUARTERS
VISALIA | BAKERSFIELD | MODESTO | SAN LUIS OBISPO
ARCHITECTS ENGINEERS CONNECTED

VISALIA CAMPUS UNIVERSITY CENTER
COLLEGE OF THE SEQUOIAS
915 S. MOONEY BLVD
VISALIA, CALIFORNIA

DRAWING TITLE
MECHANICAL ROOF PLAN

PROJECT NO.
22-12498

DRAWING
M500.2

PLOT DATE: 11/10/2025 4:34:11 PM

\\tet-file1\Users\zachary.davis_TETR\Documents\12498-M-UC_zachary.davis8WYRV.rvt

\\tet-file1\Users\zachary.davis_TETR\Documents\12498-M-UC_zachary.davisBWYRV.rvt

NOTE: SIZE VESTIBULE AND OPENING FOR ALL VRF ODU PIPING. (2 PER MODULE, 8 PIPES TOTAL)

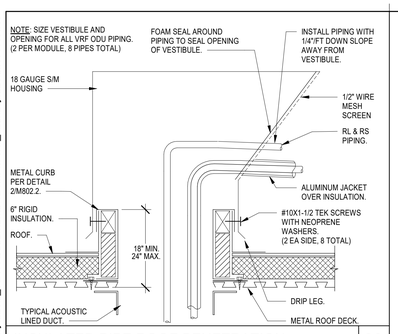

INSULATED PIPE ROOF PENETRATION N.T.S. 26

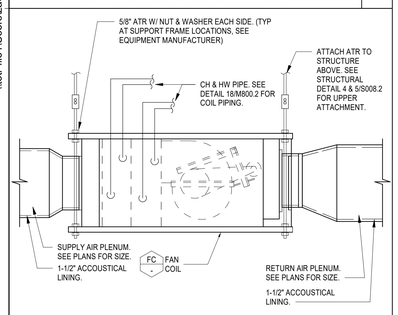

FAN COIL (SUSPENDED) N.T.S. 27

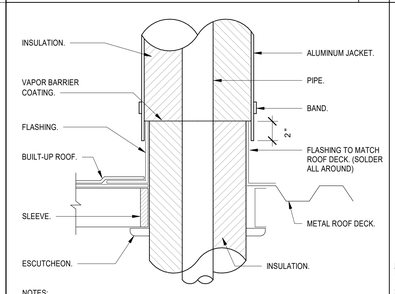

NOTES:
1. SEE FOR PLAN FOR PIPE SIZE.

INSULATED PIPE THROUGH ROOF N.T.S. 28

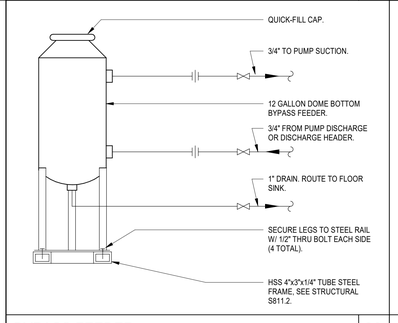

BYPASS FEEDER N.T.S. 29

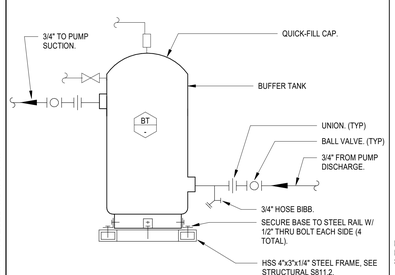

BUFFER TANK N.T.S. 30

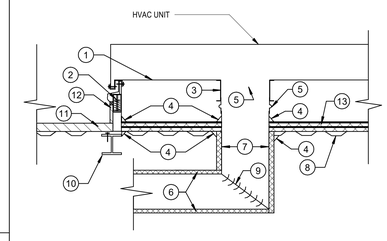

BY RTU UNIT MANUFACTURER
1. RTU BASE.
2. HUSH CURB TM HIC/HIR/HPC VIBRATION ROOF CURB.
3. INTEGRAL CURB DUCT SUPPORT.
4. HUSH SEALANT TM ACOUSTICAL GRADE CAULK AT DUCT DROPS & CURB PERIMETER.
5. RTU OPENINGS.
6. HUSH WRAP TM ACOUSTICAL COMPOSITE LAGGING.

BY HVAC CONTRACTOR
7. DUCT WORK.
8. ROOF DECK FLASHED TO WITHIN 1/4" OF ALL DUCT DROPS BUT NOT IN CONTACT WITH DUCT WALL.
9. TURNING VANE.

BY GENERAL CONTRACTOR
10. BUILDING STEEL.
11. BUILT-UP ROOF OR CONCRETE.
12. INSULATION AND CANT STRIP.

BY ACOUSTICAL MANUFACTURER
13. HUSHCORE™ DECK™ SYSTEM, MODEL DS-52 IN CURB ACOUSTICAL TREATMENT.

NOTE: SEE SCHEDULES ON M002 FOR ADDITIONAL INFORMATION, INCLUDING CURB HEIGHT & WEIGHT.

ACOUSTIC ATTENUATION DETAIL N.T.S. 22

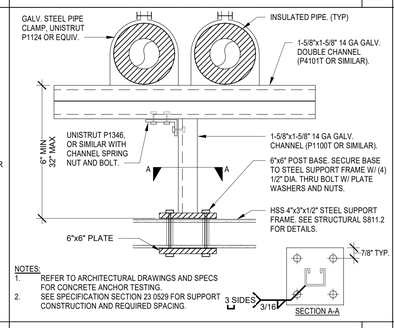

NOTES:
1. REFER TO ARCHITECTURAL DRAWINGS AND SPECS FOR CONCRETE ANCHOR TESTING.
2. SEE SPECIFICATION SECTION 23 0529 FOR SUPPORT CONSTRUCTION AND REQUIRED SPACING.

PIPE SUPPORT DETAIL N.T.S. 23

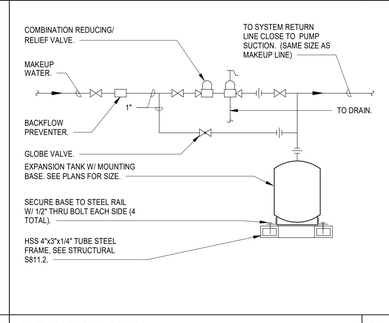

EXPANSION TANK N.T.S. 24

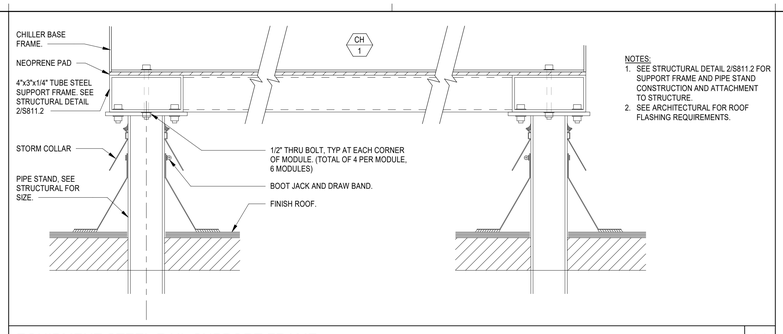

NOTES:
1. SEE STRUCTURAL DETAIL 2/S811.2 FOR SUPPORT FRAME AND PIPE STAND CONSTRUCTION AND ATTACHMENT TO STRUCTURE.
2. SEE ARCHITECTURAL FOR ROOF FLASHING REQUIREMENTS.

EQUIPMENT STEEL RAIL SUPPORT FRAME N.T.S. 11

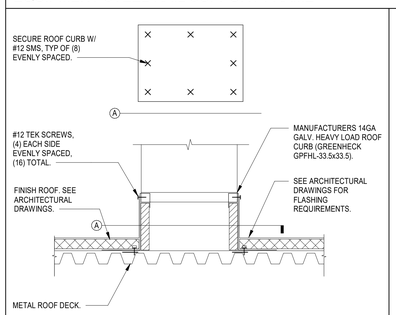

SINGLE PIPE HANGER DETAIL N.T.S. 19

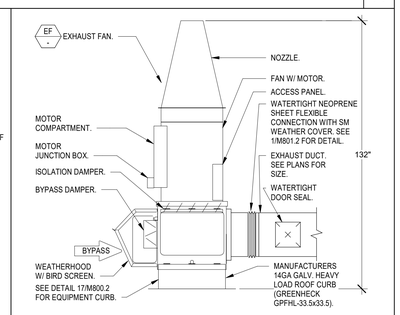

LAB EXHAUST FAN DETAIL N.T.S. 12

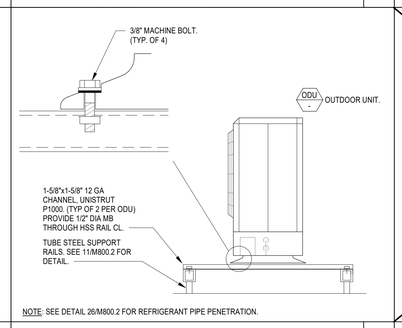

NOTES
1. SEE PLANS FOR PIPE SIZES.

2-WAY COIL DETAIL N.T.S. 18

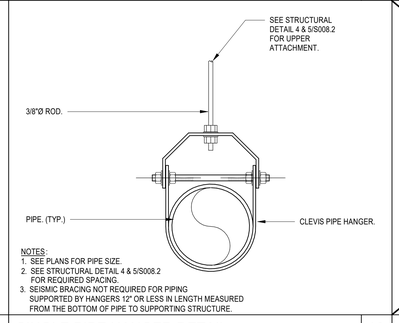

NOTES:
1. SEE PLANS FOR PIPE SIZE.
2. SEE STRUCTURAL DETAIL 4 & 5/S008.2 FOR REQUIRED SPACING.
3. SEISMIC BRACING NOT REQUIRED FOR PIPING SUPPORTED BY HANGERS 12" OR LESS IN LENGTH MEASURED FROM THE BOTTOM OF PIPE TO SUPPORTING STRUCTURE.

14

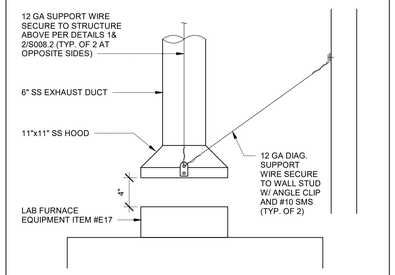

NOTE: SEE PLAN FOR PIPE SIZES.

INLINE PUMP N.T.S. 20

E17 FURNACE HOOD SUPPORT N.T.S. 15

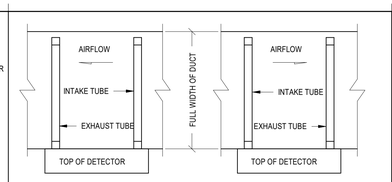

SAMPLING TUBE ORIENTATION

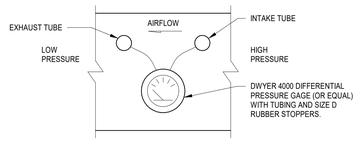

AIR SAMPLING VERIFICATION

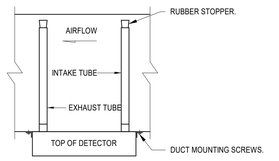

DETECTOR MOUNTING

NOTES:
1. MOUNT DUCT DETECTOR IN SA DUCT UPSTREAM OF BRANCH TAKE-OFFS.
2. UPON DETECTION OF SMOKE UNITS SHALL BE SHUT-DOWN AUTOMATICALLY.
3. PROVIDE INTERLOCKS TO SHUT DOWN UNIT AS REQUIRED.
4. PROVIDE INTERLOCKS TO ACTIVATE ALARM SYSTEM PER CMC 608.

DUCT DETECTOR N.T.S. 7

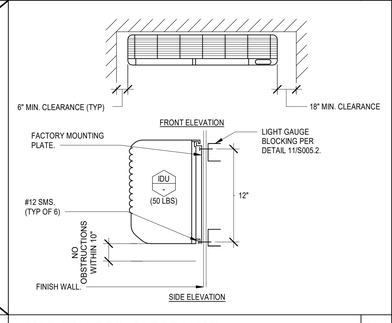

WALL FAN COIL CLEARANCE N.T.S. 9

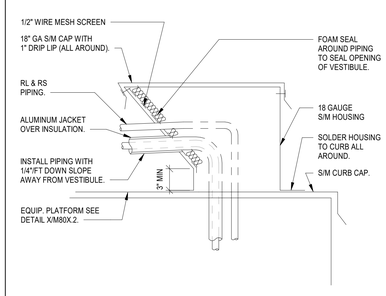

REFRIG. PIPE VESTIBULE ON PLATFORM N.T.S. 10

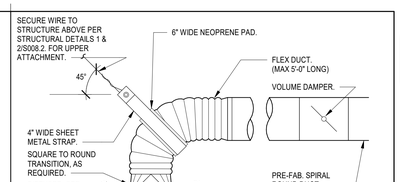

NOTES:
1. RETURN AND EXHAUST AIR REGISTERS SIMILAR.
2. INSTALL VOLUME DAMPER ON BRANCH DUCT AS CLOSE TO DUCT MAIN AS POSSIBLE.

CEILING REGISTER N.T.S. 1

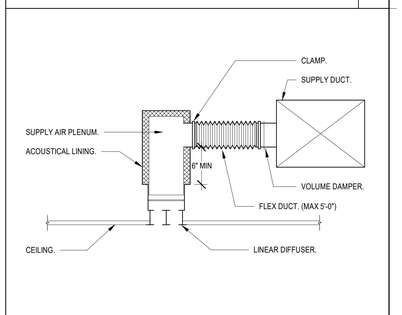

LINEAR DIFFUSER DETAIL N.T.S. 2

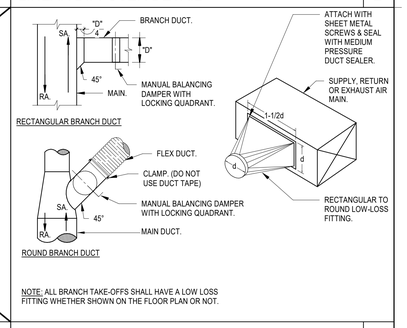

NOTE: ALL BRANCH TAKE-OFFS SHALL HAVE A LOW LOSS FITTING WHETHER SHOWN ON THE FLOOR PLAN OR NOT.

TYPICAL BRANCH DUCT DETAILS N.T.S. 3

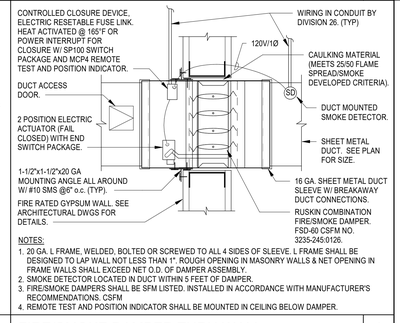

NOTES:
1. 20 GA. L FRAME, WELDED, BOLTED OR SCREWED TO ALL 4 SIDES OF SLEEVE. L FRAME SHALL BE DESIGNED TO LAP WALL NOT LESS THAN 1". ROUGH OPENING IN MASONRY WALLS & NET OPENING IN FRAME WALLS SHALL EXCEED NET O.D. OF DAMPER ASSEMBLY.
2. SMOKE DETECTOR LOCATED IN DUCT WITHIN 5 FEET OF DAMPER.
3. FIRE/SMOKE DAMPERS SHALL BE SFM LISTED. INSTALLED IN ACCORDANCE WITH MANUFACTURER'S RECOMMENDATIONS, CSFM
4. REMOTE TEST AND POSITION INDICATOR SHALL BE MOUNTED IN CEILING BELOW DAMPER.

FIRE/SMOKE DAMPER THRU WALL N.T.S. 4

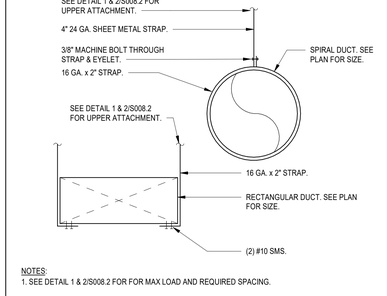

NOTES:
1. SEE DETAIL 1 & 2/S008.2 FOR FOR MAX LOAD AND REQUIRED SPACING.

DUCT SUPPORT DETAIL N.T.S. 5

IDENTIFICATION STAMP
DIV. OF THE STATE ARCHITECT
APP: 02-122821 INC: 2
REVIEWED FOR
SS ☑ FLS ☑ ACS ☑
DATE: 11/20/2025

Teter, Inc. expressly reserves its common law copyright and other property rights in these plans. This document, the ideas and designs incorporated herein, as an instrument of professional service, is not to be used in whole or in part, for any other project without prior written authorization.

MARK	DATE	DESCRIPTION
A.	11/13/2025	DSA BACKCHECK

TETER, INC.
FRESNO HEADQUARTERS
VISALIA | BAKERSFIELD | MODESTO | SAN LUIS OBISPO
ARCHITECTS ENGINEERS CONNECTED

VISALIA CAMPUS UNIVERSITY CENTER
COLLEGE OF THE SEQUOIAS
915 S. MOONEY BLVD
VISALIA, CALIFORNIA

DRAWING TITLE
MECHANICAL DETAILS

PROJECT NO.
22-12498

DRAWING
M800.2

PLOT DATE: 11/10/2025 4:34:14 PM

\\tet-file1\Users\zachary.davis_TETR\Documents\12498-MH-UC_zachary.davis8WYRV.rvt
PLOT DATE: 11/10/2025 4:34:16 PM

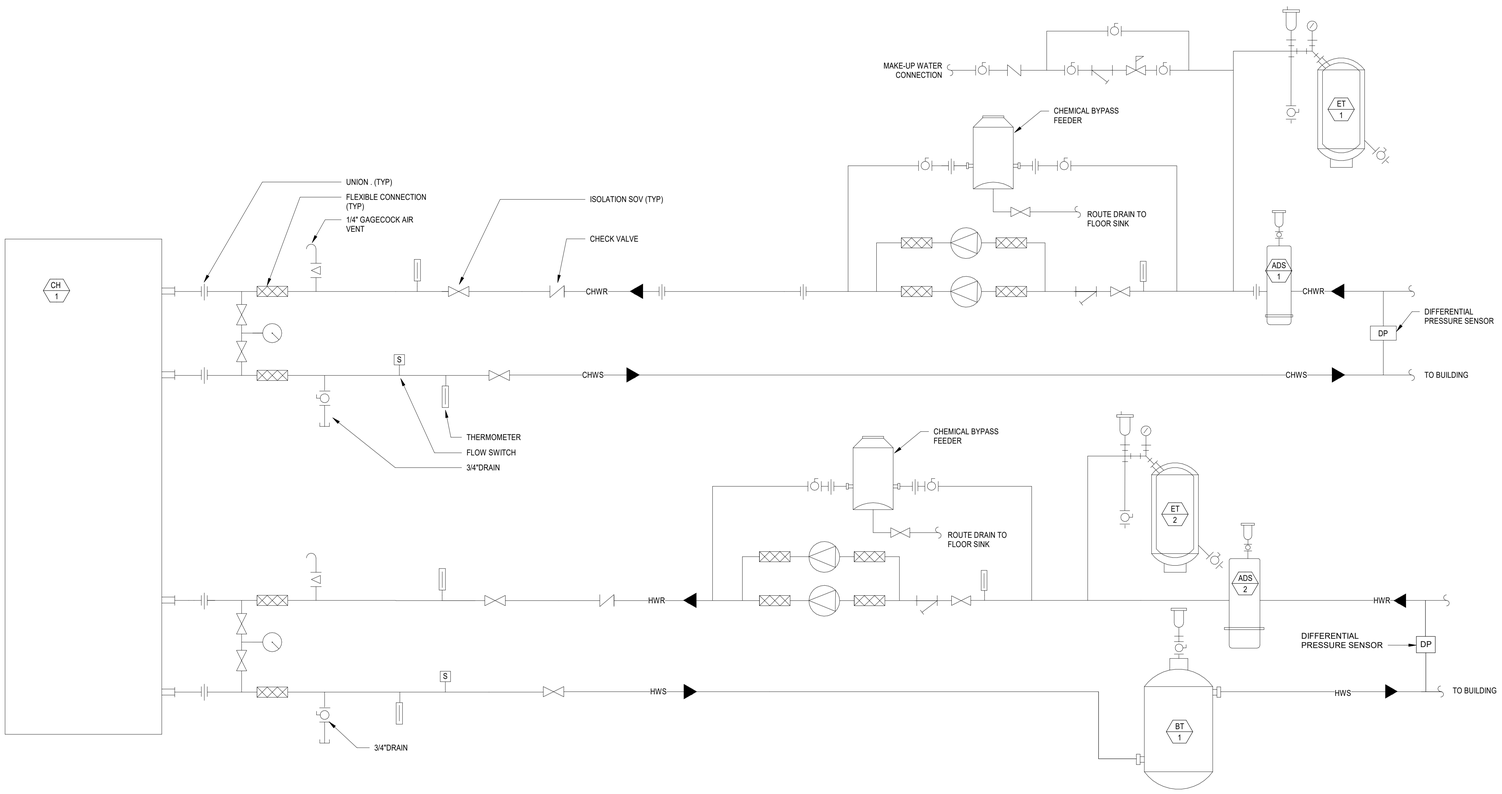

CHILLER PIPING DIAGRAM — N.T.S. 13

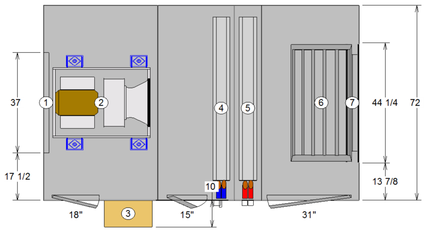

1 Opening front 19 x 37
2 Plenum fan - 20in. dd plenum, full width, M press Supply fan 7.5 hp 460/3
3 External VFD RH
4 Cooling coil - 4 Rows Coil type 3/8" Unit Optimized, High Water Flow(3U)
5 Heating coil - 2 Rows Coil type 1/2" Unit Optimized, General (UW)
6 Damper top-parallel blade 44.25 x 22.75
7 Damper back-parallel blade 22.75 x 44.25
8 1" N.P.T.E
9 Angled filters -

Doors
18 width x 35 height
15 width x 35 height
31 width x 35 height

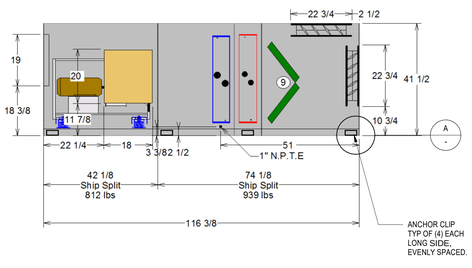

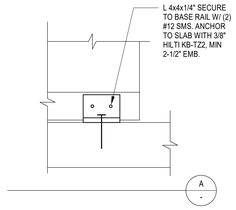

AIR HANDLER DETAIL - AH1 — N.T.S. 25

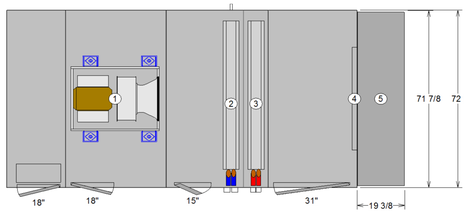

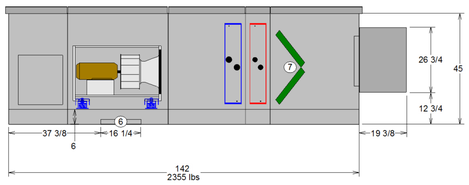

1 Plenum fan - 20in. dd plenum, 80% width, H press Supply fan 7.5 hp 460/3
2 Cooling coil - 4 Rows Coil type 1/2" Unit Optimized, High Water Flow(UU)
3 Heating coil - 2 Rows Coil type 1/2" Unit Optimized, General (UW)
4 Opening back 20.25 x 41.75
5 Hood back
6 Opening bottom 44 x 16.25
7 Angled filters -

Doors
18 width x 35 height
15 width x 35 height
31 width x 35 height

NOTES:
1. SEE DETAIL 2&4/M803.2 FOR DOAS-3 CURB ATTACHMENTS.

DOAS-3 DETAIL — N.T.S. 15

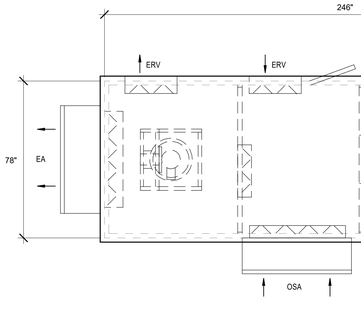

NOTES:
1. SEE DETAIL 2&4/M803.2 FOR DOAS-1 & 2 CURB ATTACHMENTS.

DOAS-1 & 2 DETAIL — N.T.S. 5

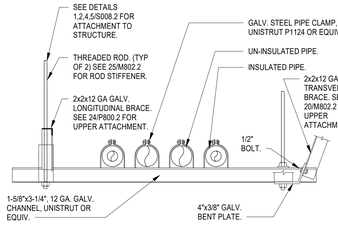

PIPE SIZE	ROD SIZE
≤ 4"	5/8"
4"	7/8"
≥ 4"	1"

NOTES:
1. SEE PLANS FOR PIPE SIZES.
2. SEE SPECIFICATIONS FOR REQUIRED SUPPORT SPACING.
3. SEISMIC BRACING NOT REQUIRED FOR PIPING SUPPORTED BY HANGERS 12" OR LESS IN LENGTH MEASURED FROM THE BOTTOM OF PIPE TO SUPPORTING STRUCTURE.
4. SEISMIC BRACING NOT REQUIRED FOR THE FOLLOWING:
   ≤ 2" VENT, GAS, OR EMPTY SCH 40 STEEL PIPE
   ≤ 1-1/2" SCH 40 STEEL PIPE
   ≤ 3" VENT, GAS, OR EMPTY COPPER PIPE
   ≤ 2" COPPER PIPE
   ≤ 3" CAST IRON VENT
   ≤ 2" CAST IRON SEWER OR RWL
   ALL PIPE ≤ 1"
   **ALL PIPES WITH HAZARDOUS CONTENTS (LAB GASES, NATURAL GAS) GREATER THAN 1" SHALL REQUIRE SEISMIC BRACING.
5. PROVIDE TRANSVERSE BRACES AT EACH END OF EACH STRAIGHT RUN OF PIPE AND AT MAX 27'-0" O.C. FOR STEEL & COPPER PIPE AND MAX 10'-0" FOR CAST IRON PIPE.
6. PROVIDE MIN ONE LONGITUDINAL BRACE PER STRAIGHT RUN OF PIPE. MAX SPACING FOR CAST IRON PIPE IS 19'-0" O.C.

PIPE TRAPEZE W/ SEISMIC BRACE — N.T.S. 7

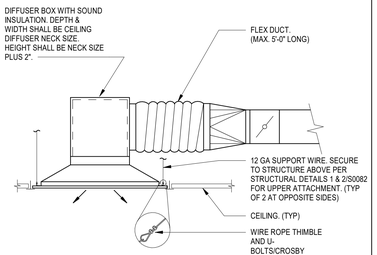

CEILING REGISTER — N.T.S. 8

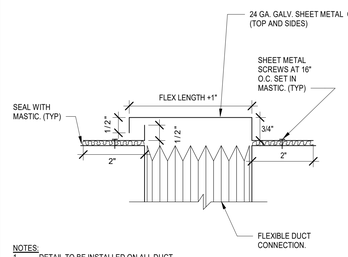

NOTES:
1. DETAIL TO BE INSTALLED ON ALL DUCT FLEXIBLE CONNECTIONS EXPOSED TO WEATHER.
2. SHEET METAL SHALL COMPLETELY COVER THE TOP AND BOTH SIDES.

WEATHER COVER — N.T.S. 1

System No. W-L-8047
F Rating – 2 Hr
T Rating – 1/4 Hr
W-L-8047

Classified by Underwriters Laboratories, Inc. to UL 1479 and CAN/ULC-S115

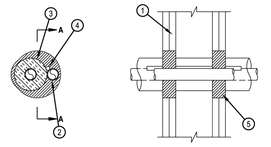

1. Wall Assembly — The 2 hr fire-rated gypsum board/stud wall assembly shall be constructed of the materials and in the manner described in the individual U300, U400, V400 or W400 Series Wall or Partition Design in the UL Fire Resistance Directory and shall include the following construction features:
   A. Studs — Wall framing shall consist of either wood studs or steel channel studs. Wood studs to consist of nom 2 by 4 in. (51 by 102 mm) lumber spaced max 16 in. (406 mm) OC. Steel studs to be min 3-1/2 in. (89 mm) wide and spaced max 24 in. (610 mm) OC.
   B. Gypsum Board* — The gypsum board type, thickness number of layers, fastener type and sheet orientation shall be specified in the individual Wall and Partition Design in the UL Fire Resistance Directory. Max diam of opening is 4-1/2 in. (114 mm).
2. Through Penetrants — One or more pipe or tubing to be installed concentrically or eccentrically within the opening. The space between any penetrant and the periphery of the opening shall be min 0 in. (point contact) to max 1-1/4 in. (32 mm). Pipes or tubing to be rigidly supported on both sides of wall assembly. The following types and sizes of metallic pipes or tubing may be used:
   A. Copper Tube — Nom 1 in. (25 mm) diam (or smaller) Type L (or heavier) copper tube.
   B. Copper Pipe — Nom 1 in. (25 mm) diam (or smaller) Regular (or heavier) copper pipe.
3. Tube Insulation – Plastic* — Nom 3/4 in. (19 mm) thick acrylonitrile butadiene/polyvinyl chloride (AB/PVC) flexible foam furnished in the form of tubing. Tube insulation to be installed on one or more of the metallic pipes or tubes.
   See Plastic+ (QMFZ2) category in the Plastics Recognized Component Directory for names of manufacturers. Any Recognized Component tube insulation material meeting the above specifications and having a UL 94 Flammability Classification of 94-5VA may be used.
4. Cables — Max of one 4 pair No. 18 AWG (or smaller) cable with PVC insulation and jacket materials.
5. Fill, Void or Cavity Material - Sealant* — Min 1-1/4 in. (32 mm) thickness of fill material applied within annulus between penetrants and gypsum board, flush with both surfaces of wall. At point contact, a 1/4 in. (6 mm) bead of fill material shall be applied at the penetrant/gypsum board interface on both sides of wall.
   HILTI CONSTRUCTION CHEMICALS, DIV OF HILTI INC — FS-ONE Sealant or FS-ONE MAX Intumescent Sealant

* Indicates such products shall bear the UL or cUL Certification Mark for jurisdictions employing the UL or cUL Certification (such as Canada), respectively.

Hilti Firestop Systems

Reproduced by HILTI, Inc. Courtesy of Underwriters Laboratories, Inc. January 28, 2015

PIPE THRU WALL W/ FIRESTOP — N.T.S. 3

IDENTIFICATION STAMP
DIV. OF THE STATE ARCHITECT
APP: 02-122821 INC: 2
REVIEWED FOR
SS ☑ FLS ☑ ACS ☑
DATE: 11/20/2025

Teter, Inc. expressly reserves its common law copyright and other property rights in these plans. This document, the ideas and designs incorporated herein, as an instrument of professional service, is not to be used in whole or in part, for any other project without prior written authorization.

MARK	DATE	DESCRIPTION
A.	11/13/2025	DSA BACKCHECK

TETER, INC.
FRESNO HEADQUARTERS
VISALIA | BAKERSFIELD | MODESTO | SAN LUIS OBISPO
ARCHITECTS ENGINEERS CONNECTED

VISALIA CAMPUS UNIVERSITY CENTER
COLLEGE OF THE SEQUOIAS
915 S. MOONEY BLVD
VISALIA, CALIFORNIA

DRAWING TITLE
MECHANICAL DETAILS

PROJECT NO.
22-12498

DRAWING
M801.2

\\tet-file1\Users\zachary.davis_TETR\Documents\12498-M-UC_zachary.davis@WYRV.rvt

System No. W-L-5029

WL 5029

Classified by Underwriters Laboratories, Inc. to UL 1479 and CAN/ULC-S115

ANSI/UL 1479 (ASTM E814)	CAN/ULC S115
F Ratings — 1, 2 and 3 Hr (See Items 1, 3 and 4)	F Ratings — 1, 2 and 3 Hr (See Items 1, 3 and 4)
T Ratings — 0, 1/2, 1 and 1-1/4 Hr (See Item 3)	FT Ratings — 0, 1/2, 1 and 1-1/4 Hr (See Item 3)
L Rating At Ambient — 4 CFM/Sq Ft	FH Ratings — 1, 2 and 3 Hr (See Items 1, 2 and 4)
L Rating At 400 F — Less Than 1 CFM/Sq Ft	FTH Ratings — 0, 1/2, 1 and 1-1/4 Hr (See Item 3)
	L Rating At Ambient — 4 CFM/Sq Ft
	L Rating At 400 F — Less Than 1 CFM/Sq Ft

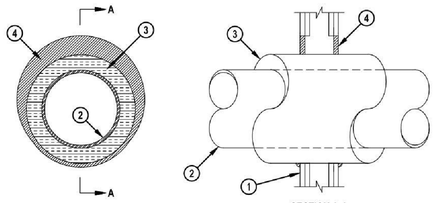

1. Wall Assembly — The 1, 2 or 3 hr fire-rated gypsum board/stud wall assembly shall be constructed of the materials and in the manner specified in the individual U300, U400, V400 or W400 Series Wall and Partition Designs in the UL Fire Resistance Directory and shall include the following construction features:
   A. Studs — Wall framing may consist of either wood studs or steel channel studs. Wood studs to consist of nom 2 by 4 in. (51 by 102 mm) lumber spaced 16 in. (406 mm) OC. Steel studs to be min 2-1/2 in. (64 mm) wide for 1 and 2 hr F and FH rating and 3-1/2 in. (89 mm) wide for 3 hr F and FH rating and spaced max 24 in. (610 mm) OC.
   B. Gypsum Board* — Min 5/8 in. (16 mm) thick with square or tapered edges. The gypsum board type, thickness, number of layers, fastener type and sheet orientation shall be as specified in the individual Wall and Partition Design. Max diam of opening is 18-5/8 in. (473 mm). The hourly F and FH Ratings of the firestop system are equal to the hourly fire rating of the wall assembly in which it is installed.
2. Through Penetrants — One metallic pipe or tubing to be installed within the firestop system. Pipe or tubing to be rigidly supported on both sides of wall assembly. The following types and sizes of metallic pipes or tubing may be used:
   A. Steel Pipe — Nom 12 in. (305 mm) diam (or smaller) Schedule 10 (or heavier) steel pipe.
   B. Iron Pipe — Nom 12 in. (305 mm) diam (or smaller) cast or ductile iron pipe.
   C. Copper Tubing — Nom 6 in. (152 mm) diam (or smaller) Type L (or heavier) copper tubing. When the hourly F or FH Rating of the firestop system is 3 hr, the nom diam of copper tube shall not exceed 4 in. (102 mm).
   D. Copper Pipe — Nom 6 in. (152 mm) diam (or smaller) Regular (or heavier) copper pipe. When the hourly F or FH Rating of the firestop system is 3 hr, the nom diam of copper pipe shall not exceed 4 in. (102 mm).

HILTI — Hilti Firestop Systems

Reproduced by HILTI, Inc. Courtesy of Underwriters Laboratories, Inc. July 17, 2015

System No. W-L-5029

WL 5029

3. Pipe Covering* — Nom 1, 1-1/2 or 2 in. (25, 38 or 51 mm) thick hollow cylindrical heavy density (min 3.5 pcf or 56 kg/m3) glass fiber units jacketed on the outside with an all service jacket. Longitudinal joints sealed with metal fasteners or factory-applied self-sealing lap tape. Transverse joints secured with metal fasteners or with butt tape supplied with the product. For 1 and 2 hr F and FH Ratings, the annular space between insulated penetrant and periphery of opening shall be max 0 in. (point contact) to max 1-7/8 in. (48 mm). For 3 hr F and FH Ratings, the annular space shall be min 0 in. (point contact) to max 1-1/4 in. (32 mm).
   See Pipe and Equipment Covering — Materials (BRGU) category in the Building Material Directory for the names of manufacturers. Any pipe covering material meeting the above specifications and bearing the UL Classification Marking with a Flame Spread Index of 25 or less and a Smoke Developed Index of 50 or less may be used.
   The hourly T, FT, FTH Ratings of the firestop system are 1/2 hr for 1 hr rated walls and 1 hr for 2 hr rated walls. For 3 hr rated walls, the hourly T, FT and FTH Ratings when steel and iron pipes are used are 1 hr. For 3 hr rated walls, the hourly T, FT and FTH Ratings when copper penetrants are used are 1-1/4 hr for 2 in. (51 mm) thick pipe covering and 0 hr for pipe covering thickness less than 2 in. (51 mm).
   3A. Pipe Covering* — (Not Shown) — As an alternate to Item 3, max 2 in. (51 mm) thick cylindrical calcium silicate (min 14 pcf) units sized to the outside diam of the pipe or tube may be used. Pipe insulation secured with stainless steel bands or min 18 AWG stainless steel wire spaced max 12 in. (305 mm) OC. When the alternate pipe covering is used, the T and FT Rating shall be as specified in item 3 above.
   See Pipe and Equipment Covering — Materials (BRGU) category in the Building Materials Directory for names of manufacturers. Any pipe covering material meeting the above specifications and bearing the UL Classification Marking with a Flame Spread Index of 25 or less and a Smoke Developed Index of 50 or less may be used.
4. Fill, Void or Cavity Material* — Sealant — For 1 and 2 hr F and FH Rating, min 5/8 in. (16 mm) thickness of fill material applied within the annulus, flush with both surfaces of wall. For 3 hr F and FH Rating, min 1 in. (25 mm) thickness of fill material applied within the annulus, flush with both surfaces of wall. At the point contact location between pipe covering and gypsum board, a min 1/2 in. (13 mm) diam bead of fill material shall be applied at the pipe covering/gypsum board interface on both surfaces of wall.
   HILTI CONSTRUCTION CHEMICALS, DIV OF HILTI INC — FS-One Sealant or FS-ONE MAX Intumescent Sealant

* Indicates such products shall bear the UL or cUL Certification Mark for jurisdictions employing the UL or cUL Certification (such as Canada), respectively.

HILTI — Hilti Firestop Systems

Reproduced by HILTI, Inc. Courtesy of Underwriters Laboratories, Inc. July 17, 2015

FIRE BARRIER PIPE PENETRATION N.T.S. 24

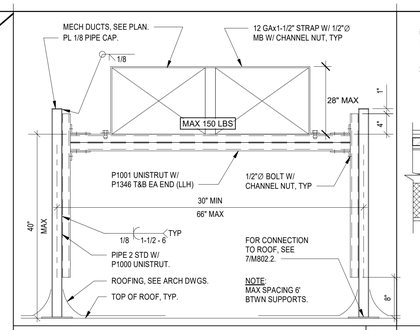

DUCT SUPPORT ON ROOF N.T.S. 6

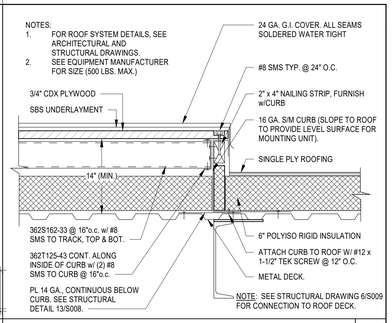

PLATFORM DETAIL N.T.S. 1

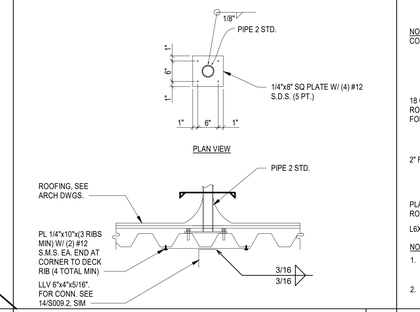

DUCT SUPPORT BASE CONNECTION N.T.S. 7

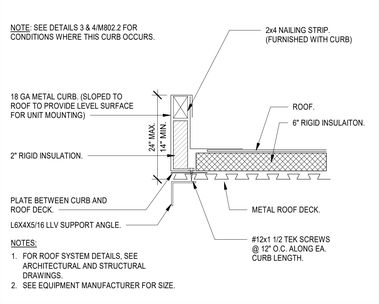

METAL CURB DETAIL N.T.S. 2

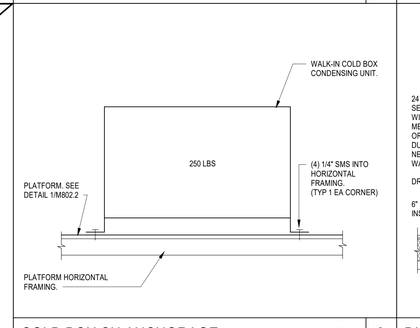

COLD BOX CU ANCHORAGE N.T.S. 8

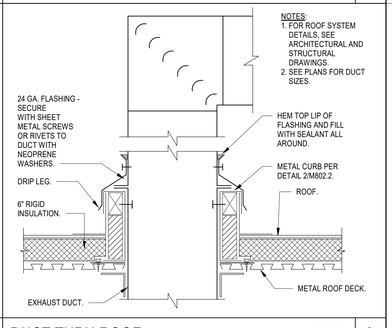

DUCT THRU ROOF N.T.S. 3

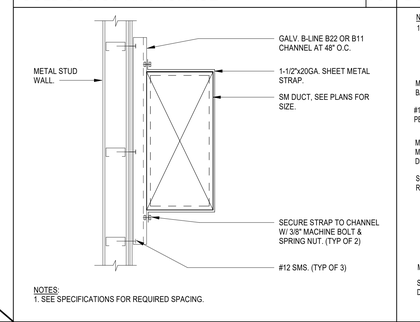

DUCT ON WALL N.T.S. 9

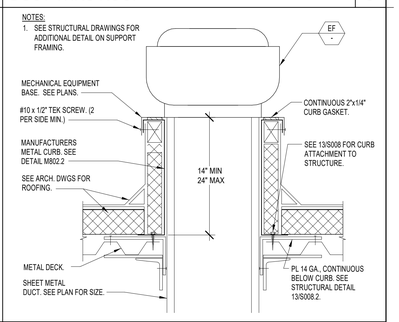

EF ON ROOF N.T.S. 4

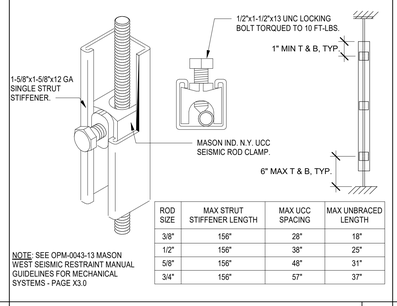

ROD SIZE	MAX STRUT STIFFENER LENGTH	MAX UCC SPACING	MAX UNBRACED LENGTH
3/8"	156"	28"	18"
1/2"	156"	38"	25"
5/8"	156"	48"	31"
3/4"	156"	57"	37"

NOTE: SEE OPM-0043-13 MASON WEST SEISMIC RESTRAINT MANUAL GUIDELINES FOR MECHANICAL SYSTEMS - PAGE X3.0

ROD STIFFENER N.T.S. 25

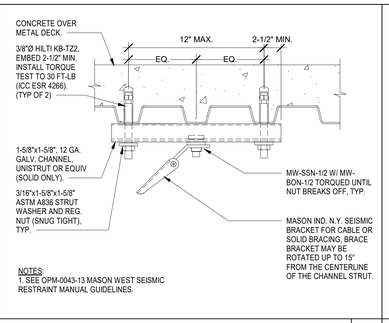

NOTES:
1. SEE OPM-0043-13 MASON WEST SEISMIC RESTRAINT MANUAL GUIDELINES.

UPPER ATTACHMENT DETAIL N.T.S. 20

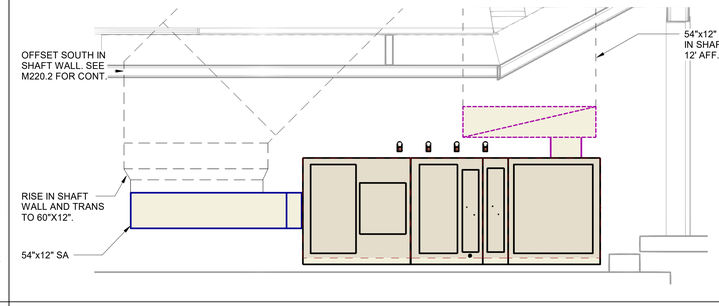

SECTION VIEW - AHU-1 N.T.S. 10

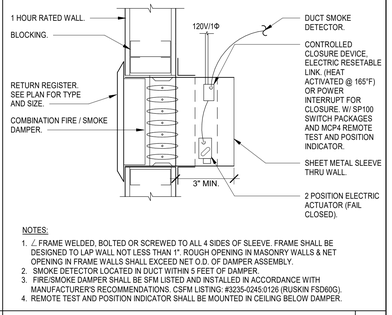

FIRE/SMOKE DAMPER AT GRILLE N.T.S. 5

IDENTIFICATION STAMP
DIV. OF THE STATE ARCHITECT
APP: 02-122821 INC: 2
REVIEWED FOR
SS ☑ FLS ☑ ACS ☑
DATE: 11/20/2025

Teter, Inc. expressly reserves its common law copyright and other property rights in these plans. This document, the ideas and designs incorporated herein, as an instrument of professional service, is not to be used in whole or in part, for any other project without prior written authorization.

MARK	DATE	DESCRIPTION
A.	11/13/2025	DSA BACKCHECK

TETER, INC.
ARCHITECTS ENGINEERS CONNECTED
FRESNO HEADQUARTERS
VISALIA | BAKERSFIELD | MODESTO | SAN LUIS OBISPO

VISALIA CAMPUS UNIVERSITY CENTER
COLLEGE OF THE SEQUOIAS
915 S. MOONEY BLVD
VISALIA, CALIFORNIA

DRAWING TITLE
MECHANICAL DETAILS

PROJECT NO.
22-12498

DRAWING
M802.2

PLOT DATE: 11/10/2025 4:34:31 PM

\\tet-file1\Users\zachary.davis_TETR\Documents\12498-M-UC_zachary.davis8WYRV.rvt

MASON TYPE RSC - ROOFTOP SPRING ISOLATION CURB
3" STATIC DEFLECTION ISOLATION (LARR 24589)

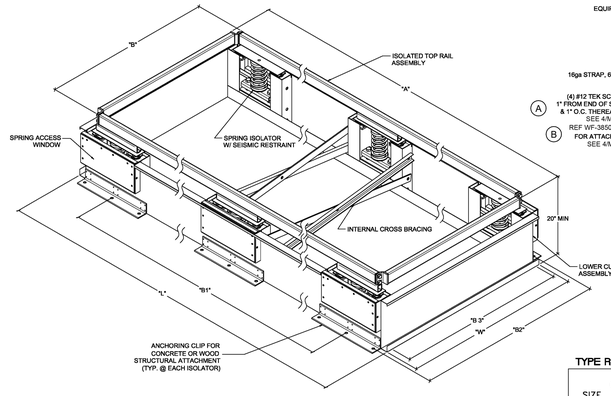

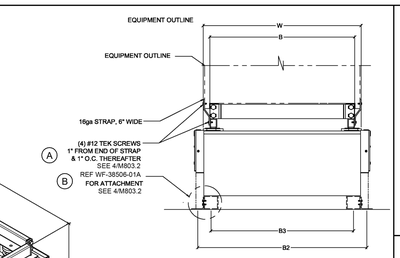

TYPE RSC LOAD RATINGS *with RED spring inside

SIZE	Rated Capacity (lbs)	Rated Defl. (in)	Spring Constant (lbs/in)	Free Ht. (in)	O.D. (in)	Spring Color
771/772	1854	3.00	618.00	7.62	4	Purple*
770/772	1569	3.00	523.00	7.62	4	Blue*
771	1155	3.00	385.00	7.62	4	Purple
770	870	3.00	290.00	7.62	4	Blue
769	720	3.00	240.00	7.20	4	Gray
768	600	3.33	180.00	7.20	4	White
767	450	3.33	128.57	7.20	4	Black
766	325	3.33	92.86	7.20	4	Yellow

QTY	TAG	MODEL TRANE	OPERATING WEIGHT	RSC CURB WEIGHT	TOTAL WEIGHT	NUMBER OF ISOLATORS	NUMBER OF SEISMIC STRAPS	NUMBER OF ANCHORING CLIP	"A"	"B"	"L"	"W"	"B1"	"B2"	"B3"	ISOLATOR
(2)	DOAS-1,2	WILSENERGY	6500	1258	7758	8	8	8	240	72	246 1/2	74 1/2	222 1/2	77 1/2	71	(8) 770/772
(1)	DOAS-3	TRANE - CSAA 014	2580	850	3430	6	6	6	138 7/8	71	145 3/8	73 1/2	121 3/8	76 1/2	70	(6) 768
(1)	ERV-1	FVTS-7500	1800	612	2412	4	4	4	90 5/8	59 7/8	97 1/8	62 3/8	73 1/8	65 3/8	58 7/8	(4) 768
(4)	ERV-2,3,4,5	FVTS-4000/5000	1150	505	1655	4	4	4	74 3/16	49 1/2	80 11/16	52	56 11/16	55	48 1/2	(4) 768

A1

MASON INDUSTRIES, Inc.
Manufacturers of Vibration Control Products
350 Rabro Drive
Hauppauge, NY 11788
631/348-0282
FAX 631/348-0279
201 W. Crescent St., Suite D
Redlands, CA 92373
714/535-2727
FAX 714/535-2738
Email: info@Mason-Ind.com
www.Mason-Ind.com

PROJECT NAME: COS UC
PREPARED FOR: TRANE

MARK	DATE	DESCRIPTION
A.	11/13/2025	DSA BACKCHECK

MASON EQ: 38506
DATE: 08/20/25
DWN BY: NN
CHKD BY:
SHEET TITLE: SPRING ISOLATED ROOF CURBS FOR ROOFTOP UNITS
SCALE: (NONE)
SHEET NO.: WF-38506-01

ISOLATION CURB - DOAS-1,2,3, ERV-1,2,3,4,5 N.T.S. 2

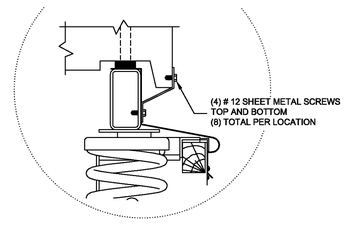

ATTACHMENT OF AIR HANDLER TO CURB

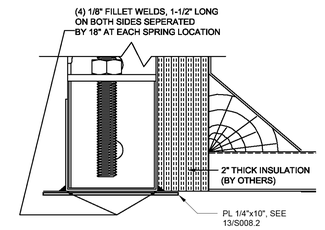

STEEL ATTACHMENT

ATTACHMENT OF CURB TO STRUCTURE

ISOLATION CURB - DOAS-1,2,3, ERV-1,2,3,4,5 N.T.S. 4

IDENTIFICATION STAMP
DIV. OF THE STATE ARCHITECT
APP: 02-122821 INC: 2
REVIEWED FOR
SS ☑ FLS ☑ ACS ☑
DATE: 11/20/2025

Teter, Inc. expressly reserves its common law copyright and other property rights in these plans. This document, the ideas and designs incorporated herein, as an instrument of professional service, is not to be used in whole or in part, for any other project without prior written authorization.

TETER, INC.
FRESNO HEADQUARTERS
VISALIA | BAKERSFIELD | MODESTO | SAN LUIS OBISPO
ARCHITECTS ENGINEERS CONNECTED

VISALIA CAMPUS UNIVERSITY CENTER
COLLEGE OF THE SEQUOIAS
915 S. MOONEY BLVD
VISALIA, CALIFORNIA

DRAWING TITLE: MECHANICAL DETAILS

PROJECT NO. 22-12498

DRAWING M803.2

PLOT DATE: 11/10/2025 4:34:31 PM

\\tetr-file1\Users\zachary.davis_TETR\Documents\12498-M-UC_zachary.davis8WYRV.rvt

STATE OF CALIFORNIA

Envelope Component Approach

CALIFORNIA ENERGY COMMISSION

CERTIFICATE OF COMPLIANCE			NRCC-ENV-E
This document is used to demonstrate compliance with mandatory requirements in 110.8(g) and 120.7(b)/ 160.1 for newly constructed nonresidential, hotel/ motel, multifamily and mixed-use buildings, and 141.0(b)1/ 180.2 for alterations, related to roof, wall and floor assemblies. It is also used to demonstrate compliance with prescriptive requirements in 140.3/ 170.2 for newly constructed buildings, and 141.0/ 180.1/ 180.2 for additions and alterations, related to roof, wall, floor, door, fenestration and daylighting requirements.			
Project Name:	COS Visalia - University Center	**Report Page:**	**(Page 1 of 42)**
Project Address:	915 S. Mooney Blvd.	**Date Prepared:**	2/4/2025

A. GENERAL INFORMATION

01	Project Location (city)	Visalia	05	# of Stories (Habitable Above Grade)	1
02	Zipcode	93277	06	Total Conditioned Floor Area (ft^2)	46193
03	Climate Zone	13	07	Total Unconditioned Floor Area (ft^2)	3567
04	Occupancy Types Within Project: (select all that apply): If one occupancy constitutes >= 80% of the conditioned floor area, the entire building envelope may be designed to comply with the provisions of that occupancy per 100.0(f).		08	☐	Project includes unconditioned enclosed space(s) > 5,000 ft^2 under a roof with a ceiling height of at least 15 ft.[1]
● Office ● Support Areas ● All Other Occupancies					

[1] FOOTNOTE: Enclosed spaces > 5,000 ft^2 directly under roof with ceiling height > 15 ft in climate zones 2 through 15 are required to meet the minimum daylighting requirements defined in 140.3(c)/ 170.2(b). Compliance with 140.3(c)/ 170.2(b) is documented in Table L. This is the only prescriptive requirement which applies to unconditioned spaces.

B. PROJECT SCOPE

This table specifies project envelope components within the permit application demonstrating compliance using the prescriptive paths outlined in 140.3/ 170.2 and 141.0(a)1/ 180.1 and 141.0(b)1 and 2/ 180.2 for additions and alterations.

My project consists of (check all that apply)	Component Types					
01	02					
☒ New Construction or Newly Conditioned Space	☒	Roof	☒	Walls	☒	Exterior Opaque Doors
☐ One or more enclosed spaces > 5,000 ft^2 directly under roof with ceiling height > 15ft			☒	Floors	☒	Fenestration/ Glazed Doors[1]
☐ Addition of conditioned space	☐	Roof	☐	Walls	☐	Exterior Opaque Doors
☐ One or more enclosed spaces > 5,000 ft^2 directly under roof with ceiling height > 15ft						
☐ Addition is <=700 ft^2			☐	Floors	☐	Fenestration/ Glazed Doors[1]
☐ Addition is >700 ft^2						
☐ Alteration of conditioned space	☐	Roof Assembly	☐	Walls		
☐ One or more enclosed spaces > 5,000 ft^2 directly under roof with ceiling height > 15ft and lighting system installed for the first time	☐	Roofing Material[2]	☐	Floors	☐	Fenestration

STATE OF CALIFORNIA

Envelope Component Approach

CALIFORNIA ENERGY COMMISSION

CERTIFICATE OF COMPLIANCE			NRCC-ENV-E
Project Name:	COS Visalia - University Center	**Report Page:**	**(Page 2 of 42)**
		Date Prepared:	2/4/2025

B. PROJECT SCOPE

[1]FOOTNOTE: Doors that are more than 25% glass in area are considered Glazed Doors and should be documented on table K with fenestration.
[2]Roof recovers and replacements must also check "Roof Assembly" box and document compliance with insulation requirements in Table F. Roof recoats may document compliance with roof material only in Table G.

C. COMPLIANCE RESULTS

Results in this table are automatically calculated from data input and calculations in Tables F through L. Note: If any cell on this table says "COMPLIES with Exceptional Conditions" refer to Table D. Exceptional Conditions for guidance or see the applicable table referenced below.

Opaque Envelope Components					Fenestration	Daylighting Spaces > 5,000ft²	Compliance Results
Roof Assembly	Roofing Materials	Walls	Floors	Doors			
01	02	03	04	05	06	07	08
(See Table F)	(See Table G)	(See Table H)	(See Table I)	(See Table J)	(See Table K)	(See Table L)	COMPLIES
Yes	Yes	Yes	Yes	Yes	Yes		

D. EXCEPTIONAL CONDITIONS

This table is auto-filled with uneditable comments because of selections made or data entered in tables throughout the form.

E. ADDITIONAL REMARKS

This table includes remarks made by the permit applicant to the Authority Having Jurisdiction.

F. ROOF ASSEMBLY SCHEDULE

This table demonstrates compliance for prescriptive roof assembly requirements in 140.3(a)1B/ 170.2(a)1B for new construction, 141.0(a)/ 180.1 for additions, or 141.0(b)2Biii/ 180.2 for alterations,

01	Indicate roof types included in the project:	☐ Framed	☐ Framed-Multifamily	☐ SIPS	☒ Span Deck & Concrete	☐ Metal Panels	☐ Metal Building

Span Deck And Concrete Roof Assemblies

01	☒	Include Span Deck and Concrete Roof Assemblies in Area-Weighted Average U-factor Calculation[1]		
02	03	04	05	06

STATE OF CALIFORNIA

Envelope Component Approach

CALIFORNIA ENERGY COMMISSION

CERTIFICATE OF COMPLIANCE			NRCC-ENV-E
Project Name:	COS Visalia - University Center	**Report Page:**	**(Page 3 of 42)**
		Date Prepared:	2/4/2025

F. ROOF ASSEMBLY SCHEDULE

Span Deck And Concrete Roof Assemblies

Tag/Plan Detail ID	Name/Description	Status	Exception to Roof Insulation Requirements in 141.0(b)2Biii (Alts. Only)	Occupancy Type
N Roof	Metal Deck R30 Rigid	New		Nonresidential/ Relocatable 1 CZ
Roof	Metal Deck R30 Rigid	New		Nonresidential/ Relocatable 1 CZ
S Roof	Metal Deck R30 Rigid	New		Nonresidential/ Relocatable 1 CZ
S Roof	Metal Deck R30 Rigid	New		Nonresidential/ Relocatable 1 CZ
S Roof	Metal Deck R30 Rigid	New		Nonresidential/ Relocatable 1 CZ
S Roof	Metal Deck R30 Rigid	New		Nonresidential/ Relocatable 1 CZ
S Roof	Metal Deck R30 Rigid	New		Nonresidential/ Relocatable 1 CZ
N Roof	Metal Deck R30 Rigid	New		Nonresidential/ Relocatable 1 CZ
S Roof	Metal Deck R30 Rigid	New		Nonresidential/ Relocatable 1 CZ
S Roof	Metal Deck R30 Rigid	New		Nonresidential/ Relocatable 1 CZ
S Roof	Metal Deck R30 Rigid	New		Nonresidential/ Relocatable 1 CZ
S Roof	Metal Deck R30 Rigid	New		Nonresidential/ Relocatable 1 CZ
S Roof	Metal Deck R30 Rigid	New		Nonresidential/ Relocatable 1 CZ
S Roof	Metal Deck R30 Rigid	New		Nonresidential/ Relocatable 1 CZ

STATE OF CALIFORNIA

Envelope Component Approach

CALIFORNIA ENERGY COMMISSION

CERTIFICATE OF COMPLIANCE			NRCC-ENV-E
Project Name:	COS Visalia - University Center	**Report Page:**	**(Page 4 of 42)**
		Date Prepared:	2/4/2025

F. ROOF ASSEMBLY SCHEDULE

Span Deck And Concrete Roof Assemblies

S Roof	Metal Deck R30 Rigid	New		Nonresidential/ Relocatable 1 CZ
S Roof	Metal Deck R30 Rigid	New		Nonresidential/ Relocatable 1 CZ
S Roof	Metal Deck R30 Rigid	New		Nonresidential/ Relocatable 1 CZ
N Roof	Metal Deck R30 Rigid	New		Nonresidential/ Relocatable 1 CZ
N Roof	Metal Deck R30 Rigid	New		Nonresidential/ Relocatable 1 CZ
Roof	Metal Deck R30 Rigid	New		Nonresidential/ Relocatable 1 CZ
N Roof	Metal Deck R30 Rigid	New		Nonresidential/ Relocatable 1 CZ
Roof	Metal Deck R30 Rigid	New		Nonresidential/ Relocatable 1 CZ
N Roof	Metal Deck R30 Rigid	New		Nonresidential/ Relocatable 1 CZ
N Roof	Metal Deck R30 Rigid	New		Nonresidential/ Relocatable 1 CZ
N Roof	Metal Deck R30 Rigid	New		Nonresidential/ Relocatable 1 CZ
Roof	Metal Deck R30 Rigid	New		Nonresidential/ Relocatable 1 CZ
N Roof	Metal Deck R30 Rigid	New		Nonresidential/ Relocatable 1 CZ
S Roof	Metal Deck R30 Rigid	New		Nonresidential/ Relocatable 1 CZ
S Roof	Metal Deck R30 Rigid	New		Nonresidential/ Relocatable 1 CZ

STATE OF CALIFORNIA

Envelope Component Approach

CALIFORNIA ENERGY COMMISSION

CERTIFICATE OF COMPLIANCE			NRCC-ENV-E
Project Name:	COS Visalia - University Center	**Report Page:**	**(Page 5 of 42)**
		Date Prepared:	2/4/2025

F. ROOF ASSEMBLY SCHEDULE

Span Deck And Concrete Roof Assemblies

S Roof	Metal Deck R30 Rigid	New		Nonresidential/ Relocatable 1 CZ
Roof	Metal Deck R30 Rigid	New		Nonresidential/ Relocatable 1 CZ
S Roof	Metal Deck R30 Rigid	New		Nonresidential/ Relocatable 1 CZ
S Roof	Metal Deck R30 Rigid	New		Nonresidential/ Relocatable 1 CZ
Roof	Metal Deck R30 Rigid	New		Nonresidential/ Relocatable 1 CZ
Roof	Metal Deck R30 Rigid	New		Nonresidential/ Relocatable 1 CZ
Roof	Metal Deck R30 Rigid	New		Nonresidential/ Relocatable 1 CZ

07	08	09	10	11	12	13	14		15
Tag/Plan Detail ID	How Design U-factor was determined	Fireproofing	Concrete Topping Thickness (in.)	Continuous Insulation per Design[2]	Thermal Performance Unit	Required Thermal Performance[3]	U-factor per Design		Net Area[4] ft^2
							per JA4	per Software/ Other	
N Roof	JA4 Tables			30	U-factor	0.034		0.031	2745
Roof	JA4 Tables			30	U-factor	0.034		0.031	310
S Roof	JA4 Tables			30	U-factor	0.034		0.031	1632

STATE OF CALIFORNIA

Envelope Component Approach

CALIFORNIA ENERGY COMMISSION

CERTIFICATE OF COMPLIANCE			NRCC-ENV-E
Project Name:	COS Visalia - University Center	**Report Page:**	**(Page 6 of 42)**
		Date Prepared:	2/4/2025

F. ROOF ASSEMBLY SCHEDULE

07	08	09	10	11	12	13	14		15
Tag/Plan Detail ID	How Design U-factor was determined	Fireproofing	Concrete Topping Thickness (in.)	Continuous Insulation per Design[2]	Thermal Performance Unit	Required Thermal Performance[3]	U-factor per Design		Net Area[4] ft^2
							per JA4	per Software/ Other	
S Roof	JA4 Tables			30	U-factor	0.034		0.031	1305
S Roof	JA4 Tables			30	U-factor	0.034		0.031	280
S Roof	JA4 Tables			30	U-factor	0.034		0.031	1608
S Roof	JA4 Tables			30	U-factor	0.034		0.031	1225
N Roof	JA4 Tables			30	U-factor	0.034		0.031	980
S Roof	JA4 Tables			30	U-factor	0.034		0.031	125
S Roof	JA4 Tables			30	U-factor	0.034		0.031	125
S Roof	JA4 Tables			30	U-factor	0.034		0.031	247

STATE OF CALIFORNIA

Envelope Component Approach

CALIFORNIA ENERGY COMMISSION

CERTIFICATE OF COMPLIANCE			NRCC-ENV-E
Project Name:	COS Visalia - University Center	**Report Page:**	**(Page 7 of 42)**
		Date Prepared:	2/4/2025

F. ROOF ASSEMBLY SCHEDULE

07	08	09	10	11	12	13	14		15
Tag/Plan Detail ID	How Design U-factor was determined	Fireproofing	Concrete Topping Thickness (in.)	Continuous Insulation per Design[2]	Thermal Performance Unit	Required Thermal Performance[3]	U-factor per Design		Net Area[4] ft^2
							per JA4	per Software/ Other	
S Roof	JA4 Tables			30	U-factor	0.034		0.031	75
S Roof	JA4 Tables			30	U-factor	0.034		0.031	255
S Roof	JA4 Tables			30	U-factor	0.034		0.031	67
S Roof	JA4 Tables			30	U-factor	0.034		0.031	75
S Roof	JA4 Tables			30	U-factor	0.034		0.031	250
S Roof	JA4 Tables			30	U-factor	0.034		0.031	250
N Roof	JA4 Tables			30	U-factor	0.034		0.031	770
N Roof	JA4 Tables			30	U-factor	0.034		0.031	261

STATE OF CALIFORNIA

Envelope Component Approach

CALIFORNIA ENERGY COMMISSION

CERTIFICATE OF COMPLIANCE			NRCC-ENV-E
Project Name:	COS Visalia - University Center	**Report Page:**	**(Page 8 of 42)**
		Date Prepared:	2/4/2025

F. ROOF ASSEMBLY SCHEDULE

07	08	09	10	11	12	13	14		15
Tag/Plan Detail ID	How Design U-factor was determined	Fireproofing	Concrete Topping Thickness (in.)	Continuous Insulation per Design[2]	Thermal Performance Unit	Required Thermal Performance[3]	U-factor per Design		Net Area[4] ft^2
							per JA4	per Software/ Other	
Roof	JA4 Tables			30	U-factor	0.034		0.031	80
N Roof	JA4 Tables			30	U-factor	0.034		0.031	1030
Roof	JA4 Tables			30	U-factor	0.034		0.031	729
N Roof	JA4 Tables			30	U-factor	0.034		0.031	1180
N Roof	JA4 Tables			30	U-factor	0.034		0.031	233
N Roof	JA4 Tables			30	U-factor	0.034		0.031	136
Roof	JA4 Tables			30	U-factor	0.034		0.031	1300
N Roof	JA4 Tables			30	U-factor	0.034		0.031	574

STATE OF CALIFORNIA

Envelope Component Approach

CALIFORNIA ENERGY COMMISSION

CERTIFICATE OF COMPLIANCE			NRCC-ENV-E
Project Name:	COS Visalia - University Center	**Report Page:**	**(Page 9 of 42)**
		Date Prepared:	2/4/2025

F. ROOF ASSEMBLY SCHEDULE

07	08	09	10	11	12	13	14		15
Tag/Plan Detail ID	How Design U-factor was determined	Fireproofing	Concrete Topping Thickness (in.)	Continuous Insulation per Design[2]	Thermal Performance Unit	Required Thermal Performance[3]	U-factor per Design		Net Area[4] ft^2
							per JA4	per Software/ Other	
S Roof	JA4 Tables			30	U-factor	0.034		0.031	1090
S Roof	JA4 Tables			30	U-factor	0.034		0.031	164
S Roof	JA4 Tables			30	U-factor	0.034		0.031	1065
Roof	JA4 Tables			30	U-factor	0.034		0.031	928
S Roof	JA4 Tables			30	U-factor	0.034		0.031	1144
S Roof	JA4 Tables			30	U-factor	0.034		0.031	1400
Roof	JA4 Tables			30	U-factor	0.034		0.031	787
Roof	JA4 Tables			30	U-factor	0.034		0.031	118

IDENTIFICATION STAMP
DIV. OF THE STATE ARCHITECT
APP: 02-122821 INC: 2
REVIEWED FOR
SS ☑ FLS ☑ ACS ☑
DATE: 11/20/2025

Teter, Inc. expressly reserves its common law copyright and other property rights in these plans. This document, the ideas and designs incorporated herein, as an instrument of professional service, is not to be used in whole or in part, for any other project without prior written authorization.

MARK	DATE	DESCRIPTION
A	11/13/2025	DSA BACKCHECK

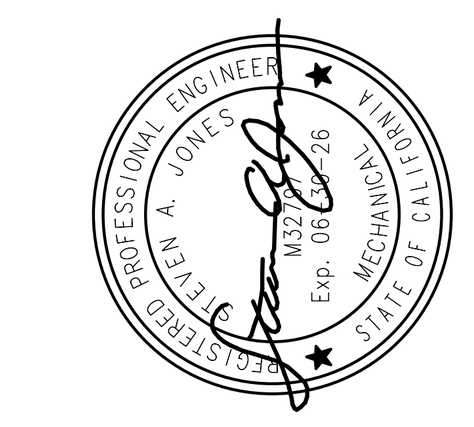

TETER, INC.
FRESNO HEADQUARTERS
VISALIA | BAKERSFIELD | MODESTO | SAN LUIS OBISPO
ARCHITECTS ENGINEERS CONNECTED

VISALIA CAMPUS UNIVERSITY CENTER
COLLEGE OF THE SEQUIOAS
915 S. MOONEY BLVD
VISALIA, CALIFORNIA

DRAWING TITLE
TITLE 24 DOCUMENTATION

PROJECT NO.
22-12498

DRAWING
M900.2

PLOT DATE: 8/19/2025 10:18:49 PM

\\tet-file-1\Users\zachary.davis_TETR\Documents\22498-M-UC_zachary.davisBWYRV.rvt
1/8" 1/0" 1'
IDENTIFICATION STAMP
DIV. OF THE STATE ARCHITECT
APP: 02-122821 INC: 2
REVIEWED FOR
SS ☑ FLS ☑ ACS ☑
DATE: 11/20/2025
Teter, Inc. expressly reserves its common law copyright and other property rights in these plans. This document, the ideas and designs incorporated herein, as an instrument of professional service, is not to be used in whole or in part, for any other project without prior written authorization.

STATE OF CALIFORNIA
Envelope Component Approach
CALIFORNIA ENERGY COMMISSION

CERTIFICATE OF COMPLIANCE		NRCC-ENV-E
Project Name: COS Visalia - University Center	**Report Page:**	**(Page 10 of 42)**
	Date Prepared:	2/4/2025

F. ROOF ASSEMBLY SCHEDULE

07	08	09	10	11	12	13	14		15
Tag/Plan Detail ID	How Design U-factor was determined	Fireproofing	Concrete Topping Thickness (in.)	Continuous Insulation per Design[2]	Thermal Performance Unit	Required Thermal Performance[3]	U-factor per Design		Net Area[4] ft²
Roof	JA4 Tables			30	U-factor	0.034	per JA4		222
							per Software/ Other	0.031	

[1] FOOTNOTES: If any individual assembly is non-compliant, assemblies may show compliance using an area-weighted calculation. Metal building roofs may not be combined with other roof types. The area-weighted compliance option is not available for alterations demonstrating compliance with R-values in Table 141.0-C.
[2] For alterations using U-factor as the Thermal Performance Unit, at least R-10 insulation must be above deck.
[3] If "R-value" is shown in cell 13 as the Thermal Performance Unit, the R-value shown here is for continuous insulation per Table 141.0-C.
[4] Roof area minus any fenestration/ skylight area

Area-Weighted Average U-factor Compliance Calculation for Framed/ SIPs/ Span Deck & Concrete/ Metal Panel Roofs

01	02	03	04	05
Roof Type	Total Area of Roof Type (ft²)	Area-weighted U-factor for Roof Type		Compliance Results Using Area-Weighted Calculation Option
		Required	Designed	
Span Deck & Concrete	24765	0.034	0.031	
Total for all Roof Types:	**24765**	**0.034**	**0.031**	**COMPLIES**

G. RATED ROOFING MATERIAL (COOL ROOF)

This table demonstrates compliance with prescriptive roof material requirements in 140.3(a)1A/ 170.2(a)1A for new construction, 141.0(a)/ 180.1 for additions, and 141.0(b)2B/ 180.2 for alterations. Roof recovers and replacements must also document compliance with insulation requirements in Table F. Roof recoats may document compliance with roof material only in Table G.

01	02	03	04	05	06	07	08	09	10
Tag/Plan Detail ID	Name/ Description/ Location	Status	Occupancy Type	Roof Slope	Roof Material	Compliance Method	Required Minimum Material Performance	Designed Material Performance	U-factor / R-value of Assembly

STATE OF CALIFORNIA
Envelope Component Approach
CALIFORNIA ENERGY COMMISSION

CERTIFICATE OF COMPLIANCE		NRCC-ENV-E
Project Name: COS Visalia - University Center	**Report Page:**	**(Page 11 of 42)**
	Date Prepared:	2/4/2025

G. RATED ROOFING MATERIAL (COOL ROOF)

Metal Deck R30 Rigid	N Roof	New	Nonresidential	Low slope	To Be Determined	Aged solar reflectance and thermal emittance	Reflectance	0.63	Reflectance[1]	0.7
							Emittance	0.75	Emittance	0.9
							SRI		SRI	

H. WALL ASSEMBLY SCHEDULE

This table demonstrates compliance with prescriptive wall assembly requirements in 140.3(a)/ 170.2(a) for new constructions, 141.0(a)/ 180.1 for additions and 141.0(b)1B/ 180.2 for alterations.

01	Indicate wall types included in the project:[1]	☒ Framed	☐ Mass (new only)	☐ Concrete Sandwich Panel (new only)	☐ SIPS	☐ ICF (new only)			
		☐ Metal Panels	☐ Metal Building	☐ Spandrel/ Curtain Wall	☐ Straw Bale	☐ Log Home (new only)			

[1] FOOTNOTES: Wall types indicated above as "(new only)" do not have Title 24, Part 6 requirements for alterations. New construction and additions do have requirements and should be clicked above and compliance demonstrated within this table.

Framed Walls

01	☐	Calculate Area-Weighted Average U-factor for Metal Framed Walls[1]
02	☐	Include Wood Framed Walls in Area-Weighted Average U-factor Calculation[1]

03	04	05	06	07	08	09	10	11	12		13
Tag/Plan Detail ID	Occupancy & Status	How Design U-factor was determined	Location/ Fire Rating	Frame Material, Spacing & Depth	Cavity Insulation per Design	Continuous Insulation per Design	Thermal Performance Unit	Required Thermal Performance	U-factor per Design		Net Area[3] ft²
NW Exterior Wall 58'x36'	Nonresidential/ Relocatable 1 CZ: New	JA4 Tables	Exterior wall	Metal 16" OC 2x8	19	12	U-factor	0.055	per JA4		806
									per Software/ Other	0.055	
NE Exterior Wall 60'x36'	Nonresidential/ Relocatable 1 CZ: New	JA4 Tables	Exterior wall	Metal 16" OC 2x8	19	12	U-factor	0.055	per JA4		446.2
									per Software/ Other	0.055	

STATE OF CALIFORNIA
Envelope Component Approach
CALIFORNIA ENERGY COMMISSION

CERTIFICATE OF COMPLIANCE		NRCC-ENV-E
Project Name: COS Visalia - University Center	**Report Page:**	**(Page 12 of 42)**
	Date Prepared:	2/4/2025

H. WALL ASSEMBLY SCHEDULE

03	04	05	06	07	08	09	10	11	12		13
Tag/Plan Detail ID	Occupancy & Status	How Design U-factor was determined	Location/ Fire Rating	Frame Material, Spacing & Depth	Cavity Insulation per Design	Continuous Insulation per Design	Thermal Performance Unit	Required Thermal Performance	U-factor per Design		Net Area[3] ft²
N Exterior Wall 28'6x22'	Nonresidential/ Relocatable 1 CZ: New	JA4 Tables	Exterior wall	Metal 16" OC 2x8	19	12	U-factor	0.055	per JA4		399
									per Software/ Other	0.055	
W Exterior Wall 26'x17'	Nonresidential/ Relocatable 1 CZ: New	JA4 Tables	Exterior wall	Metal 16" OC 2x8	19	12	U-factor	0.055	per JA4		213
									per Software/ Other	0.055	
SE Exterior Wall 13'-6"x17'-6	Nonresidential/ Relocatable 1 CZ: New	JA4 Tables	Exterior wall	Metal 16" OC 2x8	19	12	U-factor	0.055	per JA4		236
									per Software/ Other	0.055	
SE Exterior Wall 13'-6"x17'-6	Nonresidential/ Relocatable 1 CZ: New	JA4 Tables	Exterior wall	Metal 16" OC 2x8	19	12	U-factor	0.055	per JA4		236
									per Software/ Other	0.055	
N Exterior Wall	Nonresidential/ Relocatable 1 CZ: New	JA4 Tables	Exterior wall	Metal 16" OC 2x8	19	12	U-factor	0.055	per JA4		110
									per Software/ Other	0.055	
N Exterior Wall	Nonresidential/ Relocatable 1 CZ: New	JA4 Tables	Exterior wall	Metal 16" OC 2x8	19	12	U-factor	0.055	per JA4		115
									per Software/ Other	0.055	

STATE OF CALIFORNIA
Envelope Component Approach
CALIFORNIA ENERGY COMMISSION

CERTIFICATE OF COMPLIANCE		NRCC-ENV-E
Project Name: COS Visalia - University Center	**Report Page:**	**(Page 13 of 42)**
	Date Prepared:	2/4/2025

H. WALL ASSEMBLY SCHEDULE

03	04	05	06	07	08	09	10	11	12		13
Tag/Plan Detail ID	Occupancy & Status	How Design U-factor was determined	Location/ Fire Rating	Frame Material, Spacing & Depth	Cavity Insulation per Design	Continuous Insulation per Design	Thermal Performance Unit	Required Thermal Performance	U-factor per Design		Net Area[3] ft²
N Exterior Wall	Nonresidential/ Relocatable 1 CZ: New	JA4 Tables	Exterior wall	Metal 16" OC 2x8	19	12	U-factor	0.055	per JA4		142
									per Software/ Other	0.055	
N Exterior Wall	Nonresidential/ Relocatable 1 CZ: New	JA4 Tables	Exterior wall	Metal 16" OC 2x8	19	12	U-factor	0.055	per JA4		146
									per Software/ Other	0.055	
N Exterior Wall	Nonresidential/ Relocatable 1 CZ: New	JA4 Tables	Exterior wall	Metal 16" OC 2x8	19	12	U-factor	0.055	per JA4		137
									per Software/ Other	0.055	
N Exterior Wall	Nonresidential/ Relocatable 1 CZ: New	JA4 Tables	Exterior wall	Metal 16" OC 2x8	19	12	U-factor	0.055	per JA4		137
									per Software/ Other	0.055	
N Exterior Wall	Nonresidential/ Relocatable 1 CZ: New	JA4 Tables	Exterior wall	Metal 16" OC 2x8	19	12	U-factor	0.055	per JA4		71
									per Software/ Other	0.055	
N Exterior Wall	Nonresidential/ Relocatable 1 CZ: New	JA4 Tables	Exterior wall	Metal 16" OC 2x8	19	12	U-factor	0.055	per JA4		315
									per Software/ Other	0.055	

STATE OF CALIFORNIA
Envelope Component Approach
CALIFORNIA ENERGY COMMISSION

CERTIFICATE OF COMPLIANCE		NRCC-ENV-E
Project Name: COS Visalia - University Center	**Report Page:**	**(Page 14 of 42)**
	Date Prepared:	2/4/2025

H. WALL ASSEMBLY SCHEDULE

03	04	05	06	07	08	09	10	11	12		13
Tag/Plan Detail ID	Occupancy & Status	How Design U-factor was determined	Location/ Fire Rating	Frame Material, Spacing & Depth	Cavity Insulation per Design	Continuous Insulation per Design	Thermal Performance Unit	Required Thermal Performance	U-factor per Design		Net Area[3] ft²
N Exterior Wall	Nonresidential/ Relocatable 1 CZ: New	JA4 Tables	Exterior wall	Metal 16" OC 2x8	19	12	U-factor	0.055	per JA4		465
									per Software/ Other	0.055	
N Exterior Wall 14'	Nonresidential/ Relocatable 1 CZ: New	JA4 Tables	Exterior wall	Metal 16" OC 2x8	19	12	U-factor	0.055	per JA4		562
									per Software/ Other	0.055	
E Exterior Wall	Nonresidential/ Relocatable 1 CZ: New	JA4 Tables	Exterior wall	Metal 16" OC 2x8	19	12	U-factor	0.055	per JA4		665
									per Software/ Other	0.055	
S Exterior Wall	Nonresidential/ Relocatable 1 CZ: New	JA4 Tables	Exterior wall	Metal 16" OC 2x8	19	12	U-factor	0.055	per JA4		157
									per Software/ Other	0.055	
E Exterior Wall	Nonresidential/ Relocatable 1 CZ: New	JA4 Tables	Exterior wall	Metal 16" OC 2x8	19	12	U-factor	0.055	per JA4		316
									per Software/ Other	0.055	
S Exterior Wall	Nonresidential/ Relocatable 1 CZ: New	JA4 Tables	Exterior wall	Metal 16" OC 2x8	19	12	U-factor	0.055	per JA4		158
									per Software/ Other	0.055	

STATE OF CALIFORNIA
Envelope Component Approach
CALIFORNIA ENERGY COMMISSION

CERTIFICATE OF COMPLIANCE		NRCC-ENV-E
Project Name: COS Visalia - University Center	**Report Page:**	**(Page 15 of 42)**
	Date Prepared:	2/4/2025

H. WALL ASSEMBLY SCHEDULE

03	04	05	06	07	08	09	10	11	12		13
Tag/Plan Detail ID	Occupancy & Status	How Design U-factor was determined	Location/ Fire Rating	Frame Material, Spacing & Depth	Cavity Insulation per Design	Continuous Insulation per Design	Thermal Performance Unit	Required Thermal Performance	U-factor per Design		Net Area[3] ft²
S Exterior Wall	Nonresidential/ Relocatable 1 CZ: New	JA4 Tables	Exterior wall	Metal 16" OC 2x8	19	12	U-factor	0.055	per JA4		119
									per Software/ Other	0.055	
S Exterior Wall	Nonresidential/ Relocatable 1 CZ: New	JA4 Tables	Exterior wall	Metal 16" OC 2x8	19	12	U-factor	0.055	per JA4		144
									per Software/ Other	0.055	
S Exterior Wall	Nonresidential/ Relocatable 1 CZ: New	JA4 Tables	Exterior wall	Metal 16" OC 2x8	19	12	U-factor	0.055	per JA4		465
									per Software/ Other	0.055	
S Exterior Wall	Nonresidential/ Relocatable 1 CZ: New	JA4 Tables	Exterior wall	Metal 16" OC 2x8	19	12	U-factor	0.055	per JA4		472
									per Software/ Other	0.055	
S Exterior Wall	Nonresidential/ Relocatable 1 CZ: New	JA4 Tables	Exterior wall	Metal 16" OC 2x8	19	12	U-factor	0.055	per JA4		515
									per Software/ Other	0.055	
E Exterior Wall	Nonresidential/ Relocatable 1 CZ: New	JA4 Tables	Exterior wall	Metal 16" OC 2x8	19	12	U-factor	0.055	per JA4		665
									per Software/ Other	0.055	

STATE OF CALIFORNIA
Envelope Component Approach
CALIFORNIA ENERGY COMMISSION

CERTIFICATE OF COMPLIANCE		NRCC-ENV-E
Project Name: COS Visalia - University Center	**Report Page:**	**(Page 16 of 42)**
	Date Prepared:	2/4/2025

H. WALL ASSEMBLY SCHEDULE

03	04	05	06	07	08	09	10	11	12		13
Tag/Plan Detail ID	Occupancy & Status	How Design U-factor was determined	Location/ Fire Rating	Frame Material, Spacing & Depth	Cavity Insulation per Design	Continuous Insulation per Design	Thermal Performance Unit	Required Thermal Performance	U-factor per Design		Net Area[3] ft²
N Exterior Wall	Nonresidential/ Relocatable 1 CZ: New	JA4 Tables	Exterior wall	Metal 16" OC 2x8	19	12	U-factor	0.055	per JA4		105
									per Software/ Other	0.055	
W Exterior Wall 58'x17'	Nonresidential/ Relocatable 1 CZ: New	JA4 Tables	Exterior wall	Metal 16" OC 2x8	19	12	U-factor	0.055	per JA4		834
									per Software/ Other	0.055	
SW Exterior Wall 8'x22'	Nonresidential/ Relocatable 1 CZ: New	JA4 Tables	Exterior wall	Metal 16" OC 2x8	19	12	U-factor	0.055	per JA4		176
									per Software/ Other	0.055	
NW Exterior Wall 25'x18'	Nonresidential/ Relocatable 1 CZ: New	JA4 Tables	Exterior wall	Metal 16" OC 2x8	19	12	U-factor	0.055	per JA4		445
									per Software/ Other	0.055	
SW Exterior Wall 43'x18'	Nonresidential/ Relocatable 1 CZ: New	JA4 Tables	Exterior wall	Metal 16" OC 2x8	19	12	U-factor	0.055	per JA4		690
									per Software/ Other	0.055	
SE Exterior Wall 34'x18'	Nonresidential/ Relocatable 1 CZ: New	JA4 Tables	Exterior wall	Metal 16" OC 2x8	19	12	U-factor	0.055	per JA4		468
									per Software/ Other	0.055	

STATE OF CALIFORNIA
Envelope Component Approach
CALIFORNIA ENERGY COMMISSION

CERTIFICATE OF COMPLIANCE		NRCC-ENV-E
Project Name: COS Visalia - University Center	**Report Page:**	**(Page 17 of 42)**
	Date Prepared:	2/4/2025

H. WALL ASSEMBLY SCHEDULE

03	04	05	06	07	08	09	10	11	12		13
Tag/Plan Detail ID	Occupancy & Status	How Design U-factor was determined	Location/ Fire Rating	Frame Material, Spacing & Depth	Cavity Insulation per Design	Continuous Insulation per Design	Thermal Performance Unit	Required Thermal Performance	U-factor per Design		Net Area[3] ft²
NW Exterior Wall 7'-6"x18'	Nonresidential/ Relocatable 1 CZ: New	JA4 Tables	Exterior wall	Metal 16" OC 2x8	19	12	U-factor	0.055	per JA4		112
									per Software/ Other	0.055	
SW Exterior Wall 27'x18'	Nonresidential/ Relocatable 1 CZ: New	JA4 Tables	Exterior wall	Metal 16" OC 2x8	19	12	U-factor	0.055	per JA4		316
									per Software/ Other	0.055	
SE Exterior Wall 38"x16'	Nonresidential/ Relocatable 1 CZ: New	JA4 Tables	Exterior wall	Metal 16" OC 2x8	19	12	U-factor	0.055	per JA4		550
									per Software/ Other	0.055	
NW Exterior Wall 13'-6"x 14'	Nonresidential/ Relocatable 1 CZ: New	JA4 Tables	Exterior wall	Metal 16" OC 2x8	19	12	U-factor	0.055	per JA4		119
									per Software/ Other	0.055	
SE Exterior Wall 13'-6"x18'-6	Nonresidential/ Relocatable 1 CZ: New	JA4 Tables	Exterior wall	Metal 16" OC 2x8	19	12	U-factor	0.055	per JA4		250
									per Software/ Other	0.055	
SE Exterior Wall 13'-6"x18'-6	Nonresidential/ Relocatable 1 CZ: New	JA4 Tables	Exterior wall	Metal 16" OC 2x8	19	12	U-factor	0.055	per JA4		250
									per Software/ Other	0.055	

STATE OF CALIFORNIA
Envelope Component Approach
CALIFORNIA ENERGY COMMISSION

CERTIFICATE OF COMPLIANCE		NRCC-ENV-E
Project Name: COS Visalia - University Center	**Report Page:**	**(Page 18 of 42)**
	Date Prepared:	2/4/2025

H. WALL ASSEMBLY SCHEDULE

03	04	05	06	07	08	09	10	11	12		13
Tag/Plan Detail ID	Occupancy & Status	How Design U-factor was determined	Location/ Fire Rating	Frame Material, Spacing & Depth	Cavity Insulation per Design	Continuous Insulation per Design	Thermal Performance Unit	Required Thermal Performance	U-factor per Design		Net Area[3] ft²
N Exterior Wall 30'-10"x18'-6"	Nonresidential/ Relocatable 1 CZ: New	JA4 Tables	Exterior wall	Metal 16" OC 2x8	19	12	U-factor	0.055	per JA4		472
									per Software/ Other	0.055	
N Exterior Wall 28'6x18'-6"	Nonresidential/ Relocatable 1 CZ: New	JA4 Tables	Exterior wall	Metal 16" OC 2x8	19	12	U-factor	0.055	per JA4		404
									per Software/ Other	0.055	
N Exterior Wall 32'6x18'-6"	Nonresidential/ Relocatable 1 CZ: New	JA4 Tables	Exterior wall	Metal 16" OC 2x8	19	12	U-factor	0.055	per JA4		501
									per Software/ Other	0.055	
N Exterior Wall 6'x18'-6"	Nonresidential/ Relocatable 1 CZ: New	JA4 Tables	Exterior wall	Metal 16" OC 2x8	19	12	U-factor	0.055	per JA4		51
									per Software/ Other	0.055	
N Exterior Wall	Nonresidential/ Relocatable 1 CZ: New	JA4 Tables	Exterior wall	Metal 16" OC 2x8	19	12	U-factor	0.055	per JA4		265
									per Software/ Other	0.055	
E Exterior Wall	Nonresidential/ Relocatable 1 CZ: New	JA4 Tables	Exterior wall	Metal 16" OC 2x8	19	12	U-factor	0.055	per JA4		69
									per Software/ Other	0.055	

MARK	DATE	DESCRIPTION
A	11/13/2025	DSA BACKCHECK

TETER, INC.
FRESNO HEADQUARTERS
VISALIA | BAKERSFIELD | MODESTO | SAN LUIS OBISPO
ARCHITECTS ENGINEERS CONNECTED

VISALIA CAMPUS UNIVERSITY CENTER
COLLEGE OF THE SEQUOIAS
915 S. MOONEY BLVD
VISALIA, CALIFORNIA

DRAWING TITLE
TITLE 24 DOCUMENTATION

PROJECT NO.
22-12498

DRAWING
M901.2

PLOT DATE: 8/19/2025 10:19:21 PM

\\tet-file1\Users\zachary.davis_TETR\Documents\12498-M-UC_zachary.davis@WYRV.rvt
1/8" 1/0" 1'
PLOT DATE: 8/19/2025 10:19:41 PM

IDENTIFICATION STAMP
DIV. OF THE STATE ARCHITECT
APP: 02-122821 INC: 2
REVIEWED FOR
SS ☑ FLS ☑ ACS ☑
DATE: 11/20/2025

Teter, Inc. expressly reserves its common law copyright and other property rights in these plans. This document, the ideas and designs incorporated herein, as an instrument of professional service, is not to be used in whole or part, for any other project without prior written authorization.

MARK	DATE	DESCRIPTION
A.	11/13/2025	DSA BACKCHECK

STATE OF CALIFORNIA
Envelope Component Approach CALIFORNIA ENERGY COMMISSION

CERTIFICATE OF COMPLIANCE	NRCC-ENV-E
Project Name: COS Visalia - University Center	**Report Page:** (Page 19 of 42)
	Date Prepared: 2/4/2025

H. WALL ASSEMBLY SCHEDULE

03	04	05	06	07	08	09	10	11	12		13
Tag/Plan Detail ID	Occupancy & Status	How Design U-factor was determined	Location/ Fire Rating	Frame Material, Spacing & Depth	Cavity Insulation per Design	Continuous Insulation per Design	Thermal Performance Unit	Required Thermal Performance	U-factor per Design		Net Area[3] ft²
N Exterior Wall 35'5x18'-6"	Nonresidential/ Relocatable 1 CZ: New	JA4 Tables	Exterior wall	Metal 16" OC 2x8	19	12	U-factor	0.055	per JA4		577
									per Software/ Other	0.055	
E Exterior Wall 36'6x19'	Nonresidential/ Relocatable 1 CZ: New	JA4 Tables	Exterior wall	Metal 16" OC 2x8	19	12	U-factor	0.055	per JA4		694
									per Software/ Other	0.055	
S Exterior Wall 10'x19'6	Nonresidential/ Relocatable 1 CZ: New	JA4 Tables	Exterior wall	Metal 16" OC 2x8	19	12	U-factor	0.055	per JA4		195
									per Software/ Other	0.055	
S Exterior Wall	Nonresidential/ Relocatable 1 CZ: New	JA4 Tables	Exterior wall	Metal 16" OC 2x8	19	12	U-factor	0.055	per JA4		452
									per Software/ Other	0.055	
S Exterior Wall 30'-8"x18'-6"	Nonresidential/ Relocatable 1 CZ: New	JA4 Tables	Exterior wall	Metal 16" OC 2x8	19	12	U-factor	0.055	per JA4		504
									per Software/ Other	0.055	
S Exterior Wall 30'-6"x18'-6"	Nonresidential/ Relocatable 1 CZ: New	JA4 Tables	Exterior wall	Metal 16" OC 2x8	19	12	U-factor	0.055	per JA4		498.9
									per Software/ Other	0.055	

Generated Date/Time: Documentation Software: EnergyPro
CA Building Energy Efficiency Standards - 2022 Nonresidential Compliance — Report Version: 2022.0.000 Schema Version: rev 20220101 — Compliance ID: EnergyPro-4886-0225-0810 Report Generated: 2025-02-04 02:13:38

STATE OF CALIFORNIA
Envelope Component Approach CALIFORNIA ENERGY COMMISSION

CERTIFICATE OF COMPLIANCE	NRCC-ENV-E
Project Name: COS Visalia - University Center	**Report Page:** (Page 20 of 42)
	Date Prepared: 2/4/2025

H. WALL ASSEMBLY SCHEDULE

03	04	05	06	07	08	09	10	11	12		13
Tag/Plan Detail ID	Occupancy & Status	How Design U-factor was determined	Location/ Fire Rating	Frame Material, Spacing & Depth	Cavity Insulation per Design	Continuous Insulation per Design	Thermal Performance Unit	Required Thermal Performance	U-factor per Design		Net Area[3] ft²
S Exterior Wall 36'-8"x18'-6"	Nonresidential/ Relocatable 1 CZ: New	JA4 Tables	Exterior wall	Metal 16" OC 2x8	19	12	U-factor	0.055	per JA4		576.2
									per Software/ Other	0.055	
E Exterior Wall 37'-8"x19'	Nonresidential/ Relocatable 1 CZ: New	JA4 Tables	Exterior wall	Metal 16" OC 2x8	19	12	U-factor	0.055	per JA4		716
									per Software/ Other	0.055	
N Exterior Wall 13'x19'8"	Nonresidential/ Relocatable 1 CZ: New	JA4 Tables	Exterior wall	Metal 16" OC 2x8	19	12	U-factor	0.055	per JA4		256
									per Software/ Other	0.055	
E Exterior Wall 29'8"x20'	Nonresidential/ Relocatable 1 CZ: New	JA4 Tables	Exterior wall	Metal 16" OC 2x8	19	12	U-factor	0.055	per JA4		364
									per Software/ Other	0.055	
SE Exterior Wall 17'-6"x6'	Nonresidential/ Relocatable 1 CZ: New	JA4 Tables	Exterior wall	Metal 16" OC 2x8	19	12	U-factor	0.055	per JA4		57
									per Software/ Other	0.055	
S Exterior Wall 17'-6"x6'	Nonresidential/ Relocatable 1 CZ: New	JA4 Tables	Exterior wall	Metal 16" OC 2x8	19	12	U-factor	0.055	per JA4		105
									per Software/ Other	0.055	

Generated Date/Time: Documentation Software: EnergyPro
CA Building Energy Efficiency Standards - 2022 Nonresidential Compliance — Report Version: 2022.0.000 Schema Version: rev 20220101 — Compliance ID: EnergyPro-4886-0225-0810 Report Generated: 2025-02-04 02:13:38

STATE OF CALIFORNIA
Envelope Component Approach CALIFORNIA ENERGY COMMISSION

CERTIFICATE OF COMPLIANCE	NRCC-ENV-E
Project Name: COS Visalia - University Center	**Report Page:** (Page 21 of 42)
	Date Prepared: 2/4/2025

H. WALL ASSEMBLY SCHEDULE

03	04	05	06	07	08	09	10	11	12		13
Tag/Plan Detail ID	Occupancy & Status	How Design U-factor was determined	Location/ Fire Rating	Frame Material, Spacing & Depth	Cavity Insulation per Design	Continuous Insulation per Design	Thermal Performance Unit	Required Thermal Performance	U-factor per Design		Net Area[3] ft²
Exterior Wall	Nonresidential/ Relocatable 1 CZ: New	JA4 Tables	Exterior wall	Metal 16" OC 2x8	19	12	U-factor	0.055	per JA4		198
									per Software/ Other	0.055	

[1] *FOOTNOTES: If any individual assembly is non-compliant, assemblies may show compliance using an area-weighted calculation. Metal framed walls may not be combined with other wall types. Wood framed walls are combined with SIPS, spandrel & curtain, metal panel and straw bale wall types. The area-weighted compliance option is not available for alterations demonstrating compliance with R-values in Table 141.0-C.*
[2] *If "R-value" is shown in cell 10 as the Thermal Performance Unit, the R-value shown here is for cavity insulation per 141.0(b)1B.*
[3] *Wall area minus any fenestration area*

Area-Weighted Average U-factor Compliance Calculation for Metal Framed Walls

01	02	03		04	05
Wall Type	Total Area of Wall Type (ft²)	Area-weighted U-factor for Wall Type			Compliance Results Using Area-Weighted Calculation Option
		Required		Designed	
Metal Framed	19482.3	0.055		0.055	COMPLIES

I. FLOOR ASSEMBLY SCHEDULE

This table demonstrates compliance with prescriptive floor assembly requirements in 140.3(a)4/ 170.2(a)5 for new construction, 141.0(a)/ 180.1 for additions, or mandatory floor assembly requirements in 141.0(b)1C/ 180.2 for alterations.

01	Indicate floor types included in the project:[1]	☐ Framed	☐ SIPS (new only)	☒ Raised Mass	☐ Heated Slab-on-grade (new only)

[1] *FOOTNOTES: Floor types indicated above as "(new only)" do not have Title 24, Part 6 requirements for alterations. New construction and additions do have requirements and should be clicked above and compliance demonstrated within this table.*

Generated Date/Time: Documentation Software: EnergyPro
CA Building Energy Efficiency Standards - 2022 Nonresidential Compliance — Report Version: 2022.0.000 Schema Version: rev 20220101 — Compliance ID: EnergyPro-4886-0225-0810 Report Generated: 2025-02-04 02:13:38

STATE OF CALIFORNIA
Envelope Component Approach CALIFORNIA ENERGY COMMISSION

CERTIFICATE OF COMPLIANCE	NRCC-ENV-E
Project Name: COS Visalia - University Center	**Report Page:** (Page 22 of 42)
	Date Prepared: 2/4/2025

I. FLOOR ASSEMBLY SCHEDULE

Raised Mass Floors

01	☒	Calculate Area-Weighted Average U-factor for Raised Mass Floors[1]							
02	03	04	05	06	07	08	09	10	11
Tag/Plan Detail ID	Name/Description	Occupancy & Status	How Design U-factor was determined	Insulation Location	Continuous Insulation per Design	Thermal Performance Unit	Required Thermal Performance[2]	U-factor per Design	Area ft²
Raised Floor	Conc Floor Deck	Nonresidential / Relocatable 1 CZ: New	Approved Software		19	U-factor	0.092	per JA4 0.044	125
								per Software / Other	
Raised Floor	Conc Floor Deck	Nonresidential / Relocatable 1 CZ: New	Approved Software		19	U-factor	0.092	per JA4 0.044	44
								per Software / Other	
Raised Floor	Conc Floor Deck	Nonresidential / Relocatable 1 CZ: New	Approved Software		19	U-factor	0.092	per JA4 0.044	335
								per Software / Other	

[1] *FOOTNOTES: If any individual assembly is non-compliant, assemblies may show compliance using an area-weighted calculation. Raised Mass floors may not be combined with other floor types. The area-weighted compliance option is not available for alterations demonstrating compliance with R-values in 141.0(b)1C2 for high-rise residential and hotel/ motel occupancies.*
[2] *If "R-value" is shown in cell 08 as the Thermal Performance Unit, the R-value shown here is for continuous insulation per 141.0(b)1C2.*

Area-Weighted Average U-factor Compliance Calculation for Raised Mass Floors

01	02	03		04	05
Floor Type	Total Area of Floor Type (ft²)	Area-weighted U-factor for Floor Type			Compliance Results Using Area-Weighted Calculation Option
		Required		Designed	
Raised Mass	504	0.092		0.044	COMPLIES

Generated Date/Time: Documentation Software: EnergyPro
CA Building Energy Efficiency Standards - 2022 Nonresidential Compliance — Report Version: 2022.0.000 Schema Version: rev 20220101 — Compliance ID: EnergyPro-4886-0225-0810 Report Generated: 2025-02-04 02:13:38

STATE OF CALIFORNIA
Envelope Component Approach CALIFORNIA ENERGY COMMISSION

CERTIFICATE OF COMPLIANCE	NRCC-ENV-E
Project Name: COS Visalia - University Center	**Report Page:** (Page 23 of 42)
	Date Prepared: 2/4/2025

J. EXTERIOR DOOR SCHEDULE

This table demonstrates compliance with prescriptive exterior door requirements in 140.3(a)7/ 170.2(a)4 for new construction or additions. Doors which are being replaced (alterations) do not need to be documented in this table because there are no Title 24, Part 6 requirements that apply. Exterior doors separate conditioned space from unconditioned space or from ambient air. Doors that are more than 25% glass in area are considered Glazed Doors and should be documented on Table K with fenestration per Table 8.

01	02	03	04	05	06	07	
Tag/Plan Detail ID	Name/Description	Occupancy Type	Door Type	Door Insulation	Maximum Allowed U-factor	U-factor per Design	
	Metal Door	Nonresidential	Swinging	Any other wood door	0.7	per JA4	0.7

K. FENESTRATION AND GLAZED DOOR SCHEDULE

This table demonstrates compliance with prescriptive fenestration requirements in 140.3(a)5/ 170.2(a)3 for new constructions, 141.0(a)/ 180.1 for additions, or 141.0(b)2A/ 180.2 for alterations. Exterior doors that are more than 25% glass in area are considered Glazed Doors and should be documented on this table with fenestration.

01	Indicate fenestration types included in the project:[1]	☐ Vertical (alterations)	☒ Vertical (new)	☒ Skylights	☐ Glazed Doors (new only)

[1] *FOOTNOTES: Fenestration types indicated above as "(new only)" do not have Title 24, Part 6 requirements for alterations. New construction and additions do have requirements and should be clicked above and compliance demonstrated within this table.*

Vertical Fenestration and Glazed Doors- Total Building & West Facing Area (New Construction & Additions Only)

01	02	03	04	05
Elevation Item Tag/ Description	Orientation (Azimuth)[1]	Gross Exterior Wall Area[2] (ft²)	Display Perimeter Length[2] (ft)	Vertical Fenestration Area per Design[3] (ft²)
North	North Facing	9133	0	2899.8
East	East Facing	3974	0	380
South	South Facing	7503	0	777.9
West	West Facing	4870	0	1892

06	Maximum Allowed Vertical Fenestration (ft²)- All Orientations	10172.8	07	Total Vertical Fenestration (ft²) per design- All Orientations	5949.7
08	Maximum Allowed Vertical Fenestration (ft²)- West Facing	1948	09	Total Vertical Fenestration (ft²) per design- West Facing	1892

[1] *FOOTNOTES: Orientation between 226 deg and 315 deg are considered "West Facing". A diagram has been provided in the Nonresidential Compliance Manual for visual reference.*
[2] *Do not include demising walls per 140.3(a)5 .*
[3] *Includes glazed door fenestration area .*

Generated Date/Time: Documentation Software: EnergyPro
CA Building Energy Efficiency Standards - 2022 Nonresidential Compliance — Report Version: 2022.0.000 Schema Version: rev 20220101 — Compliance ID: EnergyPro-4886-0225-0810 Report Generated: 2025-02-04 02:13:38

STATE OF CALIFORNIA
Envelope Component Approach CALIFORNIA ENERGY COMMISSION

CERTIFICATE OF COMPLIANCE	NRCC-ENV-E
Project Name: COS Visalia - University Center	**Report Page:** (Page 24 of 42)
	Date Prepared: 2/4/2025

K. FENESTRATION AND GLAZED DOOR SCHEDULE

Vertical Fenestration And Glazed Doors- U-factor, Solar Heat Gain Coefficient (RSHGC/ SHGC), Visible Transmittance (VT)

01	☒	Calculate Area-Weighted Average U-factor for Vertical Fenestration and Glazed Doors[1]
02	☒	Calculate Area-Weighted Average (R)SHGC for Vertical Fenestration and Glazed Doors[1]
03	☒	Calculate Area-Weighted Average VT for Vertical Fenestration and Glazed Doors[1]

Vertical Fenestration And Glazed Doors- U-factor, Solar Heat Gain Coefficient (RSHGC/ SHGC), Visible Transmittance (VT)

04	05	06	07	08	09		10	11	12	13
Tag/Plan Detail ID	Fenestration Type	Occupancy & Status	U-factor/ (R)SHGC Compliance Method	VT Compliance Method	Calculation Method for Performance Values per Design[2]		Product Performance Unit	Required Product Performance	Product Performance per Design	Area ft²
Glass door A 14x7-8	Glazed door	Nonresidential/ Relocatable 1 CZ: : New			NFRC Certified		U-factor (max)	0.45	0.29	98
					☒	Overhang/ Slats used for RSHGC	(R)SHGC (max)	0.23	0.23	
							VT (min)	0.17	0.54	
Window A3 44'x24'	Fixed window	Nonresidential/ Relocatable 1 CZ: : New			NFRC Certified		U-factor (max)	0.34	0.29	1056
					☒	Overhang/ Slats used for RSHGC	(R)SHGC (max)	0.22	0.23	
							VT (min)	0.42	0.54	
Window A1 4x30	Fixed window	Nonresidential/ Relocatable 1 CZ: : New			NFRC Certified		U-factor (max)	0.34	0.29	120
					☒	Overhang/ Slats used for RSHGC	(R)SHGC (max)	0.22	0.23	
							VT (min)	0.42	0.54	
Glass door B 7x8	Glazed door	Nonresidential/ Relocatable 1 CZ: : New			NFRC Certified		U-factor (max)	0.45	0.29	56
					☐	Overhang/ Slats used for RSHGC	(R)SHGC (max)	0.23	0.23	
							VT (min)	0.17	0.54	
Window B2 57'-10"x25'	Fixed window	Nonresidential/ Relocatable 1 CZ: : New			NFRC Certified		U-factor (max)	0.34	0.29	1445
					☐	Overhang/ Slats used for RSHGC	(R)SHGC (max)	0.22	0.23	
							VT (min)	0.42	0.54	

Generated Date/Time: Documentation Software: EnergyPro
CA Building Energy Efficiency Standards - 2022 Nonresidential Compliance — Report Version: 2022.0.000 Schema Version: rev 20220101 — Compliance ID: EnergyPro-4886-0225-0810 Report Generated: 2025-02-04 02:13:38

STATE OF CALIFORNIA
Envelope Component Approach CALIFORNIA ENERGY COMMISSION

CERTIFICATE OF COMPLIANCE	NRCC-ENV-E
Project Name: COS Visalia - University Center	**Report Page:** (Page 25 of 42)
	Date Prepared: 2/4/2025

K. FENESTRATION AND GLAZED DOOR SCHEDULE

Vertical Fenestration And Glazed Doors- U-factor, Solar Heat Gain Coefficient (RSHGC/ SHGC), Visible Transmittance (VT)

04	05	06	07	08	09		10	11	12	13
Tag/Plan Detail ID	Fenestration Type	Occupancy & Status	U-factor/ (R)SHGC Compliance Method	VT Compliance Method	Calculation Method for Performance Values per Design[2]		Product Performance Unit	Required Product Performance	Product Performance per Design	Area ft²
Window B1 8'x26.6'	Fixed window	Nonresidential/ Relocatable 1 CZ: : New			NFRC Certified		U-factor (max)	0.34	0.29	212.8
					☐	Overhang/ Slats used for RSHGC	(R)SHGC (max)	0.22	0.23	
							VT (min)	0.42	0.54	
Window 17'5x13	Fixed window	Nonresidential/ Relocatable 1 CZ: : New			NFRC Certified		U-factor (max)	0.34	0.29	180
					☐	Overhang/ Slats used for RSHGC	(R)SHGC (max)	0.22	0.23	
							VT (min)	0.42	0.54	
Glass door 6'x8'	Glazed door	Nonresidential/ Relocatable 1 CZ: : New			NFRC Certified		U-factor (max)	0.45	0.29	48
					☐	Overhang/ Slats used for RSHGC	(R)SHGC (max)	0.23	0.23	
							VT (min)	0.17	0.54	
Window 15'8x13'	Fixed window	Nonresidential/ Relocatable 1 CZ: : New			NFRC Certified		U-factor (max)	0.34	0.29	205
					☐	Overhang/ Slats used for RSHGC	(R)SHGC (max)	0.22	0.23	
							VT (min)	0.42	0.54	
Window C 2'x12'	Fixed window	Nonresidential/ Relocatable 1 CZ: : New			NFRC Certified		U-factor (max)	0.34	0.29	24
					☐	Overhang/ Slats used for RSHGC	(R)SHGC (max)	0.22	0.23	
							VT (min)	0.42	0.54	
Window C 2'x12'	Fixed window	Nonresidential/ Relocatable 1 CZ: : New			NFRC Certified		U-factor (max)	0.34	0.29	24
					☐	Overhang/ Slats used for RSHGC	(R)SHGC (max)	0.22	0.23	
							VT (min)	0.42	0.54	

Generated Date/Time: Documentation Software: EnergyPro
CA Building Energy Efficiency Standards - 2022 Nonresidential Compliance — Report Version: 2022.0.000 Schema Version: rev 20220101 — Compliance ID: EnergyPro-4886-0225-0810 Report Generated: 2025-02-04 02:13:38

STATE OF CALIFORNIA
Envelope Component Approach CALIFORNIA ENERGY COMMISSION

CERTIFICATE OF COMPLIANCE	NRCC-ENV-E
Project Name: COS Visalia - University Center	**Report Page:** (Page 26 of 42)
	Date Prepared: 2/4/2025

K. FENESTRATION AND GLAZED DOOR SCHEDULE

Vertical Fenestration And Glazed Doors- U-factor, Solar Heat Gain Coefficient (RSHGC/ SHGC), Visible Transmittance (VT)

04	05	06	07	08	09		10	11	12	13
Tag/Plan Detail ID	Fenestration Type	Occupancy & Status	U-factor/ (R)SHGC Compliance Method	VT Compliance Method	Calculation Method for Performance Values per Design[2]		Product Performance Unit	Required Product Performance	Product Performance per Design	Area ft²
Window D 5'x12'	Fixed window	Nonresidential/ Relocatable 1 CZ: : New			NFRC Certified		U-factor (max)	0.34	0.29	60
					☐	Overhang/ Slats used for RSHGC	(R)SHGC (max)	0.22	0.23	
							VT (min)	0.42	0.54	
Window E 3'-6"x12'	Fixed window	Nonresidential/ Relocatable 1 CZ: : New			NFRC Certified		U-factor (max)	0.34	0.29	42
					☐	Overhang/ Slats used for RSHGC	(R)SHGC (max)	0.22	0.23	
							VT (min)	0.42	0.54	
Window F 5'x7'-6"	Fixed window	Nonresidential/ Relocatable 1 CZ: : New			NFRC Certified		U-factor (max)	0.34	0.29	38
					☐	Overhang/ Slats used for RSHGC	(R)SHGC (max)	0.22	0.23	
							VT (min)	0.42	0.54	
Window F 5'x7'-6"	Fixed window	Nonresidential/ Relocatable 1 CZ: : New			NFRC Certified		U-factor (max)	0.34	0.29	38
					☐	Overhang/ Slats used for RSHGC	(R)SHGC (max)	0.22	0.23	
							VT (min)	0.42	0.54	
Window F 5'x7'-6"	Fixed window	Nonresidential/ Relocatable 1 CZ: : New			NFRC Certified		U-factor (max)	0.34	0.29	38
					☐	Overhang/ Slats used for RSHGC	(R)SHGC (max)	0.22	0.23	
							VT (min)	0.42	0.54	
Window 6'x10'	Fixed window	Nonresidential/ Relocatable 1 CZ: : New			NFRC Certified		U-factor (max)	0.34	0.29	60
					☐	Overhang/ Slats used for RSHGC	(R)SHGC (max)	0.22	0.23	
							VT (min)	0.42	0.54	

Generated Date/Time: Documentation Software: EnergyPro
CA Building Energy Efficiency Standards - 2022 Nonresidential Compliance — Report Version: 2022.0.000 Schema Version: rev 20220101 — Compliance ID: EnergyPro-4886-0225-0810 Report Generated: 2025-02-04 02:13:38

STATE OF CALIFORNIA
Envelope Component Approach CALIFORNIA ENERGY COMMISSION

CERTIFICATE OF COMPLIANCE	NRCC-ENV-E
Project Name: COS Visalia - University Center	**Report Page:** (Page 27 of 42)
	Date Prepared: 2/4/2025

K. FENESTRATION AND GLAZED DOOR SCHEDULE

Vertical Fenestration And Glazed Doors- U-factor, Solar Heat Gain Coefficient (RSHGC/ SHGC), Visible Transmittance (VT)

04	05	06	07	08	09		10	11	12	13
Tag/Plan Detail ID	Fenestration Type	Occupancy & Status	U-factor/ (R)SHGC Compliance Method	VT Compliance Method	Calculation Method for Performance Values per Design[2]		Product Performance Unit	Required Product Performance	Product Performance per Design	Area ft²
Window 2'x7'-6"	Fixed window	Nonresidential/ Relocatable 1 CZ: : New			NFRC Certified		U-factor (max)	0.34	0.29	15
					☐	Overhang/ Slats used for RSHGC	(R)SHGC (max)	0.22	0.23	
							VT (min)	0.42	0.54	
Window 2'x7'-6"	Fixed window	Nonresidential/ Relocatable 1 CZ: : New			NFRC Certified		U-factor (max)	0.34	0.29	15
					☐	Overhang/ Slats used for RSHGC	(R)SHGC (max)	0.22	0.23	
							VT (min)	0.42	0.54	
Window 5'x7'-6"	Fixed window	Nonresidential/ Relocatable 1 CZ: : New			NFRC Certified		U-factor (max)	0.34	0.29	38
					☐	Overhang/ Slats used for RSHGC	(R)SHGC (max)	0.22	0.23	
							VT (min)	0.42	0.54	
Window 3'-6"x7'-6"	Fixed window	Nonresidential/ Relocatable 1 CZ: : New			NFRC Certified		U-factor (max)	0.34	0.29	27
					☐	Overhang/ Slats used for RSHGC	(R)SHGC (max)	0.22	0.23	
							VT (min)	0.42	0.54	
Window 5'x7'-6"	Fixed window	Nonresidential/ Relocatable 1 CZ: : New			NFRC Certified		U-factor (max)	0.34	0.29	38
					☐	Overhang/ Slats used for RSHGC	(R)SHGC (max)	0.22	0.23	
							VT (min)	0.42	0.54	
Window 5'x7'-6"	Fixed window	Nonresidential/ Relocatable 1 CZ: : New			NFRC Certified		U-factor (max)	0.34	0.29	38
					☐	Overhang/ Slats used for RSHGC	(R)SHGC (max)	0.22	0.23	
							VT (min)	0.42	0.54	

Generated Date/Time: Documentation Software: EnergyPro
CA Building Energy Efficiency Standards - 2022 Nonresidential Compliance — Report Version: 2022.0.000 Schema Version: rev 20220101 — Compliance ID: EnergyPro-4886-0225-0810 Report Generated: 2025-02-04 02:13:38

TETER, INC.
FRESNO HEADQUARTERS
VISALIA | BAKERSFIELD | MODESTO | SAN LUIS OBISPO
ARCHITECTS ENGINEERS CONNECTED

VISALIA CAMPUS UNIVERSITY CENTER
COLLEGE OF THE SEQUOIAS
915 S. MOONEY BLVD
VISALIA, CALIFORNIA

DRAWING TITLE
TITLE 24 DOCUMENTATION

PROJECT NO.
22-12498

DRAWING
M902.2

STATE OF CALIFORNIA

Envelope Component Approach

CALIFORNIA ENERGY COMMISSION

CERTIFICATE OF COMPLIANCE			NRCC-ENV-E
Project Name:	COS Visalia - University Center	**Report Page:**	(Page 28 of 42)
		Date Prepared:	2/4/2025

K. FENESTRATION AND GLAZED DOOR SCHEDULE

Vertical Fenestration And Glazed Doors- U-factor, Solar Heat Gain Coefficient (RSHGC/ SHGC), Visible Transmittance (VT)

04	05	06	07	08	09	10	11	12	13
Tag/Plan Detail ID	Fenestration Type	Occupancy & Status	U-factor/ (R)SHGC Compliance Method	VT Compliance Method	Calculation Method for Performance Values per Design[2]	Product Performance Unit	Required Product Performance	Product Performance per Design	Area ft^2
Window L 5'x13'-5	Fixed window	Nonresidential/ Relocatable 1 CZ: : New			NFRC Certified	U-factor (max)	0.34	0.29	67
					☐ Overhang/ Slats used for RSHGC	(R)SHGC (max)	0.22	0.23	
						VT (min)	0.42	0.54	
Glass door 6'x8'	Glazed door	Nonresidential/ Relocatable 1 CZ: : New			NFRC Certified	U-factor (max)	0.45	0.29	48
					☐ Overhang/ Slats used for RSHGC	(R)SHGC (max)	0.23	0.23	
						VT (min)	0.17	0.54	
Window 6'x5'-6"	Fixed window	Nonresidential/ Relocatable 1 CZ: : New			NFRC Certified	U-factor (max)	0.34	0.29	33
					☐ Overhang/ Slats used for RSHGC	(R)SHGC (max)	0.22	0.23	
						VT (min)	0.42	0.54	
Window R 5'x7'	Fixed window	Nonresidential/ Relocatable 1 CZ: : New			NFRC Certified	U-factor (max)	0.34	0.29	35
					☐ Overhang/ Slats used for RSHGC	(R)SHGC (max)	0.22	0.23	
						VT (min)	0.42	0.54	
Window Q 3'-6"x7'	Fixed window	Nonresidential/ Relocatable 1 CZ: : New			NFRC Certified	U-factor (max)	0.34	0.29	25
					☐ Overhang/ Slats used for RSHGC	(R)SHGC (max)	0.22	0.23	
						VT (min)	0.42	0.54	
Window S 2'x7'	Fixed window	Nonresidential/ Relocatable 1 CZ: : New			NFRC Certified	U-factor (max)	0.34	0.29	14
					☐ Overhang/ Slats used for RSHGC	(R)SHGC (max)	0.22	0.23	
						VT (min)	0.42	0.54	

Generated Date/Time: Documentation Software: EnergyPro

CA Building Energy Efficiency Standards - 2022 Nonresidential Compliance
Report Version: 2022.0.000
Schema Version: rev 20220101
Compliance ID: EnergyPro-4886-0225-0810
Report Generated: 2025-02-04 02:13:38

STATE OF CALIFORNIA

Envelope Component Approach

CALIFORNIA ENERGY COMMISSION

CERTIFICATE OF COMPLIANCE			NRCC-ENV-E
Project Name:	COS Visalia - University Center	**Report Page:**	(Page 29 of 42)
		Date Prepared:	2/4/2025

K. FENESTRATION AND GLAZED DOOR SCHEDULE

Vertical Fenestration And Glazed Doors- U-factor, Solar Heat Gain Coefficient (RSHGC/ SHGC), Visible Transmittance (VT)

04	05	06	07	08	09	10	11	12	13
Tag/Plan Detail ID	Fenestration Type	Occupancy & Status	U-factor/ (R)SHGC Compliance Method	VT Compliance Method	Calculation Method for Performance Values per Design[2]	Product Performance Unit	Required Product Performance	Product Performance per Design	Area ft^2
Window S 2'x7'	Fixed window	Nonresidential/ Relocatable 1 CZ: : New			NFRC Certified	U-factor (max)	0.34	0.29	14
					☐ Overhang/ Slats used for RSHGC	(R)SHGC (max)	0.22	0.23	
						VT (min)	0.42	0.54	
Window R 5'x7'	Fixed window	Nonresidential/ Relocatable 1 CZ: : New			NFRC Certified	U-factor (max)	0.34	0.29	35
					☐ Overhang/ Slats used for RSHGC	(R)SHGC (max)	0.22	0.23	
						VT (min)	0.42	0.54	
Window Q 3'-6"x7'	Fixed window	Nonresidential/ Relocatable 1 CZ: : New			NFRC Certified	U-factor (max)	0.34	0.29	25
					☐ Overhang/ Slats used for RSHGC	(R)SHGC (max)	0.22	0.23	
						VT (min)	0.42	0.54	
Window N 5'x7'	Fixed window	Nonresidential/ Relocatable 1 CZ: : New			NFRC Certified	U-factor (max)	0.34	0.29	35
					☐ Overhang/ Slats used for RSHGC	(R)SHGC (max)	0.22	0.23	
						VT (min)	0.42	0.54	
Window O 2'x7'	Fixed window	Nonresidential/ Relocatable 1 CZ: : New			NFRC Certified	U-factor (max)	0.34	0.29	14
					☐ Overhang/ Slats used for RSHGC	(R)SHGC (max)	0.22	0.23	
						VT (min)	0.42	0.54	
Window O 2'x7'	Fixed window	Nonresidential/ Relocatable 1 CZ: : New			NFRC Certified	U-factor (max)	0.34	0.29	14
					☐ Overhang/ Slats used for RSHGC	(R)SHGC (max)	0.22	0.23	
						VT (min)	0.42	0.54	

Generated Date/Time: Documentation Software: EnergyPro

CA Building Energy Efficiency Standards - 2022 Nonresidential Compliance
Report Version: 2022.0.000
Schema Version: rev 20220101
Compliance ID: EnergyPro-4886-0225-0810
Report Generated: 2025-02-04 02:13:38

STATE OF CALIFORNIA

Envelope Component Approach

CALIFORNIA ENERGY COMMISSION

CERTIFICATE OF COMPLIANCE			NRCC-ENV-E
Project Name:	COS Visalia - University Center	**Report Page:**	(Page 30 of 42)
		Date Prepared:	2/4/2025

K. FENESTRATION AND GLAZED DOOR SCHEDULE

Vertical Fenestration And Glazed Doors- U-factor, Solar Heat Gain Coefficient (RSHGC/ SHGC), Visible Transmittance (VT)

04	05	06	07	08	09	10	11	12	13
Tag/Plan Detail ID	Fenestration Type	Occupancy & Status	U-factor/ (R)SHGC Compliance Method	VT Compliance Method	Calculation Method for Performance Values per Design[2]	Product Performance Unit	Required Product Performance	Product Performance per Design	Area ft^2
Window P 3'-6"x7'	Fixed window	Nonresidential/ Relocatable 1 CZ: : New			NFRC Certified	U-factor (max)	0.34	0.29	25
					☐ Overhang/ Slats used for RSHGC	(R)SHGC (max)	0.22	0.23	
						VT (min)	0.42	0.54	
Window O 2'x7'	Fixed window	Nonresidential/ Relocatable 1 CZ: : New			NFRC Certified	U-factor (max)	0.34	0.29	14
					☐ Overhang/ Slats used for RSHGC	(R)SHGC (max)	0.22	0.23	
						VT (min)	0.42	0.54	
Window O 2'x7'	Fixed window	Nonresidential/ Relocatable 1 CZ: : New			NFRC Certified	U-factor (max)	0.34	0.29	14
					☐ Overhang/ Slats used for RSHGC	(R)SHGC (max)	0.22	0.23	
						VT (min)	0.42	0.54	
Window N 5'x7'	Fixed window	Nonresidential/ Relocatable 1 CZ: : New			NFRC Certified	U-factor (max)	0.34	0.29	35
					☐ Overhang/ Slats used for RSHGC	(R)SHGC (max)	0.22	0.23	
						VT (min)	0.42	0.54	
Window 4-11x5	Fixed window	Nonresidential/ Relocatable 1 CZ: : New			NFRC Certified	U-factor (max)	0.34	0.29	44
					☐ Overhang/ Slats used for RSHGC	(R)SHGC (max)	0.22	0.23	
						VT (min)	0.42	0.54	
Window 8-10x5	Fixed window	Nonresidential/ Relocatable 1 CZ: : New			NFRC Certified	U-factor (max)	0.34	0.29	74
					☐ Overhang/ Slats used for RSHGC	(R)SHGC (max)	0.22	0.23	
						VT (min)	0.42	0.54	

Generated Date/Time: Documentation Software: EnergyPro

CA Building Energy Efficiency Standards - 2022 Nonresidential Compliance
Report Version: 2022.0.000
Schema Version: rev 20220101
Compliance ID: EnergyPro-4886-0225-0810
Report Generated: 2025-02-04 02:13:38

STATE OF CALIFORNIA

Envelope Component Approach

CALIFORNIA ENERGY COMMISSION

CERTIFICATE OF COMPLIANCE			NRCC-ENV-E
Project Name:	COS Visalia - University Center	**Report Page:**	(Page 31 of 42)
		Date Prepared:	2/4/2025

K. FENESTRATION AND GLAZED DOOR SCHEDULE

Vertical Fenestration And Glazed Doors- U-factor, Solar Heat Gain Coefficient (RSHGC/ SHGC), Visible Transmittance (VT)

04	05	06	07	08	09	10	11	12	13
Tag/Plan Detail ID	Fenestration Type	Occupancy & Status	U-factor/ (R)SHGC Compliance Method	VT Compliance Method	Calculation Method for Performance Values per Design[2]	Product Performance Unit	Required Product Performance	Product Performance per Design	Area ft^2
Window 4-11x5	Fixed window	Nonresidential/ Relocatable 1 CZ: : New			NFRC Certified	U-factor (max)	0.34	0.29	44
					☐ Overhang/ Slats used for RSHGC	(R)SHGC (max)	0.22	0.23	
						VT (min)	0.42	0.54	
Window AE 5'x7	Fixed window	Nonresidential/ Relocatable 1 CZ: : New			NFRC Certified	U-factor (max)	0.34	0.29	35
					☐ Overhang/ Slats used for RSHGC	(R)SHGC (max)	0.22	0.23	
						VT (min)	0.42	0.54	
Window AF 2'x7	Fixed window	Nonresidential/ Relocatable 1 CZ: : New			NFRC Certified	U-factor (max)	0.34	0.29	14
					☐ Overhang/ Slats used for RSHGC	(R)SHGC (max)	0.22	0.23	
						VT (min)	0.42	0.54	
Window AE 5'x7	Fixed window	Nonresidential/ Relocatable 1 CZ: : New			NFRC Certified	U-factor (max)	0.34	0.29	35
					☐ Overhang/ Slats used for RSHGC	(R)SHGC (max)	0.22	0.23	
						VT (min)	0.42	0.54	
Window AC 2'x7'-6"	Fixed window	Nonresidential/ Relocatable 1 CZ: : New			NFRC Certified	U-factor (max)	0.34	0.29	15
					☐ Overhang/ Slats used for RSHGC	(R)SHGC (max)	0.22	0.23	
						VT (min)	0.42	0.54	
Window AB 5'x7-6"'	Fixed window	Nonresidential/ Relocatable 1 CZ: : New			NFRC Certified	U-factor (max)	0.34	0.29	37
					☐ Overhang/ Slats used for RSHGC	(R)SHGC (max)	0.22	0.23	
						VT (min)	0.42	0.54	

Generated Date/Time: Documentation Software: EnergyPro

CA Building Energy Efficiency Standards - 2022 Nonresidential Compliance
Report Version: 2022.0.000
Schema Version: rev 20220101
Compliance ID: EnergyPro-4886-0225-0810
Report Generated: 2025-02-04 02:13:38

STATE OF CALIFORNIA

Envelope Component Approach

CALIFORNIA ENERGY COMMISSION

CERTIFICATE OF COMPLIANCE			NRCC-ENV-E
Project Name:	COS Visalia - University Center	**Report Page:**	(Page 32 of 42)
		Date Prepared:	2/4/2025

K. FENESTRATION AND GLAZED DOOR SCHEDULE

Vertical Fenestration And Glazed Doors- U-factor, Solar Heat Gain Coefficient (RSHGC/ SHGC), Visible Transmittance (VT)

04	05	06	07	08	09	10	11	12	13
Tag/Plan Detail ID	Fenestration Type	Occupancy & Status	U-factor/ (R)SHGC Compliance Method	VT Compliance Method	Calculation Method for Performance Values per Design[2]	Product Performance Unit	Required Product Performance	Product Performance per Design	Area ft^2
Window AB 5'x7-6"'	Fixed window	Nonresidential/ Relocatable 1 CZ: : New			NFRC Certified	U-factor (max)	0.34	0.29	37
					☐ Overhang/ Slats used for RSHGC	(R)SHGC (max)	0.22	0.23	
						VT (min)	0.42	0.54	
Window AC 2'x7'	Fixed window	Nonresidential/ Relocatable 1 CZ: : New			NFRC Certified	U-factor (max)	0.34	0.29	14
					☐ Overhang/ Slats used for RSHGC	(R)SHGC (max)	0.22	0.23	
						VT (min)	0.42	0.54	
Window AA 3'-6"x7	Fixed window	Nonresidential/ Relocatable 1 CZ: : New			NFRC Certified	U-factor (max)	0.34	0.29	24
					☐ Overhang/ Slats used for RSHGC	(R)SHGC (max)	0.22	0.23	
						VT (min)	0.42	0.54	
Window AA 3'-6"x7	Fixed window	Nonresidential/ Relocatable 1 CZ: : New			NFRC Certified	U-factor (max)	0.34	0.29	24
					☐ Overhang/ Slats used for RSHGC	(R)SHGC (max)	0.22	0.23	
						VT (min)	0.42	0.54	
Window AB 5'x7	Fixed window	Nonresidential/ Relocatable 1 CZ: : New			NFRC Certified	U-factor (max)	0.34	0.29	35
					☐ Overhang/ Slats used for RSHGC	(R)SHGC (max)	0.22	0.23	
						VT (min)	0.42	0.54	
Window AB 5'x7-6"'	Fixed window	Nonresidential/ Relocatable 1 CZ: : New			NFRC Certified	U-factor (max)	0.34	0.29	37
					☐ Overhang/ Slats used for RSHGC	(R)SHGC (max)	0.22	0.23	
						VT (min)	0.42	0.54	

Generated Date/Time: Documentation Software: EnergyPro

CA Building Energy Efficiency Standards - 2022 Nonresidential Compliance
Report Version: 2022.0.000
Schema Version: rev 20220101
Compliance ID: EnergyPro-4886-0225-0810
Report Generated: 2025-02-04 02:13:38

STATE OF CALIFORNIA

Envelope Component Approach

CALIFORNIA ENERGY COMMISSION

CERTIFICATE OF COMPLIANCE			NRCC-ENV-E
Project Name:	COS Visalia - University Center	**Report Page:**	(Page 33 of 42)
		Date Prepared:	2/4/2025

K. FENESTRATION AND GLAZED DOOR SCHEDULE

Vertical Fenestration And Glazed Doors- U-factor, Solar Heat Gain Coefficient (RSHGC/ SHGC), Visible Transmittance (VT)

04	05	06	07	08	09	10	11	12	13
Tag/Plan Detail ID	Fenestration Type	Occupancy & Status	U-factor/ (R)SHGC Compliance Method	VT Compliance Method	Calculation Method for Performance Values per Design[2]	Product Performance Unit	Required Product Performance	Product Performance per Design	Area ft^2
Window AA 3'-6"x7'-6"	Fixed window	Nonresidential/ Relocatable 1 CZ: : New			NFRC Certified	U-factor (max)	0.34	0.29	26
					☐ Overhang/ Slats used for RSHGC	(R)SHGC (max)	0.22	0.23	
						VT (min)	0.42	0.54	
Window 7x10	Fixed window	Nonresidential/ Relocatable 1 CZ: : New			NFRC Certified	U-factor (max)	0.34	0.29	70
					☐ Overhang/ Slats used for RSHGC	(R)SHGC (max)	0.22	0.23	
						VT (min)	0.42	0.54	
Window C 2'x8'	Fixed window	Nonresidential/ Relocatable 1 CZ: : New			NFRC Certified	U-factor (max)	0.34	0.29	16
					☐ Overhang/ Slats used for RSHGC	(R)SHGC (max)	0.22	0.23	
						VT (min)	0.42	0.54	
Window C 2'x8	Fixed window	Nonresidential/ Relocatable 1 CZ: : New			NFRC Certified	U-factor (max)	0.34	0.29	16
					☐ Overhang/ Slats used for RSHGC	(R)SHGC (max)	0.22	0.23	
						VT (min)	0.42	0.54	
Window D 5'x8	Fixed window	Nonresidential/ Relocatable 1 CZ: : New			NFRC Certified	U-factor (max)	0.34	0.29	40
					☐ Overhang/ Slats used for RSHGC	(R)SHGC (max)	0.22	0.23	
						VT (min)	0.42	0.54	
Window E 3'-6x8	Fixed window	Nonresidential/ Relocatable 1 CZ: : New			NFRC Certified	U-factor (max)	0.34	0.29	28
					☐ Overhang/ Slats used for RSHGC	(R)SHGC (max)	0.22	0.23	
						VT (min)	0.42	0.54	

Generated Date/Time: Documentation Software: EnergyPro

CA Building Energy Efficiency Standards - 2022 Nonresidential Compliance
Report Version: 2022.0.000
Schema Version: rev 20220101
Compliance ID: EnergyPro-4886-0225-0810
Report Generated: 2025-02-04 02:13:38

STATE OF CALIFORNIA

Envelope Component Approach

CALIFORNIA ENERGY COMMISSION

CERTIFICATE OF COMPLIANCE			NRCC-ENV-E
Project Name:	COS Visalia - University Center	**Report Page:**	(Page 34 of 42)
		Date Prepared:	2/4/2025

K. FENESTRATION AND GLAZED DOOR SCHEDULE

Vertical Fenestration And Glazed Doors- U-factor, Solar Heat Gain Coefficient (RSHGC/ SHGC), Visible Transmittance (VT)

04	05	06	07	08	09	10	11	12	13
Tag/Plan Detail ID	Fenestration Type	Occupancy & Status	U-factor/ (R)SHGC Compliance Method	VT Compliance Method	Calculation Method for Performance Values per Design[2]	Product Performance Unit	Required Product Performance	Product Performance per Design	Area ft^2
Window F 5'x8'3	Fixed window	Nonresidential/ Relocatable 1 CZ: : New			NFRC Certified	U-factor (max)	0.34	0.29	41
					☐ Overhang/ Slats used for RSHGC	(R)SHGC (max)	0.22	0.23	
						VT (min)	0.42	0.54	
Window F 5'x8'3	Fixed window	Nonresidential/ Relocatable 1 CZ: : New			NFRC Certified	U-factor (max)	0.34	0.29	41
					☐ Overhang/ Slats used for RSHGC	(R)SHGC (max)	0.22	0.23	
						VT (min)	0.42	0.54	
Window F 5'x8'3	Fixed window	Nonresidential/ Relocatable 1 CZ: : New			NFRC Certified	U-factor (max)	0.34	0.29	41
					☐ Overhang/ Slats used for RSHGC	(R)SHGC (max)	0.22	0.23	
						VT (min)	0.42	0.54	
Window H 2'x8'	Fixed window	Nonresidential/ Relocatable 1 CZ: : New			NFRC Certified	U-factor (max)	0.34	0.29	16
					☐ Overhang/ Slats used for RSHGC	(R)SHGC (max)	0.22	0.23	
						VT (min)	0.42	0.54	
Window H 2'x8'	Fixed window	Nonresidential/ Relocatable 1 CZ: : New			NFRC Certified	U-factor (max)	0.34	0.29	16
					☐ Overhang/ Slats used for RSHGC	(R)SHGC (max)	0.22	0.23	
						VT (min)	0.42	0.54	
Window J 5'x8'	Fixed window	Nonresidential/ Relocatable 1 CZ: : New			NFRC Certified	U-factor (max)	0.34	0.29	40
					☐ Overhang/ Slats used for RSHGC	(R)SHGC (max)	0.22	0.23	
						VT (min)	0.42	0.54	

Generated Date/Time: Documentation Software: EnergyPro

CA Building Energy Efficiency Standards - 2022 Nonresidential Compliance
Report Version: 2022.0.000
Schema Version: rev 20220101
Compliance ID: EnergyPro-4886-0225-0810
Report Generated: 2025-02-04 02:13:38

STATE OF CALIFORNIA

Envelope Component Approach

CALIFORNIA ENERGY COMMISSION

CERTIFICATE OF COMPLIANCE			NRCC-ENV-E
Project Name:	COS Visalia - University Center	**Report Page:**	(Page 35 of 42)
		Date Prepared:	2/4/2025

K. FENESTRATION AND GLAZED DOOR SCHEDULE

Vertical Fenestration And Glazed Doors- U-factor, Solar Heat Gain Coefficient (RSHGC/ SHGC), Visible Transmittance (VT)

04	05	06	07	08	09	10	11	12	13
Tag/Plan Detail ID	Fenestration Type	Occupancy & Status	U-factor/ (R)SHGC Compliance Method	VT Compliance Method	Calculation Method for Performance Values per Design[2]	Product Performance Unit	Required Product Performance	Product Performance per Design	Area ft^2
Window K 3'-6"x8'	Fixed window	Nonresidential/ Relocatable 1 CZ: : New			NFRC Certified	U-factor (max)	0.34	0.29	28
					☐ Overhang/ Slats used for RSHGC	(R)SHGC (max)	0.22	0.23	
						VT (min)	0.42	0.54	
Window 6'x10'	Fixed window	Nonresidential/ Relocatable 1 CZ: : New			NFRC Certified	U-factor (max)	0.34	0.29	60
					☐ Overhang/ Slats used for RSHGC	(R)SHGC (max)	0.22	0.23	
						VT (min)	0.42	0.54	
Window J 5'x8'	Fixed window	Nonresidential/ Relocatable 1 CZ: : New			NFRC Certified	U-factor (max)	0.34	0.29	40
					☐ Overhang/ Slats used for RSHGC	(R)SHGC (max)	0.22	0.23	
						VT (min)	0.42	0.54	
Window J 5'x8'	Fixed window	Nonresidential/ Relocatable 1 CZ: : New			NFRC Certified	U-factor (max)	0.34	0.29	40
					☐ Overhang/ Slats used for RSHGC	(R)SHGC (max)	0.22	0.23	
						VT (min)	0.42	0.54	
Window S 2'x7'-3"	Fixed window	Nonresidential/ Relocatable 1 CZ: : New			NFRC Certified	U-factor (max)	0.34	0.29	15
					☐ Overhang/ Slats used for RSHGC	(R)SHGC (max)	0.22	0.23	
						VT (min)	0.42	0.54	
Window S 2'x7'-3"	Fixed window	Nonresidential/ Relocatable 1 CZ: : New			NFRC Certified	U-factor (max)	0.34	0.29	15
					☐ Overhang/ Slats used for RSHGC	(R)SHGC (max)	0.22	0.23	
						VT (min)	0.42	0.54	

Generated Date/Time: Documentation Software: EnergyPro

CA Building Energy Efficiency Standards - 2022 Nonresidential Compliance
Report Version: 2022.0.000
Schema Version: rev 20220101
Compliance ID: EnergyPro-4886-0225-0810
Report Generated: 2025-02-04 02:13:38

STATE OF CALIFORNIA

Envelope Component Approach

CALIFORNIA ENERGY COMMISSION

CERTIFICATE OF COMPLIANCE			NRCC-ENV-E
Project Name:	COS Visalia - University Center	**Report Page:**	(Page 36 of 42)
		Date Prepared:	2/4/2025

K. FENESTRATION AND GLAZED DOOR SCHEDULE

Vertical Fenestration And Glazed Doors- U-factor, Solar Heat Gain Coefficient (RSHGC/ SHGC), Visible Transmittance (VT)

04	05	06	07	08	09	10	11	12	13
Tag/Plan Detail ID	Fenestration Type	Occupancy & Status	U-factor/ (R)SHGC Compliance Method	VT Compliance Method	Calculation Method for Performance Values per Design[2]	Product Performance Unit	Required Product Performance	Product Performance per Design	Area ft^2
Window Q 3'-7"x7'-3"	Fixed window	Nonresidential/ Relocatable 1 CZ: : New			NFRC Certified	U-factor (max)	0.34	0.29	27
					☐ Overhang/ Slats used for RSHGC	(R)SHGC (max)	0.22	0.23	
						VT (min)	0.42	0.54	
Window R 5'x7'-3"	Fixed window	Nonresidential/ Relocatable 1 CZ: : New			NFRC Certified	U-factor (max)	0.34	0.29	37
					☐ Overhang/ Slats used for RSHGC	(R)SHGC (max)	0.22	0.23	
						VT (min)	0.42	0.54	
Window Q 3'-7"x7'-3"	Fixed window	Nonresidential/ Relocatable 1 CZ: : New			NFRC Certified	U-factor (max)	0.34	0.29	27
					☐ Overhang/ Slats used for RSHGC	(R)SHGC (max)	0.22	0.23	
						VT (min)	0.42	0.54	
Window R 5'x7'-3"	Fixed window	Nonresidential/ Relocatable 1 CZ: : New			NFRC Certified	U-factor (max)	0.34	0.29	37
					☐ Overhang/ Slats used for RSHGC	(R)SHGC (max)	0.22	0.23	
						VT (min)	0.42	0.54	
Window X 2'x7'-4"	Fixed window	Nonresidential/ Relocatable 1 CZ: : New			NFRC Certified	U-factor (max)	0.34	0.29	14.7
					☐ Overhang/ Slats used for RSHGC	(R)SHGC (max)	0.22	0.23	
						VT (min)	0.42	0.54	
Window X 2'x7'-4"	Fixed window	Nonresidential/ Relocatable 1 CZ: : New			NFRC Certified	U-factor (max)	0.34	0.29	14.7
					☐ Overhang/ Slats used for RSHGC	(R)SHGC (max)	0.22	0.23	
						VT (min)	0.42	0.54	

Generated Date/Time: Documentation Software: EnergyPro

CA Building Energy Efficiency Standards - 2022 Nonresidential Compliance
Report Version: 2022.0.000
Schema Version: rev 20220101
Compliance ID: EnergyPro-4886-0225-0810
Report Generated: 2025-02-04 02:13:38

IDENTIFICATION STAMP
DIV. OF THE STATE ARCHITECT
APP: 02-122821 INC: 2
REVIEWED FOR
SS ☑ FLS ☑ ACS ☑
DATE: 11/20/2025

Teter, Inc. expressly reserves its common law copyright and other property rights in these plans. This document, the ideas and designs incorporated herein, as an instrument of professional service, is not to be used in whole or in part, for any other project without prior written authorization.

MARK	DATE	DESCRIPTION
A	11/13/2025	DSA BACKCHECK

REGISTERED PROFESSIONAL ENGINEER STEVEN A. JONES M32526 Exp. 06-30-26 MECHANICAL STATE OF CALIFORNIA

TETER, INC.
FRESNO HEADQUARTERS
VISALIA | BAKERSFIELD | MODESTO | SAN LUIS OBISPO
ARCHITECTS ENGINEERS CONNECTED
TETER

VISALIA CAMPUS UNIVERSITY CENTER
COLLEGE OF THE SEQUIOAS
915 S. MOONEY BLVD
VISALIA, CALIFORNIA

DRAWING TITLE
TITLE 24 DOCUMENTATION

PROJECT NO.
22-12498

DRAWING
M903.2

\\tetr-file1\Users\zachary.davis_TETR\Documents\12498-M-UC_zachary.davis8WYRV.rvt

PLOT DATE: 8/19/2025 10:19:59 PM

\\tetr-file1\Users\zachary.davis_TETR\Documents\12498-M-UC_zachary.davis8WYRV.rvt

Envelope Component Approach

CALIFORNIA ENERGY COMMISSION

CERTIFICATE OF COMPLIANCE	**NRCC-ENV-E**
Project Name: COS Visalia - University Center	**Report Page:** **(Page 37 of 42)**
	Date Prepared: 2/4/2025

K. FENESTRATION AND GLAZED DOOR SCHEDULE

Vertical Fenestration And Glazed Doors- U-factor, Solar Heat Gain Coefficient (RSHGC/ SHGC), Visible Transmittance (VT)

04	05	06	07	08	09	10	11	12	13
Tag/Plan Detail ID	Fenestration Type	Occupancy & Status	U-factor/ (R)SHGC Compliance Method	VT Compliance Method	Calculation Method for Performance Values per Design[2]	Product Performance Unit	Required Product Performance	Product Performance per Design	Area ft[2]
Window Y 5'x7'-4"	Fixed window	Nonresidential/ Relocatable 1 CZ: : New			NFRC Certified	U-factor (max)	0.34	0.29	36.7
					☐ Overhang/ Slats used for RSHGC	(R)SHGC (max)	0.22	0.23	
						VT (min)	0.42	0.54	
Window X 2'x7'-4"	Fixed window	Nonresidential/ Relocatable 1 CZ: : New			NFRC Certified	U-factor (max)	0.34	0.29	14.7
					☐ Overhang/ Slats used for RSHGC	(R)SHGC (max)	0.22	0.23	
						VT (min)	0.42	0.54	
Window Y 5'x7'-4"	Fixed window	Nonresidential/ Relocatable 1 CZ: : New			NFRC Certified	U-factor (max)	0.34	0.29	36.7
					☐ Overhang/ Slats used for RSHGC	(R)SHGC (max)	0.22	0.23	
						VT (min)	0.42	0.54	
Window Z 3'6"x7'-4"	Fixed window	Nonresidential/ Relocatable 1 CZ: : New			NFRC Certified	U-factor (max)	0.34	0.29	25.7
					☐ Overhang/ Slats used for RSHGC	(R)SHGC (max)	0.22	0.23	
						VT (min)	0.42	0.54	
Window Z 3'6"x7'-4"	Fixed window	Nonresidential/ Relocatable 1 CZ: : New			NFRC Certified	U-factor (max)	0.34	0.29	25.7
					☐ Overhang/ Slats used for RSHGC	(R)SHGC (max)	0.22	0.23	
						VT (min)	0.42	0.54	
Window 2'x18'-6"	Fixed window	Nonresidential/ Relocatable 1 CZ: : New			NFRC Certified	U-factor (max)	0.34	0.29	37
					☐ Overhang/ Slats used for RSHGC	(R)SHGC (max)	0.22	0.23	
						VT (min)	0.42	0.54	

Envelope Component Approach

CALIFORNIA ENERGY COMMISSION

CERTIFICATE OF COMPLIANCE	**NRCC-ENV-E**
Project Name: COS Visalia - University Center	**Report Page:** **(Page 38 of 42)**
	Date Prepared: 2/4/2025

K. FENESTRATION AND GLAZED DOOR SCHEDULE

Vertical Fenestration And Glazed Doors- U-factor, Solar Heat Gain Coefficient (RSHGC/ SHGC), Visible Transmittance (VT)

04	05	06	07	08	09	10	11	12	13
Tag/Plan Detail ID	Fenestration Type	Occupancy & Status	U-factor/ (R)SHGC Compliance Method	VT Compliance Method	Calculation Method for Performance Values per Design[2]	Product Performance Unit	Required Product Performance	Product Performance per Design	Area ft[2]
Window 2'x18'-6"	Fixed window	Nonresidential/ Relocatable 1 CZ: : New			NFRC Certified	U-factor (max)	0.34	0.29	37
					☐ Overhang/ Slats used for RSHGC	(R)SHGC (max)	0.22	0.23	
						VT (min)	0.42	0.54	
Window 5'x18'-6"	Fixed window	Nonresidential/ Relocatable 1 CZ: : New			NFRC Certified	U-factor (max)	0.34	0.29	93
					☐ Overhang/ Slats used for RSHGC	(R)SHGC (max)	0.22	0.23	
						VT (min)	0.42	0.54	
Window 3'-6"x18'-6"	Fixed window	Nonresidential/ Relocatable 1 CZ: : New			NFRC Certified	U-factor (max)	0.34	0.29	65
					☐ Overhang/ Slats used for RSHGC	(R)SHGC (max)	0.22	0.23	
						VT (min)	0.42	0.54	

Overhang Details for RSHGC per 140.3/ 170.2

26	27	28	29	30	31	32
SHGC of Window						RSHGC
0.23						0.149
0.23						0.187
0.23						0.195

[1]FOOTNOTES: If any individual fenestration product is non-compliant, products may show compliance using an area-weighted calculation. Chromogenic glazing is not included in area-weighted calculations. Area-weighted calculation shown in separate area-weighted table below.
[2]The NA6 Default Calculation can only be used for alterations or dwelling units in buildings with <= 3 habitable stories. Alterations are limited to 200ft^2 of site built glazing and dwelling units are limited to 250ft^2 or 5% of conditioned floor area. If the fenestration does not meet these conditions, the only options for determining fenestration values are NFRC Certification or the Default Tables in 110.6.
[3] Overhangs must extend past the left and right window the same distance as the depth of the overhang or greater to show an affect on the RSHGC. If an overhang does not meet this requirement, the affect of the overhang will be ignored.
[4]Projecting includes casement and awning windows.

Envelope Component Approach

CALIFORNIA ENERGY COMMISSION

CERTIFICATE OF COMPLIANCE	**NRCC-ENV-E**
Project Name: COS Visalia - University Center	**Report Page:** **(Page 39 of 42)**
	Date Prepared: 2/4/2025

K. FENESTRATION AND GLAZED DOOR SCHEDULE

Skylights- Total Area

01	02	03	04
Building has Atria > 55ft?	Gross Exterior Roof Area (ft^2)	Maximum Allowed Skylight Area[1] (ft^2)	Total Skylight Area per Design (ft^2)
No	25,811	1,291	1,046

[1]FOOTNOTES: 5% of total roof area allowed for areas other than atria > 55 ft. 10% allowed for atria > 55 ft.

Skylights- U-factor, Solar Heat Gain Coefficient (SHGC), Visible Transmittance (VT)

01	☒	Calculate Area-Weighted Average U-factor for Skylights[1]
02	☒	Calculate Area-Weighted Average SHGC for Skylights[1]
03	☒	Calculate Area-Weighted Average VT for Skylights[1]

04	05	06	07	08	09	10		11	12
Tag/Plan Detail ID	Fenestration Type	Occupancy & Status	Calculation Method for Performance Values per Design[2]	Glaze/ Diffuser with Haze Value > 90%?	Compliance Method for Multifamily Alterations	Required Product Performance		Product Performance per Design	Area ft[2]
Skylight	Glass, deck mounted	Nonresidential/ Relocatable 1 CZ: : Alt. (Add/Replacement > 50ft2)	NFRC Certified			U-factor (max)	0.46	0.39	450
						SHGC (max)	0.25	0.25	
						VT (min)	0.49	0.53	
Skylight	Glass, deck mounted	Nonresidential/ Relocatable 1 CZ: : Alt. (Add/Replacement > 50ft2)	NFRC Certified			U-factor (max)	0.46	0.39	298
						SHGC (max)	0.25	0.25	
						VT (min)	0.49	0.53	
Skylight	Glass, deck mounted	Nonresidential/ Relocatable 1 CZ: : Alt. (Add/Replacement > 50ft2)	NFRC Certified			U-factor (max)	0.46	0.39	298
						SHGC (max)	0.25	0.25	
						VT (min)	0.49	0.53	

Envelope Component Approach

CALIFORNIA ENERGY COMMISSION

CERTIFICATE OF COMPLIANCE	**NRCC-ENV-E**
Project Name: COS Visalia - University Center	**Report Page:** **(Page 40 of 42)**
	Date Prepared: 2/4/2025

K. FENESTRATION AND GLAZED DOOR SCHEDULE

[1]FOOTNOTES: If any individual skylight product is non-compliant, products may show compliance using an area-weighted calculation. Chromogenic glazing is not included in area-weighted calculations. Area-weighted calculation shown in separate area-weighted table below.
[2]The NA6 Default Calculation can only be used for alterations or dwelling units in buildings with <= 3 habitable stories. Alterations are limited to 200ft^2 of site built glazing and dwelling units are limited to 250ft^2 or 5% of conditioned floor area. If the fenestration does not meet these conditions, the only options for determining fenestration values are NFRC Certification or the Default Tables in 110.6.

Area-Weighted Average U-factor, SHGC, VT Compliance Calculation for Vertical Fenestration And Glazed Doors

01	02	03	04	05
Product Performance Unit	Total Area of Fenestration (ft^2)	Area-weighted Calculation for Fenestration		Compliance Results Using Area-Weighted Calculation Option
		Required	Designed	
U-Factor	5949.7	0.45	0.29	COMPLIES
(R)SHGC	5949.7	0.228	0.22	COMPLIES
VT	5949.7	0.17	0.54	COMPLIES

Area-Weighted Average U-factor, SHGC, VT Compliance Calculation for Skylights

01	02	03	04	05
Product Performance Unit	Total Area of Fenestration (ft^2)	Area-weighted Calculation for Fenestration		Compliance Results Using Area-Weighted Calculation Option
		Required	Designed	
U-Factor	1046	0.46	0.39	COMPLIES
(R)SHGC	1046	0.25	0.25	COMPLIES
VT	1046	0.49	0.53	COMPLIES

L. DAYLIGHT IN LARGE ENCLOSED SPACES

This section does not apply to this project.

Envelope Component Approach

CALIFORNIA ENERGY COMMISSION

CERTIFICATE OF COMPLIANCE	**NRCC-ENV-E**
Project Name: COS Visalia - University Center	**Report Page:** **(Page 41 of 42)**
	Date Prepared: 2/4/2025

M. DECLARATION OF REQUIRED CERTIFICATES OF INSTALLATION

Selections have been made based on information provided in this document. If any selection have been changed by the permit applicant, an explanation should be included in Table E Additional Remarks. These documents must be provided to the building inspector during construction and can be found online

Form/Title
NRCI-ENV-01-E - Must be submitted for all buildings

N. DECLARATION OF REQUIRED CERTIFICATES OF ACCEPTANCE

Selections have been made based on information provided in previous tables of this document. If any selection needs to be changed, form user must provide an explanation in Table E Additional Remarks. These documents must be provided to the building inspector during construction and can be found online at https://www.energy.ca.gov/title24/2019standards/2019_compliance_documents/Nonresidential_Documents/NRCA/. Individuals who perform the field testing and verification work, and provide the information required for completion of the fenestration Certificate of Acceptance documentation are not required to be licensed professionals. However, the person who signs the Certificate of Acceptance document to certify compliance with the acceptance requirements shall be licensed as specified in Standards Section 10-103(a)4 and NA7.3.1

Form/Title	Systems/Spaces To Be Field Verified
NRCA-ENV-02-F must be submitted for all new, added or altered site built fenestration.	Fenestration;

O. DECLARATION OF REQUIRED CERTIFICATES OF VERIFICATION

There are no forms required for this project.

Envelope Component Approach

CALIFORNIA ENERGY COMMISSION

CERTIFICATE OF COMPLIANCE	**NRCC-ENV-E**
Project Name: COS Visalia - University Center	**Report Page:** **(Page 42 of 42)**
Project Address: 915 S. Mooney Blvd.	**Date Prepared:** 2/4/2025

DOCUMENTATION AUTHOR'S DECLARATION STATEMENT

I certify that this Certificate of Compliance documentation is accurate and complete.

Documentation Author Name:	Documentation Author Signature:
Company: Teter Architects & Engineers	Signature Date:
Address:	CEA/ HERS Certification Identification (if applicable):
City/State/Zip:	Phone:

RESPONSIBLE PERSON'S DECLARATION STATEMENT

I certify the following under penalty of perjury, under the laws of the State of California:

1. The information provided on this Certificate of Compliance is true and correct.
2. I am eligible under Division 3 of the Business and Professions Code to accept responsibility for the building design or system design identified on this Certificate of Compliance (responsible designer)
3. The energy features and performance specifications, materials, components, and manufactured devices for the building design or system design identified on this Certificate of Compliance conform to the requirements of Title 24, Part 1 and Part 6 of the California Code of Regulations.
4. The building design features or system design features identified on this Certificate of Compliance are consistent with the information provided on other applicable compliance documents, worksheets, calculations, plans and specifications submitted to the enforcement agency for approval with this building permit application.
5. I will ensure that a completed signed copy of this Certificate of Compliance shall be made available with the building permit(s) issued for the building, and made available to the enforcement agency for all applicable inspections. I understand that a completed signed copy of this Certificate of Compliance is required to be included with the documentation the builder provides to the building owner at occupancy.

Responsible Designer Name: Jon Coulter	Responsible Designer Signature:
Company: TETER, Inc.	Date Signed: 2025-02-04
Address: 7535 N. Palm Ave. Suite 201	License:
City/State/Zip: Fresno CA 93711	Phone: 559-437-0887

Mechanical Systems

CALIFORNIA ENERGY COMMISSION

CERTIFICATE OF COMPLIANCE	**NRCC-MCH-E**
This document is used to demonstrate compliance for mechanical systems that are within the scope of the permit application and are demonstrating compliance using the prescriptive path outlined in 140.4, or 141.0(b)2 for alterations.	
Project Name: COS Visalia - University Center	**Report Page:** **(Page 1 of 113)**
Project Address: 915 S. Mooney Blvd.	**Date Prepared:** 2/4/2025

A. GENERAL INFORMATION

01	Project Location (city)	Visalia	04	Total Conditioned Floor Area	46193
02	Climate Zone	13	05	Total Unconditioned Floor Area	3567
03	Occupancy Types Within Project:		06	# of Stories (Habitable Above Grade)	1

● Classroom ● Office ● Support Areas ● All Other Occupancies

B. PROJECT SCOPE

This table Includes mechanical systems or components that are within the scope of the permit application and are demonstrating compliance using the prescriptive path outlined in 140.4, 170.2(b) or 141.0(b)2 and 180.2(b)2 for alterations.

01	02	03
Air System(s)	Wet System Components	Dry System Components
☒ Heating Air System	☐ Water Economizer	☐ Air Economizer
☒ Cooling Air System	☒ Pumps	☐ Electric Resistance Heat
Mechanical Controls	☐ System Piping	☒ Fan Systems
☒ Mechanical Controls (existing to remain, altered or new)	☐ Cooling Towers	☒ Ductwork (existing to remain, altered or new)
	☒ Chillers	☒ Ventilation
	☒ Boilers	☒ Zonal Systems/ Terminal Boxes

Mechanical Systems

CALIFORNIA ENERGY COMMISSION

CERTIFICATE OF COMPLIANCE	**NRCC-MCH-E**
Project Name: COS Visalia - University Center	**Report Page:** **(Page 2 of 113)**
	Date Prepared: 2/4/2025

C. COMPLIANCE RESULTS

Table C will indicate if the project data input into the compliance document is compliant with mechanical requirements. This table is not editable by the user. If this table says "DOES NOT COMPLY" or "COMPLIES with Exceptional Conditions" refer to Table D., or the table indicated as not compliant for guidance.

01		02		03		04		05		06		07		08	09
System Summary 110.1, 110.2, 140.4, 170.2(c)	AND	Pumps 140.4(k), 170.2(c)4I	AND	Fans/ Economizers 140.4(c), 140.4(e), 170.2(c)	AND	System Controls 110.2, 120.2, 140.4(f), 170.2(c)	AND	Ventilation 120.1, 160.2	AND	Terminal Box Controls 140.4(d), 170.2(c)4B	AND	Distribution 120.3, 140.4(l), 160.2, 160.3	AND	Cooling Towers 110.2(e)2	Compliance Results
(See Table F)		(See Table G)		(See Table H)		(See Table I)		(See Table J)		(See Table K)		(See Table L)		(See Table M)	
Yes	AND	Yes	AND	Yes	AND	Yes	AND	Yes	AND	Yes	AND	Yes	AND		COMPLIES
Mandatory Measures Compliance (See Table Q for Details)										COMPLIES					

D. EXCEPTIONAL CONDITIONS

This table is auto-filled with uneditable comments because of selections made or data entered in tables throughout the form.

E. ADDITIONAL REMARKS

This table includes remarks made by the permit applicant to the Authority Having Jurisdiction.

F. HVAC SYSTEM SUMMARY (DRY & WET SYSTEMS)

Space Conditioning System Information

01	02	03	04	05	06
System Name	Quantity	System Serving	System Status	Space Type	Utilizing Recovered Heat
IDU-ODU-1	1	Single zone	New/ Addition		☐
IDU-ODU-4	1	Single zone	New/ Addition		☐
IDU-ODU-2 1st flr data	1	Single zone	New/ Addition		☐
IDU-ODU-3 1st flr elec	1	Single zone	New/ Addition		☐

Mechanical Systems

CALIFORNIA ENERGY COMMISSION

CERTIFICATE OF COMPLIANCE	**NRCC-MCH-E**
Project Name: COS Visalia - University Center	**Report Page:** **(Page 3 of 113)**
	Date Prepared: 2/4/2025

F. HVAC SYSTEM SUMMARY (DRY & WET SYSTEMS)

Space Conditioning System Information

01	02	03	04	05	06
System Name	Quantity	System Serving	System Status	Space Type	Utilizing Recovered Heat
IDU-ODU-5 2nd flr data	1	Single zone	New/ Addition		☐
IDU-ODU-6 2nd flr elec	1	Single zone	New/ Addition		☐

Dry System Equipment Sizing (includes air conditioners, condensers, heat pumps, VRF, furnaces and unit heaters and DOAS systems)

01	02	03	04	05	06	07	08	09	10	11
				Equipment Sizing per Mechanical Schedule (kBtu/h) 140.4(a&b), 170.2(c)1 & 170.2(c)2						
				Heating Output[2,3]			Cooling Output[2,3]		Load Calculations[3,4]	
Name or Item Tag	Equipment Category per Tables 110.2, 140.4(a)2 and 170.2(c)3aii	Equipment Type per Tables 110.2 and Title 20	Smallest Size Available[1] 140.4(a) and 170.2(c)1	Per Design (kBtu/h)	Rated (kBtu/h)	Supp. Heating Output (kBtu/h)	Sensible Per Design (kBtu/h)	Rated (kBtu/h)	Total Heating Load (kBtu/h)	Total Sensible Cooling Load (kBtu/h)
IDU-ODU-1	Unitary AC/ Condensers	AC, air cooled, split (1 phase)	Yes	0	0	0	17.43	13.14	-0.15	18.75
IDU-ODU-4	Unitary AC/ Condensers	AC, air cooled, split (1 phase)	Yes	0	0	0	17.43	13.14	-0.15	18.75
IDU-ODU-2 1st flr data	Unitary AC/ Condensers	AC, air cooled, split (1 phase)	Yes	0	0	0	23.21	18.48	-0.34	24.98
IDU-ODU-3 1st flr elec	Unitary Heat Pumps	Air-cooled, split (1phase)	Yes	11.54	19	0	15.67	13.14	3.36	16.61
IDU-ODU-5 2nd flr data	Unitary AC/ Condensers	AC, air cooled, split (1 phase)	Yes	0	0	0	18.53	18.48	-0.07	19.57
IDU-ODU-6 2nd flr elec	Unitary Heat Pumps	Air-cooled, split (1phase)	Yes	11.54	19	0	14.23	13.14	1.1	13.5

[1]FOOTNOTES: Equipment shall be the smallest size, within the available options of the desired equipment line, necessary to meet the design heating and cooling loads of the building per 140.4(a) and 170.2(c)1. Healthcare facilities are excepted.
[2]It is common practice to show rated output capacity on the equipment schedule. Sensible cooling output comes from specification sheet tables.
[3] If equipment is heating only, leave cooling output and load blank. If equipment is cooling only, leave heating output and load blank.
[4] Authority Having Jurisdiction may ask for load calculations used for compliance per 140.4(b) and 170.2(c).

IDENTIFICATION STAMP
DIV. OF THE STATE ARCHITECT
APP: 02-122821 INC: 2
REVIEWED FOR
SS ☑ FLS ☑ ACS ☑
DATE: 11/20/2025

Teter, Inc. expressly reserves its common law copyright and other property rights in these plans. This document, the ideas and designs incorporated herein, as an instrument of professional service, is not to be used in whole or in part, for any other project without prior written authorization.

MARK	DATE	DESCRIPTION
A	11/13/2025	DSA BACKCHECK

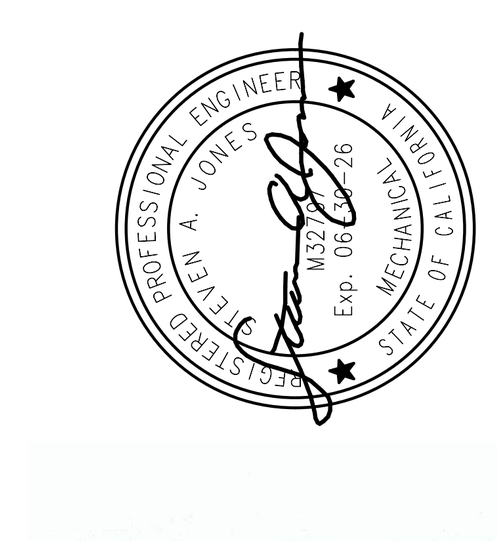

TETER, INC.
FRESNO HEADQUARTERS
VISALIA | BAKERSFIELD | MODESTO | SAN LUIS OBISPO
ARCHITECTS ENGINEERS CONNECTED
TETER

VISALIA CAMPUS UNIVERSITY CENTER
COLLEGE OF THE SEQUIOAS
915 S. MOONEY BLVD
VISALIA, CALIFORNIA

DRAWING TITLE
TITLE 24 DOCUMENTATION

PROJECT NO.
22-12498

DRAWING
M904.2

PLOT DATE: 8/19/2025 10:20:19 PM

\\tet-file1\Users\zachary.davis_TETR\Documents\12498-M-UC_zachary.davis@WYRV.rvt

F. HVAC SYSTEM SUMMARY (DRY & WET SYSTEMS)

Dry System Equipment Efficiency (other than Package Terminal Air Conditioners (PTAC) and Package Terminal Heat Pumps (PTHP), DX-DOAS and Dual Fuel Heat Pumps)

01	02	03	04	05	06	07	08	09
		Heating Mode				Cooling Mode		
Name or Item Tag	Size Category (Btu/h)	Rating Condition (°F)	Efficiency Unit	Minimum Efficiency Required per Tables 110.2 / Title 20	Design Efficiency	Efficiency Unit	Minimum Efficiency Required per Tables 110.2 / Title 20	Design Efficiency
IDU-ODU-1	<65,000					SEER2	14.3	20.2
IDU-ODU-4	<65,000					SEER2	14.3	20.2
IDU-ODU-2 1st flr data	<65,000					SEER2	14.3	21.3
IDU-ODU-3 1st flr elec	<65,000		HSPF2	7.5	9.2	SEER2	14.3	20.2
IDU-ODU-5 2nd flr data	<65,000					SEER2	14.3	21.3
IDU-ODU-6 2nd flr elec	<65,000		HSPF2	7.5	9.2	SEER2	14.3	20.2

Boiler Efficiency and Controls

Boiler System Serving	46193

01	02	03	04	05	06	07	08	09	10
Boiler Name or Item Tag	Equipment Type[1]	Qty	Rated Input Capacity (Btu/h)[2,3]	Rated Efficiency	Minimum Efficiency Required per 110.2	Efficiency Unit	Boiler Controls per 140.4(k), 170.2(c)iii		High Capacity Boiler Exceptions
							Isolation Valve	Temperature Reset	
Trane MAS	Hot Water, Gas-Fired	1	2,275,000	0.98	0.84	TE	NA: only 1 boiler in plant	Yes	No Exceptions Apply
System Efficiency			0.98	Minimum System Efficiency for High Capacity Boilers per 140.4(k)8A			0.9		

[1]*FOOTNOTES: Use NRCC-PLB to document compliance with domestic hot water and service water heating systems.*

F. HVAC SYSTEM SUMMARY (DRY & WET SYSTEMS)

Boiler Efficiency and Controls

[2]Maximum capacity- minimum and maximum ratings as provided for and allowed by the unit's controls
[3] Includes oil-fired (residual)

Chiller Efficiency and Controls

01	02	03	04	05	06	07	08	09	10
Name or Item Tag	Equipment Type	Qty	Size Category[1] (tons)	Chiller Efficiency "Path B" Exception per 140.4(i) & 170.2(c)g	Rated Efficiencies	Efficiencies Required per 110.2[2]	Efficiency Unit	Controls per 140.4(k), 170.2(c)i	
								Isolation Valve	Temperature Reset
Trane MAS	Air Cooled: Condenser elec. operated	1	>=150 and <300	No Exception Taken	10.9	>=9.700	EER	NA: only 1 chiller in plant	Yes
					17.1	>=16.100	IPLV		

G. PUMPS

This table is used to demonstrate compliance with Prescriptive hydronic system requirements found in 140.4(k) 170.2(c)4I applicable to pumps < 5hp.

01	02	03	04	05	06	07	08
Name or Item Tag	Equipment Type	Qty	HP	Controls per 140.4(k) & 170.2(c)4I			
				Variable Flow	Hydronic Heat Pump Isolation	VSD on Pumps > 5HP	Differential Pressure Sensor
HW	Primary heating hot water	2	2	Yes	NA: No hydronic heat pump	Yes	Required
CHW	Primary chilled water	2	4.6	Yes	NA: No hydronic heat pump	Yes	Required

H. FAN SYSTEMS & AIR ECONOMIZERS

This table is used to demonstrate compliance with prescriptive requirements found in 140.4(c), 140.4(e), 140.4(m), 170.2(c)3, and 170.2(c)4A for fan systems. Fan systems serving only process loads are exempt from these requirements and do not need to be included in Table H.

System Name	AH-1	Quantity	1	Fan System Status	New	System Zoning	all other systems	Serving Dwelling Units	Not Serving Dwelling Units	Fan System Airflow (cfm)	7,000	Site Elevation	325	Economizer	NA: Special OA filtration
01	02	03	04			05		06	07	08	09			10	11

Fan Name or Item Tag	Fan Type	Qty	Component	Airflow through Component (%)	Water Gauge (w.g)	Allowance: Component Allowance	Allowance: Fan Allowance (watt/cfm)[3]	Design: Design Electrical Input Power Method	Design: Motor Nameplate Horsepower	Design: Design Electrical Input Power (kW)
SF	Supply	1	Base Allowance for system serving spaces <=6 floors away	100		1792		Manufacturer provided		5.53
			MERV 13-16 Filter upstream of thermal conditioning equipment	100		840				
			Central Hydronic heating coil	100		350				
			Hydronic/DX cooling coil or heat pump coil	100		840				
			Energy Recovery >= 0.80	100		1729				
Supply Fan Base Allowance (kW)			Exhaust/Return/Relief/Transfer Fan Base Allowance(kW)			Fan System Allowance (kW)[3]		5.55	Fan System Electrical Output (kW)	5.53

H. FAN SYSTEMS & AIR ECONOMIZERS

System Name	FC 1-1	Quantity	1	Fan System Status	New	System Zoning	all other systems	Serving Dwelling Units	Not Serving Dwelling Units	Fan System Airflow (cfm)	1,200	Site Elevation	325	Economizer	NA: Special OA filtration
01	02	03	04			05		06	07	08	09			10	11

Fan Name or Item Tag	Fan Type	Qty	Component	Airflow through Component (%)	Water Gauge (w.g)	Allowance: Component Allowance	Allowance: Fan Allowance (watt/cfm)[3]	Design: Design Electrical Input Power Method	Design: Motor Nameplate Horsepower	Design: Design Electrical Input Power (kW)
SF	Supply	1	Base Allowance for system serving spaces <=6 floors away	100		278		Manufacturer provided		0.75
			MERV 13-16 Filter upstream of thermal conditioning equipment	100		167				
			Central Hydronic heating coil	100		55				
			Hydronic/DX cooling coil or heat pump coil	100		167				
Supply Fan Base Allowance (kW)			Exhaust/Return/Relief/Transfer Fan Base Allowance(kW)			Fan System Allowance (kW)[3]		1	Fan System Electrical Output (kW)	0.75

H. FAN SYSTEMS & AIR ECONOMIZERS

System Name	FC 1-2	Quantity	1	Fan System Status	New	System Zoning	all other systems	Serving Dwelling Units	Not Serving Dwelling Units	Fan System Airflow (cfm)	800	Site Elevation	325	Economizer	NA: <=33 kBtu/h cooling
01	02	03	04			05		06	07	08	09			10	11

Fan Name or Item Tag	Fan Type	Qty	Component	Airflow through Component (%)	Water Gauge (w.g)	Allowance: Component Allowance	Allowance: Fan Allowance (watt/cfm)[3]	Design: Design Electrical Input Power Method	Design: Motor Nameplate Horsepower	Design: Design Electrical Input Power (kW)
SF	Supply	1	Base Allowance for system serving spaces <=6 floors away	100		186		Manufacturer provided		0.63
			MERV 13-16 Filter upstream of thermal conditioning equipment	100		111				
			Central Hydronic heating coil	100		37				
			Hydronic/DX cooling coil or heat pump coil	100		111				
Supply Fan Base Allowance (kW)			Exhaust/Return/Relief/Transfer Fan Base Allowance(kW)			Fan System Allowance (kW)[3]		1	Fan System Electrical Output (kW)	0.63

H. FAN SYSTEMS & AIR ECONOMIZERS

System Name	FC 1-3	Quantity	1	Fan System Status	New	System Zoning	all other systems	Serving Dwelling Units	Not Serving Dwelling Units	Fan System Airflow (cfm)	870	Site Elevation	325	Economizer	NA: <=33 kBtu/h cooling
01	02	03	04			05		06	07	08	09			10	11

Fan Name or Item Tag	Fan Type	Qty	Component	Airflow through Component (%)	Water Gauge (w.g)	Allowance: Component Allowance	Allowance: Fan Allowance (watt/cfm)[3]	Design: Design Electrical Input Power Method	Design: Motor Nameplate Horsepower	Design: Design Electrical Input Power (kW)
SF	Supply	1	Base Allowance for system serving spaces <=6 floors away	100		202		Manufacturer provided		0.38
			MERV 13-16 Filter upstream of thermal conditioning equipment	100		121				
			Central Hydronic heating coil	100		40				
			Hydronic/DX cooling coil or heat pump coil	100		121				
Supply Fan Base Allowance (kW)			Exhaust/Return/Relief/Transfer Fan Base Allowance(kW)			Fan System Allowance (kW)[3]		1	Fan System Electrical Output (kW)	0.38

H. FAN SYSTEMS & AIR ECONOMIZERS

System Name	FC 1-4	Quantity	1	Fan System Status	New	System Zoning	all other systems	Serving Dwelling Units	Not Serving Dwelling Units	Fan System Airflow (cfm)	495	Site Elevation	325	Economizer	NA: <=33 kBtu/h cooling
01	02	03	04			05		06	07	08	09			10	11

Fan Name or Item Tag	Fan Type	Qty	Component	Airflow through Component (%)	Water Gauge (w.g)	Allowance: Component Allowance	Allowance: Fan Allowance (watt/cfm)[3]	Design: Design Electrical Input Power Method	Design: Motor Nameplate Horsepower	Design: Design Electrical Input Power (kW)
SF	Supply	1	Base Allowance for system serving spaces <=6 floors away	100		115		Manufacturer provided		0.27
			MERV 13-16 Filter upstream of thermal conditioning equipment	100		69				
			Central Hydronic heating coil	100		23				
			Hydronic/DX cooling coil or heat pump coil	100		69				
Supply Fan Base Allowance (kW)			Exhaust/Return/Relief/Transfer Fan Base Allowance(kW)			Fan System Allowance (kW)[3]		1	Fan System Electrical Output (kW)	0.27

H. FAN SYSTEMS & AIR ECONOMIZERS

System Name	FC 1-5	Quantity	1	Fan System Status	New	System Zoning	all other systems	Serving Dwelling Units	Not Serving Dwelling Units	Fan System Airflow (cfm)	695	Site Elevation	325	Economizer	NA: <=33 kBtu/h cooling
01	02	03	04			05		06	07	08	09			10	11

Fan Name or Item Tag	Fan Type	Qty	Component	Airflow through Component (%)	Water Gauge (w.g)	Allowance: Component Allowance	Allowance: Fan Allowance (watt/cfm)[3]	Design: Design Electrical Input Power Method	Design: Motor Nameplate Horsepower	Design: Design Electrical Input Power (kW)
SF	Supply	1	Base Allowance for system serving spaces <=6 floors away	100		161		Manufacturer provided		0.44
			MERV 13-16 Filter upstream of thermal conditioning equipment	100		97				
			Central Hydronic heating coil	100		32				
			Hydronic/DX cooling coil or heat pump coil	100		97				
Supply Fan Base Allowance (kW)			Exhaust/Return/Relief/Transfer Fan Base Allowance(kW)			Fan System Allowance (kW)[3]		1	Fan System Electrical Output (kW)	0.44

H. FAN SYSTEMS & AIR ECONOMIZERS

System Name	FC 1-6	Quantity	1	Fan System Status	New	System Zoning	all other systems	Serving Dwelling Units	Not Serving Dwelling Units	Fan System Airflow (cfm)	775	Site Elevation	325	Economizer	NA: Special OA filtration
01	02	03	04			05		06	07	08	09			10	11

Fan Name or Item Tag	Fan Type	Qty	Component	Airflow through Component (%)	Water Gauge (w.g)	Allowance: Component Allowance	Allowance: Fan Allowance (watt/cfm)[3]	Design: Design Electrical Input Power Method	Design: Motor Nameplate Horsepower	Design: Design Electrical Input Power (kW)
SF	Supply	1	Base Allowance for system serving spaces <=6 floors away	100		180		Manufacturer provided		0.52
			MERV 13-16 Filter upstream of thermal conditioning equipment	100		108				
			Central Hydronic heating coil	100		36				
			Hydronic/DX cooling coil or heat pump coil	100		108				
Supply Fan Base Allowance (kW)			Exhaust/Return/Relief/Transfer Fan Base Allowance(kW)			Fan System Allowance (kW)[3]		1	Fan System Electrical Output (kW)	0.52

IDENTIFICATION STAMP
DIV. OF THE STATE ARCHITECT
APP: 02-122821 INC: 2
REVIEWED FOR
SS ☑ FLS ☑ ACS ☑
DATE: 11/20/2025

Teter, Inc. expressly reserves its common law copyright and other property rights in these plans. This document, the ideas and designs incorporated herein, as an instrument of professional service, is not to be used in whole or part, for any other project without prior written authorization.

MARK	DATE	DESCRIPTION
A	11/13/2025	DSA BACKCHECK



TETER, INC.
FRESNO HEADQUARTERS
VISALIA | BAKERSFIELD | MODESTO | SAN LUIS OBISPO
ARCHITECTS ENGINEERS CONNECTED

VISALIA CAMPUS UNIVERSITY CENTER
COLLEGE OF THE SEQUOIAS
915 S. MOONEY BLVD
VISALIA, CALIFORNIA

DRAWING TITLE
TITLE 24 DOCUMENTATION

PROJECT NO.
22-12498

DRAWING
M905.2

PLOT DATE: 8/19/2025 10:20:38 PM

STATE OF CALIFORNIA

Mechanical Systems

CALIFORNIA ENERGY COMMISSION

CERTIFICATE OF COMPLIANCE			NRCC-MCH-E
Project Name:	COS Visalia - University Center	**Report Page:**	**(Page 13 of 113)**
		Date Prepared:	2/4/2025

H. FAN SYSTEMS & AIR ECONOMIZERS

System Name	FC 1-7	Quantity	1 Fan System Status New	System Zoning all other systems	Serving Dwelling Units	Not Serving Dwelling Units	Fan System Airflow (cfm)	480 Site Elevation 325	Economizer	NA: <=33 kBtu/h cooling
01	02	03	04	05	06	07	08	09	10	11
						Allowance		Design		
Fan Name or Item Tag	Fan Type	Qty	Component	Airflow through Component (%)	Water Gauge (w.g)	Component Allowance	Fan Allowance (watt/cfm)[3]	Design Electrical Input Power Method	Motor Nameplate Horsepower	Design Electrical Input Power (kW)
SF	Supply	1	Base Allowance for system serving spaces <=6 floors away	100		111		Manufacturer provided		0.24
			MERV 13-16 Filter upstream of thermal conditioning equipment	100		67				
			Central Hydronic heating coil	100		22				
			Hydronic/DX cooling coil or heat pump coil	100		67				
Supply Fan Base Allowance (kW)			Exhuast/Return/Relief/Transfer Fan Base Allowance(kW)			Fan System Allowance (kW)[3]		1	Fan System Electrical Output (kW)	0.24

STATE OF CALIFORNIA

Mechanical Systems

CALIFORNIA ENERGY COMMISSION

CERTIFICATE OF COMPLIANCE			NRCC-MCH-E
Project Name:	COS Visalia - University Center	**Report Page:**	**(Page 14 of 113)**
		Date Prepared:	2/4/2025

H. FAN SYSTEMS & AIR ECONOMIZERS

System Name	FC 1-8	Quantity	1 Fan System Status New	System Zoning all other systems	Serving Dwelling Units	Not Serving Dwelling Units	Fan System Airflow (cfm)	1,200 Site Elevation 325	Economizer	NA: Special OA filtration
01	02	03	04	05	06	07	08	09	10	11
						Allowance		Design		
Fan Name or Item Tag	Fan Type	Qty	Component	Airflow through Component (%)	Water Gauge (w.g)	Component Allowance	Fan Allowance (watt/cfm)[3]	Design Electrical Input Power Method	Motor Nameplate Horsepower	Design Electrical Input Power (kW)
SF	Supply	1	Base Allowance for system serving spaces <=6 floors away	100		278		Manufacturer provided		0.63
			MERV 13-16 Filter upstream of thermal conditioning equipment	100		167				
			Central Hydronic heating coil	100		55				
			Hydronic/DX cooling coil or heat pump coil	100		167				
Supply Fan Base Allowance (kW)			Exhuast/Return/Relief/Transfer Fan Base Allowance(kW)			Fan System Allowance (kW)[3]		1	Fan System Electrical Output (kW)	0.63

STATE OF CALIFORNIA

Mechanical Systems

CALIFORNIA ENERGY COMMISSION

CERTIFICATE OF COMPLIANCE			NRCC-MCH-E
Project Name:	COS Visalia - University Center	**Report Page:**	**(Page 15 of 113)**
		Date Prepared:	2/4/2025

H. FAN SYSTEMS & AIR ECONOMIZERS

System Name	FC 1-9	Quantity	1 Fan System Status New	System Zoning all other systems	Serving Dwelling Units	Not Serving Dwelling Units	Fan System Airflow (cfm)	2,550 Site Elevation 325	Economizer	NA: Special OA filtration
01	02	03	04	05	06	07	08	09	10	11
						Allowance		Design		
Fan Name or Item Tag	Fan Type	Qty	Component	Airflow through Component (%)	Water Gauge (w.g)	Component Allowance	Fan Allowance (watt/cfm)[3]	Design Electrical Input Power Method	Motor Nameplate Horsepower	Design Electrical Input Power (kW)
SF	Supply	1	Base Allowance for system serving spaces <=6 floors away	100		592		Manufacturer provided		1.03
			MERV 13-16 Filter upstream of thermal conditioning equipment	100		354				
			Central Hydronic heating coil	100		117				
			Hydronic/DX cooling coil or heat pump coil	100		354				
Supply Fan Base Allowance (kW)			Exhuast/Return/Relief/Transfer Fan Base Allowance(kW)			Fan System Allowance (kW)[3]		1.42	Fan System Electrical Output (kW)	1.03

STATE OF CALIFORNIA

Mechanical Systems

CALIFORNIA ENERGY COMMISSION

CERTIFICATE OF COMPLIANCE			NRCC-MCH-E
Project Name:	COS Visalia - University Center	**Report Page:**	**(Page 16 of 113)**
		Date Prepared:	2/4/2025

H. FAN SYSTEMS & AIR ECONOMIZERS

System Name	FC 1-10	Quantity	1 Fan System Status New	System Zoning all other systems	Serving Dwelling Units	Not Serving Dwelling Units	Fan System Airflow (cfm)	540 Site Elevation 325	Economizer	NA: <=33 kBtu/h cooling
01	02	03	04	05	06	07	08	09	10	11
						Allowance		Design		
Fan Name or Item Tag	Fan Type	Qty	Component	Airflow through Component (%)	Water Gauge (w.g)	Component Allowance	Fan Allowance (watt/cfm)[3]	Design Electrical Input Power Method	Motor Nameplate Horsepower	Design Electrical Input Power (kW)
SF	Supply	1	Base Allowance for system serving spaces <=6 floors away	100		125		Manufacturer provided		0.32
			MERV 13-16 Filter upstream of thermal conditioning equipment	100		75				
			Central Hydronic heating coil	100		25				
			Hydronic/DX cooling coil or heat pump coil	100		75				
Supply Fan Base Allowance (kW)			Exhuast/Return/Relief/Transfer Fan Base Allowance(kW)			Fan System Allowance (kW)[3]		1	Fan System Electrical Output (kW)	0.32

STATE OF CALIFORNIA

Mechanical Systems

CALIFORNIA ENERGY COMMISSION

CERTIFICATE OF COMPLIANCE			NRCC-MCH-E
Project Name:	COS Visalia - University Center	**Report Page:**	**(Page 17 of 113)**
		Date Prepared:	2/4/2025

H. FAN SYSTEMS & AIR ECONOMIZERS

System Name	FC 1-11	Quantity	1 Fan System Status New	System Zoning all other systems	Serving Dwelling Units	Not Serving Dwelling Units	Fan System Airflow (cfm)	660 Site Elevation 325	Economizer	NA: <=33 kBtu/h cooling
01	02	03	04	05	06	07	08	09	10	11
						Allowance		Design		
Fan Name or Item Tag	Fan Type	Qty	Component	Airflow through Component (%)	Water Gauge (w.g)	Component Allowance	Fan Allowance (watt/cfm)[3]	Design Electrical Input Power Method	Motor Nameplate Horsepower	Design Electrical Input Power (kW)
SF	Supply	1	Base Allowance for system serving spaces <=6 floors away	100		153		Manufacturer provided		0.38
			MERV 13-16 Filter upstream of thermal conditioning equipment	100		92				
			Central Hydronic heating coil	100		30				
			Hydronic/DX cooling coil or heat pump coil	100		92				
Supply Fan Base Allowance (kW)			Exhuast/Return/Relief/Transfer Fan Base Allowance(kW)			Fan System Allowance (kW)[3]		1	Fan System Electrical Output (kW)	0.38

STATE OF CALIFORNIA

Mechanical Systems

CALIFORNIA ENERGY COMMISSION

CERTIFICATE OF COMPLIANCE			NRCC-MCH-E
Project Name:	COS Visalia - University Center	**Report Page:**	**(Page 18 of 113)**
		Date Prepared:	2/4/2025

H. FAN SYSTEMS & AIR ECONOMIZERS

System Name	FC 1-12	Quantity	1 Fan System Status New	System Zoning all other systems	Serving Dwelling Units	Not Serving Dwelling Units	Fan System Airflow (cfm)	1,200 Site Elevation 325	Economizer	NA: Special OA filtration
01	02	03	04	05	06	07	08	09	10	11
						Allowance		Design		
Fan Name or Item Tag	Fan Type	Qty	Component	Airflow through Component (%)	Water Gauge (w.g)	Component Allowance	Fan Allowance (watt/cfm)[3]	Design Electrical Input Power Method	Motor Nameplate Horsepower	Design Electrical Input Power (kW)
SF	Supply	1	Base Allowance for system serving spaces <=6 floors away	100		278		Manufacturer provided		0.52
			MERV 13-16 Filter upstream of thermal conditioning equipment	100		167				
			Central Hydronic heating coil	100		55				
			Hydronic/DX cooling coil or heat pump coil	100		167				
Supply Fan Base Allowance (kW)			Exhuast/Return/Relief/Transfer Fan Base Allowance(kW)			Fan System Allowance (kW)[3]		1	Fan System Electrical Output (kW)	0.52

STATE OF CALIFORNIA

Mechanical Systems

CALIFORNIA ENERGY COMMISSION

CERTIFICATE OF COMPLIANCE			NRCC-MCH-E
Project Name:	COS Visalia - University Center	**Report Page:**	**(Page 19 of 113)**
		Date Prepared:	2/4/2025

H. FAN SYSTEMS & AIR ECONOMIZERS

System Name	FC 1-13	Quantity	1 Fan System Status New	System Zoning all other systems	Serving Dwelling Units	Not Serving Dwelling Units	Fan System Airflow (cfm)	1,300 Site Elevation 325	Economizer	NA: Special OA filtration
01	02	03	04	05	06	07	08	09	10	11
						Allowance		Design		
Fan Name or Item Tag	Fan Type	Qty	Component	Airflow through Component (%)	Water Gauge (w.g)	Component Allowance	Fan Allowance (watt/cfm)[3]	Design Electrical Input Power Method	Motor Nameplate Horsepower	Design Electrical Input Power (kW)
SF	Supply	1	Base Allowance for system serving spaces <=6 floors away	100		302		Manufacturer provided		0.52
			MERV 13-16 Filter upstream of thermal conditioning equipment	100		181				
			Central Hydronic heating coil	100		60				
			Hydronic/DX cooling coil or heat pump coil	100		181				
Supply Fan Base Allowance (kW)			Exhuast/Return/Relief/Transfer Fan Base Allowance(kW)			Fan System Allowance (kW)[3]		1	Fan System Electrical Output (kW)	0.52

STATE OF CALIFORNIA

Mechanical Systems

CALIFORNIA ENERGY COMMISSION

CERTIFICATE OF COMPLIANCE			NRCC-MCH-E
Project Name:	COS Visalia - University Center	**Report Page:**	**(Page 20 of 113)**
		Date Prepared:	2/4/2025

H. FAN SYSTEMS & AIR ECONOMIZERS

System Name	FC 1-14	Quantity	1 Fan System Status New	System Zoning all other systems	Serving Dwelling Units	Not Serving Dwelling Units	Fan System Airflow (cfm)	1,640 Site Elevation 325	Economizer	NA: Special OA filtration
01	02	03	04	05	06	07	08	09	10	11
						Allowance		Design		
Fan Name or Item Tag	Fan Type	Qty	Component	Airflow through Component (%)	Water Gauge (w.g)	Component Allowance	Fan Allowance (watt/cfm)[3]	Design Electrical Input Power Method	Motor Nameplate Horsepower	Design Electrical Input Power (kW)
SF	Supply	1	Base Allowance for system serving spaces <=6 floors away	100		380		Manufacturer provided		0.52
			MERV 13-16 Filter upstream of thermal conditioning equipment	100		228				
			Central Hydronic heating coil	100		75				
			Hydronic/DX cooling coil or heat pump coil	100		228				
Supply Fan Base Allowance (kW)			Exhuast/Return/Relief/Transfer Fan Base Allowance(kW)			Fan System Allowance (kW)[3]		1	Fan System Electrical Output (kW)	0.52

STATE OF CALIFORNIA

Mechanical Systems

CALIFORNIA ENERGY COMMISSION

CERTIFICATE OF COMPLIANCE			NRCC-MCH-E
Project Name:	COS Visalia - University Center	**Report Page:**	**(Page 21 of 113)**
		Date Prepared:	2/4/2025

H. FAN SYSTEMS & AIR ECONOMIZERS

System Name	FC-15/16	Quantity	1 Fan System Status New	System Zoning all other systems	Serving Dwelling Units	Not Serving Dwelling Units	Fan System Airflow (cfm)	6,000 Site Elevation 325	Economizer	NA: Special OA filtration
01	02	03	04	05	06	07	08	09	10	11
						Allowance		Design		
Fan Name or Item Tag	Fan Type	Qty	Component	Airflow through Component (%)	Water Gauge (w.g)	Component Allowance	Fan Allowance (watt/cfm)[3]	Design Electrical Input Power Method	Motor Nameplate Horsepower	Design Electrical Input Power (kW)
SF	Supply	1	Base Allowance for system serving spaces <=6 floors away	100		1536		Manufacturer provided		3.17
			MERV 13-16 Filter upstream of thermal conditioning equipment	100		720				
			Central Hydronic heating coil	100		300				
			Hydronic/DX cooling coil or heat pump coil	100		720				
Supply Fan Base Allowance (kW)			Exhuast/Return/Relief/Transfer Fan Base Allowance(kW)			Fan System Allowance (kW)[3]		3.28	Fan System Electrical Output (kW)	3.17

IDENTIFICATION STAMP
DIV. OF THE STATE ARCHITECT
APP: 02-122821 INC: 2
REVIEWED FOR
SS ☑ FLS ☑ ACS ☑
DATE: 11/20/2025

Teter, Inc. expressly reserves its common law copyright and other property rights in these plans. This document, the ideas and designs incorporated herein, as an instrument of professional service, is not to be used in whole or in part, for any other project without prior written authorization.

MARK	DATE	DESCRIPTION
A	11/13/2025	DSA BACKCHECK

REGISTERED PROFESSIONAL ENGINEER STEVEN A. JONES M32626 Exp. 06-30-26 MECHANICAL STATE OF CALIFORNIA

TETER, INC.
FRESNO HEADQUARTERS
VISALIA | BAKERSFIELD | MODESTO | SAN LUIS OBISPO
ARCHITECTS ENGINEERS CONNECTED

VISALIA CAMPUS UNIVERSITY CENTER
COLLEGE OF THE SEQUIOAS
915 S. MOONEY BLVD
VISALIA, CALIFORNIA

DRAWING TITLE
TITLE 24 DOCUMENTATION

PROJECT NO.
22-12498

DRAWING
M906.2

PLOT DATE: 8/19/2025 10:20:58 PM

\\tetr-file1\Users\zachary.davis_TETR\Documents\12498-M-UC_zachary.davis8WYRV.rvt

\\tetr-file1\Users\zachary.davis_TETR\Documents\12498-M-UC_zachary.davis8WYRV.rvt

STATE OF CALIFORNIA

Mechanical Systems

CALIFORNIA ENERGY COMMISSION

CERTIFICATE OF COMPLIANCE		NRCC-MCH-E
Project Name: COS Visalia - University Center	**Report Page:**	**(Page 22 of 113)**
	Date Prepared:	2/4/2025

H. FAN SYSTEMS & AIR ECONOMIZERS

System Name	DOAS-3 CHEM	Quantity	1	Fan System Status	New	System Zoning	all other systems	Serving Dwelling Units	Not Serving Dwelling Units	Fan System Airflow (cfm)	6,470	Site Elevation	325	Economizer	Differential Temperature
01	02	03	04			05		06	07	08	09			10	11
									Allowance		Design				
Fan Name or Item Tag	Fan Type	Qty	Component			Airflow through Component (%)		Water Gauge (w.g)	Component Allowance	Fan Allowance (watt/cfm)³	Design Electrical Input Power Method			Motor Nameplate Horsepower	Design Electrical Input Power (kW)
SF	Supply	1	Base Allowance for system serving spaces <=6 floors away			100			1656		Manufacturer provided				5.69
			MERV 13-16 Filter upstream of thermal conditioning equipment			100			776						
			Central Hydronic heating coil			100			324						
			Hydronic/DX cooling coil or heat pump coil			100			776						
			100% outdoor air system			100			647						
			Energy Recovery >= 0.80			100			1598						
RF	Return	1	Exhaust System Base Allowance			100			1227		Manufacturer provided				2.5
			Energy Recovery >= 0.80			100			1681						
			Laboratory and vivarium exhaust system with vertical ducts > 75 ft2			100			347						
Supply Fan Base Allowance (kW)			Exhuast/Return/Relief/Transfer Fan Base Allowance(kW)						Fan System Allowance (kW)³		9.03		Fan System Electrical Output (kW)		8.2

STATE OF CALIFORNIA

Mechanical Systems

CALIFORNIA ENERGY COMMISSION

CERTIFICATE OF COMPLIANCE		NRCC-MCH-E
Project Name: COS Visalia - University Center	**Report Page:**	**(Page 23 of 113)**
	Date Prepared:	2/4/2025

H. FAN SYSTEMS & AIR ECONOMIZERS

System Name	FC 2-1	Quantity	1	Fan System Status	New	System Zoning	all other systems	Serving Dwelling Units	Not Serving Dwelling Units	Fan System Airflow (cfm)	2,400	Site Elevation	325	Economizer	NA: Special OA filtration
01	02	03	04			05		06	07	08	09			10	11
									Allowance		Design				
Fan Name or Item Tag	Fan Type	Qty	Component			Airflow through Component (%)		Water Gauge (w.g)	Component Allowance	Fan Allowance (watt/cfm)³	Design Electrical Input Power Method			Motor Nameplate Horsepower	Design Electrical Input Power (kW)
SF	Supply	1	Base Allowance for system serving spaces <=6 floors away			100			557		Manufacturer provided				1.29
			MERV 13-16 Filter upstream of thermal conditioning equipment			100			334						
			Central Hydronic heating coil			100			110						
			Hydronic/DX cooling coil or heat pump coil			100			334						
Supply Fan Base Allowance (kW)			Exhuast/Return/Relief/Transfer Fan Base Allowance(kW)						Fan System Allowance (kW)³		1.33		Fan System Electrical Output (kW)		1.29

STATE OF CALIFORNIA

Mechanical Systems

CALIFORNIA ENERGY COMMISSION

CERTIFICATE OF COMPLIANCE		NRCC-MCH-E
Project Name: COS Visalia - University Center	**Report Page:**	**(Page 24 of 113)**
	Date Prepared:	2/4/2025

H. FAN SYSTEMS & AIR ECONOMIZERS

System Name	FC 2-2	Quantity	1	Fan System Status	New	System Zoning	all other systems	Serving Dwelling Units	Not Serving Dwelling Units	Fan System Airflow (cfm)	2,200	Site Elevation	325	Economizer	NA: Special OA filtration
01	02	03	04			05		06	07	08	09			10	11
									Allowance		Design				
Fan Name or Item Tag	Fan Type	Qty	Component			Airflow through Component (%)		Water Gauge (w.g)	Component Allowance	Fan Allowance (watt/cfm)³	Design Electrical Input Power Method			Motor Nameplate Horsepower	Design Electrical Input Power (kW)
SF	Supply	1	Base Allowance for system serving spaces <=6 floors away			100			510		Manufacturer provided				1.21
			MERV 13-16 Filter upstream of thermal conditioning equipment			100			306						
			Central Hydronic heating coil			100			101						
			Hydronic/DX cooling coil or heat pump coil			100			306						
Supply Fan Base Allowance (kW)			Exhuast/Return/Relief/Transfer Fan Base Allowance(kW)						Fan System Allowance (kW)³		1.22		Fan System Electrical Output (kW)		1.21

STATE OF CALIFORNIA

Mechanical Systems

CALIFORNIA ENERGY COMMISSION

CERTIFICATE OF COMPLIANCE		NRCC-MCH-E
Project Name: COS Visalia - University Center	**Report Page:**	**(Page 25 of 113)**
	Date Prepared:	2/4/2025

H. FAN SYSTEMS & AIR ECONOMIZERS

System Name	FC 2-3	Quantity	1	Fan System Status	New	System Zoning	all other systems	Serving Dwelling Units	Not Serving Dwelling Units	Fan System Airflow (cfm)	1,500	Site Elevation	325	Economizer	NA: Special OA filtration
01	02	03	04			05		06	07	08	09			10	11
									Allowance		Design				
Fan Name or Item Tag	Fan Type	Qty	Component			Airflow through Component (%)		Water Gauge (w.g)	Component Allowance	Fan Allowance (watt/cfm)³	Design Electrical Input Power Method			Motor Nameplate Horsepower	Design Electrical Input Power (kW)
SF	Supply	1	Base Allowance for system serving spaces <=6 floors away			100			348		Manufacturer provided				0.61
			MERV 13-16 Filter upstream of thermal conditioning equipment			100			209						
			Central Hydronic heating coil			100			69						
			Hydronic/DX cooling coil or heat pump coil			100			209						
Supply Fan Base Allowance (kW)			Exhuast/Return/Relief/Transfer Fan Base Allowance(kW)						Fan System Allowance (kW)³		1		Fan System Electrical Output (kW)		0.61

STATE OF CALIFORNIA

Mechanical Systems

CALIFORNIA ENERGY COMMISSION

CERTIFICATE OF COMPLIANCE		NRCC-MCH-E
Project Name: COS Visalia - University Center	**Report Page:**	**(Page 26 of 113)**
	Date Prepared:	2/4/2025

H. FAN SYSTEMS & AIR ECONOMIZERS

System Name	FC 2-4	Quantity	1	Fan System Status	New	System Zoning	all other systems	Serving Dwelling Units	Not Serving Dwelling Units	Fan System Airflow (cfm)	1,100	Site Elevation	325	Economizer	NA: Special OA filtration
01	02	03	04			05		06	07	08	09			10	11
									Allowance		Design				
Fan Name or Item Tag	Fan Type	Qty	Component			Airflow through Component (%)		Water Gauge (w.g)	Component Allowance	Fan Allowance (watt/cfm)³	Design Electrical Input Power Method			Motor Nameplate Horsepower	Design Electrical Input Power (kW)
SF	Supply	1	Base Allowance for system serving spaces <=6 floors away			100			255		Manufacturer provided				0.61
			MERV 13-16 Filter upstream of thermal conditioning equipment			100			153						
			Central Hydronic heating coil			100			51						
			Hydronic/DX cooling coil or heat pump coil			100			153						
Supply Fan Base Allowance (kW)			Exhuast/Return/Relief/Transfer Fan Base Allowance(kW)						Fan System Allowance (kW)³		1		Fan System Electrical Output (kW)		0.61

STATE OF CALIFORNIA

Mechanical Systems

CALIFORNIA ENERGY COMMISSION

CERTIFICATE OF COMPLIANCE		NRCC-MCH-E
Project Name: COS Visalia - University Center	**Report Page:**	**(Page 27 of 113)**
	Date Prepared:	2/4/2025

H. FAN SYSTEMS & AIR ECONOMIZERS

System Name	FC 2-5	Quantity	1	Fan System Status	New	System Zoning	all other systems	Serving Dwelling Units	Not Serving Dwelling Units	Fan System Airflow (cfm)	1,200	Site Elevation	325	Economizer	NA: Special OA filtration
01	02	03	04			05		06	07	08	09			10	11
									Allowance		Design				
Fan Name or Item Tag	Fan Type	Qty	Component			Airflow through Component (%)		Water Gauge (w.g)	Component Allowance	Fan Allowance (watt/cfm)³	Design Electrical Input Power Method			Motor Nameplate Horsepower	Design Electrical Input Power (kW)
SF	Supply	1	Base Allowance for system serving spaces <=6 floors away			100			278		Manufacturer provided				0.61
			MERV 13-16 Filter upstream of thermal conditioning equipment			100			167						
			Central Hydronic heating coil			100			55						
			Hydronic/DX cooling coil or heat pump coil			100			167						
Supply Fan Base Allowance (kW)			Exhuast/Return/Relief/Transfer Fan Base Allowance(kW)						Fan System Allowance (kW)³		1		Fan System Electrical Output (kW)		0.61

STATE OF CALIFORNIA

Mechanical Systems

CALIFORNIA ENERGY COMMISSION

CERTIFICATE OF COMPLIANCE		NRCC-MCH-E
Project Name: COS Visalia - University Center	**Report Page:**	**(Page 28 of 113)**
	Date Prepared:	2/4/2025

H. FAN SYSTEMS & AIR ECONOMIZERS

System Name	FC 2-6	Quantity	1	Fan System Status	New	System Zoning	all other systems	Serving Dwelling Units	Not Serving Dwelling Units	Fan System Airflow (cfm)	1,500	Site Elevation	325	Economizer	NA: Special OA filtration
01	02	03	04			05		06	07	08	09			10	11
									Allowance		Design				
Fan Name or Item Tag	Fan Type	Qty	Component			Airflow through Component (%)		Water Gauge (w.g)	Component Allowance	Fan Allowance (watt/cfm)³	Design Electrical Input Power Method			Motor Nameplate Horsepower	Design Electrical Input Power (kW)
SF	Supply	1	Base Allowance for system serving spaces <=6 floors away			100			348		Manufacturer provided				0.61
			MERV 13-16 Filter upstream of thermal conditioning equipment			100			209						
			Central Hydronic heating coil			100			69						
			Hydronic/DX cooling coil or heat pump coil			100			209						
Supply Fan Base Allowance (kW)			Exhuast/Return/Relief/Transfer Fan Base Allowance(kW)						Fan System Allowance (kW)³		1		Fan System Electrical Output (kW)		0.61

STATE OF CALIFORNIA

Mechanical Systems

CALIFORNIA ENERGY COMMISSION

CERTIFICATE OF COMPLIANCE		NRCC-MCH-E
Project Name: COS Visalia - University Center	**Report Page:**	**(Page 29 of 113)**
	Date Prepared:	2/4/2025

H. FAN SYSTEMS & AIR ECONOMIZERS

System Name	FC 2-7	Quantity	1	Fan System Status	New	System Zoning	all other systems	Serving Dwelling Units	Not Serving Dwelling Units	Fan System Airflow (cfm)	1,300	Site Elevation	325	Economizer	NA: Special OA filtration
01	02	03	04			05		06	07	08	09			10	11
									Allowance		Design				
Fan Name or Item Tag	Fan Type	Qty	Component			Airflow through Component (%)		Water Gauge (w.g)	Component Allowance	Fan Allowance (watt/cfm)³	Design Electrical Input Power Method			Motor Nameplate Horsepower	Design Electrical Input Power (kW)
SF	Supply	1	Base Allowance for system serving spaces <=6 floors away			100			302		Manufacturer provided				0.52
			MERV 13-16 Filter upstream of thermal conditioning equipment			100			181						
			Central Hydronic heating coil			100			60						
			Hydronic/DX cooling coil or heat pump coil			100			181						
Supply Fan Base Allowance (kW)			Exhuast/Return/Relief/Transfer Fan Base Allowance(kW)						Fan System Allowance (kW)³		1		Fan System Electrical Output (kW)		0.52

STATE OF CALIFORNIA

Mechanical Systems

CALIFORNIA ENERGY COMMISSION

CERTIFICATE OF COMPLIANCE		NRCC-MCH-E
Project Name: COS Visalia - University Center	**Report Page:**	**(Page 30 of 113)**
	Date Prepared:	2/4/2025

H. FAN SYSTEMS & AIR ECONOMIZERS

System Name	FC 2-8	Quantity	1	Fan System Status	New	System Zoning	all other systems	Serving Dwelling Units	Not Serving Dwelling Units	Fan System Airflow (cfm)	1,700	Site Elevation	325	Economizer	NA: Special OA filtration
01	02	03	04			05		06	07	08	09			10	11
									Allowance		Design				
Fan Name or Item Tag	Fan Type	Qty	Component			Airflow through Component (%)		Water Gauge (w.g)	Component Allowance	Fan Allowance (watt/cfm)³	Design Electrical Input Power Method			Motor Nameplate Horsepower	Design Electrical Input Power (kW)
SF	Supply	1	Base Allowance for system serving spaces <=6 floors away			100			394		Manufacturer provided				0.61
			MERV 13-16 Filter upstream of thermal conditioning equipment			100			236						
			Central Hydronic heating coil			100			78						
			Hydronic/DX cooling coil or heat pump coil			100			236						
Supply Fan Base Allowance (kW)			Exhuast/Return/Relief/Transfer Fan Base Allowance(kW)						Fan System Allowance (kW)³		1		Fan System Electrical Output (kW)		0.61

PLOT DATE: 8/19/2025 10:21:16 PM

IDENTIFICATION STAMP
DIV. OF THE STATE ARCHITECT
APP: 02-122821 INC: 2
REVIEWED FOR
SS ☑ FLS ☑ ACS ☑
DATE: 11/20/2025

Teter, Inc. expressly reserves its common law copyright and other property rights in these plans. This document, the ideas and designs incorporated herein, as an instrument of professional service, is not to be used in whole or in part, for any other project without prior written authorization.

MARK	DATE	DESCRIPTION
A	11/13/2025	DSA BACKCHECK

REGISTERED PROFESSIONAL ENGINEER STEVEN A. JONES M32826 Exp. 06-30-26 MECHANICAL STATE OF CALIFORNIA

TETER, INC.
FRESNO HEADQUARTERS
VISALIA | BAKERSFIELD | MODESTO | SAN LUIS OBISPO
ARCHITECTS ENGINEERS CONNECTED
TETER

VISALIA CAMPUS UNIVERSITY CENTER
COLLEGE OF THE SEQUIOAS
915 S. MOONEY BLVD
VISALIA, CALIFORNIA

DRAWING TITLE
TITLE 24 DOCUMENTATION

PROJECT NO.
22-12498

DRAWING
M907.2

\\tet-file-1\Users\zachary.davis_TETRD\Documents\12498-M-UC_zachary.davis8WYRV.rvt
1/8" 1/0" 0"

H. FAN SYSTEMS & AIR ECONOMIZERS

System Name	FC 2-9	Quantity	1	Fan System Status	New	System Zoning	all other systems	Serving Dwelling Units	Not Serving Dwelling Units	Fan System Airflow (cfm)	1,340	Site Elevation	325	Economizer	NA: Special OA filtration
01	02	03	04			05		06	07	08	09			10	11

Fan Name or Item Tag	Fan Type	Qty	Component	Airflow through Component (%)	Water Gauge (w.g)	Allowance: Component Allowance	Allowance: Fan Allowance (watt/cfm)[3]	Design: Design Electrical Input Power Method	Design: Motor Nameplate Horsepower	Design: Design Electrical Input Power (kW)
SF	Supply	1	Base Allowance for system serving spaces <=6 floors away	100		311		Manufacturer provided		0.52
			MERV 13-16 Filter upstream of thermal conditioning equipment	100		186				
			Central Hydronic heating coil	100		62				
			Hydronic/DX cooling coil or heat pump coil	100		186				
Supply Fan Base Allowance (kW)			Exhuast/Return/Relief/Transfer Fan Base Allowance(kW)			Fan System Allowance (kW)[3]		1	Fan System Electrical Output (kW)	0.52

H. FAN SYSTEMS & AIR ECONOMIZERS

System Name	FC 2-10	Quantity	1	Fan System Status	New	System Zoning	all other systems	Serving Dwelling Units	Not Serving Dwelling Units	Fan System Airflow (cfm)	1,300	Site Elevation	325	Economizer	NA: Special OA filtration
01	02	03	04			05		06	07	08	09			10	11

Fan Name or Item Tag	Fan Type	Qty	Component	Airflow through Component (%)	Water Gauge (w.g)	Allowance: Component Allowance	Allowance: Fan Allowance (watt/cfm)[3]	Design: Design Electrical Input Power Method	Design: Motor Nameplate Horsepower	Design: Design Electrical Input Power (kW)
SF	Supply	1	Base Allowance for system serving spaces <=6 floors away	100		302		Manufacturer provided		0.61
			MERV 13-16 Filter upstream of thermal conditioning equipment	100		181				
			Central Hydronic heating coil	100		60				
			Hydronic/DX cooling coil or heat pump coil	100		181				
Supply Fan Base Allowance (kW)			Exhuast/Return/Relief/Transfer Fan Base Allowance(kW)			Fan System Allowance (kW)[3]		1	Fan System Electrical Output (kW)	0.61

H. FAN SYSTEMS & AIR ECONOMIZERS

System Name	FC 2-11	Quantity	1	Fan System Status	New	System Zoning	all other systems	Serving Dwelling Units	Not Serving Dwelling Units	Fan System Airflow (cfm)	1,240	Site Elevation	325	Economizer	NA: Special OA filtration
01	02	03	04			05		06	07	08	09			10	11

Fan Name or Item Tag	Fan Type	Qty	Component	Airflow through Component (%)	Water Gauge (w.g)	Allowance: Component Allowance	Allowance: Fan Allowance (watt/cfm)[3]	Design: Design Electrical Input Power Method	Design: Motor Nameplate Horsepower	Design: Design Electrical Input Power (kW)
SF	Supply	1	Base Allowance for system serving spaces <=6 floors away	100		288		Manufacturer provided		0.52
			MERV 13-16 Filter upstream of thermal conditioning equipment	100		172				
			Central Hydronic heating coil	100		57				
			Hydronic/DX cooling coil or heat pump coil	100		172				
Supply Fan Base Allowance (kW)			Exhuast/Return/Relief/Transfer Fan Base Allowance(kW)			Fan System Allowance (kW)[3]		1	Fan System Electrical Output (kW)	0.52

H. FAN SYSTEMS & AIR ECONOMIZERS

System Name	FC 2-12	Quantity	1	Fan System Status	New	System Zoning	all other systems	Serving Dwelling Units	Not Serving Dwelling Units	Fan System Airflow (cfm)	2,900	Site Elevation	325	Economizer	NA: Special OA filtration
01	02	03	04			05		06	07	08	09			10	11

Fan Name or Item Tag	Fan Type	Qty	Component	Airflow through Component (%)	Water Gauge (w.g)	Allowance: Component Allowance	Allowance: Fan Allowance (watt/cfm)[3]	Design: Design Electrical Input Power Method	Design: Motor Nameplate Horsepower	Design: Design Electrical Input Power (kW)
SF	Supply	1	Base Allowance for system serving spaces <=6 floors away	100		673		Manufacturer provided		1.55
			MERV 13-16 Filter upstream of thermal conditioning equipment	100		403				
			Central Hydronic heating coil	100		133				
			Hydronic/DX cooling coil or heat pump coil	100		403				
Supply Fan Base Allowance (kW)			Exhuast/Return/Relief/Transfer Fan Base Allowance(kW)			Fan System Allowance (kW)[3]		1.61	Fan System Electrical Output (kW)	1.55

H. FAN SYSTEMS & AIR ECONOMIZERS

System Name	DOAS-1	Quantity	1	Fan System Status	New	System Zoning	all other systems	Serving Dwelling Units	Not Serving Dwelling Units	Fan System Airflow (cfm)	6,550	Site Elevation	325	Economizer	Differential Temperature
01	02	03	04			05		06	07	08	09			10	11

Fan Name or Item Tag	Fan Type	Qty	Component	Airflow through Component (%)	Water Gauge (w.g)	Allowance: Component Allowance	Allowance: Fan Allowance (watt/cfm)[3]	Design: Design Electrical Input Power Method	Design: Motor Nameplate Horsepower	Design: Design Electrical Input Power (kW)
SF	Supply	1	Base Allowance for system serving spaces <=6 floors away	100		1677		Manufacturer provided		4.88
			MERV 13-16 Filter upstream of thermal conditioning equipment	100		786				
			Central Hydronic heating coil	100		328				
			Hydronic/DX cooling coil or heat pump coil	100		786				
			100% outdoor air system	100		655				
			Energy Recovery >= 0.80	100		1618				
RF	Return	1	Exhaust System Base Allowance	100		1104		Manufacturer provided		3.53
			Energy Recovery >= 0.80	100		1512				
Supply Fan Base Allowance (kW)			Exhuast/Return/Relief/Transfer Fan Base Allowance(kW)			Fan System Allowance (kW)[3]		8.47	Fan System Electrical Output (kW)	8.41

H. FAN SYSTEMS & AIR ECONOMIZERS

System Name	DOAS-2	Quantity	1	Fan System Status	New	System Zoning	all other systems	Serving Dwelling Units	Not Serving Dwelling Units	Fan System Airflow (cfm)	5,500	Site Elevation	325	Economizer	Differential Temperature
01	02	03	04			05		06	07	08	09			10	11

Fan Name or Item Tag	Fan Type	Qty	Component	Airflow through Component (%)	Water Gauge (w.g)	Allowance: Component Allowance	Allowance: Fan Allowance (watt/cfm)[3]	Design: Design Electrical Input Power Method	Design: Motor Nameplate Horsepower	Design: Design Electrical Input Power (kW)
SF	Supply	1	Base Allowance for system serving spaces <=6 floors away	100		1408		Manufacturer provided		4.08
			MERV 13-16 Filter upstream of thermal conditioning equipment	100		660				
			Central Hydronic heating coil	100		275				
			Hydronic/DX cooling coil or heat pump coil	100		660				
			100% outdoor air system	100		550				
			Energy Recovery >= 0.80	100		1358				
RF	Return	1	Exhaust System Base Allowance	100		1012		Manufacturer provided		2.42
			Energy Recovery >= 0.80	100		1386				
Supply Fan Base Allowance (kW)			Exhuast/Return/Relief/Transfer Fan Base Allowance(kW)			Fan System Allowance (kW)[3]		7.31	Fan System Electrical Output (kW)	6.5

H. FAN SYSTEMS & AIR ECONOMIZERS

System Name	ERV-3	Quantity	1	Fan System Status	New	System Zoning	all other systems	Serving Dwelling Units	Not Serving Dwelling Units	Fan System Airflow (cfm)	3,000	Site Elevation	325	Economizer	NA: <=33 kBtu/h cooling
01	02	03	04			05		06	07	08	09			10	11

Fan Name or Item Tag	Fan Type	Qty	Component	Airflow through Component (%)	Water Gauge (w.g)	Allowance: Component Allowance	Allowance: Fan Allowance (watt/cfm)[3]	Design: Design Electrical Input Power Method	Design: Motor Nameplate Horsepower	Design: Design Electrical Input Power (kW)
SF	Supply	1	Base Allowance for system serving spaces <=6 floors away	100		696		Manufacturer provided		2
			MERV 13-16 Filter upstream of thermal conditioning equipment	100		417				
			Hydronic/DX cooling coil or heat pump coil	100		417				
			100% outdoor air system	100		210				
			Energy Recovery >= 0.80	100		867				
RF	Return	1	Exhaust System Base Allowance	100		595		Manufacturer provided		1.92
			Energy Recovery >= 0.80	100		931				
Supply Fan Base Allowance (kW)			Exhuast/Return/Relief/Transfer Fan Base Allowance(kW)			Fan System Allowance (kW)[3]		4.13	Fan System Electrical Output (kW)	3.92

H. FAN SYSTEMS & AIR ECONOMIZERS

System Name	ERV-4	Quantity	1	Fan System Status	New	System Zoning	all other systems	Serving Dwelling Units	Not Serving Dwelling Units	Fan System Airflow (cfm)	3,850	Site Elevation	325	Economizer	NA: <=33 kBtu/h cooling
01	02	03	04			05		06	07	08	09			10	11

Fan Name or Item Tag	Fan Type	Qty	Component	Airflow through Component (%)	Water Gauge (w.g)	Allowance: Component Allowance	Allowance: Fan Allowance (watt/cfm)[3]	Design: Design Electrical Input Power Method	Design: Motor Nameplate Horsepower	Design: Design Electrical Input Power (kW)
SF	Supply	1	Base Allowance for system serving spaces <=6 floors away	100		893		Manufacturer provided		2.5
			MERV 13-16 Filter upstream of thermal conditioning equipment	100		535				
			Hydronic/DX cooling coil or heat pump coil	100		535				
			100% outdoor air system	100		270				
			Energy Recovery >= 0.80	100		1113				
RF	Return	1	Exhaust System Base Allowance	100		651		Manufacturer provided		2.5
			Energy Recovery >= 0.80	100		1018				
Supply Fan Base Allowance (kW)			Exhuast/Return/Relief/Transfer Fan Base Allowance(kW)			Fan System Allowance (kW)[3]		5.02	Fan System Electrical Output (kW)	5

H. FAN SYSTEMS & AIR ECONOMIZERS

System Name	ERV-5	Quantity	1	Fan System Status	New	System Zoning	all other systems	Serving Dwelling Units	Not Serving Dwelling Units	Fan System Airflow (cfm)	2,700	Site Elevation	325	Economizer	NA: <=33 kBtu/h cooling
01	02	03	04			05		06	07	08	09			10	11

Fan Name or Item Tag	Fan Type	Qty	Component	Airflow through Component (%)	Water Gauge (w.g)	Allowance: Component Allowance	Allowance: Fan Allowance (watt/cfm)[3]	Design: Design Electrical Input Power Method	Design: Motor Nameplate Horsepower	Design: Design Electrical Input Power (kW)
SF	Supply	1	Base Allowance for system serving spaces <=6 floors away	100		626		Manufacturer provided		1.45
			MERV 13-16 Filter upstream of thermal conditioning equipment	100		375				
			Hydronic/DX cooling coil or heat pump coil	100		375				
			100% outdoor air system	100		189				
			Energy Recovery >= 0.80	100		780				
RF	Return	1	Exhaust System Base Allowance	100		502		Manufacturer provided		1.59
			Energy Recovery >= 0.80	100		786				
Supply Fan Base Allowance (kW)			Exhuast/Return/Relief/Transfer Fan Base Allowance(kW)			Fan System Allowance (kW)[3]		3.63	Fan System Electrical Output (kW)	3.04

IDENTIFICATION STAMP
DIV. OF THE STATE ARCHITECT
APP: 02-122821 INC: 2
REVIEWED FOR
SS ☑ FLS ☑ ACS ☑
DATE: 11/20/2025

Teter, Inc. expressly reserves its common law copyright and other property rights in these plans. This document, the ideas and designs incorporated herein, as an instrument of professional service, is not to be used in whole or part, for any other project without prior written authorization.

MARK	DATE	DESCRIPTION
A	11/13/2025	DSA BACKCHECK

TETER, INC.
FRESNO HEADQUARTERS
VISALIA | BAKERSFIELD | MODESTO | SAN LUIS OBISPO
ARCHITECTS ENGINEERS CONNECTED
TETER

VISALIA CAMPUS UNIVERSITY CENTER
COLLEGE OF THE SEQUOIAS
915 S. MOONEY BLVD
VISALIA, CALIFORNIA

DRAWING TITLE
TITLE 24 DOCUMENTATION

PROJECT NO.
22-12498

DRAWING
M908.2

PLOT DATE: 8/19/2025 10:21:34 PM

\\tetr-file1\Users\zachary.davis_TETR\Documents\12498-M-UC_zachary.davis8WYRV.rvt

STATE OF CALIFORNIA

Mechanical Systems

CALIFORNIA ENERGY COMMISSION

CERTIFICATE OF COMPLIANCE		NRCC-MCH-E
Project Name: COS Visalia - University Center	**Report Page:**	**(Page 40 of 113)**
	Date Prepared:	2/4/2025

H. FAN SYSTEMS & AIR ECONOMIZERS

System Name	IDU-ODU-1	Quantity	1	Fan System Status	New	System Zoning	all other systems	Serving Dwelling Units	Not Serving Dwelling Units	Fan System Airflow (cfm)	450	Site Elevation	325	Economizer	NA: <=33 kBtu/h cooling
01	02	03	04			05		06	07	08	09			10	11
									Allowance		Design				
Fan Name or Item Tag	Fan Type	Qty	Component			Airflow through Component (%)		Water Gauge (w.g)	Component Allowance	Fan Allowance (watt/cfm)[3]	Design Electrical Input Power Method			Motor Nameplate Horsepower	Design Electrical Input Power (kW)
SF	Supply	1	Base Allowance for system serving spaces <=6 floors away			100			104		Manufacturer provided				0.03
			MERV 13-16 Filter upstream of thermal conditioning equipment			100			63						
			Hydronic/DX cooling coil or heat pump coil			100			63						
Supply Fan Base Allowance (kW)			Exhuast/Return/Relief/Transfer Fan Base Allowance(kW)						Fan System Allowance (kW)[3]		1		Fan System Electrical Output (kW)		0.03

STATE OF CALIFORNIA

Mechanical Systems

CALIFORNIA ENERGY COMMISSION

CERTIFICATE OF COMPLIANCE		NRCC-MCH-E
Project Name: COS Visalia - University Center	**Report Page:**	**(Page 41 of 113)**
	Date Prepared:	2/4/2025

H. FAN SYSTEMS & AIR ECONOMIZERS

System Name	IDU-ODU-4	Quantity	1	Fan System Status	New	System Zoning	all other systems	Serving Dwelling Units	Not Serving Dwelling Units	Fan System Airflow (cfm)	450	Site Elevation	325	Economizer	NA: <=33 kBtu/h cooling
01	02	03	04			05		06	07	08	09			10	11
									Allowance		Design				
Fan Name or Item Tag	Fan Type	Qty	Component			Airflow through Component (%)		Water Gauge (w.g)	Component Allowance	Fan Allowance (watt/cfm)[3]	Design Electrical Input Power Method			Motor Nameplate Horsepower	Design Electrical Input Power (kW)
SF	Supply	1	Base Allowance for system serving spaces <=6 floors away			100			104		Manufacturer provided				0.03
			MERV 13-16 Filter upstream of thermal conditioning equipment			100			63						
			Hydronic/DX cooling coil or heat pump coil			100			63						
Supply Fan Base Allowance (kW)			Exhuast/Return/Relief/Transfer Fan Base Allowance(kW)						Fan System Allowance (kW)[3]		1		Fan System Electrical Output (kW)		0.03

STATE OF CALIFORNIA

Mechanical Systems

CALIFORNIA ENERGY COMMISSION

CERTIFICATE OF COMPLIANCE		NRCC-MCH-E
Project Name: COS Visalia - University Center	**Report Page:**	**(Page 42 of 113)**
	Date Prepared:	2/4/2025

H. FAN SYSTEMS & AIR ECONOMIZERS

System Name	IDU-ODU-2 1st flr data	Quantity	1	Fan System Status	New	System Zoning	all other systems	Serving Dwelling Units	Not Serving Dwelling Units	Fan System Airflow (cfm)	920	Site Elevation	325	Economizer	NA: <=33 kBtu/h cooling
01	02	03	04			05		06	07	08	09			10	11
									Allowance		Design				
Fan Name or Item Tag	Fan Type	Qty	Component			Airflow through Component (%)		Water Gauge (w.g)	Component Allowance	Fan Allowance (watt/cfm)[3]	Design Electrical Input Power Method			Motor Nameplate Horsepower	Design Electrical Input Power (kW)
SF	Supply	1	Base Allowance for system serving spaces <=6 floors away			100			213		Manufacturer provided				0.07
			MERV 13-16 Filter upstream of thermal conditioning equipment			100			128						
			Hydronic/DX cooling coil or heat pump coil			100			128						
Supply Fan Base Allowance (kW)			Exhuast/Return/Relief/Transfer Fan Base Allowance(kW)						Fan System Allowance (kW)[3]		1		Fan System Electrical Output (kW)		0.07

STATE OF CALIFORNIA

Mechanical Systems

CALIFORNIA ENERGY COMMISSION

CERTIFICATE OF COMPLIANCE		NRCC-MCH-E
Project Name: COS Visalia - University Center	**Report Page:**	**(Page 43 of 113)**
	Date Prepared:	2/4/2025

H. FAN SYSTEMS & AIR ECONOMIZERS

System Name	IDU-ODU-3 1st flr elec	Quantity	1	Fan System Status	New	System Zoning	all other systems	Serving Dwelling Units	Not Serving Dwelling Units	Fan System Airflow (cfm)	450	Site Elevation	325	Economizer	NA: <=33 kBtu/h cooling
01	02	03	04			05		06	07	08	09			10	11
									Allowance		Design				
Fan Name or Item Tag	Fan Type	Qty	Component			Airflow through Component (%)		Water Gauge (w.g)	Component Allowance	Fan Allowance (watt/cfm)[3]	Design Electrical Input Power Method			Motor Nameplate Horsepower	Design Electrical Input Power (kW)
SF	Supply	1	Base Allowance for system serving spaces <=6 floors away			100			104		Manufacturer provided				0.03
			MERV 13-16 Filter upstream of thermal conditioning equipment			100			63						
			Hydronic/DX cooling coil or heat pump coil			100			63						
Supply Fan Base Allowance (kW)			Exhuast/Return/Relief/Transfer Fan Base Allowance(kW)						Fan System Allowance (kW)[3]		1		Fan System Electrical Output (kW)		0.03

STATE OF CALIFORNIA

Mechanical Systems

CALIFORNIA ENERGY COMMISSION

CERTIFICATE OF COMPLIANCE		NRCC-MCH-E
Project Name: COS Visalia - University Center	**Report Page:**	**(Page 44 of 113)**
	Date Prepared:	2/4/2025

H. FAN SYSTEMS & AIR ECONOMIZERS

System Name	IDU-ODU-5 2nd flr data	Quantity	1	Fan System Status	New	System Zoning	all other systems	Serving Dwelling Units	Not Serving Dwelling Units	Fan System Airflow (cfm)	920	Site Elevation	325	Economizer	NA: <=33 kBtu/h cooling
01	02	03	04			05		06	07	08	09			10	11
									Allowance		Design				
Fan Name or Item Tag	Fan Type	Qty	Component			Airflow through Component (%)		Water Gauge (w.g)	Component Allowance	Fan Allowance (watt/cfm)[3]	Design Electrical Input Power Method			Motor Nameplate Horsepower	Design Electrical Input Power (kW)
SF	Supply	1	Base Allowance for system serving spaces <=6 floors away			100			213		Manufacturer provided				0.07
			MERV 13-16 Filter upstream of thermal conditioning equipment			100			128						
			Hydronic/DX cooling coil or heat pump coil			100			128						
Supply Fan Base Allowance (kW)			Exhuast/Return/Relief/Transfer Fan Base Allowance(kW)						Fan System Allowance (kW)[3]		1		Fan System Electrical Output (kW)		0.07

STATE OF CALIFORNIA

Mechanical Systems

CALIFORNIA ENERGY COMMISSION

CERTIFICATE OF COMPLIANCE		NRCC-MCH-E
Project Name: COS Visalia - University Center	**Report Page:**	**(Page 45 of 113)**
	Date Prepared:	2/4/2025

H. FAN SYSTEMS & AIR ECONOMIZERS

System Name	IDU-ODU-6 2nd flr elec	Quantity	1	Fan System Status	New	System Zoning	all other systems	Serving Dwelling Units	Not Serving Dwelling Units	Fan System Airflow (cfm)	450	Site Elevation	325	Economizer	NA: <=33 kBtu/h cooling
01	02	03	04			05		06	07	08	09			10	11
									Allowance		Design				
Fan Name or Item Tag	Fan Type	Qty	Component			Airflow through Component (%)		Water Gauge (w.g)	Component Allowance	Fan Allowance (watt/cfm)[3]	Design Electrical Input Power Method			Motor Nameplate Horsepower	Design Electrical Input Power (kW)
SF	Supply	1	Base Allowance for system serving spaces <=6 floors away			100			104		Manufacturer provided				0.03
			MERV 13-16 Filter upstream of thermal conditioning equipment			100			63						
			Hydronic/DX cooling coil or heat pump coil			100			63						
Supply Fan Base Allowance (kW)			Exhuast/Return/Relief/Transfer Fan Base Allowance(kW)						Fan System Allowance (kW)[3]		1		Fan System Electrical Output (kW)		0.03

[1] FOOTNOTES: Fans serving spaces with design background noise goals below NC35

[2] Low-turndown single-zone VAV fan system must be capable of and configured to reduce airflow to 50 percent of design airflow and use no more than 30 percent of the design wattage at that airflow. No more than 10 percent of the design load served by the equipment shall have fixed loads.

[3] Fan system allowance includes fan system base allowance.

[4] Filter pressure loss can only be counted once per fan system.

[5] Complex Fan System means a fan system that combines a single cabinet fan system with other supply fans, exhaust fans, or both.

[6] Computer room economizers must meet requirements of 140.9(a) and will be documented on the NRCC-PRC-E document..

H. EXHAUST AIR HEAT RECOVERY 140.4(q), 170.2(c)4O

01	02	03	04	05	06	07	08	09	10	11

STATE OF CALIFORNIA

Mechanical Systems

CALIFORNIA ENERGY COMMISSION

CERTIFICATE OF COMPLIANCE		NRCC-MCH-E
Project Name: COS Visalia - University Center	**Report Page:**	**(Page 46 of 113)**
	Date Prepared:	2/4/2025

H. EXHAUST AIR HEAT RECOVERY 140.4(q), 170.2(c)4O

Fan System Name	Qty	Hours of Operation per Year	Design Supply Airflow Rate	Outdoor Airflow	% Outdoor Air at Full Design Airflow	Exemptions to Exhaust Air Heat Recovery Requirement per 140.4(q) & 170.2(c)4O	Exhaust Air Heat Recovery 140.4(q) & 170.2(c)4O	Type Of Heat Recovery Rating	Required Recovery Ratio	Energy Recovery Bypass

Fan Energy Index (FEI)

01	02	03
Name or Item Tag	FEI Exception	FEI
AH-1	Altered Fan System	
FC 1-1	Altered Fan System	
FC 1-2	Altered Fan System	
FC 1-3	Altered Fan System	
FC 1-4	Altered Fan System	
FC 1-5	Altered Fan System	
FC 1-6	Altered Fan System	
FC 1-7	Altered Fan System	
FC 1-8	Altered Fan System	
FC 1-9	Altered Fan System	
FC 1-10	Altered Fan System	
FC 1-11	Altered Fan System	
FC 1-12	Altered Fan System	
FC 1-13	Altered Fan System	
FC 1-14	Altered Fan System	
FC-15/16	Altered Fan System	
DOAS-3 CHEM	Altered Fan System	
FC 2-1	Altered Fan System	
FC 2-2	Altered Fan System	

STATE OF CALIFORNIA

Mechanical Systems

CALIFORNIA ENERGY COMMISSION

CERTIFICATE OF COMPLIANCE		NRCC-MCH-E
Project Name: COS Visalia - University Center	**Report Page:**	**(Page 47 of 113)**
	Date Prepared:	2/4/2025

Fan Energy Index (FEI)

FC 2-3	Altered Fan System	
FC 2-4	Altered Fan System	
FC 2-5	Altered Fan System	
FC 2-6	Altered Fan System	
FC 2-7	Altered Fan System	
FC 2-8	Altered Fan System	
FC 2-9	Altered Fan System	
FC 2-10	Altered Fan System	
FC 2-11	Altered Fan System	
FC 2-12	Altered Fan System	
IDU-ODU-1	Altered Fan System	
IDU-ODU-4	Altered Fan System	
IDU-ODU-2 1st flr data	Altered Fan System	
IDU-ODU-3 1st flr elec	Altered Fan System	
IDU-ODU-5 2nd flr data	Altered Fan System	
IDU-ODU-6 2nd flr elec	Altered Fan System	

STATE OF CALIFORNIA

Mechanical Systems

CALIFORNIA ENERGY COMMISSION

CERTIFICATE OF COMPLIANCE		NRCC-MCH-E
Project Name: COS Visalia - University Center	**Report Page:**	**(Page 48 of 113)**
	Date Prepared:	2/4/2025

I. SYSTEM CONTROLS

This table is used to demonstrate compliance with mandatory controls in 110.2 and 120.2 and prescriptive controls in 140.4(f) and (n), 170.2(c)4D 170.2(c)4L or requirements in 141.0(b)2E 180.2(b)2 for altered space conditioning systems.

01	02	03	04	05	06	07	08	09
System Name	System Zoning	Conditioned Floor Area Being Served (ft^2)	Thermostats 110.2(b) & (c)[1], 120.2(a) 160.3(a)2A or 141.0(b)2E & 180.2(b)2	Shut-Off Controls 120.2(e) & 160.3(a)2D	Isolation Zone Controls 120.2(g) & 160.3(a)2F	Demand Response 110.12 120.2(b) & 160.3(a)2B	Supply Air Temp. Reset 140.4(f) & 170.2(c)4D	Window Interlocks per 140.4(n) & 170.2(c)4D
AH-1	Single zone	<= 25,000 ft^2	Setback	Auto Timer Switch	4 Hour Timer	EMCS	NA: Would increase energy use	Provided
FC 1-1	Single zone	<= 25,000 ft^2	Setback	Auto Timer Switch	4 Hour Timer	EMCS	NA: Would increase energy use	Provided
FC 1-2	Single zone	<= 25,000 ft^2	Setback	Auto Timer Switch	4 Hour Timer	EMCS	NA: Would increase energy use	Provided
FC 1-3	Single zone	<= 25,000 ft^2	Setback	Auto Timer Switch	4 Hour Timer	EMCS	NA: Would increase energy use	Provided
FC 1-4	Single zone	<= 25,000 ft^2	Setback	Auto Timer Switch	4 Hour Timer	EMCS	NA: Would increase energy use	Provided
FC 1-5	Single zone	<= 25,000 ft^2	Setback	Auto Timer Switch	4 Hour Timer	EMCS	NA: Would increase energy use	Provided
FC 1-6	Single zone	<= 25,000 ft^2	Setback	Auto Timer Switch	4 Hour Timer	EMCS	NA: Would increase energy use	Provided
FC 1-7	Single zone	<= 25,000 ft^2	Setback	Auto Timer Switch	4 Hour Timer	EMCS	NA: Would increase energy use	Provided

IDENTIFICATION STAMP
DIV. OF THE STATE ARCHITECT
APP: 02-122821 INC: 2
REVIEWED FOR
SS ☑ FLS ☑ ACS ☑
DATE: 11/20/2025

Teter, Inc. expressly reserves its common law copyright and other property rights in these plans. This document, the ideas and designs incorporated herein, as an instrument of professional service, is not to be used in whole or in part, for any other project without prior written authorization.

MARK	DATE	DESCRIPTION
A	11/13/2025	DSA BACKCHECK

TETER, INC.
FRESNO HEADQUARTERS
VISALIA | BAKERSFIELD | MODESTO | SAN LUIS OBISPO
ARCHITECTS ENGINEERS CONNECTED
TETER

VISALIA CAMPUS UNIVERSITY CENTER
COLLEGE OF THE SEQUIOAS
915 S. MOONEY BLVD
VISALIA, CALIFORNIA

DRAWING TITLE
TITLE 24 DOCUMENTATION

PROJECT NO.
22-12498

DRAWING
M909.2

PLOT DATE: 8/19/2025 10:21:52 PM

\\tetr-file1\Users\zachary.davis_TETR\Documents\12498-M-UC_zachary.davis8WYRV.rvt

I. SYSTEM CONTROLS

FC 1-8	Single zone	<= 25,000 ft^2	Setback	Auto Timer Switch	4 Hour Timer	EMCS	NA: Would increase energy use	Provided
FC 1-9	Single zone	<= 25,000 ft^2	Setback	Auto Timer Switch	4 Hour Timer	EMCS	NA: Would increase energy use	Provided
FC 1-10	Single zone	<= 25,000 ft^2	Setback	Auto Timer Switch	4 Hour Timer	EMCS	NA: Would increase energy use	Provided
FC 1-11	Single zone	<= 25,000 ft^2	Setback	Auto Timer Switch	4 Hour Timer	EMCS	NA: Would increase energy use	Provided
FC 1-12	Single zone	<= 25,000 ft^2	Setback	Auto Timer Switch	4 Hour Timer	EMCS	NA: Would increase energy use	Provided
FC 1-13	Single zone	<= 25,000 ft^2	Setback	Auto Timer Switch	4 Hour Timer	EMCS	NA: Would increase energy use	Provided
FC 1-14	Single zone	<= 25,000 ft^2	Setback	Auto Timer Switch	4 Hour Timer	EMCS	NA: Would increase energy use	Provided
FC-15/16	Single zone	<= 25,000 ft^2	Setback	Auto Timer Switch	4 Hour Timer	EMCS	NA: Would increase energy use	Provided
DOAS-3 CHEM	Single zone	<= 25,000 ft^2	Setback	Auto Timer Switch	4 Hour Timer	EMCS	NA: Would increase energy use	Provided
FC 2-1	Single zone	<= 25,000 ft^2	Setback	Auto Timer Switch	4 Hour Timer	EMCS	NA: Would increase energy use	Provided

I. SYSTEM CONTROLS

FC 2-2	Single zone	<= 25,000 ft^2	Setback	Auto Timer Switch	4 Hour Timer	EMCS	NA: Would increase energy use	Provided
FC 2-3	Single zone	<= 25,000 ft^2	Setback	Auto Timer Switch	4 Hour Timer	EMCS	NA: Would increase energy use	Provided
FC 2-4	Single zone	<= 25,000 ft^2	Setback	Auto Timer Switch	4 Hour Timer	EMCS	NA: Would increase energy use	Provided
FC 2-5	Single zone	<= 25,000 ft^2	Setback	Auto Timer Switch	4 Hour Timer	EMCS	NA: Would increase energy use	Provided
FC 2-6	Single zone	<= 25,000 ft^2	Setback	Auto Timer Switch	4 Hour Timer	EMCS	NA: Would increase energy use	Provided
FC 2-7	Single zone	<= 25,000 ft^2	Setback	Auto Timer Switch	4 Hour Timer	EMCS	NA: Would increase energy use	Provided
FC 2-8	Single zone	<= 25,000 ft^2	Setback	Auto Timer Switch	4 Hour Timer	EMCS	NA: Would increase energy use	Provided
FC 2-9	Single zone	<= 25,000 ft^2	Setback	Auto Timer Switch	4 Hour Timer	EMCS	NA: Would increase energy use	Provided
FC 2-10	Single zone	<= 25,000 ft^2	Setback	Auto Timer Switch	4 Hour Timer	EMCS	NA: Would increase energy use	Provided
FC 2-11	Single zone	<= 25,000 ft^2	Setback	Auto Timer Switch	4 Hour Timer	EMCS	NA: Would increase energy use	Provided

I. SYSTEM CONTROLS

FC 2-12	Single zone	<= 25,000 ft^2	Setback	Auto Timer Switch	4 Hour Timer	EMCS	NA: Would increase energy use	Provided
IDU-ODU-1	Single zone	<= 25,000 ft^2	Setback	Auto Timer Switch	4 Hour Timer	EMCS	NA: Would increase energy use	Provided
IDU-ODU-4	Single zone	<= 25,000 ft^2	Setback	Auto Timer Switch	4 Hour Timer	EMCS	NA: Would increase energy use	Provided
IDU-ODU-2 1st flr data	Single zone	<= 25,000 ft^2	Setback	Auto Timer Switch	4 Hour Timer	EMCS	NA: Would increase energy use	Provided
IDU-ODU-3 1st flr elec	Single zone	<= 25,000 ft^2	Setback	Auto Timer Switch	4 Hour Timer	EMCS	Included	NA: HRR dwelling unit
IDU-ODU-5 2nd flr data	Single zone	<= 25,000 ft^2	Setback	Auto Timer Switch	4 Hour Timer	EMCS	NA: Would increase energy use	Provided
IDU-ODU-6 2nd flr elec	Single zone	<= 25,000 ft^2	Setback	Auto Timer Switch	4 Hour Timer	EMCS	NA: Would increase energy use	Provided

[1]FOOTNOTES: Gravity gas wall heaters, gravity floor heaters, gravity room heaters, non-central electric heaters, fireplaces or decorative gas appliances, wood stoves are not required to have setback thermostats.

J. VENTILATION AND INDOOR AIR QUALITY

This table is used to demonstrate compliance with mandatory ventilation requirements in 120.1 120.2(e)3B 140.4(p) and 140.4(q) for all nonresidential and hotel/motel and d:t24refnolink/]160.2, 160.3(a)3D, 170.2(a)4N, 170.2(a)4O for high-rise residential occupancies. For alterations, only ventilation systems being altered within the scope of the permit application need to be documented in this table. In lieu of this table, the required outdoor ventilation rates and airflows may be shown on the plans or the calculations can be presented in a spreadsheet.

01	☐	Check the box if the project is showing ventilation calculations on the plans, or attaching the calculations instead of completing this table.
02	☒	Check this box if the project included Nonresidential, Hotel/Motel Spaces or Multifamily Common Use Spaces
	☐	
03	☐	Check the box if the project is using natural ventilation in any nonresidential or hotel/motel spaces to meet required ventilation rates per 120.1(c)2.

Nonresidential and Hotel/ Motel Multifamily Common Use Ventilation Systems

04		05			06			07	
System Name	AH-1	System Design OA CFM Airflow[1]		1667	System Design Transfer Air CFM		0	Air Filtration per 120.1(c) 141.0(b)2 and 160.2(c)21[2]	Provided
08	09	10	11	12	13	14	15	16	
Space Name or Item Tag	Mechanical Ventilation Required per 120.1(c)3[3] & 160.2(c)3					Exh. Vent per 120.1(c)4 & 160.2(c)4		DCV or Sensor Controls per 120.1(d)3, 120.1(d)5, and 120.1(e)3[6] 160.2(c)5D 160.2(c)5E 160.2(c)5D	
	Occupancy Type[4]	Conditioned Floor Area (ft^2)	# of Shower heads/ toilets	# of people[5]	Required Min OA CFM	Required Min CFM	Provided per Design CFM		
Entry Gallery	Main Entry Lobby	3334			1667	0	0	DCV	NA: Not required per §120.1(d)3
								Occ Sensor	NA: Not required space type
17	Total System Required Min OA CFM				1667	18	Ventilation for this System Complies?		Yes
04		05			06			07	
System Name	FC 1-1	System Design OA CFM Airflow[1]		366	System Design Transfer Air CFM		0	Air Filtration per 120.1(c) 141.0(b)2 and 160.2(c)21[2]	Provided
08	09	10	11	12	13	14	15	16	

J. VENTILATION AND INDOOR AIR QUALITY

Space Name or Item Tag	Mechanical Ventilation Required per 120.1(c)3[3] & 160.2(c)3					Exh. Vent per 120.1(c)4 & 160.2(c)4		DCV or Sensor Controls per 120.1(d)3, 120.1(d)5, and 120.1(e)3[6] 160.2(c)5D 160.2(c)5E 160.2(c)5D	
	Occupancy Type[4]	Conditioned Floor Area (ft^2)	# of Shower heads/ toilets	# of people[5]	Required Min OA CFM	Required Min CFM	Provided per Design CFM		
Entry Vestibule 101A	Main Entry Lobby	733			366.5	0	0	DCV	NA: Not required per §120.1(d)3
								Occ Sensor	NA: Not required space type
17	Total System Required Min OA CFM				366	18	Ventilation for this System Complies?		Yes
04		05			06			07	
System Name	FC 1-2	System Design OA CFM Airflow[1]		176	System Design Transfer Air CFM		0	Air Filtration per 120.1(c) 141.0(b)2 and 160.2(c)21[2]	Provided
08	09	10	11	12	13	14	15	16	
Space Name or Item Tag	Mechanical Ventilation Required per 120.1(c)3[3] & 160.2(c)3					Exh. Vent per 120.1(c)4 & 160.2(c)4		DCV or Sensor Controls per 120.1(d)3, 120.1(d)5, and 120.1(e)3[6] 160.2(c)5D 160.2(c)5E 160.2(c)5D	
	Occupancy Type[4]	Conditioned Floor Area (ft^2)	# of Shower heads/ toilets	# of people[5]	Required Min OA CFM	Required Min CFM	Provided per Design CFM		
Cor. 102	Corridor	1171			175.6	0	0	DCV	NA: Not required per §120.1(d)3
								Occ Sensor	NA: Not required space type
17	Total System Required Min OA CFM				176	18	Ventilation for this System Complies?		Yes
04		05			06			07	
System Name	FC 1-3	System Design OA CFM Airflow[1]		420	System Design Transfer Air CFM		0	Air Filtration per 120.1(c) 141.0(b)2 and 160.2(c)21[2]	Provided
08	09	10	11	12	13	14	15	16	

J. VENTILATION AND INDOOR AIR QUALITY

Space Name or Item Tag	Mechanical Ventilation Required per 120.1(c)3[3] & 160.2(c)3					Exh. Vent per 120.1(c)4 & 160.2(c)4		DCV or Sensor Controls per 120.1(d)3, 120.1(d)5, and 120.1(e)3[6] 160.2(c)5D 160.2(c)5E 160.2(c)5D	
	Occupancy Type[4]	Conditioned Floor Area (ft^2)	# of Shower heads/ toilets	# of people[5]	Required Min OA CFM	Required Min CFM	Provided per Design CFM		
Office 109 Cor 103 & Restrooms	Office space	1370	6		205.5	420	420	DCV	NA: Not required per §120.1(d)3
								Occ Sensor	NA: Not required space type
17	Total System Required Min OA CFM				206	18	Ventilation for this System Complies?		Yes
04		05			06			07	
System Name	FC 1-4	System Design OA CFM Airflow[1]		60	System Design Transfer Air CFM		0	Air Filtration per 120.1(c) 141.0(b)2 and 160.2(c)21[2]	Provided
08	09	10	11	12	13	14	15	16	
Space Name or Item Tag	Mechanical Ventilation Required per 120.1(c)3[3] & 160.2(c)3					Exh. Vent per 120.1(c)4 & 160.2(c)4		DCV or Sensor Controls per 120.1(d)3, 120.1(d)5, and 120.1(e)3[6] 160.2(c)5D 160.2(c)5E 160.2(c)5D	
	Occupancy Type[4]	Conditioned Floor Area (ft^2)	# of Shower heads/ toilets	# of people[5]	Required Min OA CFM	Required Min CFM	Provided per Design CFM		
Office 110C/D/E	Office space	366			54.9	0	0	DCV	NA: Not required per §120.1(d)3
								Occ Sensor	NA: Not required space type
17	Total System Required Min OA CFM				55	18	Ventilation for this System Complies?		Yes
04		05			06			07	
System Name	FC 1-5	System Design OA CFM Airflow[1]		216	System Design Transfer Air CFM		0	Air Filtration per 120.1(c) 141.0(b)2 and 160.2(c)21[2]	Provided
08	09	10	11	12	13	14	15	16	

J. VENTILATION AND INDOOR AIR QUALITY

Space Name or Item Tag	Mechanical Ventilation Required per 120.1(c)3[3] & 160.2(c)3					Exh. Vent per 120.1(c)4 & 160.2(c)4		DCV or Sensor Controls per 120.1(d)3, 120.1(d)5, and 120.1(e)3[6] 160.2(c)5D 160.2(c)5E 160.2(c)5D	
	Occupancy Type[4]	Conditioned Floor Area (ft^2)	# of Shower heads/ toilets	# of people[5]	Required Min OA CFM	Required Min CFM	Provided per Design CFM		
Program Office 110A/Meeting 110B	Office space	695			104.2	0	0	DCV	NA: Not required per §120.1(d)3
								Occ Sensor	NA: Not required space type
17	Total System Required Min OA CFM				104	18	Ventilation for this System Complies?		Yes
04		05			06			07	
System Name	FC 1-6	System Design OA CFM Airflow[1]		378	System Design Transfer Air CFM		0	Air Filtration per 120.1(c) 141.0(b)2 and 160.2(c)21[2]	Provided
08	09	10	11	12	13	14	15	16	
Space Name or Item Tag	Mechanical Ventilation Required per 120.1(c)3[3] & 160.2(c)3					Exh. Vent per 120.1(c)4 & 160.2(c)4		DCV or Sensor Controls per 120.1(d)3, 120.1(d)5, and 120.1(e)3[6] 160.2(c)5D 160.2(c)5E 160.2(c)5D	
	Occupancy Type[4]	Conditioned Floor Area (ft^2)	# of Shower heads/ toilets	# of people[5]	Required Min OA CFM	Required Min CFM	Provided per Design CFM		
Program Office 112A/Meeting 112B	Office space	800			120	0	0	DCV	NA: Not required per §120.1(d)3
								Occ Sensor	NA: Not required space type
Corridor 102 Meet 118	Corridor	1004			150.6	0	0	DCV	NA: Not required per §120.1(d)3
								Occ Sensor	NA: Not required space type
17	Total System Required Min OA CFM				271	18	Ventilation for this System Complies?		Yes

J. VENTILATION AND INDOOR AIR QUALITY

04		05			06			07	
System Name	FC 1-7	System Design OA CFM Airflow[1]		116	System Design Transfer Air CFM		0	Air Filtration per 120.1(c) 141.0(b)2 and 160.2(c)21[2]	Provided
08	09	10	11	12	13	14	15	16	
Space Name or Item Tag	Mechanical Ventilation Required per 120.1(c)3[3] & 160.2(c)3					Exh. Vent per 120.1(c)4 & 160.2(c)4		DCV or Sensor Controls per 120.1(d)3, 120.1(d)5, and 120.1(e)3[6] 160.2(c)5D 160.2(c)5E 160.2(c)5D	
	Occupancy Type[4]	Conditioned Floor Area (ft^2)	# of Shower heads/ toilets	# of people[5]	Required Min OA CFM	Required Min CFM	Provided per Design CFM		
Office 112C/D/E	Office space	380			57	0	0	DCV	NA: Not required per §120.1(d)3
								Occ Sensor	NA: Not required space type
Cor. 120 and Jan	Corridor	376			56.4	0	0	DCV	NA: Not required per §120.1(d)3
								Occ Sensor	NA: Not required space type
17	Total System Required Min OA CFM				113	18	Ventilation for this System Complies?		Yes
04		05			06			07	
System Name	FC 1-8	System Design OA CFM Airflow[1]		636	System Design Transfer Air CFM		0	Air Filtration per 120.1(c) 141.0(b)2 and 160.2(c)21[2]	Provided
08	09	10	11	12	13	14	15	16	
Space Name or Item Tag	Mechanical Ventilation Required per 120.1(c)3[3] & 160.2(c)3					Exh. Vent per 120.1(c)4 & 160.2(c)4		DCV or Sensor Controls per 120.1(d)3, 120.1(d)5, and 120.1(e)3[6] 160.2(c)5D 160.2(c)5E 160.2(c)5D	
	Occupancy Type[4]	Conditioned Floor Area (ft^2)	# of Shower heads/ toilets	# of people[5]	Required Min OA CFM	Required Min CFM	Provided per Design CFM		

J. VENTILATION AND INDOOR AIR QUALITY

Classroom 114	All others	1189			451.8	0	0	DCV	NA: Not required per §120.1(d)3
								Occ Sensor	NA: Not required space type
Corridor 102B Meet 119	Corridor	903			135.4	0	0	DCV	NA: Not required per §120.1(d)3
								Occ Sensor	NA: Not required space type
17	Total System Required Min OA CFM				587	18	Ventilation for this System Complies?		Yes
04		05			06			07	
System Name	FC 1-9	System Design OA CFM Airflow[1]		837	System Design Transfer Air CFM		0	Air Filtration per 120.1(c) 141.0(b)2 and 160.2(c)21[2]	Provided
08	09	10	11	12	13	14	15	16	
Space Name or Item Tag	Mechanical Ventilation Required per 120.1(c)3[3] & 160.2(c)3					Exh. Vent per 120.1(c)4 & 160.2(c)4		DCV or Sensor Controls per 120.1(d)3, 120.1(d)5, and 120.1(e)3[6] 160.2(c)5D 160.2(c)5E 160.2(c)5D	
	Occupancy Type[4]	Conditioned Floor Area (ft^2)	# of Shower heads/ toilets	# of people[5]	Required Min OA CFM	Required Min CFM	Provided per Design CFM		
Computer Lab 116	All others	2129			809	0	0	DCV	NA: Not required per §120.1(d)3
								Occ Sensor	NA: Not required space type
17	Total System Required Min OA CFM				809	18	Ventilation for this System Complies?		Yes
04		05			06			07	
System Name	FC 1-10	System Design OA CFM Airflow[1]		60	System Design Transfer Air CFM		0	Air Filtration per 120.1(c) 141.0(b)2 and 160.2(c)21[2]	Provided
08	09	10	11	12	13	14	15	16	

IDENTIFICATION STAMP
DIV. OF THE STATE ARCHITECT
APP: 02-122821 INC: 2
REVIEWED FOR
SS ☑ FLS ☑ ACS ☑
DATE: 11/20/2025

Teter, Inc. expressly reserves its common law copyright and other property rights in these plans. This document, the ideas and designs incorporated herein, as an instrument of professional service, is not to be used in whole or in part, for any other project without prior written authorization.

MARK	DATE	DESCRIPTION
A	11/13/2025	DSA BACKCHECK

REGISTERED PROFESSIONAL ENGINEER STEVEN A. JONES M32726 Exp. 06-30-26 MECHANICAL STATE OF CALIFORNIA

TETER, INC.
FRESNO HEADQUARTERS
VISALIA | BAKERSFIELD | MODESTO | SAN LUIS OBISPO
ARCHITECTS ENGINEERS CONNECTED
TETER

VISALIA CAMPUS UNIVERSITY CENTER
COLLEGE OF THE SEQUIOAS
915 S. MOONEY BLVD
VISALIA, CALIFORNIA

DRAWING TITLE
TITLE 24 DOCUMENTATION

PROJECT NO.
22-12498

DRAWING
M910.2

PLOT DATE: 8/19/2025 10:22:11 PM

\\tetr-file1\Users\zachary.davis_TETR\Documents\12498-M-UC_zachary.davis8WYRV.rvt

STATE OF CALIFORNIA

Mechanical Systems

CALIFORNIA ENERGY COMMISSION

CERTIFICATE OF COMPLIANCE		NRCC-MCH-E
Project Name: COS Visalia - University Center	Report Page:	(Page 58 of 113)
	Date Prepared:	2/4/2025

J. VENTILATION AND INDOOR AIR QUALITY									
Space Name or Item Tag	Mechanical Ventilation Required per 120.1(c)3[3] & 160.2(c)3					Exh. Vent per 120.1(c)4 & 160.2(c)4		DCV or Sensor Controls per 120.1(d)3, 120.1(d)5, and 120.1(e)3[6] 160.2(c)5D 160.2(c)5E 160.2(c)5D	
	Occupancy Type[4]	Conditioned Floor Area (ft^2)	# of Shower heads/ toilets	# of people[5]	Required Min OA CFM	Required Min CFM	Provided per Design CFM		
Office 111C/D/E	Office space	387			58	0	0	DCV	NA: Not required per §120.1(d)3
								Occ Sensor	NA: Not required space type
17	Total System Required Min OA CFM				58	18	Ventilation for this System Complies?		Yes
04		05			06			07	
System Name	FC 1-11	System Design OA CFM Airflow[1]		205	System Design Transfer Air CFM		0	Air Filtration per 120.1(c) 141.0(b)2 and 160.2(c)21[2]	
								Provided	
08	09	10	11	12	13	14	15	16	
Space Name or Item Tag	Mechanical Ventilation Required per 120.1(c)3[3] & 160.2(c)3					Exh. Vent per 120.1(c)4 & 160.2(c)4		DCV or Sensor Controls per 120.1(d)3, 120.1(d)5, and 120.1(e)3[6] 160.2(c)5D 160.2(c)5E 160.2(c)5D	
	Occupancy Type[4]	Conditioned Floor Area (ft^2)	# of Shower heads/ toilets	# of people[5]	Required Min OA CFM	Required Min CFM	Provided per Design CFM		
Program Office 111A/Meeting 111B	Office space	656			98.4	0	0	DCV	NA: Not required per §120.1(d)3
								Occ Sensor	NA: Not required space type
17	Total System Required Min OA CFM				98	18	Ventilation for this System Complies?		Yes
04		05			06			07	
System Name	FC 1-12	System Design OA CFM Airflow[1]		652	System Design Transfer Air CFM		0	Air Filtration per 120.1(c) 141.0(b)2 and 160.2(c)21[2]	
								Provided	
08	09	10	11	12	13	14	15	16	

STATE OF CALIFORNIA

Mechanical Systems

CALIFORNIA ENERGY COMMISSION

CERTIFICATE OF COMPLIANCE		NRCC-MCH-E
Project Name: COS Visalia - University Center	Report Page:	(Page 59 of 113)
	Date Prepared:	2/4/2025

J. VENTILATION AND INDOOR AIR QUALITY									
Space Name or Item Tag	Mechanical Ventilation Required per 120.1(c)3[3] & 160.2(c)3					Exh. Vent per 120.1(c)4 & 160.2(c)4		DCV or Sensor Controls per 120.1(d)3, 120.1(d)5, and 120.1(e)3[6] 160.2(c)5D 160.2(c)5E 160.2(c)5D	
	Occupancy Type[4]	Conditioned Floor Area (ft^2)	# of Shower heads/ toilets	# of people[5]	Required Min OA CFM	Required Min CFM	Provided per Design CFM		
Classroom 113	All others	1080			410.4	0	0	DCV	NA: Not required per §120.1(d)3
								Occ Sensor	NA: Not required space type
Corridor 102D	Corridor	938			140.7	0	0	DCV	NA: Not required per §120.1(d)3
								Occ Sensor	NA: Not required space type
17	Total System Required Min OA CFM				551	18	Ventilation for this System Complies?		Yes
04		05			06			07	
System Name	FC 1-13	System Design OA CFM Airflow[1]		600	System Design Transfer Air CFM		0	Air Filtration per 120.1(c) 141.0(b)2 and 160.2(c)21[2]	
								Provided	
08	09	10	11	12	13	14	15	16	
Space Name or Item Tag	Mechanical Ventilation Required per 120.1(c)3[3] & 160.2(c)3					Exh. Vent per 120.1(c)4 & 160.2(c)4		DCV or Sensor Controls per 120.1(d)3, 120.1(d)5, and 120.1(e)3[6] 160.2(c)5D 160.2(c)5E 160.2(c)5D	
	Occupancy Type[4]	Conditioned Floor Area (ft^2)	# of Shower heads/ toilets	# of people[5]	Required Min OA CFM	Required Min CFM	Provided per Design CFM		
Classroom 115	All others	1182		40	600	0	0	DCV	NA: Not required per §120.1(d)3
								Occ Sensor	NA: Not required space type
17	Total System Required Min OA CFM				600	18	Ventilation for this System Complies?		Yes

STATE OF CALIFORNIA

Mechanical Systems

CALIFORNIA ENERGY COMMISSION

CERTIFICATE OF COMPLIANCE		NRCC-MCH-E
Project Name: COS Visalia - University Center	Report Page:	(Page 60 of 113)
	Date Prepared:	2/4/2025

J. VENTILATION AND INDOOR AIR QUALITY									
04		05			06			07	
System Name	FC 1-14	System Design OA CFM Airflow[1]		600	System Design Transfer Air CFM		0	Air Filtration per 120.1(c) 141.0(b)2 and 160.2(c)21[2]	
								Provided	
08	09	10	11	12	13	14	15	16	
Space Name or Item Tag	Mechanical Ventilation Required per 120.1(c)3[3] & 160.2(c)3					Exh. Vent per 120.1(c)4 & 160.2(c)4		DCV or Sensor Controls per 120.1(d)3, 120.1(d)5, and 120.1(e)3[6] 160.2(c)5D 160.2(c)5E 160.2(c)5D	
	Occupancy Type[4]	Conditioned Floor Area (ft^2)	# of Shower heads/ toilets	# of people[5]	Required Min OA CFM	Required Min CFM	Provided per Design CFM		
Classroom 117	All others	1228		40	600	0	0	DCV	NA: Not required per §120.1(d)3
								Occ Sensor	NA: Not required space type
17	Total System Required Min OA CFM				600	18	Ventilation for this System Complies?		Yes
04		05			06			07	
System Name	FC-15/16	System Design OA CFM Airflow[1]		3480	System Design Transfer Air CFM		0	Air Filtration per 120.1(c) 141.0(b)2 and 160.2(c)21[2]	
								Provided	
08	09	10	11	12	13	14	15	16	
Space Name or Item Tag	Mechanical Ventilation Required per 120.1(c)3[3] & 160.2(c)3					Exh. Vent per 120.1(c)4 & 160.2(c)4		DCV or Sensor Controls per 120.1(d)3, 120.1(d)5, and 120.1(e)3[6] 160.2(c)5D 160.2(c)5E 160.2(c)5D	
	Occupancy Type[4]	Conditioned Floor Area (ft^2)	# of Shower heads/ toilets	# of people[5]	Required Min OA CFM	Required Min CFM	Provided per Design CFM		
Lecture 101	All others	4040		232	3480	0	0	DCV	Provided per §120.1(d)4
								Occ Sensor	NA: Not required space type
17	Total System Required Min OA CFM				3480	18	Ventilation for this System Complies?		Yes

STATE OF CALIFORNIA

Mechanical Systems

CALIFORNIA ENERGY COMMISSION

CERTIFICATE OF COMPLIANCE		NRCC-MCH-E
Project Name: COS Visalia - University Center	Report Page:	(Page 61 of 113)
	Date Prepared:	2/4/2025

J. VENTILATION AND INDOOR AIR QUALITY									
04		05			06			07	
System Name	DOAS-3 CHEM	System Design OA CFM Airflow[1]		6672	System Design Transfer Air CFM		0	Air Filtration per 120.1(c) 141.0(b)2 and 160.2(c)21[2]	
								Provided	
08	09	10	11	12	13	14	15	16	
Space Name or Item Tag	Mechanical Ventilation Required per 120.1(c)3[3] & 160.2(c)3					Exh. Vent per 120.1(c)4 & 160.2(c)4		DCV or Sensor Controls per 120.1(d)3, 120.1(d)5, and 120.1(e)3[6] 160.2(c)5D 160.2(c)5E 160.2(c)5D	
	Occupancy Type[4]	Conditioned Floor Area (ft^2)	# of Shower heads/ toilets	# of people[5]	Required Min OA CFM	Required Min CFM	Provided per Design CFM		
Chemistry Lab 202	Science Laboratories	1632			244.8	1632	6672	DCV	NA: Not required per §120.1(d)3
								Occ Sensor	NA: Not required space type
17	Total System Required Min OA CFM				245	18	Ventilation for this System Complies?		Yes
04		05			06			07	
System Name	FC 2-1	System Design OA CFM Airflow[1]		1585	System Design Transfer Air CFM		0	Air Filtration per 120.1(c) 141.0(b)2 and 160.2(c)21[2]	
								Provided	
08	09	10	11	12	13	14	15	16	
Space Name or Item Tag	Mechanical Ventilation Required per 120.1(c)3[3] & 160.2(c)3					Exh. Vent per 120.1(c)4 & 160.2(c)4		DCV or Sensor Controls per 120.1(d)3, 120.1(d)5, and 120.1(e)3[6] 160.2(c)5D 160.2(c)5E 160.2(c)5D	
	Occupancy Type[4]	Conditioned Floor Area (ft^2)	# of Shower heads/ toilets	# of people[5]	Required Min OA CFM	Required Min CFM	Provided per Design CFM		
Prep/Stor/Office 204-5	All others	1585			237.8	1585	1585	DCV	NA: Not required per §120.1(d)3
								Occ Sensor	NA: Not required space type
17	Total System Required Min OA CFM				238	18	Ventilation for this System Complies?		Yes

STATE OF CALIFORNIA

Mechanical Systems

CALIFORNIA ENERGY COMMISSION

CERTIFICATE OF COMPLIANCE		NRCC-MCH-E
Project Name: COS Visalia - University Center	Report Page:	(Page 62 of 113)
	Date Prepared:	2/4/2025

J. VENTILATION AND INDOOR AIR QUALITY									
04		05			06			07	
System Name	FC 2-2	System Design OA CFM Airflow[1]		1608	System Design Transfer Air CFM		0	Air Filtration per 120.1(c) 141.0(b)2 and 160.2(c)21[2]	
								Provided	
08	09	10	11	12	13	14	15	16	
Space Name or Item Tag	Mechanical Ventilation Required per 120.1(c)3[3] & 160.2(c)3					Exh. Vent per 120.1(c)4 & 160.2(c)4		DCV or Sensor Controls per 120.1(d)3, 120.1(d)5, and 120.1(e)3[6] 160.2(c)5D 160.2(c)5E 160.2(c)5D	
	Occupancy Type[4]	Conditioned Floor Area (ft^2)	# of Shower heads/ toilets	# of people[5]	Required Min OA CFM	Required Min CFM	Provided per Design CFM		
Biology Lab 203	All others	1608			241.2	1608	1608	DCV	NA: Not required per §120.1(d)3
								Occ Sensor	NA: Not required space type
17	Total System Required Min OA CFM				241	18	Ventilation for this System Complies?		Yes
04		05			06			07	
System Name	FC 2-3	System Design OA CFM Airflow[1]		621	System Design Transfer Air CFM		0	Air Filtration per 120.1(c) 141.0(b)2 and 160.2(c)21[2]	
								Provided	
08	09	10	11	12	13	14	15	16	
Space Name or Item Tag	Mechanical Ventilation Required per 120.1(c)3[3] & 160.2(c)3					Exh. Vent per 120.1(c)4 & 160.2(c)4		DCV or Sensor Controls per 120.1(d)3, 120.1(d)5, and 120.1(e)3[6] 160.2(c)5D 160.2(c)5E 160.2(c)5D	
	Occupancy Type[4]	Conditioned Floor Area (ft^2)	# of Shower heads/ toilets	# of people[5]	Required Min OA CFM	Required Min CFM	Provided per Design CFM		
Stem Corridor 201	Corridor	2205			330.8	0	0	DCV	NA: Not required per §120.1(d)3
								Occ Sensor	NA: Not required space type
17	Total System Required Min OA CFM				331	18	Ventilation for this System Complies?		Yes

STATE OF CALIFORNIA

Mechanical Systems

CALIFORNIA ENERGY COMMISSION

CERTIFICATE OF COMPLIANCE		NRCC-MCH-E
Project Name: COS Visalia - University Center	Report Page:	(Page 63 of 113)
	Date Prepared:	2/4/2025

J. VENTILATION AND INDOOR AIR QUALITY									
04		05			06			07	
System Name	FC 2-4	System Design OA CFM Airflow[1]		420	System Design Transfer Air CFM		0	Air Filtration per 120.1(c) 141.0(b)2 and 160.2(c)21[2]	
								Provided	
08	09	10	11	12	13	14	15	16	
Space Name or Item Tag	Mechanical Ventilation Required per 120.1(c)3[3] & 160.2(c)3					Exh. Vent per 120.1(c)4 & 160.2(c)4		DCV or Sensor Controls per 120.1(d)3, 120.1(d)5, and 120.1(e)3[6] 160.2(c)5D 160.2(c)5E 160.2(c)5D	
	Occupancy Type[4]	Conditioned Floor Area (ft^2)	# of Shower heads/ toilets	# of people[5]	Required Min OA CFM	Required Min CFM	Provided per Design CFM		
Restrooms,Meet 207/208/209, Sto229	Office space	1469	6		220.4	420	420	DCV	NA: Not required per §120.1(d)3
								Occ Sensor	NA: Not required space type
17	Total System Required Min OA CFM				220	18	Ventilation for this System Complies?		Yes
04		05			06			07	
System Name	FC 2-5	System Design OA CFM Airflow[1]		565	System Design Transfer Air CFM		0	Air Filtration per 120.1(c) 141.0(b)2 and 160.2(c)21[2]	
								Provided	
08	09	10	11	12	13	14	15	16	
Space Name or Item Tag	Mechanical Ventilation Required per 120.1(c)3[3] & 160.2(c)3					Exh. Vent per 120.1(c)4 & 160.2(c)4		DCV or Sensor Controls per 120.1(d)3, 120.1(d)5, and 120.1(e)3[6] 160.2(c)5D 160.2(c)5E 160.2(c)5D	
	Occupancy Type[4]	Conditioned Floor Area (ft^2)	# of Shower heads/ toilets	# of people[5]	Required Min OA CFM	Required Min CFM	Provided per Design CFM		
Faculty Lounge 210A/Meeting 210B	Break room	1111			555.5	0	0	DCV	NA: Not required per §120.1(d)3
								Occ Sensor	NA: Not required space type
17	Total System Required Min OA CFM				556	18	Ventilation for this System Complies?		Yes

STATE OF CALIFORNIA

Mechanical Systems

CALIFORNIA ENERGY COMMISSION

CERTIFICATE OF COMPLIANCE		NRCC-MCH-E
Project Name: COS Visalia - University Center	Report Page:	(Page 64 of 113)
	Date Prepared:	2/4/2025

J. VENTILATION AND INDOOR AIR QUALITY									
04		05			06			07	
System Name	FC 2-6	System Design OA CFM Airflow[1]		699	System Design Transfer Air CFM		0	Air Filtration per 120.1(c) 141.0(b)2 and 160.2(c)21[2]	
								Provided	
08	09	10	11	12	13	14	15	16	
Space Name or Item Tag	Mechanical Ventilation Required per 120.1(c)3[3] & 160.2(c)3					Exh. Vent per 120.1(c)4 & 160.2(c)4		DCV or Sensor Controls per 120.1(d)3, 120.1(d)5, and 120.1(e)3[6] 160.2(c)5D 160.2(c)5E 160.2(c)5D	
	Occupancy Type[4]	Conditioned Floor Area (ft^2)	# of Shower heads/ toilets	# of people[5]	Required Min OA CFM	Required Min CFM	Provided per Design CFM		
Classroom 212	All others	1030		40	600	0	0	DCV	NA: Not required per §120.1(d)3
								Occ Sensor	NA: Not required space type
Corridor 200	Corridor	662			99.3	0	0	DCV	NA: Not required per §120.1(d)3
								Occ Sensor	NA: Not required space type
17	Total System Required Min OA CFM				699	18	Ventilation for this System Complies?		Yes
04		05			06			07	
System Name	FC 2-7	System Design OA CFM Airflow[1]		635	System Design Transfer Air CFM		0	Air Filtration per 120.1(c) 141.0(b)2 and 160.2(c)21[2]	
								Provided	
08	09	10	11	12	13	14	15	16	
Space Name or Item Tag	Mechanical Ventilation Required per 120.1(c)3[3] & 160.2(c)3					Exh. Vent per 120.1(c)4 & 160.2(c)4		DCV or Sensor Controls per 120.1(d)3, 120.1(d)5, and 120.1(e)3[6] 160.2(c)5D 160.2(c)5E 160.2(c)5D	
	Occupancy Type[4]	Conditioned Floor Area (ft^2)	# of Shower heads/ toilets	# of people[5]	Required Min OA CFM	Required Min CFM	Provided per Design CFM		

STATE OF CALIFORNIA

Mechanical Systems

CALIFORNIA ENERGY COMMISSION

CERTIFICATE OF COMPLIANCE		NRCC-MCH-E
Project Name: COS Visalia - University Center	Report Page:	(Page 65 of 113)
	Date Prepared:	2/4/2025

J. VENTILATION AND INDOOR AIR QUALITY									
Classroom 214	All others	1180		40	600	0	0	DCV	NA: Not required per §120.1(d)3
								Occ Sensor	NA: Not required space type
Cor 218	Corridor	233			34.9	0	0	DCV	NA: Not required per §120.1(d)3
								Occ Sensor	NA: Not required space type
Jan 221	All others	136			0	0	0	DCV	NA: Not required per §120.1(d)3
								Occ Sensor	NA: Not required space type
17	Total System Required Min OA CFM				635	18	Ventilation for this System Complies?		Yes
04		05			06			07	
System Name	FC 2-8	System Design OA CFM Airflow[1]		675	System Design Transfer Air CFM		0	Air Filtration per 120.1(c) 141.0(b)2 and 160.2(c)21[2]	
								Provided	
08	09	10	11	12	13	14	15	16	
Space Name or Item Tag	Mechanical Ventilation Required per 120.1(c)3[3] & 160.2(c)3					Exh. Vent per 120.1(c)4 & 160.2(c)4		DCV or Sensor Controls per 120.1(d)3, 120.1(d)5, and 120.1(e)3[6] 160.2(c)5D 160.2(c)5E 160.2(c)5D	
	Occupancy Type[4]	Conditioned Floor Area (ft^2)	# of Shower heads/ toilets	# of people[5]	Required Min OA CFM	Required Min CFM	Provided per Design CFM		
Classroom 216	All others	1300		40	600	0	0	DCV	NA: Not required per §120.1(d)3
								Occ Sensor	NA: Not required space type

STATE OF CALIFORNIA

Mechanical Systems

CALIFORNIA ENERGY COMMISSION

CERTIFICATE OF COMPLIANCE		NRCC-MCH-E
Project Name: COS Visalia - University Center	Report Page:	(Page 66 of 113)
	Date Prepared:	2/4/2025

J. VENTILATION AND INDOOR AIR QUALITY									
Corridor 200	Corridor	499			74.8	0	0	DCV	NA: Not required per §120.1(d)3
								Occ Sensor	NA: Not required space type
17	Total System Required Min OA CFM				675	18	Ventilation for this System Complies?		Yes
04		05			06			07	
System Name	FC 2-9	System Design OA CFM Airflow[1]		625	System Design Transfer Air CFM		0	Air Filtration per 120.1(c) 141.0(b)2 and 160.2(c)21[2]	
								Provided	
08	09	10	11	12	13	14	15	16	
Space Name or Item Tag	Mechanical Ventilation Required per 120.1(c)3[3] & 160.2(c)3					Exh. Vent per 120.1(c)4 & 160.2(c)4		DCV or Sensor Controls per 120.1(d)3, 120.1(d)5, and 120.1(e)3[6] 160.2(c)5D 160.2(c)5E 160.2(c)5D	
	Occupancy Type[4]	Conditioned Floor Area (ft^2)	# of Shower heads/ toilets	# of people[5]	Required Min OA CFM	Required Min CFM	Provided per Design CFM		
Classroom 211 230	All others	1254		42	662.3	0	0	DCV	NA: Not required per §120.1(d)3
								Occ Sensor	NA: Not required space type
17	Total System Required Min OA CFM				662	18	Ventilation for this System Complies?		Yes
04		05			06			07	
System Name	FC 2-10	System Design OA CFM Airflow[1]		739	System Design Transfer Air CFM		0	Air Filtration per 120.1(c) 141.0(b)2 and 160.2(c)21[2]	
								Provided	
08	09	10	11	12	13	14	15	16	
Space Name or Item Tag	Mechanical Ventilation Required per 120.1(c)3[3] & 160.2(c)3					Exh. Vent per 120.1(c)4 & 160.2(c)4		DCV or Sensor Controls per 120.1(d)3, 120.1(d)5, and 120.1(e)3[6] 160.2(c)5D 160.2(c)5E 160.2(c)5D	
	Occupancy Type[4]	Conditioned Floor Area (ft^2)	# of Shower heads/ toilets	# of people[5]	Required Min OA CFM	Required Min CFM	Provided per Design CFM		

IDENTIFICATION STAMP
DIV. OF THE STATE ARCHITECT
APP: 02-122821 INC: 2
REVIEWED FOR
SS ☑ FLS ☑ ACS ☑
DATE: 11/20/2025

Teter, Inc. expressly reserves its common law copyright and other property rights in these plans. This document, the ideas and designs incorporated herein, as an instrument of professional service, is not to be used in whole or in part, for any other project without prior written authorization.

MARK	DATE	DESCRIPTION
A	11/13/2025	DSA BACKCHECK

REGISTERED PROFESSIONAL ENGINEER STEVEN A. JONES M32926 Exp. 06-30-26 MECHANICAL STATE OF CALIFORNIA

TETER, INC.
FRESNO HEADQUARTERS
VISALIA | BAKERSFIELD | MODESTO | SAN LUIS OBISPO
ARCHITECTS ENGINEERS CONNECTED
TETER

VISALIA CAMPUS UNIVERSITY CENTER
COLLEGE OF THE SEQUIOAS
915 S. MOONEY BLVD
VISALIA, CALIFORNIA

DRAWING TITLE
TITLE 24 DOCUMENTATION

PROJECT NO.
22-12498

DRAWING
M911.2

PLOT DATE: 8/19/2025 10:22:41 PM

J. VENTILATION AND INDOOR AIR QUALITY									
Classroom 213	All others	1065		40	600	0	0	DCV	NA: Not required per §120.1(d)3
								Occ Sensor	NA: Not required space type
Corridor 200A	Corridor	928			139.2	0	0	DCV	NA: Not required per §120.1(d)3
								Occ Sensor	NA: Not required space type
17	Total System Required Min OA CFM				739	18	Ventilation for this System Complies?		Yes
04		05			06			07	
System Name	FC 2-11	System Design OA CFM Airflow[1]		600	System Design Transfer Air CFM		0	Air Filtration per 120.1(c) 141.0(b)2 and 160.2(c)21[2]	
								Provided	
08	09	10	11	12	13	14	15	16	
Space Name or Item Tag	Mechanical Ventilation Required per 120.1(c)3[3] & 160.2(c)3					Exh. Vent per 120.1(c)4 & 160.2(c)4		DCV or Sensor Controls per 120.1(d)3, 120.1(d)5, and 120.1(e)3[6] 160.2(c)5D 160.2(c)5E 160.2(c)5D	
	Occupancy Type[4]	Conditioned Floor Area (ft^2)	# of Shower heads/ toilets	# of people[5]	Required Min OA CFM	Required Min CFM	Provided per Design CFM		
Classroom 215	All others	1144		40	600	0	0	DCV	NA: Not required per §120.1(d)3
								Occ Sensor	NA: Not required space type
17	Total System Required Min OA CFM				600	18	Ventilation for this System Complies?		Yes
04		05			06			07	
System Name	FC 2-12	System Design OA CFM Airflow[1]		718	System Design Transfer Air CFM		0	Air Filtration per 120.1(c) 141.0(b)2 and 160.2(c)21[2]	
								Provided	
08	09	10	11	12	13	14	15	16	

J. VENTILATION AND INDOOR AIR QUALITY									
Space Name or Item Tag	Mechanical Ventilation Required per 120.1(c)3[3] & 160.2(c)3					Exh. Vent per 120.1(c)4 & 160.2(c)4		DCV or Sensor Controls per 120.1(d)3, 120.1(d)5, and 120.1(e)3[6] 160.2(c)5D 160.2(c)5E 160.2(c)5D	
	Occupancy Type[4]	Conditioned Floor Area (ft^2)	# of Shower heads/ toilets	# of people[5]	Required Min OA CFM	Required Min CFM	Provided per Design CFM		
Computer Lab 217	Computer Lab	1400		40	600	0	0	DCV	NA: Not required per §120.1(d)3
								Occ Sensor	NA: Not required space type
Corridor 200B	Corridor	787			118	0	0	DCV	NA: Not required per §120.1(d)3
								Occ Sensor	NA: Not required space type
17	Total System Required Min OA CFM				718	18	Ventilation for this System Complies?		Yes
04		05			06			07	
System Name	IDU-ODU-1	System Design OA CFM Airflow[1]		0	System Design Transfer Air CFM		0	Air Filtration per 120.1(c) 141.0(b)2 and 160.2(c)21[2]	
								Provided	
08	09	10	11	12	13	14	15	16	
Space Name or Item Tag	Mechanical Ventilation Required per 120.1(c)3[3] & 160.2(c)3					Exh. Vent per 120.1(c)4 & 160.2(c)4		DCV or Sensor Controls per 120.1(d)3, 120.1(d)5, and 120.1(e)3[6] 160.2(c)5D 160.2(c)5E 160.2(c)5D	
	Occupancy Type[4]	Conditioned Floor Area (ft^2)	# of Shower heads/ toilets	# of people[5]	Required Min OA CFM	Required Min CFM	Provided per Design CFM		
EMR 108	All others	58			0	0	0	DCV	NA: Not required per §120.1(d)3
								Occ Sensor	NA: Not required space type
17	Total System Required Min OA CFM				0	18	Ventilation for this System Complies?		Yes

J. VENTILATION AND INDOOR AIR QUALITY									
04		05			06			07	
System Name	IDU-ODU-4	System Design OA CFM Airflow[1]		0	System Design Transfer Air CFM		0	Air Filtration per 120.1(c) 141.0(b)2 and 160.2(c)21[2]	
								Provided	
08	09	10	11	12	13	14	15	16	
Space Name or Item Tag	Mechanical Ventilation Required per 120.1(c)3[3] & 160.2(c)3					Exh. Vent per 120.1(c)4 & 160.2(c)4		DCV or Sensor Controls per 120.1(d)3, 120.1(d)5, and 120.1(e)3[6] 160.2(c)5D 160.2(c)5E 160.2(c)5D	
	Occupancy Type[4]	Conditioned Floor Area (ft^2)	# of Shower heads/ toilets	# of people[5]	Required Min OA CFM	Required Min CFM	Provided per Design CFM		
EMR 121	All others	58			0	0	0	DCV	NA: Not required per §120.1(d)3
								Occ Sensor	NA: Not required space type
17	Total System Required Min OA CFM				0	18	Ventilation for this System Complies?		Yes
04		05			06			07	
System Name	IDU-ODU-2 1st flr data	System Design OA CFM Airflow[1]		0	System Design Transfer Air CFM		0	Air Filtration per 120.1(c) 141.0(b)2 and 160.2(c)21[2]	
								Provided	
08	09	10	11	12	13	14	15	16	
Space Name or Item Tag	Mechanical Ventilation Required per 120.1(c)3[3] & 160.2(c)3					Exh. Vent per 120.1(c)4 & 160.2(c)4		DCV or Sensor Controls per 120.1(d)3, 120.1(d)5, and 120.1(e)3[6] 160.2(c)5D 160.2(c)5E 160.2(c)5D	
	Occupancy Type[4]	Conditioned Floor Area (ft^2)	# of Shower heads/ toilets	# of people[5]	Required Min OA CFM	Required Min CFM	Provided per Design CFM		
Data 126	All others	291			0	0	0	DCV	NA: Not required per §120.1(d)3
								Occ Sensor	NA: Not required space type
17	Total System Required Min OA CFM				0	18	Ventilation for this System Complies?		Yes

J. VENTILATION AND INDOOR AIR QUALITY									
04		05			06			07	
System Name	IDU-ODU-3 1st flr elec	System Design OA CFM Airflow[1]		0	System Design Transfer Air CFM		0	Air Filtration per 120.1(c) 141.0(b)2 and 160.2(c)21[2]	
								Provided	
08	09	10	11	12	13	14	15	16	
Space Name or Item Tag	Mechanical Ventilation Required per 120.1(c)3[3] & 160.2(c)3					Exh. Vent per 120.1(c)4 & 160.2(c)4		DCV or Sensor Controls per 120.1(d)3, 120.1(d)5, and 120.1(e)3[6] 160.2(c)5D 160.2(c)5E 160.2(c)5D	
	Occupancy Type[4]	Conditioned Floor Area (ft^2)	# of Shower heads/ toilets	# of people[5]	Required Min OA CFM	Required Min CFM	Provided per Design CFM		
Elec 127	All others	257			0	0	0	DCV	NA: Not required per §120.1(d)3
								Occ Sensor	NA: Not required space type
17	Total System Required Min OA CFM				0	18	Ventilation for this System Complies?		Yes
04		05			06			07	
System Name	IDU-ODU-5 2nd flr data	System Design OA CFM Airflow[1]		0	System Design Transfer Air CFM		0	Air Filtration per 120.1(c) 141.0(b)2 and 160.2(c)21[2]	
								Provided	
08	09	10	11	12	13	14	15	16	
Space Name or Item Tag	Mechanical Ventilation Required per 120.1(c)3[3] & 160.2(c)3					Exh. Vent per 120.1(c)4 & 160.2(c)4		DCV or Sensor Controls per 120.1(d)3, 120.1(d)5, and 120.1(e)3[6] 160.2(c)5D 160.2(c)5E 160.2(c)5D	
	Occupancy Type[4]	Conditioned Floor Area (ft^2)	# of Shower heads/ toilets	# of people[5]	Required Min OA CFM	Required Min CFM	Provided per Design CFM		
Data 231	All others	118			0	0	0	DCV	NA: Not required per §120.1(d)3
								Occ Sensor	NA: Not required space type
17	Total System Required Min OA CFM				0	18	Ventilation for this System Complies?		Yes

J. VENTILATION AND INDOOR AIR QUALITY									
04		05			06			07	
System Name	IDU-ODU-6 2nd flr elec	System Design OA CFM Airflow[1]		0	System Design Transfer Air CFM		0	Air Filtration per 120.1(c) 141.0(b)2 and 160.2(c)21[2]	
								Provided	
08	09	10	11	12	13	14	15	16	
Space Name or Item Tag	Mechanical Ventilation Required per 120.1(c)3[3] & 160.2(c)3					Exh. Vent per 120.1(c)4 & 160.2(c)4		DCV or Sensor Controls per 120.1(d)3, 120.1(d)5, and 120.1(e)3[6] 160.2(c)5D 160.2(c)5E 160.2(c)5D	
	Occupancy Type[4]	Conditioned Floor Area (ft^2)	# of Shower heads/ toilets	# of people[5]	Required Min OA CFM	Required Min CFM	Provided per Design CFM		
Elec 232	All others	222			0	0	0	DCV	NA: Not required per §120.1(d)3
								Occ Sensor	NA: Not required space type
17	Total System Required Min OA CFM				0	18	Ventilation for this System Complies?		Yes

[1] FOOTNOTES: System CFM should include both mechanical and natural ventilation for the zone/system

[2] Air filtration requirements apply to the following three system types per 120.1(c)1A: space conditioning systems utilizing ducts to supply air to occupiable space; supply-only ventilation systems providing outside air to occupiable space; supply side of balanced ventilation systems including heat recovery and energy recovery ventilation systems providing outside air to occupiable space.

[3] Uniform Mechanical Code may have more stringent ventilation requirements; the most stringent code requirement takes precedence.

[4] See Standards Tables 120.1-A and 120.1-B.

[5] For lecture halls with fixed seating, the expected number of occupants shall be determined in accordance with the California Building Code.

[6] 120.2(e)3 requires systems serving rooms that are required by 130.1(c) to have lighting occupancy sensing controls to also have occupancy sensing zone controls for ventilation. Examples of spaces which require lighting occupancy sensors include offices 250ft² or smaller, multipurpose rooms less than 1,000 ft², classrooms, conference rooms, restrooms, aisles and open areas in warehouses, library book stack aisles, corridors, stairwells, parking garages, and loading and unloading zones, unless excepted by 130.1(c).

K. TERMINAL BOX CONTROLS

This table is used to demonstrate compliance with prescriptive zone control requirements in 140.4(d) & 170.2(c)4B.

01	02	03	04	05	06	07	08	09	10	11	12
Zone/System/VAV Box Name or Item Tag	Zonal Control Strategy per 140.4(d)	Design			Deadband Compliance			Reheated, Recooled, Mixed Air Compliance			Complies
		Peak Primary Airflow CFM	Primary Air in Deadband CFM	Reheated Recooled Mixed Airflow CFM	Outside Air CFM	30% of Peak Primary Airflow CFM	Max Deadband Airflow CFM	50% of Peak Primary Airflow	1st Stage Modulates <=95 °F and Maintains DB Rate?	2nd Stage Modulates from DB Flow to Heating Max Flow?	
Chemistry Lab 202	No Reheat, Recool, Mixing	6670	2001	6670	273.2	1334	1335	3335	Yes	Yes	Yes

L. DISTRIBUTION (DUCTWORK and PIPING)

This table is used to show compliance with mandatory pipe insulation requirements found in 120.3 and mandatory requirements found in 120.4(g) for duct sealing.

01	☐	Insulation shall be protected from damage, including that due to sunlight, moisture, equipment maintenance, and wind. Insulation exposed to weather shall be installed with a cover suitable for outdoor service. Insulation covering chilled water piping and refrigerant suction piping located outside the conditioned space shall have a Class I or Class II vapor retarder. All penetrations and joints of which shall be sealed.

Duct Leakage Testing

The answers to the questions below apply to the following duct systems:	AH-1	**NR/ Common Use:** Duct leakage testing shall not exceed 6% per NA7.5.3 required for these systems?	No

L. DISTRIBUTION (DUCTWORK and PIPING)				
			Dwelling Units: Total duct leakage of duct system shall not exceed 12% or duct system to outside shall not exceed 6% per RA3.1.4 required for systems?	No
			Duct leakage testing per CMC Section 603.10.1 required for these systems?	Yes
11	No	The scope of the project includes only duct systems serving healthcare facilities		
12	Yes	Duct system provides conditioned air to an occupiable space for a constant volume, single zone, space-conditioning system.		
13	Yes	The space conditioning system serves less than 5,000 ft² of conditioned floor area.		
14	No	The combined surface area of the ducts is more than 25% of the total surface area of the entire duct system:		
15		The scope of the project includes extending an existing duct system, which is constructed, insulated or sealed with asbestos.		
16	No	The scope of the project includes an existing duct system that is documented to have been previously sealed as confirmed through field verification and diagnostic testing in accordance with procedures in the Reference Nonresidential Appendix NA2.		
17		All Ductwork and plenums with pressure class ratings shall be constructed to Seal Class A		
18		All ductwork is an extension of an existing duct system		
19		Ductwork serving individual dwelling unit		
20		< 25 ft of new or replacement space conditioning ducts installed		
21	R-8	Duct Insulation R-value		
22				
23				
The answers to the questions below apply to the following duct systems:		FC 1-1	**NR/ Common Use:** Duct leakage testing shall not exceed 6% per NA7.5.3 required for these systems?	No

L. DISTRIBUTION (DUCTWORK and PIPING)				
			Dwelling Units: Total duct leakage of duct system shall not exceed 12% or duct system to outside shall not exceed 6% per RA3.1.4 required for systems?	No
			Duct leakage testing per CMC Section 603.10.1 required for these systems?	Yes
11	No	The scope of the project includes only duct systems serving healthcare facilities		
12	Yes	Duct system provides conditioned air to an occupiable space for a constant volume, single zone, space-conditioning system.		
13	Yes	The space conditioning system serves less than 5,000 ft² of conditioned floor area.		
14	No	The combined surface area of the ducts is more than 25% of the total surface area of the entire duct system:		
15		The scope of the project includes extending an existing duct system, which is constructed, insulated or sealed with asbestos.		
16	No	The scope of the project includes an existing duct system that is documented to have been previously sealed as confirmed through field verification and diagnostic testing in accordance with procedures in the Reference Nonresidential Appendix NA2.		
17		All Ductwork and plenums with pressure class ratings shall be constructed to Seal Class A		
18		All ductwork is an extension of an existing duct system		
19		Ductwork serving individual dwelling unit		
20		< 25 ft of new or replacement space conditioning ducts installed		
21	R-8	Duct Insulation R-value		
22				
23				
The answers to the questions below apply to the following duct systems:		FC 1-2	**NR/ Common Use:** Duct leakage testing shall not exceed 6% per NA7.5.3 required for these systems?	No

L. DISTRIBUTION (DUCTWORK and PIPING)				
			Dwelling Units: Total duct leakage of duct system shall not exceed 12% or duct system to outside shall not exceed 6% per RA3.1.4 required for systems?	No
			Duct leakage testing per CMC Section 603.10.1 required for these systems?	Yes
11	No	The scope of the project includes only duct systems serving healthcare facilities		
12	Yes	Duct system provides conditioned air to an occupiable space for a constant volume, single zone, space-conditioning system.		
13	Yes	The space conditioning system serves less than 5,000 ft² of conditioned floor area.		
14	No	The combined surface area of the ducts is more than 25% of the total surface area of the entire duct system:		
15		The scope of the project includes extending an existing duct system, which is constructed, insulated or sealed with asbestos.		
16	No	The scope of the project includes an existing duct system that is documented to have been previously sealed as confirmed through field verification and diagnostic testing in accordance with procedures in the Reference Nonresidential Appendix NA2.		
17		All Ductwork and plenums with pressure class ratings shall be constructed to Seal Class A		
18		All ductwork is an extension of an existing duct system		
19		Ductwork serving individual dwelling unit		
20		< 25 ft of new or replacement space conditioning ducts installed		
21	R-8	Duct Insulation R-value		
22				
23				
The answers to the questions below apply to the following duct systems:		FC 1-3	**NR/ Common Use:** Duct leakage testing shall not exceed 6% per NA7.5.3 required for these systems?	No

IDENTIFICATION STAMP
DIV. OF THE STATE ARCHITECT
APP: 02-122821 INC: 2
REVIEWED FOR
SS ☑ FLS ☑ ACS ☑
DATE: 11/20/2025

Teter, Inc. expressly reserves its common law copyright and other property rights in these plans. This document, the ideas and designs incorporated herein, as an instrument of professional service, is not to be used in whole or in part, for any other project without prior written authorization.

MARK	DATE	DESCRIPTION
A	11/13/2025	DSA BACKCHECK

REGISTERED PROFESSIONAL ENGINEER STEVEN A. JONES M32526 Exp. 06-30-26 MECHANICAL STATE OF CALIFORNIA

TETER, INC.
FRESNO HEADQUARTERS
VISALIA | BAKERSFIELD | MODESTO | SAN LUIS OBISPO
ARCHITECTS ENGINEERS CONNECTED

VISALIA CAMPUS UNIVERSITY CENTER
COLLEGE OF THE SEQUIOAS
915 S. MOONEY BLVD
VISALIA, CALIFORNIA

DRAWING TITLE
TITLE 24 DOCUMENTATION

PROJECT NO.
22-12498

DRAWING
M912.2

\\tetr-file1\Users\zachary.davis_TETR\Documents\12498-M-UC_zachary.davis8WYRV.rvt
PLOT DATE: 8/19/2025 10:22:59 PM

\\tet-file1\Users\zachary.davis_TETR\Documents\12498-M-UC_zachary.davisBWYRV.rvt
1/8" 1/0" 1'
PLOT DATE: 8/19/2025 10:23:17 PM

STATE OF CALIFORNIA
Mechanical Systems
CALIFORNIA ENERGY COMMISSION

CERTIFICATE OF COMPLIANCE		NRCC-MCH-E
Project Name: COS Visalia - University Center	**Report Page:**	**(Page 76 of 113)**
	Date Prepared:	2/4/2025

L. DISTRIBUTION (DUCTWORK and PIPING)

			Dwelling Units: Total duct leakage of duct system shall not exceed 12% or duct system to outside shall not exceed 6% per RA3.1.4 required for systems?	No
			Duct leakage testing per CMC Section 603.10.1 required for these systems?	Yes
11	No	The scope of the project includes only duct systems serving healthcare facilities		
12	Yes	Duct system provides conditioned air to an occupiable space for a constant volume, single zone, space-conditioning system.		
13	Yes	The space conditioning system serves less than 5,000 ft² of conditioned floor area.		
14	No	The combined surface area of the ducts is more than 25% of the total surface area of the entire duct system:		
15		The scope of the project includes extending an existing duct system, which is constructed, insulated or sealed with asbestos.		
16	No	The scope of the project includes an existing duct system that is documented to have been previously sealed as confirmed through field verification and diagnostic testing in accordance with procedures in the Reference Nonresidential Appendix NA2.		
17		All Ductwork and plenums with pressure class ratings shall be constructed to Seal Class A		
18		All ductwork is an extension of an existing duct system		
19		Ductwork serving individual dwelling unit		
20		< 25 ft of new or replacement space conditioning ducts installed		
21	R-8	Duct Insulation R-value		
22				
23				
The answers to the questions below apply to the following duct systems:		FC 1-4	**NR/ Common Use:** Duct leakage testing shall not exceed 6% per NA7.5.3 required for these systems?	No

STATE OF CALIFORNIA
Mechanical Systems
CALIFORNIA ENERGY COMMISSION

CERTIFICATE OF COMPLIANCE		NRCC-MCH-E
Project Name: COS Visalia - University Center	**Report Page:**	**(Page 77 of 113)**
	Date Prepared:	2/4/2025

L. DISTRIBUTION (DUCTWORK and PIPING)

			Dwelling Units: Total duct leakage of duct system shall not exceed 12% or duct system to outside shall not exceed 6% per RA3.1.4 required for systems?	No
			Duct leakage testing per CMC Section 603.10.1 required for these systems?	Yes
11	No	The scope of the project includes only duct systems serving healthcare facilities		
12	Yes	Duct system provides conditioned air to an occupiable space for a constant volume, single zone, space-conditioning system.		
13	Yes	The space conditioning system serves less than 5,000 ft² of conditioned floor area.		
14	No	The combined surface area of the ducts is more than 25% of the total surface area of the entire duct system:		
15		The scope of the project includes extending an existing duct system, which is constructed, insulated or sealed with asbestos.		
16	No	The scope of the project includes an existing duct system that is documented to have been previously sealed as confirmed through field verification and diagnostic testing in accordance with procedures in the Reference Nonresidential Appendix NA2.		
17		All Ductwork and plenums with pressure class ratings shall be constructed to Seal Class A		
18		All ductwork is an extension of an existing duct system		
19		Ductwork serving individual dwelling unit		
20		< 25 ft of new or replacement space conditioning ducts installed		
21	R-8	Duct Insulation R-value		
22				
23				
The answers to the questions below apply to the following duct systems:		FC 1-5	**NR/ Common Use:** Duct leakage testing shall not exceed 6% per NA7.5.3 required for these systems?	No

STATE OF CALIFORNIA
Mechanical Systems
CALIFORNIA ENERGY COMMISSION

CERTIFICATE OF COMPLIANCE		NRCC-MCH-E
Project Name: COS Visalia - University Center	**Report Page:**	**(Page 78 of 113)**
	Date Prepared:	2/4/2025

L. DISTRIBUTION (DUCTWORK and PIPING)

			Dwelling Units: Total duct leakage of duct system shall not exceed 12% or duct system to outside shall not exceed 6% per RA3.1.4 required for systems?	No
			Duct leakage testing per CMC Section 603.10.1 required for these systems?	Yes
11	No	The scope of the project includes only duct systems serving healthcare facilities		
12	Yes	Duct system provides conditioned air to an occupiable space for a constant volume, single zone, space-conditioning system.		
13	Yes	The space conditioning system serves less than 5,000 ft² of conditioned floor area.		
14	No	The combined surface area of the ducts is more than 25% of the total surface area of the entire duct system:		
15		The scope of the project includes extending an existing duct system, which is constructed, insulated or sealed with asbestos.		
16	No	The scope of the project includes an existing duct system that is documented to have been previously sealed as confirmed through field verification and diagnostic testing in accordance with procedures in the Reference Nonresidential Appendix NA2.		
17		All Ductwork and plenums with pressure class ratings shall be constructed to Seal Class A		
18		All ductwork is an extension of an existing duct system		
19		Ductwork serving individual dwelling unit		
20		< 25 ft of new or replacement space conditioning ducts installed		
21	R-8	Duct Insulation R-value		
22				
23				
The answers to the questions below apply to the following duct systems:		FC 1-6	**NR/ Common Use:** Duct leakage testing shall not exceed 6% per NA7.5.3 required for these systems?	No

STATE OF CALIFORNIA
Mechanical Systems
CALIFORNIA ENERGY COMMISSION

CERTIFICATE OF COMPLIANCE		NRCC-MCH-E
Project Name: COS Visalia - University Center	**Report Page:**	**(Page 79 of 113)**
	Date Prepared:	2/4/2025

L. DISTRIBUTION (DUCTWORK and PIPING)

			Dwelling Units: Total duct leakage of duct system shall not exceed 12% or duct system to outside shall not exceed 6% per RA3.1.4 required for systems?	No
			Duct leakage testing per CMC Section 603.10.1 required for these systems?	Yes
11	No	The scope of the project includes only duct systems serving healthcare facilities		
12	Yes	Duct system provides conditioned air to an occupiable space for a constant volume, single zone, space-conditioning system.		
13	Yes	The space conditioning system serves less than 5,000 ft² of conditioned floor area.		
14	No	The combined surface area of the ducts is more than 25% of the total surface area of the entire duct system:		
15		The scope of the project includes extending an existing duct system, which is constructed, insulated or sealed with asbestos.		
16	No	The scope of the project includes an existing duct system that is documented to have been previously sealed as confirmed through field verification and diagnostic testing in accordance with procedures in the Reference Nonresidential Appendix NA2.		
17		All Ductwork and plenums with pressure class ratings shall be constructed to Seal Class A		
18		All ductwork is an extension of an existing duct system		
19		Ductwork serving individual dwelling unit		
20		< 25 ft of new or replacement space conditioning ducts installed		
21	R-8	Duct Insulation R-value		
22				
23				
The answers to the questions below apply to the following duct systems:		FC 1-7	**NR/ Common Use:** Duct leakage testing shall not exceed 6% per NA7.5.3 required for these systems?	No

STATE OF CALIFORNIA
Mechanical Systems
CALIFORNIA ENERGY COMMISSION

CERTIFICATE OF COMPLIANCE		NRCC-MCH-E
Project Name: COS Visalia - University Center	**Report Page:**	**(Page 80 of 113)**
	Date Prepared:	2/4/2025

L. DISTRIBUTION (DUCTWORK and PIPING)

			Dwelling Units: Total duct leakage of duct system shall not exceed 12% or duct system to outside shall not exceed 6% per RA3.1.4 required for systems?	No
			Duct leakage testing per CMC Section 603.10.1 required for these systems?	Yes
11	No	The scope of the project includes only duct systems serving healthcare facilities		
12	Yes	Duct system provides conditioned air to an occupiable space for a constant volume, single zone, space-conditioning system.		
13	Yes	The space conditioning system serves less than 5,000 ft² of conditioned floor area.		
14	No	The combined surface area of the ducts is more than 25% of the total surface area of the entire duct system:		
15		The scope of the project includes extending an existing duct system, which is constructed, insulated or sealed with asbestos.		
16	No	The scope of the project includes an existing duct system that is documented to have been previously sealed as confirmed through field verification and diagnostic testing in accordance with procedures in the Reference Nonresidential Appendix NA2.		
17		All Ductwork and plenums with pressure class ratings shall be constructed to Seal Class A		
18		All ductwork is an extension of an existing duct system		
19		Ductwork serving individual dwelling unit		
20		< 25 ft of new or replacement space conditioning ducts installed		
21	R-8	Duct Insulation R-value		
22				
23				
The answers to the questions below apply to the following duct systems:		FC 1-8	**NR/ Common Use:** Duct leakage testing shall not exceed 6% per NA7.5.3 required for these systems?	No

STATE OF CALIFORNIA
Mechanical Systems
CALIFORNIA ENERGY COMMISSION

CERTIFICATE OF COMPLIANCE		NRCC-MCH-E
Project Name: COS Visalia - University Center	**Report Page:**	**(Page 81 of 113)**
	Date Prepared:	2/4/2025

L. DISTRIBUTION (DUCTWORK and PIPING)

			Dwelling Units: Total duct leakage of duct system shall not exceed 12% or duct system to outside shall not exceed 6% per RA3.1.4 required for systems?	No
			Duct leakage testing per CMC Section 603.10.1 required for these systems?	Yes
11	No	The scope of the project includes only duct systems serving healthcare facilities		
12	Yes	Duct system provides conditioned air to an occupiable space for a constant volume, single zone, space-conditioning system.		
13	Yes	The space conditioning system serves less than 5,000 ft² of conditioned floor area.		
14	No	The combined surface area of the ducts is more than 25% of the total surface area of the entire duct system:		
15		The scope of the project includes extending an existing duct system, which is constructed, insulated or sealed with asbestos.		
16	No	The scope of the project includes an existing duct system that is documented to have been previously sealed as confirmed through field verification and diagnostic testing in accordance with procedures in the Reference Nonresidential Appendix NA2.		
17		All Ductwork and plenums with pressure class ratings shall be constructed to Seal Class A		
18		All ductwork is an extension of an existing duct system		
19		Ductwork serving individual dwelling unit		
20		< 25 ft of new or replacement space conditioning ducts installed		
21	R-8	Duct Insulation R-value		
22				
23				
The answers to the questions below apply to the following duct systems:		FC 1-9	**NR/ Common Use:** Duct leakage testing shall not exceed 6% per NA7.5.3 required for these systems?	No

STATE OF CALIFORNIA
Mechanical Systems
CALIFORNIA ENERGY COMMISSION

CERTIFICATE OF COMPLIANCE		NRCC-MCH-E
Project Name: COS Visalia - University Center	**Report Page:**	**(Page 82 of 113)**
	Date Prepared:	2/4/2025

L. DISTRIBUTION (DUCTWORK and PIPING)

			Dwelling Units: Total duct leakage of duct system shall not exceed 12% or duct system to outside shall not exceed 6% per RA3.1.4 required for systems?	No
			Duct leakage testing per CMC Section 603.10.1 required for these systems?	Yes
11	No	The scope of the project includes only duct systems serving healthcare facilities		
12	Yes	Duct system provides conditioned air to an occupiable space for a constant volume, single zone, space-conditioning system.		
13	Yes	The space conditioning system serves less than 5,000 ft² of conditioned floor area.		
14	No	The combined surface area of the ducts is more than 25% of the total surface area of the entire duct system:		
15		The scope of the project includes extending an existing duct system, which is constructed, insulated or sealed with asbestos.		
16	No	The scope of the project includes an existing duct system that is documented to have been previously sealed as confirmed through field verification and diagnostic testing in accordance with procedures in the Reference Nonresidential Appendix NA2.		
17		All Ductwork and plenums with pressure class ratings shall be constructed to Seal Class A		
18		All ductwork is an extension of an existing duct system		
19		Ductwork serving individual dwelling unit		
20		< 25 ft of new or replacement space conditioning ducts installed		
21	R-8	Duct Insulation R-value		
22				
23				
The answers to the questions below apply to the following duct systems:		FC 1-10	**NR/ Common Use:** Duct leakage testing shall not exceed 6% per NA7.5.3 required for these systems?	No

STATE OF CALIFORNIA
Mechanical Systems
CALIFORNIA ENERGY COMMISSION

CERTIFICATE OF COMPLIANCE		NRCC-MCH-E
Project Name: COS Visalia - University Center	**Report Page:**	**(Page 83 of 113)**
	Date Prepared:	2/4/2025

L. DISTRIBUTION (DUCTWORK and PIPING)

			Dwelling Units: Total duct leakage of duct system shall not exceed 12% or duct system to outside shall not exceed 6% per RA3.1.4 required for systems?	No
			Duct leakage testing per CMC Section 603.10.1 required for these systems?	Yes
11	No	The scope of the project includes only duct systems serving healthcare facilities		
12	Yes	Duct system provides conditioned air to an occupiable space for a constant volume, single zone, space-conditioning system.		
13	Yes	The space conditioning system serves less than 5,000 ft² of conditioned floor area.		
14	No	The combined surface area of the ducts is more than 25% of the total surface area of the entire duct system:		
15		The scope of the project includes extending an existing duct system, which is constructed, insulated or sealed with asbestos.		
16	No	The scope of the project includes an existing duct system that is documented to have been previously sealed as confirmed through field verification and diagnostic testing in accordance with procedures in the Reference Nonresidential Appendix NA2.		
17		All Ductwork and plenums with pressure class ratings shall be constructed to Seal Class A		
18		All ductwork is an extension of an existing duct system		
19		Ductwork serving individual dwelling unit		
20		< 25 ft of new or replacement space conditioning ducts installed		
21	R-8	Duct Insulation R-value		
22				
23				
The answers to the questions below apply to the following duct systems:		FC 1-11	**NR/ Common Use:** Duct leakage testing shall not exceed 6% per NA7.5.3 required for these systems?	No

STATE OF CALIFORNIA
Mechanical Systems
CALIFORNIA ENERGY COMMISSION

CERTIFICATE OF COMPLIANCE		NRCC-MCH-E
Project Name: COS Visalia - University Center	**Report Page:**	**(Page 84 of 113)**
	Date Prepared:	2/4/2025

L. DISTRIBUTION (DUCTWORK and PIPING)

			Dwelling Units: Total duct leakage of duct system shall not exceed 12% or duct system to outside shall not exceed 6% per RA3.1.4 required for systems?	No
			Duct leakage testing per CMC Section 603.10.1 required for these systems?	Yes
11	No	The scope of the project includes only duct systems serving healthcare facilities		
12	Yes	Duct system provides conditioned air to an occupiable space for a constant volume, single zone, space-conditioning system.		
13	Yes	The space conditioning system serves less than 5,000 ft² of conditioned floor area.		
14	No	The combined surface area of the ducts is more than 25% of the total surface area of the entire duct system:		
15		The scope of the project includes extending an existing duct system, which is constructed, insulated or sealed with asbestos.		
16	No	The scope of the project includes an existing duct system that is documented to have been previously sealed as confirmed through field verification and diagnostic testing in accordance with procedures in the Reference Nonresidential Appendix NA2.		
17		All Ductwork and plenums with pressure class ratings shall be constructed to Seal Class A		
18		All ductwork is an extension of an existing duct system		
19		Ductwork serving individual dwelling unit		
20		< 25 ft of new or replacement space conditioning ducts installed		
21	R-8	Duct Insulation R-value		
22				
23				
The answers to the questions below apply to the following duct systems:		FC 1-12	**NR/ Common Use:** Duct leakage testing shall not exceed 6% per NA7.5.3 required for these systems?	No

IDENTIFICATION STAMP
DIV. OF THE STATE ARCHITECT
APP: 02-122821 INC: 2
REVIEWED FOR
SS ☑ FLS ☑ ACS ☑
DATE: 11/20/2025

Teter, Inc. expressly reserves its common law copyright and other property rights in these plans. This document, the ideas and designs incorporated herein, as an instrument of professional service, is not to be used in whole or in part, for any other project without prior written authorization.

MARK	DATE	DESCRIPTION
A	11/13/2025	DSA BACKCHECK

TETER, INC.
FRESNO HEADQUARTERS
VISALIA | BAKERSFIELD | MODESTO | SAN LUIS OBISPO
ARCHITECTS ENGINEERS CONNECTED

VISALIA CAMPUS UNIVERSITY CENTER
COLLEGE OF THE SEQUOIAS
915 S. MOONEY BLVD
VISALIA, CALIFORNIA

DRAWING TITLE
TITLE 24 DOCUMENTATION

PROJECT NO.
22-12498

DRAWING
M913.2

STATE OF CALIFORNIA
Mechanical Systems CALIFORNIA ENERGY COMMISSION

CERTIFICATE OF COMPLIANCE			NRCC-MCH-E
Project Name:	COS Visalia - University Center	**Report Page:**	**(Page 85 of 113)**
		Date Prepared:	2/4/2025

L. DISTRIBUTION (DUCTWORK and PIPING)

			Dwelling Units: Total duct leakage of duct system shall not exceed 12% or duct system to outside shall not exceed 6% per RA3.1.4 required for systems?	No
			Duct leakage testing per CMC Section 603.10.1 required for these systems?	Yes
11	No	The scope of the project includes only duct systems serving healthcare facilities		
12	Yes	Duct system provides conditioned air to an occupiable space for a constant volume, single zone, space-conditioning system.		
13	Yes	The space conditioning system serves less than 5,000 ft² of conditioned floor area.		
14	No	The combined surface area of the ducts is more than 25% of the total surface area of the entire duct system:		
15		The scope of the project includes extending an existing duct system, which is constructed, insulated or sealed with asbestos.		
16	No	The scope of the project includes an existing duct system that is documented to have been previously sealed as confirmed through field verification and diagnostic testing in accordance with procedures in the Reference Nonresidential Appendix NA2.		
17		All Ductwork and plenums with pressure class ratings shall be constructed to Seal Class A		
18		All ductwork is an extension of an existing duct system		
19		Ductwork serving individual dwelling unit		
20		< 25 ft of new or replacement space conditioning ducts installed		
21	R-8	Duct Insulation R-value		
22				
23				
The answers to the questions below apply to the following duct systems:		FC 1-13	**NR/ Common Use:** Duct leakage testing shall not exceed 6% per NA7.5.3 required for these systems?	No

STATE OF CALIFORNIA
Mechanical Systems CALIFORNIA ENERGY COMMISSION

CERTIFICATE OF COMPLIANCE			NRCC-MCH-E
Project Name:	COS Visalia - University Center	**Report Page:**	**(Page 86 of 113)**
		Date Prepared:	2/4/2025

L. DISTRIBUTION (DUCTWORK and PIPING)

			Dwelling Units: Total duct leakage of duct system shall not exceed 12% or duct system to outside shall not exceed 6% per RA3.1.4 required for systems?	No
			Duct leakage testing per CMC Section 603.10.1 required for these systems?	Yes
11	No	The scope of the project includes only duct systems serving healthcare facilities		
12	Yes	Duct system provides conditioned air to an occupiable space for a constant volume, single zone, space-conditioning system.		
13	Yes	The space conditioning system serves less than 5,000 ft² of conditioned floor area.		
14	No	The combined surface area of the ducts is more than 25% of the total surface area of the entire duct system:		
15		The scope of the project includes extending an existing duct system, which is constructed, insulated or sealed with asbestos.		
16	No	The scope of the project includes an existing duct system that is documented to have been previously sealed as confirmed through field verification and diagnostic testing in accordance with procedures in the Reference Nonresidential Appendix NA2.		
17		All Ductwork and plenums with pressure class ratings shall be constructed to Seal Class A		
18		All ductwork is an extension of an existing duct system		
19		Ductwork serving individual dwelling unit		
20		< 25 ft of new or replacement space conditioning ducts installed		
21	R-8	Duct Insulation R-value		
22				
23				
The answers to the questions below apply to the following duct systems:		FC 1-14	**NR/ Common Use:** Duct leakage testing shall not exceed 6% per NA7.5.3 required for these systems?	No

STATE OF CALIFORNIA
Mechanical Systems CALIFORNIA ENERGY COMMISSION

CERTIFICATE OF COMPLIANCE			NRCC-MCH-E
Project Name:	COS Visalia - University Center	**Report Page:**	**(Page 87 of 113)**
		Date Prepared:	2/4/2025

L. DISTRIBUTION (DUCTWORK and PIPING)

			Dwelling Units: Total duct leakage of duct system shall not exceed 12% or duct system to outside shall not exceed 6% per RA3.1.4 required for systems?	No
			Duct leakage testing per CMC Section 603.10.1 required for these systems?	Yes
11	No	The scope of the project includes only duct systems serving healthcare facilities		
12	Yes	Duct system provides conditioned air to an occupiable space for a constant volume, single zone, space-conditioning system.		
13	Yes	The space conditioning system serves less than 5,000 ft² of conditioned floor area.		
14	No	The combined surface area of the ducts is more than 25% of the total surface area of the entire duct system:		
15		The scope of the project includes extending an existing duct system, which is constructed, insulated or sealed with asbestos.		
16	No	The scope of the project includes an existing duct system that is documented to have been previously sealed as confirmed through field verification and diagnostic testing in accordance with procedures in the Reference Nonresidential Appendix NA2.		
17		All Ductwork and plenums with pressure class ratings shall be constructed to Seal Class A		
18		All ductwork is an extension of an existing duct system		
19		Ductwork serving individual dwelling unit		
20		< 25 ft of new or replacement space conditioning ducts installed		
21	R-8	Duct Insulation R-value		
22				
23				
The answers to the questions below apply to the following duct systems:		FC-15/16	**NR/ Common Use:** Duct leakage testing shall not exceed 6% per NA7.5.3 required for these systems?	No

STATE OF CALIFORNIA
Mechanical Systems CALIFORNIA ENERGY COMMISSION

CERTIFICATE OF COMPLIANCE			NRCC-MCH-E
Project Name:	COS Visalia - University Center	**Report Page:**	**(Page 88 of 113)**
		Date Prepared:	2/4/2025

L. DISTRIBUTION (DUCTWORK and PIPING)

			Dwelling Units: Total duct leakage of duct system shall not exceed 12% or duct system to outside shall not exceed 6% per RA3.1.4 required for systems?	No
			Duct leakage testing per CMC Section 603.10.1 required for these systems?	Yes
11	No	The scope of the project includes only duct systems serving healthcare facilities		
12	Yes	Duct system provides conditioned air to an occupiable space for a constant volume, single zone, space-conditioning system.		
13	Yes	The space conditioning system serves less than 5,000 ft² of conditioned floor area.		
14	No	The combined surface area of the ducts is more than 25% of the total surface area of the entire duct system:		
15		The scope of the project includes extending an existing duct system, which is constructed, insulated or sealed with asbestos.		
16	No	The scope of the project includes an existing duct system that is documented to have been previously sealed as confirmed through field verification and diagnostic testing in accordance with procedures in the Reference Nonresidential Appendix NA2.		
17		All Ductwork and plenums with pressure class ratings shall be constructed to Seal Class A		
18		All ductwork is an extension of an existing duct system		
19		Ductwork serving individual dwelling unit		
20		< 25 ft of new or replacement space conditioning ducts installed		
21	R-8	Duct Insulation R-value		
22				
23				
The answers to the questions below apply to the following duct systems:		DOAS-3 CHEM	**NR/ Common Use:** Duct leakage testing shall not exceed 6% per NA7.5.3 required for these systems?	No

STATE OF CALIFORNIA
Mechanical Systems CALIFORNIA ENERGY COMMISSION

CERTIFICATE OF COMPLIANCE			NRCC-MCH-E
Project Name:	COS Visalia - University Center	**Report Page:**	**(Page 89 of 113)**
		Date Prepared:	2/4/2025

L. DISTRIBUTION (DUCTWORK and PIPING)

			Dwelling Units: Total duct leakage of duct system shall not exceed 12% or duct system to outside shall not exceed 6% per RA3.1.4 required for systems?	No
			Duct leakage testing per CMC Section 603.10.1 required for these systems?	Yes
11	No	The scope of the project includes only duct systems serving healthcare facilities		
12	Yes	Duct system provides conditioned air to an occupiable space for a constant volume, single zone, space-conditioning system.		
13	Yes	The space conditioning system serves less than 5,000 ft² of conditioned floor area.		
14	No	The combined surface area of the ducts is more than 25% of the total surface area of the entire duct system:		
15		The scope of the project includes extending an existing duct system, which is constructed, insulated or sealed with asbestos.		
16	No	The scope of the project includes an existing duct system that is documented to have been previously sealed as confirmed through field verification and diagnostic testing in accordance with procedures in the Reference Nonresidential Appendix NA2.		
17		All Ductwork and plenums with pressure class ratings shall be constructed to Seal Class A		
18		All ductwork is an extension of an existing duct system		
19		Ductwork serving individual dwelling unit		
20		< 25 ft of new or replacement space conditioning ducts installed		
21	R-8	Duct Insulation R-value		
22				
23				
The answers to the questions below apply to the following duct systems:		FC 2-1	**NR/ Common Use:** Duct leakage testing shall not exceed 6% per NA7.5.3 required for these systems?	No

STATE OF CALIFORNIA
Mechanical Systems CALIFORNIA ENERGY COMMISSION

CERTIFICATE OF COMPLIANCE			NRCC-MCH-E
Project Name:	COS Visalia - University Center	**Report Page:**	**(Page 90 of 113)**
		Date Prepared:	2/4/2025

L. DISTRIBUTION (DUCTWORK and PIPING)

			Dwelling Units: Total duct leakage of duct system shall not exceed 12% or duct system to outside shall not exceed 6% per RA3.1.4 required for systems?	No
			Duct leakage testing per CMC Section 603.10.1 required for these systems?	Yes
11	No	The scope of the project includes only duct systems serving healthcare facilities		
12	Yes	Duct system provides conditioned air to an occupiable space for a constant volume, single zone, space-conditioning system.		
13	Yes	The space conditioning system serves less than 5,000 ft² of conditioned floor area.		
14	No	The combined surface area of the ducts is more than 25% of the total surface area of the entire duct system:		
15		The scope of the project includes extending an existing duct system, which is constructed, insulated or sealed with asbestos.		
16	No	The scope of the project includes an existing duct system that is documented to have been previously sealed as confirmed through field verification and diagnostic testing in accordance with procedures in the Reference Nonresidential Appendix NA2.		
17		All Ductwork and plenums with pressure class ratings shall be constructed to Seal Class A		
18		All ductwork is an extension of an existing duct system		
19		Ductwork serving individual dwelling unit		
20		< 25 ft of new or replacement space conditioning ducts installed		
21	R-8	Duct Insulation R-value		
22				
23				
The answers to the questions below apply to the following duct systems:		FC 2-2	**NR/ Common Use:** Duct leakage testing shall not exceed 6% per NA7.5.3 required for these systems?	No

STATE OF CALIFORNIA
Mechanical Systems CALIFORNIA ENERGY COMMISSION

CERTIFICATE OF COMPLIANCE			NRCC-MCH-E
Project Name:	COS Visalia - University Center	**Report Page:**	**(Page 91 of 113)**
		Date Prepared:	2/4/2025

L. DISTRIBUTION (DUCTWORK and PIPING)

			Dwelling Units: Total duct leakage of duct system shall not exceed 12% or duct system to outside shall not exceed 6% per RA3.1.4 required for systems?	No
			Duct leakage testing per CMC Section 603.10.1 required for these systems?	Yes
11	No	The scope of the project includes only duct systems serving healthcare facilities		
12	Yes	Duct system provides conditioned air to an occupiable space for a constant volume, single zone, space-conditioning system.		
13	Yes	The space conditioning system serves less than 5,000 ft² of conditioned floor area.		
14	No	The combined surface area of the ducts is more than 25% of the total surface area of the entire duct system:		
15		The scope of the project includes extending an existing duct system, which is constructed, insulated or sealed with asbestos.		
16	No	The scope of the project includes an existing duct system that is documented to have been previously sealed as confirmed through field verification and diagnostic testing in accordance with procedures in the Reference Nonresidential Appendix NA2.		
17		All Ductwork and plenums with pressure class ratings shall be constructed to Seal Class A		
18		All ductwork is an extension of an existing duct system		
19		Ductwork serving individual dwelling unit		
20		< 25 ft of new or replacement space conditioning ducts installed		
21	R-8	Duct Insulation R-value		
22				
23				
The answers to the questions below apply to the following duct systems:		FC 2-3	**NR/ Common Use:** Duct leakage testing shall not exceed 6% per NA7.5.3 required for these systems?	No

STATE OF CALIFORNIA
Mechanical Systems CALIFORNIA ENERGY COMMISSION

CERTIFICATE OF COMPLIANCE			NRCC-MCH-E
Project Name:	COS Visalia - University Center	**Report Page:**	**(Page 92 of 113)**
		Date Prepared:	2/4/2025

L. DISTRIBUTION (DUCTWORK and PIPING)

			Dwelling Units: Total duct leakage of duct system shall not exceed 12% or duct system to outside shall not exceed 6% per RA3.1.4 required for systems?	No
			Duct leakage testing per CMC Section 603.10.1 required for these systems?	Yes
11	No	The scope of the project includes only duct systems serving healthcare facilities		
12	Yes	Duct system provides conditioned air to an occupiable space for a constant volume, single zone, space-conditioning system.		
13	Yes	The space conditioning system serves less than 5,000 ft² of conditioned floor area.		
14	No	The combined surface area of the ducts is more than 25% of the total surface area of the entire duct system:		
15		The scope of the project includes extending an existing duct system, which is constructed, insulated or sealed with asbestos.		
16	No	The scope of the project includes an existing duct system that is documented to have been previously sealed as confirmed through field verification and diagnostic testing in accordance with procedures in the Reference Nonresidential Appendix NA2.		
17		All Ductwork and plenums with pressure class ratings shall be constructed to Seal Class A		
18		All ductwork is an extension of an existing duct system		
19		Ductwork serving individual dwelling unit		
20		< 25 ft of new or replacement space conditioning ducts installed		
21	R-8	Duct Insulation R-value		
22				
23				
The answers to the questions below apply to the following duct systems:		FC 2-4	**NR/ Common Use:** Duct leakage testing shall not exceed 6% per NA7.5.3 required for these systems?	No

STATE OF CALIFORNIA
Mechanical Systems CALIFORNIA ENERGY COMMISSION

CERTIFICATE OF COMPLIANCE			NRCC-MCH-E
Project Name:	COS Visalia - University Center	**Report Page:**	**(Page 93 of 113)**
		Date Prepared:	2/4/2025

L. DISTRIBUTION (DUCTWORK and PIPING)

			Dwelling Units: Total duct leakage of duct system shall not exceed 12% or duct system to outside shall not exceed 6% per RA3.1.4 required for systems?	No
			Duct leakage testing per CMC Section 603.10.1 required for these systems?	Yes
11	No	The scope of the project includes only duct systems serving healthcare facilities		
12	Yes	Duct system provides conditioned air to an occupiable space for a constant volume, single zone, space-conditioning system.		
13	Yes	The space conditioning system serves less than 5,000 ft² of conditioned floor area.		
14	No	The combined surface area of the ducts is more than 25% of the total surface area of the entire duct system:		
15		The scope of the project includes extending an existing duct system, which is constructed, insulated or sealed with asbestos.		
16	No	The scope of the project includes an existing duct system that is documented to have been previously sealed as confirmed through field verification and diagnostic testing in accordance with procedures in the Reference Nonresidential Appendix NA2.		
17		All Ductwork and plenums with pressure class ratings shall be constructed to Seal Class A		
18		All ductwork is an extension of an existing duct system		
19		Ductwork serving individual dwelling unit		
20		< 25 ft of new or replacement space conditioning ducts installed		
21	R-8	Duct Insulation R-value		
22				
23				
The answers to the questions below apply to the following duct systems:		FC 2-5	**NR/ Common Use:** Duct leakage testing shall not exceed 6% per NA7.5.3 required for these systems?	No

IDENTIFICATION STAMP
DIV. OF THE STATE ARCHITECT
APP: 02-122821 INC: 2
REVIEWED FOR
SS ☑ FLS ☑ ACS ☑
DATE: 11/20/2025

Teter, Inc. expressly reserves its common law copyright and other property rights in these plans. This document, the ideas and designs incorporated herein, as an instrument of professional service, is not to be used in whole or in part, for any other project without prior written authorization.

MARK	DATE	DESCRIPTION
A	11/13/2025	DSA BACKCHECK

TETER, INC.
FRESNO HEADQUARTERS
VISALIA | BAKERSFIELD | MODESTO | SAN LUIS OBISPO
ARCHITECTS ENGINEERS CONNECTED

VISALIA CAMPUS UNIVERSITY CENTER
COLLEGE OF THE SEQUOIAS
915 S. MOONEY BLVD
VISALIA, CALIFORNIA

DRAWING TITLE
TITLE 24 DOCUMENTATION

PROJECT NO.
22-12498

DRAWING
M914.2

\\tet-file-1\Users\zachary.davis_TETR\Documents\12498-M-UC_zachary.davis@WYRV.rvt
PLOT DATE: 8/19/2025 10:23:23 PM

STATE OF CALIFORNIA
Mechanical Systems CALIFORNIA ENERGY COMMISSION

CERTIFICATE OF COMPLIANCE		NRCC-MCH-E
Project Name: COS Visalia - University Center	**Report Page:**	**(Page 94 of 113)**
	Date Prepared:	2/4/2025

L. DISTRIBUTION (DUCTWORK and PIPING)

		Dwelling Units: Total duct leakage of duct system shall not exceed 12% or duct system to outside shall not exceed 6% per RA3.1.4 required for systems?	No
		Duct leakage testing per CMC Section 603.10.1 required for these systems?	Yes
11	No	The scope of the project includes only duct systems serving healthcare facilities	
12	Yes	Duct system provides conditioned air to an occupiable space for a constant volume, single zone, space-conditioning system.	
13	Yes	The space conditioning system serves less than 5,000 ft² of conditioned floor area.	
14	No	The combined surface area of the ducts is more than 25% of the total surface area of the entire duct system:	
15		The scope of the project includes extending an existing duct system, which is constructed, insulated or sealed with asbestos.	
16	No	The scope of the project includes an existing duct system that is documented to have been previously sealed as confirmed through field verification and diagnostic testing in accordance with procedures in the Reference Nonresidential Appendix NA2.	
17		All Ductwork and plenums with pressure class ratings shall be constructed to Seal Class A	
18		All ductwork is an extension of an existing duct system	
19		Ductwork serving individual dwelling unit	
20		< 25 ft of new or replacement space conditioning ducts installed	
21	R-8	Duct Insulation R-value	
22			
23			
The answers to the questions below apply to the following duct systems:	FC 2-6	**NR/ Common Use:** Duct leakage testing shall not exceed 6% per NA7.5.3 required for these systems?	No

STATE OF CALIFORNIA
Mechanical Systems CALIFORNIA ENERGY COMMISSION

CERTIFICATE OF COMPLIANCE		NRCC-MCH-E
Project Name: COS Visalia - University Center	**Report Page:**	**(Page 95 of 113)**
	Date Prepared:	2/4/2025

L. DISTRIBUTION (DUCTWORK and PIPING)

		Dwelling Units: Total duct leakage of duct system shall not exceed 12% or duct system to outside shall not exceed 6% per RA3.1.4 required for systems?	No
		Duct leakage testing per CMC Section 603.10.1 required for these systems?	Yes
11	No	The scope of the project includes only duct systems serving healthcare facilities	
12	Yes	Duct system provides conditioned air to an occupiable space for a constant volume, single zone, space-conditioning system.	
13	Yes	The space conditioning system serves less than 5,000 ft² of conditioned floor area.	
14	No	The combined surface area of the ducts is more than 25% of the total surface area of the entire duct system:	
15		The scope of the project includes extending an existing duct system, which is constructed, insulated or sealed with asbestos.	
16	No	The scope of the project includes an existing duct system that is documented to have been previously sealed as confirmed through field verification and diagnostic testing in accordance with procedures in the Reference Nonresidential Appendix NA2.	
17		All Ductwork and plenums with pressure class ratings shall be constructed to Seal Class A	
18		All ductwork is an extension of an existing duct system	
19		Ductwork serving individual dwelling unit	
20		< 25 ft of new or replacement space conditioning ducts installed	
21	R-8	Duct Insulation R-value	
22			
23			
The answers to the questions below apply to the following duct systems:	FC 2-7	**NR/ Common Use:** Duct leakage testing shall not exceed 6% per NA7.5.3 required for these systems?	No

STATE OF CALIFORNIA
Mechanical Systems CALIFORNIA ENERGY COMMISSION

CERTIFICATE OF COMPLIANCE		NRCC-MCH-E
Project Name: COS Visalia - University Center	**Report Page:**	**(Page 96 of 113)**
	Date Prepared:	2/4/2025

L. DISTRIBUTION (DUCTWORK and PIPING)

		Dwelling Units: Total duct leakage of duct system shall not exceed 12% or duct system to outside shall not exceed 6% per RA3.1.4 required for systems?	No
		Duct leakage testing per CMC Section 603.10.1 required for these systems?	Yes
11	No	The scope of the project includes only duct systems serving healthcare facilities	
12	Yes	Duct system provides conditioned air to an occupiable space for a constant volume, single zone, space-conditioning system.	
13	Yes	The space conditioning system serves less than 5,000 ft² of conditioned floor area.	
14	No	The combined surface area of the ducts is more than 25% of the total surface area of the entire duct system:	
15		The scope of the project includes extending an existing duct system, which is constructed, insulated or sealed with asbestos.	
16	No	The scope of the project includes an existing duct system that is documented to have been previously sealed as confirmed through field verification and diagnostic testing in accordance with procedures in the Reference Nonresidential Appendix NA2.	
17		All Ductwork and plenums with pressure class ratings shall be constructed to Seal Class A	
18		All ductwork is an extension of an existing duct system	
19		Ductwork serving individual dwelling unit	
20		< 25 ft of new or replacement space conditioning ducts installed	
21	R-8	Duct Insulation R-value	
22			
23			
The answers to the questions below apply to the following duct systems:	FC 2-8	**NR/ Common Use:** Duct leakage testing shall not exceed 6% per NA7.5.3 required for these systems?	No

STATE OF CALIFORNIA
Mechanical Systems CALIFORNIA ENERGY COMMISSION

CERTIFICATE OF COMPLIANCE		NRCC-MCH-E
Project Name: COS Visalia - University Center	**Report Page:**	**(Page 97 of 113)**
	Date Prepared:	2/4/2025

L. DISTRIBUTION (DUCTWORK and PIPING)

		Dwelling Units: Total duct leakage of duct system shall not exceed 12% or duct system to outside shall not exceed 6% per RA3.1.4 required for systems?	No
		Duct leakage testing per CMC Section 603.10.1 required for these systems?	Yes
11	No	The scope of the project includes only duct systems serving healthcare facilities	
12	Yes	Duct system provides conditioned air to an occupiable space for a constant volume, single zone, space-conditioning system.	
13	Yes	The space conditioning system serves less than 5,000 ft² of conditioned floor area.	
14	No	The combined surface area of the ducts is more than 25% of the total surface area of the entire duct system:	
15		The scope of the project includes extending an existing duct system, which is constructed, insulated or sealed with asbestos.	
16	No	The scope of the project includes an existing duct system that is documented to have been previously sealed as confirmed through field verification and diagnostic testing in accordance with procedures in the Reference Nonresidential Appendix NA2.	
17		All Ductwork and plenums with pressure class ratings shall be constructed to Seal Class A	
18		All ductwork is an extension of an existing duct system	
19		Ductwork serving individual dwelling unit	
20		< 25 ft of new or replacement space conditioning ducts installed	
21	R-8	Duct Insulation R-value	
22			
23			
The answers to the questions below apply to the following duct systems:	FC 2-9	**NR/ Common Use:** Duct leakage testing shall not exceed 6% per NA7.5.3 required for these systems?	No

STATE OF CALIFORNIA
Mechanical Systems CALIFORNIA ENERGY COMMISSION

CERTIFICATE OF COMPLIANCE		NRCC-MCH-E
Project Name: COS Visalia - University Center	**Report Page:**	**(Page 98 of 113)**
	Date Prepared:	2/4/2025

L. DISTRIBUTION (DUCTWORK and PIPING)

		Dwelling Units: Total duct leakage of duct system shall not exceed 12% or duct system to outside shall not exceed 6% per RA3.1.4 required for systems?	No
		Duct leakage testing per CMC Section 603.10.1 required for these systems?	Yes
11	No	The scope of the project includes only duct systems serving healthcare facilities	
12	Yes	Duct system provides conditioned air to an occupiable space for a constant volume, single zone, space-conditioning system.	
13	Yes	The space conditioning system serves less than 5,000 ft² of conditioned floor area.	
14	No	The combined surface area of the ducts is more than 25% of the total surface area of the entire duct system:	
15		The scope of the project includes extending an existing duct system, which is constructed, insulated or sealed with asbestos.	
16	No	The scope of the project includes an existing duct system that is documented to have been previously sealed as confirmed through field verification and diagnostic testing in accordance with procedures in the Reference Nonresidential Appendix NA2.	
17		All Ductwork and plenums with pressure class ratings shall be constructed to Seal Class A	
18		All ductwork is an extension of an existing duct system	
19		Ductwork serving individual dwelling unit	
20		< 25 ft of new or replacement space conditioning ducts installed	
21	R-8	Duct Insulation R-value	
22			
23			
The answers to the questions below apply to the following duct systems:	FC 2-10	**NR/ Common Use:** Duct leakage testing shall not exceed 6% per NA7.5.3 required for these systems?	No

STATE OF CALIFORNIA
Mechanical Systems CALIFORNIA ENERGY COMMISSION

CERTIFICATE OF COMPLIANCE		NRCC-MCH-E
Project Name: COS Visalia - University Center	**Report Page:**	**(Page 99 of 113)**
	Date Prepared:	2/4/2025

L. DISTRIBUTION (DUCTWORK and PIPING)

		Dwelling Units: Total duct leakage of duct system shall not exceed 12% or duct system to outside shall not exceed 6% per RA3.1.4 required for systems?	No
		Duct leakage testing per CMC Section 603.10.1 required for these systems?	Yes
11	No	The scope of the project includes only duct systems serving healthcare facilities	
12	Yes	Duct system provides conditioned air to an occupiable space for a constant volume, single zone, space-conditioning system.	
13	Yes	The space conditioning system serves less than 5,000 ft² of conditioned floor area.	
14	No	The combined surface area of the ducts is more than 25% of the total surface area of the entire duct system:	
15		The scope of the project includes extending an existing duct system, which is constructed, insulated or sealed with asbestos.	
16	No	The scope of the project includes an existing duct system that is documented to have been previously sealed as confirmed through field verification and diagnostic testing in accordance with procedures in the Reference Nonresidential Appendix NA2.	
17		All Ductwork and plenums with pressure class ratings shall be constructed to Seal Class A	
18		All ductwork is an extension of an existing duct system	
19		Ductwork serving individual dwelling unit	
20		< 25 ft of new or replacement space conditioning ducts installed	
21	R-8	Duct Insulation R-value	
22			
23			
The answers to the questions below apply to the following duct systems:	FC 2-11	**NR/ Common Use:** Duct leakage testing shall not exceed 6% per NA7.5.3 required for these systems?	No

STATE OF CALIFORNIA
Mechanical Systems CALIFORNIA ENERGY COMMISSION

CERTIFICATE OF COMPLIANCE		NRCC-MCH-E
Project Name: COS Visalia - University Center	**Report Page:**	**(Page 100 of 113)**
	Date Prepared:	2/4/2025

L. DISTRIBUTION (DUCTWORK and PIPING)

		Dwelling Units: Total duct leakage of duct system shall not exceed 12% or duct system to outside shall not exceed 6% per RA3.1.4 required for systems?	No
		Duct leakage testing per CMC Section 603.10.1 required for these systems?	Yes
11	No	The scope of the project includes only duct systems serving healthcare facilities	
12	Yes	Duct system provides conditioned air to an occupiable space for a constant volume, single zone, space-conditioning system.	
13	Yes	The space conditioning system serves less than 5,000 ft² of conditioned floor area.	
14	No	The combined surface area of the ducts is more than 25% of the total surface area of the entire duct system:	
15		The scope of the project includes extending an existing duct system, which is constructed, insulated or sealed with asbestos.	
16	No	The scope of the project includes an existing duct system that is documented to have been previously sealed as confirmed through field verification and diagnostic testing in accordance with procedures in the Reference Nonresidential Appendix NA2.	
17		All Ductwork and plenums with pressure class ratings shall be constructed to Seal Class A	
18		All ductwork is an extension of an existing duct system	
19		Ductwork serving individual dwelling unit	
20		< 25 ft of new or replacement space conditioning ducts installed	
21	R-8	Duct Insulation R-value	
22			
23			
The answers to the questions below apply to the following duct systems:	FC 2-12	**NR/ Common Use:** Duct leakage testing shall not exceed 6% per NA7.5.3 required for these systems?	No

STATE OF CALIFORNIA
Mechanical Systems CALIFORNIA ENERGY COMMISSION

CERTIFICATE OF COMPLIANCE		NRCC-MCH-E
Project Name: COS Visalia - University Center	**Report Page:**	**(Page 101 of 113)**
	Date Prepared:	2/4/2025

L. DISTRIBUTION (DUCTWORK and PIPING)

		Dwelling Units: Total duct leakage of duct system shall not exceed 12% or duct system to outside shall not exceed 6% per RA3.1.4 required for systems?	No
		Duct leakage testing per CMC Section 603.10.1 required for these systems?	Yes
11	No	The scope of the project includes only duct systems serving healthcare facilities	
12	Yes	Duct system provides conditioned air to an occupiable space for a constant volume, single zone, space-conditioning system.	
13	Yes	The space conditioning system serves less than 5,000 ft² of conditioned floor area.	
14	No	The combined surface area of the ducts is more than 25% of the total surface area of the entire duct system:	
15		The scope of the project includes extending an existing duct system, which is constructed, insulated or sealed with asbestos.	
16	No	The scope of the project includes an existing duct system that is documented to have been previously sealed as confirmed through field verification and diagnostic testing in accordance with procedures in the Reference Nonresidential Appendix NA2.	
17		All Ductwork and plenums with pressure class ratings shall be constructed to Seal Class A	
18		All ductwork is an extension of an existing duct system	
19		Ductwork serving individual dwelling unit	
20		< 25 ft of new or replacement space conditioning ducts installed	
21	R-8	Duct Insulation R-value	
22			
23			
The answers to the questions below apply to the following duct systems:	IDU-ODU-1	**NR/ Common Use:** Duct leakage testing shall not exceed 6% per NA7.5.3 required for these systems?	No

STATE OF CALIFORNIA
Mechanical Systems CALIFORNIA ENERGY COMMISSION

CERTIFICATE OF COMPLIANCE		NRCC-MCH-E
Project Name: COS Visalia - University Center	**Report Page:**	**(Page 102 of 113)**
	Date Prepared:	2/4/2025

L. DISTRIBUTION (DUCTWORK and PIPING)

		Dwelling Units: Total duct leakage of duct system shall not exceed 12% or duct system to outside shall not exceed 6% per RA3.1.4 required for systems?	No
		Duct leakage testing per CMC Section 603.10.1 required for these systems?	Yes
11	No	The scope of the project includes only duct systems serving healthcare facilities	
12	Yes	Duct system provides conditioned air to an occupiable space for a constant volume, single zone, space-conditioning system.	
13	Yes	The space conditioning system serves less than 5,000 ft² of conditioned floor area.	
14	No	The combined surface area of the ducts is more than 25% of the total surface area of the entire duct system:	
15		The scope of the project includes extending an existing duct system, which is constructed, insulated or sealed with asbestos.	
16	No	The scope of the project includes an existing duct system that is documented to have been previously sealed as confirmed through field verification and diagnostic testing in accordance with procedures in the Reference Nonresidential Appendix NA2.	
17		All Ductwork and plenums with pressure class ratings shall be constructed to Seal Class A	
18		All ductwork is an extension of an existing duct system	
19		Ductwork serving individual dwelling unit	
20		< 25 ft of new or replacement space conditioning ducts installed	
21	R-8	Duct Insulation R-value	
22			
23			
The answers to the questions below apply to the following duct systems:	IDU-ODU-4	**NR/ Common Use:** Duct leakage testing shall not exceed 6% per NA7.5.3 required for these systems?	No

IDENTIFICATION STAMP
DIV. OF THE STATE ARCHITECT
APP: 02-122821 INC: 2
REVIEWED FOR
SS ☑ FLS ☑ ACS ☑
DATE: 11/20/2025

Teter, Inc. expressly reserves its common law copyright and other property rights in these plans. This document, the ideas and designs incorporated herein, as an instrument of professional service, is not to be used in whole or in part, for any other project without prior written authorization.

MARK	DATE	DESCRIPTION
A	11/13/2025	DSA BACKCHECK

TETER, INC.
FRESNO HEADQUARTERS
VISALIA | BAKERSFIELD | MODESTO | SAN LUIS OBISPO
ARCHITECTS ENGINEERS CONNECTED

VISALIA CAMPUS UNIVERSITY CENTER
COLLEGE OF THE SEQUOIAS
915 S. MOONEY BLVD
VISALIA, CALIFORNIA

DRAWING TITLE
TITLE 24 DOCUMENTATION

PROJECT NO.
22-12498

DRAWING
M915.2

\\tet-file-1\Users\zachary.davis_TETR\Documents\12498-M-UC_zachary.davis8WYRV.rvt
PLOT DATE: 8/19/2025 10:23:28 PM

\\tet-file-1\Users\zachary.davis_TETR\Documents\12498-M-UC_zachary.davisBWYRV.rvt
1/8" 1/0" 1'
PLOT DATE: 8/19/2025 10:23:33 PM

STATE OF CALIFORNIA
Mechanical Systems
CALIFORNIA ENERGY COMMISSION

CERTIFICATE OF COMPLIANCE		NRCC-MCH-E
Project Name: COS Visalia - University Center	**Report Page:**	**(Page 103 of 113)**
	Date Prepared:	2/4/2025

L. DISTRIBUTION (DUCTWORK and PIPING)

			Dwelling Units: Total duct leakage of duct system shall not exceed 12% or duct system to outside shall not exceed 6% per RA3.1.4 required for systems?	No
			Duct leakage testing per CMC Section 603.10.1 required for these systems?	Yes
11	No	The scope of the project includes only duct systems serving healthcare facilities		
12	Yes	Duct system provides conditioned air to an occupiable space for a constant volume, single zone, space-conditioning system.		
13	Yes	The space conditioning system serves less than 5,000 ft² of conditioned floor area.		
14	No	The combined surface area of the ducts is more than 25% of the total surface area of the entire duct system:		
15		The scope of the project includes extending an existing duct system, which is constructed, insulated or sealed with asbestos.		
16	No	The scope of the project includes an existing duct system that is documented to have been previously sealed as confirmed through field verification and diagnostic testing in accordance with procedures in the Reference Nonresidential Appendix NA2.		
17		All Ductwork and plenums with pressure class ratings shall be constructed to Seal Class A		
18		All ductwork is an extension of an existing duct system		
19		Ductwork serving individual dwelling unit		
20		< 25 ft of new or replacement space conditioning ducts installed		
21	R-8	Duct Insulation R-value		
22				
23				
The answers to the questions below apply to the following duct systems:		IDU-ODU-2 1st flr data	**NR/ Common Use:** Duct leakage testing shall not exceed 6% per NA7.5.3 required for these systems?	No

STATE OF CALIFORNIA
Mechanical Systems
CALIFORNIA ENERGY COMMISSION

CERTIFICATE OF COMPLIANCE		NRCC-MCH-E
Project Name: COS Visalia - University Center	**Report Page:**	**(Page 104 of 113)**
	Date Prepared:	2/4/2025

L. DISTRIBUTION (DUCTWORK and PIPING)

			Dwelling Units: Total duct leakage of duct system shall not exceed 12% or duct system to outside shall not exceed 6% per RA3.1.4 required for systems?	No
			Duct leakage testing per CMC Section 603.10.1 required for these systems?	Yes
11	No	The scope of the project includes only duct systems serving healthcare facilities		
12	Yes	Duct system provides conditioned air to an occupiable space for a constant volume, single zone, space-conditioning system.		
13	Yes	The space conditioning system serves less than 5,000 ft² of conditioned floor area.		
14	No	The combined surface area of the ducts is more than 25% of the total surface area of the entire duct system:		
15		The scope of the project includes extending an existing duct system, which is constructed, insulated or sealed with asbestos.		
16	No	The scope of the project includes an existing duct system that is documented to have been previously sealed as confirmed through field verification and diagnostic testing in accordance with procedures in the Reference Nonresidential Appendix NA2.		
17		All Ductwork and plenums with pressure class ratings shall be constructed to Seal Class A		
18		All ductwork is an extension of an existing duct system		
19		Ductwork serving individual dwelling unit		
20		< 25 ft of new or replacement space conditioning ducts installed		
21	R-8	Duct Insulation R-value		
22				
23				
The answers to the questions below apply to the following duct systems:		IDU-ODU-3 1st flr elec	**NR/ Common Use:** Duct leakage testing shall not exceed 6% per NA7.5.3 required for these systems?	No

STATE OF CALIFORNIA
Mechanical Systems
CALIFORNIA ENERGY COMMISSION

CERTIFICATE OF COMPLIANCE		NRCC-MCH-E
Project Name: COS Visalia - University Center	**Report Page:**	**(Page 105 of 113)**
	Date Prepared:	2/4/2025

L. DISTRIBUTION (DUCTWORK and PIPING)

			Dwelling Units: Total duct leakage of duct system shall not exceed 12% or duct system to outside shall not exceed 6% per RA3.1.4 required for systems?	No
			Duct leakage testing per CMC Section 603.10.1 required for these systems?	Yes
11	No	The scope of the project includes only duct systems serving healthcare facilities		
12	Yes	Duct system provides conditioned air to an occupiable space for a constant volume, single zone, space-conditioning system.		
13	Yes	The space conditioning system serves less than 5,000 ft² of conditioned floor area.		
14	No	The combined surface area of the ducts is more than 25% of the total surface area of the entire duct system:		
15		The scope of the project includes extending an existing duct system, which is constructed, insulated or sealed with asbestos.		
16	No	The scope of the project includes an existing duct system that is documented to have been previously sealed as confirmed through field verification and diagnostic testing in accordance with procedures in the Reference Nonresidential Appendix NA2.		
17		All Ductwork and plenums with pressure class ratings shall be constructed to Seal Class A		
18		All ductwork is an extension of an existing duct system		
19		Ductwork serving individual dwelling unit		
20		< 25 ft of new or replacement space conditioning ducts installed		
21	R-8	Duct Insulation R-value		
22				
23				
The answers to the questions below apply to the following duct systems:		IDU-ODU-5 2nd flr data	**NR/ Common Use:** Duct leakage testing shall not exceed 6% per NA7.5.3 required for these systems?	No

STATE OF CALIFORNIA
Mechanical Systems
CALIFORNIA ENERGY COMMISSION

CERTIFICATE OF COMPLIANCE		NRCC-MCH-E
Project Name: COS Visalia - University Center	**Report Page:**	**(Page 106 of 113)**
	Date Prepared:	2/4/2025

L. DISTRIBUTION (DUCTWORK and PIPING)

			Dwelling Units: Total duct leakage of duct system shall not exceed 12% or duct system to outside shall not exceed 6% per RA3.1.4 required for systems?	No
			Duct leakage testing per CMC Section 603.10.1 required for these systems?	Yes
11	No	The scope of the project includes only duct systems serving healthcare facilities		
12	Yes	Duct system provides conditioned air to an occupiable space for a constant volume, single zone, space-conditioning system.		
13	Yes	The space conditioning system serves less than 5,000 ft² of conditioned floor area.		
14	No	The combined surface area of the ducts is more than 25% of the total surface area of the entire duct system:		
15		The scope of the project includes extending an existing duct system, which is constructed, insulated or sealed with asbestos.		
16	No	The scope of the project includes an existing duct system that is documented to have been previously sealed as confirmed through field verification and diagnostic testing in accordance with procedures in the Reference Nonresidential Appendix NA2.		
17		All Ductwork and plenums with pressure class ratings shall be constructed to Seal Class A		
18		All ductwork is an extension of an existing duct system		
19		Ductwork serving individual dwelling unit		
20		< 25 ft of new or replacement space conditioning ducts installed		
21	R-8	Duct Insulation R-value		
22				
23				
The answers to the questions below apply to the following duct systems:		IDU-ODU-6 2nd flr elec	**NR/ Common Use:** Duct leakage testing shall not exceed 6% per NA7.5.3 required for these systems?	No

STATE OF CALIFORNIA
Mechanical Systems
CALIFORNIA ENERGY COMMISSION

CERTIFICATE OF COMPLIANCE		NRCC-MCH-E
Project Name: COS Visalia - University Center	**Report Page:**	**(Page 107 of 113)**
	Date Prepared:	2/4/2025

L. DISTRIBUTION (DUCTWORK and PIPING)

			Dwelling Units: Total duct leakage of duct system shall not exceed 12% or duct system to outside shall not exceed 6% per RA3.1.4 required for systems?	No
			Duct leakage testing per CMC Section 603.10.1 required for these systems?	Yes
11	No	The scope of the project includes only duct systems serving healthcare facilities		
12	Yes	Duct system provides conditioned air to an occupiable space for a constant volume, single zone, space-conditioning system.		
13	Yes	The space conditioning system serves less than 5,000 ft² of conditioned floor area.		
14	No	The combined surface area of the ducts is more than 25% of the total surface area of the entire duct system:		
15		The scope of the project includes extending an existing duct system, which is constructed, insulated or sealed with asbestos.		
16	No	The scope of the project includes an existing duct system that is documented to have been previously sealed as confirmed through field verification and diagnostic testing in accordance with procedures in the Reference Nonresidential Appendix NA2.		
17		All Ductwork and plenums with pressure class ratings shall be constructed to Seal Class A		
18		All ductwork is an extension of an existing duct system		
19		Ductwork serving individual dwelling unit		
20		< 25 ft of new or replacement space conditioning ducts installed		
21	R-8	Duct Insulation R-value		
22				
23				

M. COOLING TOWERS

This section does not apply to this project.

STATE OF CALIFORNIA
Mechanical Systems
CALIFORNIA ENERGY COMMISSION

CERTIFICATE OF COMPLIANCE		NRCC-MCH-E
Project Name: COS Visalia - University Center	**Report Page:**	**(Page 108 of 113)**
	Date Prepared:	2/4/2025

N. DECLARATION OF REQUIRED CERTIFICATES OF INSTALLATION

Selections have been made based on information provided in previous tables of this document. If any selection needs to be changed, please explain why in Table E Additional Remarks. These documents must be provided to the building inspector during construction and can be found online at https://www.energy.ca.gov/title24/2019standards/2019_compliance_documents/Nonresidential_Documents/NRCI/

Form/Title
NRCI-MCH-01-E - Must be submitted for all buildings

STATE OF CALIFORNIA
Mechanical Systems
CALIFORNIA ENERGY COMMISSION

CERTIFICATE OF COMPLIANCE		NRCC-MCH-E
Project Name: COS Visalia - University Center	**Report Page:**	**(Page 109 of 113)**
	Date Prepared:	2/4/2025

O. DECLARATION OF REQUIRED CERTIFICATES OF ACCEPTANCE

Selections have been made based on information provided in previous tables of this document. If any selection needs to be changed, please explain why in Table E Additional Remarks. These documents must be provided to the building inspector during construction and can be found online at https://www.energy.ca.gov/title24/2019standards/2019_compliance_documents/Nonresidential_Documents/NRCA/

Form/Title	Systems/Spaces To Be Field Verified
NRCA-MCH-02-A - Outdoor Air must be submitted for all newly installed HVAC units. Note: MCH-02-A can be performed in conjunction with MCH-07-A Supply Fan VFD Acceptance (if applicable) since testing activities overlap.	AH-1; FC 1-1; FC 1-2; FC 1-3; FC 1-4; FC 1-5; FC 1-6; FC 1-7; FC 1-8; FC 1-9; FC 1-10; FC 1-11; FC 1-12; FC 1-13; FC 1-14; FC 1-15-16; DOAS-3; FC 2-1; FC 2-2; FC 2-3; FC 2-4; FC 2-5; FC 2-6; FC 2-7; FC 2-8; FC 2-9; FC 2-10; FC 2-11; FC 2-12; IDU-ODU-1; IDU-ODU-4; IDU-ODU-2; IDU-ODU-3; IDU-ODU-5; IDU-ODU-6;
NRCA-MCH-03-A - Constant Volume Single Zone HVAC NOTE: This form does not automatically move to "Yes". If Constant Volume Single Zone HVAC Systems are included in the scope, permit applicant should move this form to "Yes".	IDU-ODU-1; IDU-ODU-4; IDU-ODU-2; IDU-ODU-3; IDU-ODU-5; IDU-ODU-6;
NRCA-MCH-06-A Demand Control Ventilation Systems must be submitted for all systems required to employ demand controlled ventilation (refer to 120.1(c)3) can vary outside ventilation flow rates based on maintaining interior carbon dioxide (CO_2) concentration setpoints.	FC 1-15-16;
NRCA-MCH-07-A Supply Fan Variable Flow Controls	DOAS-3;
NRCA-MCH-08-A Valve Leakage Test	, Trane MAS;
NRCA-MCH-09-A Supply Water Temperature Reset Controls	, Trane MAS;
NRCA-MCH-10-A Hydronic System Variable Flow Controls	, Trane MAS;

STATE OF CALIFORNIA
Mechanical Systems
CALIFORNIA ENERGY COMMISSION

CERTIFICATE OF COMPLIANCE		NRCC-MCH-E
Project Name: COS Visalia - University Center	**Report Page:**	**(Page 110 of 113)**
	Date Prepared:	2/4/2025

O. DECLARATION OF REQUIRED CERTIFICATES OF ACCEPTANCE

NRCA-MCH-11-A Automatic Demand Shed Controls	AH-1; FC 1-1; FC 1-2; FC 1-3; FC 1-4; FC 1-5; FC 1-6; FC 1-7; FC 1-8; FC 1-9; FC 1-10; FC 1-11; FC 1-12; FC 1-13; FC 1-14; FC 1-15-16; DOAS-3; FC 2-1; FC 2-2; FC 2-3; FC 2-4; FC 2-5; FC 2-6; FC 2-7; FC 2-8; FC 2-9; FC 2-10; FC 2-11; FC 2-12; IDU-ODU-1; IDU-ODU-4; IDU-ODU-2; IDU-ODU-3; IDU-ODU-5; IDU-ODU-6;

STATE OF CALIFORNIA
Mechanical Systems
CALIFORNIA ENERGY COMMISSION

CERTIFICATE OF COMPLIANCE		NRCC-MCH-E
Project Name: COS Visalia - University Center	**Report Page:**	**(Page 111 of 113)**
	Date Prepared:	2/4/2025

O. DECLARATION OF REQUIRED CERTIFICATES OF ACCEPTANCE

NRCA-MCH-16-A Supply Air Temperature Reset Controls	AH-1; FC 1-1; FC 1-2; FC 1-3; FC 1-4; FC 1-5; FC 1-6; FC 1-7; FC 1-8; FC 1-9; FC 1-10; FC 1-11; FC 1-12; FC 1-13; FC 1-14; FC 1-15-16; DOAS-3; FC 2-1; FC 2-2; FC 2-3; FC 2-4; FC 2-5; FC 2-6; FC 2-7; FC 2-8; FC 2-9; FC 2-10; FC 2-11; FC 2-12; IDU-ODU-1; IDU-ODU-4; IDU-ODU-2; IDU-ODU-3; IDU-ODU-5; IDU-ODU-6;
NRCA-MCH-18-A Energy Management Control Systems	AH-1; FC 1-1; FC 1-2; FC 1-3; FC 1-4; FC 1-5; FC 1-6; FC 1-7; FC 1-8; FC 1-9; FC 1-10; FC 1-11; FC 1-12; FC 1-13; FC 1-14; FC 1-15-16; DOAS-3; FC 2-1; FC 2-2; FC 2-3; FC 2-4; FC 2-5; FC 2-6; FC 2-7; FC 2-8; FC 2-9; FC 2-10; FC 2-11; FC 2-12; IDU-ODU-1; IDU-ODU-4; IDU-ODU-2; IDU-ODU-3; IDU-ODU-5; IDU-ODU-6;

P. DECLARATION OF REQUIRED CERTIFICATES OF VERIFICATION

There are no NRCV forms required for this project.

IDENTIFICATION STAMP
DIV. OF THE STATE ARCHITECT
APP: 02-122821 INC: 2
REVIEWED FOR
SS ☑ FLS ☑ ACS ☑
DATE: 11/20/2025

These drawings and specifications, as an instrument of professional service, is not to be used in whole or in part, for any other project without prior written authorization.

MARK	DATE	DESCRIPTION
A	11/13/2025	DSA BACKCHECK

TETER, INC.
FRESNO HEADQUARTERS
VISALIA | BAKERSFIELD | MODESTO | SAN LUIS OBISPO
ARCHITECTS ENGINEERS CONNECTED

VISALIA CAMPUS UNIVERSITY CENTER
COLLEGE OF THE SEQUOIAS
915 S. MOONEY BLVD
VISALIA, CALIFORNIA

DRAWING TITLE
TITLE 24 DOCUMENTATION

PROJECT NO.
22-12498

DRAWING
M916.2

\\tetr-file1\Users\zachary.davis_TETR\Documents\12498-M-UC_zachary.davis8WYRV.rvt

STATE OF CALIFORNIA

Mechanical Systems

CALIFORNIA ENERGY COMMISSION

CERTIFICATE OF COMPLIANCE		NRCC-MCH-E
Project Name: COS Visalia - University Center	**Report Page:**	**(Page 112 of 113)**
	Date Prepared:	2/12/2025

Q. MANDATORY MEASURES DOCUMENTATION LOCATION

This table is used to indicate where mandatory measures are documented in the plan set or construction documentation.

01		02
Compliance with Mandatory Measures documented through MCH Mandatory Measures Note Block	Yes	Plan sheet or construction document location
		M-Sheets

STATE OF CALIFORNIA

Mechanical Systems

CALIFORNIA ENERGY COMMISSION

CERTIFICATE OF COMPLIANCE		NRCC-MCH-E
Project Name: COS Visalia - University Center	**Report Page:**	**(Page 113 of 113)**
Project Address: 915 S. Mooney Blvd.	**Date Prepared:**	2/12/2025

DOCUMENTATION AUTHOR'S DECLARATION STATEMENT

I certify that this Certificate of Compliance documentation is accurate and complete.

Documentation Author Name: STEVEN JONES	Documentation Author Signature:
Company: Teter Architects & Engineers	Signature Date: 02/12/2025
Address: 7535 N. PALM AVE. SUITE 201	CEA/ HERS Certification Identification (if applicable):
City/State/Zip: FRESNO, CA 93711	Phone: 559-437-0887

RESPONSIBLE PERSON'S DECLARATION STATEMENT

I certify the following under penalty of perjury, under the laws of the State of California:

1. The information provided on this Certificate of Compliance is true and correct.
2. I am eligible under Division 3 of the Business and Professions Code to accept responsibility for the building design or system design identified on this Certificate of Compliance (responsible designer)
3. The energy features and performance specifications, materials, components, and manufactured devices for the building design or system design identified on this Certificate of Compliance conform to the requirements of Title 24, Part 1 and Part 6 of the California Code of Regulations.
4. The building design features or system design features identified on this Certificate of Compliance are consistent with the information provided on other applicable compliance documents, worksheets, calculations, plans and specifications submitted to the enforcement agency for approval with this building permit application.
5. I will ensure that a completed signed copy of this Certificate of Compliance shall be made available with the building permit(s) issued for the building, and made available to the enforcement agency for all applicable inspections. I understand that a completed signed copy of this Certificate of Compliance is required to be included with the documentation the builder provides to the building owner at occupancy.

Responsible Designer Name: Steven Jones	Responsible Designer Signature:
Company: TETER, Inc.	Date Signed: 2025-02-12
Address: 7535 N. Palm Ave. Suite 201	License: M32797
City/State/Zip: Fresno CA 93711	Phone: 559-437-0887

STATE OF CALIFORNIA

Process Systems

CALIFORNIA ENERGY COMMISSION

CERTIFICATE OF COMPLIANCE		NRCC-PRC-E
This form is used to document any process systems that are within the scope of the permit application and are demonstrating compliance with mandatory requirements in 120.6/ 160.7 or prescriptive requirements in 140.9. This compliance document is used for newly constructed, addition and alteration projects.		
Project Name: COS Visalia - University Center	**Report Page:**	**(Page 1 of 7)**
Project Address: 915 S. Mooney Blvd.	**Date Prepared:**	2/12/2025

A. GENERAL INFORMATION

01	Project Location (city)	Visalia	04	Total Conditioned Floor Area	46193
02	Climate Zone	13	05	Total Unconditioned Floor Area	3567
03	Occupancy Types Within Project:		06	# of Stories (Habitable Above Grade)	1

● Office ● Support Areas ● All Other Occupancies

B. PROJECT SCOPE

This table includes process systems that are within the scope of the permit application and are demonstrating compliance with mandatory requirements in 120.6 / 160.7 or prescriptive requirements in 140.9.

My project consists of: (check all that apply):

01	02
☐ Refrigerated Spaces <3,000 ft^2 Total (no Title 24, Pt6 requirements)	☐ Escalator & Moving Walkway Speed Controls (mandatory 120.6(g))
☐ Refrigerated Spaces >=3,000 ft^2 Total (mandatory 120.6(a))	☐ Computer Rooms (mandatory 120.6(j) and prescriptive 140.9(a))[1]
☐ Food /Beverage Stores >8,000 ft^2 cfa (mandatory 120.6(b))	☐ Commercial Kitchen Ventilation/Exhaust (prescriptive 140.9(b))[1]
☐ Enclosed Parking Garage Exhaust >=10,000 cfm (mandatory 120.6(c))	☒ Laboratory Exhaust/Factory Exhaust & Fume Hood (prescriptive 140.9(c))[1]
☐ Newly Installed Process Boilers (mandatory 120.6(d))	☐ Pool/Spa (mandatory 110..4 / 160.7)
☐ Compressed Air Systems Combined HP >= 25 (mandatory 120.6(e))	☐ Controlled Environment Horticulture (mandatory 120.6(h))
☒ Elevator Lighting & Ventilation Controls (mandatory 120.6(f) / 160.7)	☐ New Steam Traps (mandatory 120.6(i))

[1] FOOTNOTES: These building features can comply using the performance method. If using the performance method for these features, compliance should be demonstrated on the NRCC-PRF-E.

STATE OF CALIFORNIA

Process Systems

CALIFORNIA ENERGY COMMISSION

CERTIFICATE OF COMPLIANCE		NRCC-PRC-E
Project Name: COS Visalia - University Center	**Report Page:**	**(Page 2 of 7)**
	Date Prepared:	2/12/2025

C. COMPLIANCE RESULTS

Results in this table are automatically calculated from data input and calculations in Tables F through R. Note: If any cell on this table says "COMPLIES with Exceptional Conditions" refer to Table D. Exceptional Conditions for guidance or see applicable Table referenced below.

01	02	03	04	05	06	07	08	09	10	11	12	13	14
Refrigerated Warehouse / Space 120.6(a) (See Table F)	Commercial Refrigeration 120.6(b) (See Table G)	Parking Garage Exhaust 120.6(c) (See Table H)	Process Boilers 120.6(d) (See Table I)	Compressed Air Systems 120.6(e) (See Table J)	Elevators 120.6(f) / 160.7 (See Table K)	Escalators & Moving Walkways 120.6(g) (See Table L)	Computer Rooms 140.9(a) (See Table M)	Commercial Kitchens 140.9(b) (See Table N)	Laboratory/ Factory Exhaust 140.9(c) (See Table O)	Controlled Environment Horticulture 120.6(h) (See Table P)	Steam Traps 120.6(i) (See Table Q)	Multifamily Pool/Spa 160.7 (See Table R)	**Compliance Results**
					Yes				Yes				COMPLIES

D. EXCEPTIONAL CONDITIONS

This table is auto-filled with uneditable comments because of selections made or data entered in tables throughout the form.

E. ADDITIONAL REMARKS

This table includes remarks made by the permit applicant to the Authority Having Jurisdiction.

F. REFRIGERATED WAREHOUSES/SPACES

This section does not apply to this project.

G. COMMERCIAL REFRIGERATION

This section does not apply to this project.

H. ENCLOSED PARKING GARAGE EXHAUST

This section does not apply to this project.

STATE OF CALIFORNIA

Process Systems

CALIFORNIA ENERGY COMMISSION

CERTIFICATE OF COMPLIANCE		NRCC-PRC-E
Project Name: COS Visalia - University Center	**Report Page:**	**(Page 3 of 7)**
	Date Prepared:	2/12/2025

I. PROCESS BOILER

This section does not apply to this project.

J. COMPRESSED AIR SYSTEMS

This section does not apply to this project.

STATE OF CALIFORNIA

Process Systems

CALIFORNIA ENERGY COMMISSION

CERTIFICATE OF COMPLIANCE		NRCC-PRC-E
Project Name: COS Visalia - University Center	**Report Page:**	**(Page 4 of 7)**
	Date Prepared:	2/12/2025

K. ELEVATOR LIGHTING AND VENTILATION

The table includes all elevator lighting and ventilation systems within the scope of the permit application to show compliance with the requirements of 120.6(f) / 160.7

01	02	03	04	05	06	07	08
		Lighting 120.6(f)1 & 120.6(f)3 / 160.7					
Elevator Name or Item Tag	Elevator Area (ft^2)	Fixture Name or Item Tag	Watts per Fixture	Number of Fixtures	Power per Design (W)	Maximum Power Allowed[1]	Controls
E1	48	E1	6	4	24	28.8	Occupancy sensors provided
		Total Design Watts			24	28.8	
09	10	11	12	13	14	15	
		Ventilation 120.6(f)2 & 120.6(f)3 / 160.7					
Name or Item Tag	Conditioned Cab?	Fan Power (Watts)	Design Airflow (CFM)	Design Watts per CFM	Maximum Watts per CFM Allowed	Controls	
E1	No	30	100	0.3	0.33	Occupancy sensors provided	
01	02	03	04	05	06	07	08
		Lighting 120.6(f)1 & 120.6(f)3 / 160.7					
Elevator Name or Item Tag	Elevator Area (ft^2)	Fixture Name or Item Tag	Watts per Fixture	Number of Fixtures	Power per Design (W)	Maximum Power Allowed[1]	Controls
E2	36	E2	8	2	16	21.6	Occupancy sensors provided
		Total Design Watts			16	21.6	
09	10	11	12	13	14	15	
		Ventilation 120.6(f)2 & 120.6(f)3 / 160.7					
Name or Item Tag	Conditioned Cab?	Fan Power (Watts)	Design Airflow (CFM)	Design Watts per CFM	Maximum Watts per CFM Allowed	Controls	
E2	No	30	100	0.3	0.33	Occupancy sensors provided	

[1] FOOTNOTE: 0.6 watts per ft^2 allowed per 120.6(f)1. Interior signal lighting and display lighting not included in power density calculation.

STATE OF CALIFORNIA

Process Systems

CALIFORNIA ENERGY COMMISSION

CERTIFICATE OF COMPLIANCE		NRCC-PRC-E
Project Name: COS Visalia - University Center	**Report Page:**	**(Page 5 of 7)**
	Date Prepared:	2/12/2025

K. ELEVATOR LIGHTING AND VENTILATION

16	Indicate where in the construction documents these requirements can be verified	

L. ESCALATORS AND MOVING WALKWAYS SPEED CONTROLS

This section does not apply to this project.

M. COMPUTER ROOM SYSTEM SUMMARY

This section does not apply to this project.

N. COMMERCIAL KITCHEN EXHAUST AND VENTILATION

O. LABORATORY AND FACTORY EXHAUST AND FUME HOODS

This table includes all laboratory and factory exhaust and fume hoods within the scope of the permit application. The inputs within Table O are used to demonstrate compliance with the requirements within 140.9(c). Licensed Healthcare facilities are exempt from these requirements

01	02	03	04	05
Zone/System or Item Tag	Airflow Reduction Compliance Method 140.9(c)1	Transfer Air Compliance Method 140.9(c)2	Fan Power Compliance Method 140.9(c)3	Hood Sash Compliance Method 140.9(c)4
CHEM LAB	Exhaust airflow capable of reducing exhaust and make-up air to min circulation/ pressurization rate	Conditioned supply air delivered to any space with mechanical exhaust is designed per §140.4(o)	NA: Newly installed exhaust system <=10,000 cfm	Hood sash closure system design controlled per §140.9(c)4
			NA: Newly installed exhaust system <=10,000 cfm	
PREP LAB	Exhaust airflow capable of reducing exhaust and make-up air to min circulation/ pressurization rate	Conditioned supply air delivered to any space with mechanical exhaust is designed per §140.4(o)	NA: Newly installed exhaust system <=10,000 cfm	NA: Not VAV hood with vertical sashes in hood intensive lab
			NA: Newly installed exhaust system <=10,000 cfm	

P. CONTROLLED ENVIRONMENT HORTICULTURE

This section does not apply to this project.

STATE OF CALIFORNIA

Process Systems

CALIFORNIA ENERGY COMMISSION

CERTIFICATE OF COMPLIANCE		NRCC-PRC-E
Project Name: COS Visalia - University Center	**Report Page:**	**(Page 6 of 7)**
	Date Prepared:	2/12/2025

Q. STEAM TRAPS IN INDUSTRIAL FACILITIES

This section does not apply to this project.

R. Pool & SPAs

This section does not apply to this project.

S. DECLARATION OF REQUIRED CERTIFICATES OF INSTALLATION

Selections have been made based on information provided in this document. If any selections have been changed by permit applicant, an explanation should be included in Table E. Additional Remarks. These documents must be provided to the building inspector during construction and can be found online at https://www.energy.ca.gov/title24/2019standards/2019_compliance_documents/Nonresidential_Documents/NRCI/

Form/Title
NRCI-PRC-01-E - Covered Process

T. DECLARATION OF REQUIRED CERTIFICATES OF ACCEPTANCE

Selections have been made based on information provided in this document. If any selection have been changed by permit applicant, an explanation should be included in Table E. Additional Remarks. These documents must be provided to the building inspector during construction and must be completed through an Acceptance Test Technician Certification Provider (ATTCP). For more information visit: http://www.energy.ca.gov/title24/attcp/providers.html

Form/Title	Systems/Spaces To Be Field Verified
NRCA-PRC-12-F Elevator Lighting & Ventilation Controls	E1; E2;
NRCA-PRC-14-F Lab Exhaust Ventilation Systems	CHEM LAB; PREP LAB;
NRCA-PRC-15-F Fume Hood Automatic Sash Closure Systems	CHEM LAB;

STATE OF CALIFORNIA

Process Systems

CALIFORNIA ENERGY COMMISSION

CERTIFICATE OF COMPLIANCE		NRCC-PRC-E
Project Name: COS Visalia - University Center	**Report Page:**	**(Page 7 of 7)**
Project Address: 915 S. Mooney Blvd.	**Date Prepared:**	2/12/2025

DOCUMENTATION AUTHOR'S DECLARATION STATEMENT

I certify that this Certificate of Compliance documentation is accurate and complete.

Documentation Author Name: STEVEN JONES	Documentation Author Signature:
Company: Teter Architects & Engineers	Signature Date: 02/12/2025
Address: 7535 N. PALM AVE. SUITE 201	CEA/ HERS Certification Identification (if applicable):
City/State/Zip: FRESNO, CA 93711	Phone: 559-437-0887

RESPONSIBLE PERSON'S DECLARATION STATEMENT

I certify the following under penalty of perjury, under the laws of the State of California:

1. The information provided on this Certificate of Compliance is true and correct.
2. I am eligible under Division 3 of the Business and Professions Code to accept responsibility for the building design or system design identified on this Certificate of Compliance (responsible designer)
3. The energy features and performance specifications, materials, components, and manufactured devices for the building design or system design identified on this Certificate of Compliance conform to the requirements of Title 24, Part 1 and Part 6 of the California Code of Regulations.
4. The building design features or system design features identified on this Certificate of Compliance are consistent with the information provided on other applicable compliance documents, worksheets, calculations, plans and specifications submitted to the enforcement agency for approval with this building permit application.
5. I will ensure that a completed signed copy of this Certificate of Compliance shall be made available with the building permit(s) issued for the building, and made available to the enforcement agency for all applicable inspections. I understand that a completed signed copy of this Certificate of Compliance is required to be included with the documentation the builder provides to the building owner at occupancy.

Responsible Designer Name: Steven Jones	Responsible Designer Signature:
Company: TETER, Inc.	Date Signed: 2025-02-12
Address: 7535 N. Palm Ave. Suite 201	License: M32797
City/State/Zip: Fresno CA 93711	Phone: 559-437-0887

IDENTIFICATION STAMP
DIV. OF THE STATE ARCHITECT
APP: 02-122821 INC: 2
REVIEWED FOR
SS ☑ FLS ☑ ACS ☑
DATE: 11/20/2025

Teter, Inc. expressly reserves its common law copyright and other property rights in these plans. This document, the ideas and designs incorporated herein, as an instrument of professional service, is not to be used in whole or in part, for any other project without prior written authorization.

MARK	DATE	DESCRIPTION
A	11/13/2025	DSA BACKCHECK

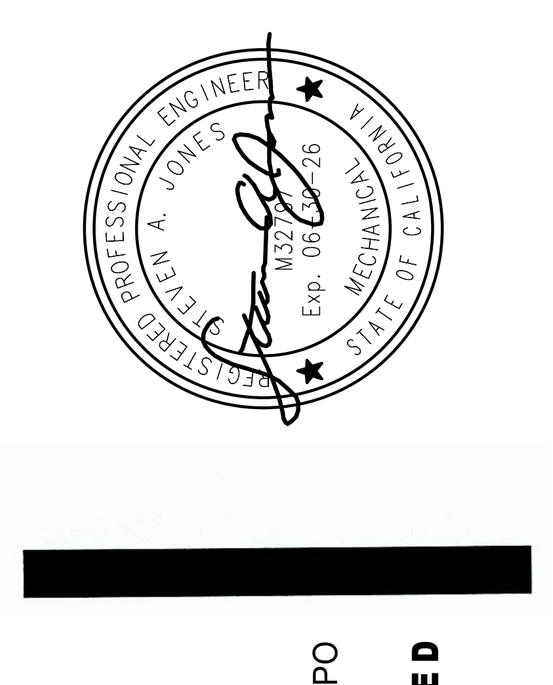

TETER, INC.
FRESNO HEADQUARTERS
VISALIA | BAKERSFIELD | MODESTO | SAN LUIS OBISPO
ARCHITECTS ENGINEERS CONNECTED

TETER

VISALIA CAMPUS UNIVERSITY CENTER
COLLEGE OF THE SEQUIOAS
915 S. MOONEY BLVD
VISALIA, CALIFORNIA

DRAWING TITLE
TITLE 24 DOCUMENTATION

PROJECT NO.
22-12498

DRAWING
M917.2

PLOT DATE: 8/19/2025 10:23:40 PM

\\tetr-file1\Users\zachary.davis_TETR\Documents\12498-M-UC_zachary.davis8WYRV.rvt

CERTIFICATE OF COMPLIANCE		NRCC-CXR-E
This document is used to demonstrate compliance with mandatory commissioning requirements in 120.8 for nonresidential buildings and hotel/motel or mixed-use buildings with nonresidential spaces.		
Project Name: University Center College of the Sequoias Visalia Campus	Report Page:	(Page 1 of 23)
Project Address: 915 S Mooney BLVD Visalia CA	Date Prepared:	2025-02-12T18:57:41-05:00

A. GENERAL INFORMATION

01	Project Location (city)	Visalia	04	Building Size (ft²)	49500
02	Occupancy Type	Nonresidential	05		10,000 - 49,999 ft²
03	Project Type	Newly constructed	06		Unitary or packaged equipment each serving one zone
			07	Climate Zone	13

B. PROJECT SCOPE

Based on project information provided in Table A, Table B indicates which commissioning related requirements apply per 120.8. Table B is not editable by the user.

Commissioning Requirements per 120.8

01	Table F: Design Review Kickoff	120.8(d)1 and 120.8(d)2	The design review kickoff meeting establishes who will play the role of the design reviewer, the project schedule and identify owner's requirements. This meeting should be conducted during schematic design.
02	Table G: Owner's Project Requirements (OPR)	120.8(b)	The owner's project requirements establish the owner's goals, requirements and expectations for everything related to energy consumption and operation. This should be completed during schematic design.
03	Table H: Basis of Design (BOD)	120.8(c)	The basis of design documents the design elements such as calculations and product selections that meet the owner's project requirements and applicable regulatory requirements. This should be completed during schematic design.
04	Table I: Design Review	120.8(d) and 120.8(e)	The design reviewer(s) reviews the construction documents for clarity, completeness, and adherence to the owner's goals. Commissioning measures must be included in the construction documents to facilitate the design review and commissioning process. For projects with >= 10,000 ft² of nonresidential conditioned floor area, the design review is for adherence with the Owner's Project Requirements (OPR) and Basis of Design (BOD). This should be conducted during design.
05	Table J: Commissioning Plan	120.8(f)	The commissioning plan is developed by the commissioning provider with input from the designer and defines the scope of commissioning the project. This should be drafted during design and completed during early construction.
06	Table K: Functional Performance Testing	120.8(g)	Functional performance testing is conducted on building systems to demonstrate correct installation and operation.
07	Table L: Documentation and Training	120.8(h)	Documentation of the operational aspects of the building shall be completed within the Systems Manual and delivered to the building owner or representative and facilities operator.

CERTIFICATE OF COMPLIANCE		NRCC-CXR-E
Project Name: University Center College of the Sequoias Visalia Campus	Report Page:	(Page 2 of 23)
	Date Prepared:	2025-02-12T18:57:41-05:00

B. PROJECT SCOPE

08	Table M: Commissioning Report	120.8(i)	A complete report of commissioning process activities undertaken through the design, construction and reporting recommendations for post-construction phases of the building project shall be completed and provided to the owner or representative.

C. COMPLIANCE RESULTS

Table C will indicate if the project data input into the compliance document is compliant with commissioning requirements per 120.8. This table is not editable by the user. If any cell on this table says "DOES NOT COMPLY" or "COMPLIES with Exceptional Conditions" refer to Table D. for guidance.

01	02	03	04	05	06	07	08	09
Design Kickoff Review	Owner's Project Requirements	Basis of Design	Design Review	Commissioning Plan	Functional Performance Testing	Documentation and Training	Commissioning Report	
Table F	Table G	Table H	Table I	Table J	Table K	Table L	Table M	
Yes	Yes	Yes	Yes	Yes	Yes	Yes	Yes	COMPLIES
10				Jonathan Schlundt				COMPLIES

D. EXCEPTIONAL CONDITIONS

E. ADDITIONAL REMARKS

CERTIFICATE OF COMPLIANCE		NRCC-CXR-E
Project Name: University Center College of the Sequoias Visalia Campus	Report Page:	(Page 3 of 23)
	Date Prepared:	2025-02-12T18:57:41-05:00

F. DESIGN REVIEW KICKOFF MEETING

This table indicates that the design reviewer meets the qualification requirements per Title 24, Part 1 Section 10-103(a)1 and demonstrates compliance with design review kickoff requirements per 120.8(d)2. This meeting should occur during the Schematic Design phase of the project.

Design Review Kickoff Meeting Details

01	Date of Design Review Kickoff Meeting		2024-12-06	
02	Meeting Attendees: (one person may play multiple roles)			
☒	Owner/Facility Manager:	Byron Woods	☒ Design Reviewer(s)	Jonathon Schlundt
☒	Project Manager:	Byron Woods	☒ Design Architect/ Engineer(s):	Jon Coulter/ Steven Jones
☐	Contractor:		☐ Certified Acceptance Test Tech(s):	
☒	Commissioning Provider:	Alex Rodriguez	☐ Energy/ T24 Part 6 Consultant:	

Design Reviewer Qualifications per Title 24 Part 1 Section 10-103(a)1

	The design reviewer(s) must be licensed professional engineers or licensed architects, or licensed contractors representing services performed by or under the direct supervision of a licensed engineer or architect, as specified in the provisions of Division 3 of the Business and Professions Code.	Do the Design Reviewer(s) meet these qualifications?	
		Yes	No
03	In addition, for buildings with >= 10,000 ft² but < 50,000², the design reviewer(s) shall be a qualified in-house engineer or architect with no other project involvement or a third party engineer, architect, or contractor	●	○
04	The design reviewer(s) for this project will be:	Jonathan Schlundt	

Preliminary Construction Schedule

		Start Date	Completion Date
05	Schematic Design	2024-10-01	2024-11-01
06	Design Development	2024-11-01	2025-02-28
07	Construction Documents	2024-10-01	2024-11-08
08	Construction	2025-06-01	2026-01-01
09	Building Turnover	2025-07-01	2026-01-01

CERTIFICATE OF COMPLIANCE		NRCC-CXR-E
Project Name: University Center College of the Sequoias Visalia Campus	Report Page:	(Page 4 of 23)
	Date Prepared:	2025-02-12T18:57:41-05:00

G. OWNER'S PROJECT REQUIREMENTS (OPR)

This table is only completed if an OPR document is not attached to permit application to demonstrate compliance with 120.8(b). If a specific field is not applicable to the project scope, "NA" is indicated in the table. Per 120.8(b), the OPR is to be completed before design begins. This may be done at the Design Review Kickoff Meeting (see Table F)

01	Attaching Completed Owner's Project Requirements Document?	YES ○	NO ●
02	Owner's Project Requirements Document Authors and Roles	Alex Rodriguez Commissioning Agent	
Energy Efficiency Goals: General			
03	What is the target total energy usage per square foot per year? (ie, Energy User Intensity (EUI) in kBtu/ft²)	30	
04	What is the target total energy cost per square foot per year?	1.74	
05	Is kW demand control specifically an interest of the client or the design team? If so, for what reason?	No	
06	What are the project goals and requirements for building siting that will impact energy use?	Building siting impacts energy use by optimizing solar orientation to reduce HVAC and lighting demands. Key goals include maximizing passive solar heating while minimizing heat gain and energy consumption.	
07	What are the project goals and requirements for landscape that will impact energy use?	Landscape design impacts energy use by providing strategic shading, windbreaks, and reducing heat island effects. Key goals include using trees and vegetation to minimize cooling loads, improve microclimates, and enhance stormwater management for energy efficiency.	
08	Additional notes regarding general efficiency	None	
Energy Efficiency Goals: Envelope			
09	What are the project goals and requirements for building fenestration that will impact energy use?	The project goals and requirements for building fenestration focus on maximizing daylighting, minimizing heat gain/loss, and optimizing thermal performance to reduce energy use. Key considerations include high-performance glazing, proper orientation, shading strategies, and compliance with U-factor, SHGC, and VT requirements under Title 24, Part 6.	
10	What are the project goals and requirements for walls/floors that will impact energy use?	The project goals and requirements for walls and floors focus on minimizing heat transfer, enhancing thermal mass, and ensuring airtight construction to improve energy efficiency. Key considerations include proper insulation levels, reduced thermal bridging, air sealing strategies, and compliance with Title 24, Part 6 to optimize building performance.	

CERTIFICATE OF COMPLIANCE		NRCC-CXR-E
Project Name: University Center College of the Sequoias Visalia Campus	Report Page:	(Page 5 of 23)
	Date Prepared:	2025-02-12T18:57:41-05:00

G. OWNER'S PROJECT REQUIREMENTS (OPR)

11	What are the project goals and requirements for building roof that will impact energy use?	The project goals and requirements for the building roof focus on minimizing heat gain/loss, enhancing insulation, and optimizing reflectivity to improve energy efficiency. Key considerations include high R-value insulation, cool roofing materials, air sealing, and compliance with Title 24, Part 6 to reduce HVAC loads and improve thermal performance.
12	Additional notes regarding envelope efficiency	None
Energy Efficiency Goals: HVAC Systems		
13	List the HVAC system types considered desirable, and ones that are not to be considered.	Desirable HVAC systems include VRF for zoning flexibility, chilled water systems for large buildings, DOAS for improved ventilation, packaged rooftop units for cost-effectiveness, and heat pump systems for efficient heating and cooling. Systems not to be considered include constant volume due to inefficiency, electric resistance heating for high costs, single-zone DX for limited control, and non-integrated exhaust for poor ventilation effectiveness.
14	What is the desired thermostatic setpoint range in the heating season, and cooling season?	The desired thermostatic setpoint range is 68-72°F during the heating season and 74-78°F during the cooling season. These ranges balance energy efficiency, occupant comfort, and compliance with industry standards.
15	What is the expected occupancy schedule? Will the occupants be allowed to override the mechanical system controls during "unoccupied hours"?	The expected occupancy schedule follows standard business or school hours, typically 7:00 AM to 6:00 PM, with reduced operation during evenings and weekends. Occupants will have limited override capability during unoccupied hours for after-hours use, with time and temperature restrictions to prevent excessive energy consumption.
16	Are there times during the day that the zone temperature is allowed to drift out of the temperature setpoint range? If so, how long and what times are acceptable.	Zone temperatures are allowed to drift outside the setpoint range during unoccupied periods and scheduled setbacks, typically during lunch breaks, after hours, or weekends. Acceptable drift times range from 30 minutes to 2 hours, depending on occupancy patterns and system recovery capabilities.
17	Is it acceptable to let the facility cool down to a night setback temperature in the winter?	Yes, it is acceptable to allow the facility to cool down to a night setback temperature in the winter, typically around 55-60°F, as long as it does not impact system recovery time or occupant comfort upon reoccupation.
18	Is it acceptable to let the facility temperature drift above setpoint during the summer evenings?	Yes, it is acceptable to let the facility temperature drift above setpoint during summer evenings, typically up to 85°F, as long as it does not affect system recovery time or occupant comfort when the building is reoccupied.
19	How many days out of the year is it acceptable to not meet the entire cooling/heating load?	It is acceptable to not meet the entire cooling or heating load for up to 20 days per year, provided these occurrences do not significantly impact occupant comfort, critical operations, or system performance.

CERTIFICATE OF COMPLIANCE		NRCC-CXR-E
Project Name: University Center College of the Sequoias Visalia Campus	Report Page:	(Page 6 of 23)
	Date Prepared:	2025-02-12T18:57:41-05:00

G. OWNER'S PROJECT REQUIREMENTS (OPR)

20	Are there zones with special temperature, humidity, air filtering, etc., requirements? If so, identify and list the special environmental control requirements.	Yes, certain zones require special environmental controls. Server rooms and data centers need tighter temperature control (68-75°F), humidity between 40-60%, and enhanced air filtration (MERV 13 or higher). Laboratories and clean rooms may require precise temperature and humidity regulation, HEPA filtration, and positive or negative pressure control. Healthcare spaces may need strict humidity control (30-60%), higher air changes per hour (ACH), and enhanced filtration (MERV 14 or HEPA).
21	What expectations are there around building ventilation?	Building ventilation must meet ASHRAE 62.1 standards and Title 24, Part 6 requirements, ensuring adequate outdoor air intake, air changes per hour (ACH), and CO_2 monitoring for indoor air quality. Demand-controlled ventilation (DCV) and energy recovery ventilators (ERV) are expected where applicable to optimize efficiency while maintaining occupant comfort.
22	Is occupancy-based demand control ventilation (DCV) desired, or required?	Occupancy-based demand control ventilation (DCV) is required where mandated by Title 24, Part 6, and desired in other areas to optimize energy efficiency and indoor air quality. It should be implemented in spaces with variable occupancy, such as conference rooms, classrooms, and auditoriums.
23	Is a building automation system (BAS) desired? If so, what are the requirements of the BAS and what value is expected to be added with the BAS?	A Building Automation System (BAS) is desired to optimize energy efficiency, improve occupant comfort, and streamline maintenance. The BAS must provide centralized monitoring and control of HVAC, lighting, and ventilation, support trend logging and fault detection, and integrate with Title 24, Part 6 compliance requirements. Expected value includes reduced energy costs, improved system performance, proactive maintenance, and enhanced occupant comfort through automated scheduling and demand response capabilities.
24	Will zone setpoints be controlled locally by the user, or via the BAS only by the maintenance staff?	Zone setpoints will be controlled primarily via the BAS by maintenance staff, with limited local adjustment for occupants within a predefined range, typically ±2°F from the default setpoint.
25	Explain the requirements of the HVAC system in regards to temperature, humidity and draft control.	The HVAC system must maintain stable temperature control within the designated setpoint ranges, typically 68-72°F for heating and 74-78°F for cooling. Humidity levels should remain within 40-60% to ensure comfort and prevent moisture-related issues. Draft control must minimize air velocity in occupied zones, preventing discomfort from excessive airflow while ensuring proper ventilation and air distribution.

CERTIFICATE OF COMPLIANCE		NRCC-CXR-E
Project Name: University Center College of the Sequoias Visalia Campus	Report Page:	(Page 7 of 23)
	Date Prepared:	2025-02-12T18:57:41-05:00

G. OWNER'S PROJECT REQUIREMENTS (OPR)

26	Explain the requirements of the facility in regards to indoor air quality	The facility must meet ASHRAE 62.1 and Title 24, Part 6 standards for indoor air quality, ensuring adequate ventilation rates, CO_2 monitoring, and proper air filtration. Filtration must include MERV 13 or higher where required, and spaces with higher air quality needs, such as healthcare or labs, may require HEPA filters. Demand-controlled ventilation (DCV) should be implemented in high-occupancy areas to optimize fresh air intake while maintaining energy efficiency. Humidity levels must remain between 40-60% to prevent mold growth and maintain occupant comfort.
27	What are the acoustic requirements of the HVAC system within the various spaces of the facility?	The HVAC system must meet NC (Noise Criterion) levels appropriate for each space, ensuring occupant comfort and minimal disruption. Office spaces, classrooms, and conference rooms should maintain NC 25-30 for speech clarity, while lobbies and corridors can be NC 35-40. Mechanical rooms and equipment areas may have higher noise levels but require isolation to prevent transmission. Sound attenuation strategies include duct silencers, vibration isolation, and low-noise diffusers to maintain acoustic performance.
28	Describe the maintenance plan and how the HVAC design needs to address operation and maintenance issues.	The maintenance plan requires easy access to equipment, minimized service disruptions, and long-term reliability. The HVAC design must include clearly labeled components, accessible service points, and adequate clearance for routine maintenance and repairs. BAS integration should allow remote monitoring, diagnostics, and fault detection to reduce downtime. Filtration, drain pans, and coils must be designed for easy replacement and cleaning to maintain efficiency. Standardized equipment and readily available parts should be prioritized to simplify repairs and minimize costs.
Energy Efficiency Goals: Indoor Lighting Systems		
30	Describe specific lighting requirements including quality and glare.	The lighting design must provide high-quality illumination that ensures visual comfort, energy efficiency, and compliance with Title 24, Part 6. Fixtures should have high CRI (Color Rendering Index) values (≥80) to maintain accurate color perception and reduce eye strain. Glare control will be achieved through shielded fixtures, diffusers, and appropriate beam angles to prevent discomfort and reflections on screens or work surfaces. Dimmable LED lighting with occupancy and daylight sensors will enhance efficiency while maintaining consistent light levels. The design prioritizes uniform distribution, minimal flicker, and adaptability for different tasks and space types.
31	List the desired types of lighting (if any) and ones that are not to be considered. (example: fluorescent in 2x2 grid, accent lighting, particular lamps)	None
32	Describe (if any) task lighting requirements.	None

CERTIFICATE OF COMPLIANCE		NRCC-CXR-E
Project Name: University Center College of the Sequoias Visalia Campus	Report Page:	(Page 8 of 23)
	Date Prepared:	2025-02-12T18:57:41-05:00

G. OWNER'S PROJECT REQUIREMENTS (OPR)

33	Describe any desired features of the lighting control system including occupancy, daylighting, and demand response if applicable.	The lighting control system must include occupancy sensors to automatically turn lights on and off based on room usage, reducing energy waste. Daylight harvesting controls should adjust artificial lighting levels based on available natural light to maintain consistent illumination while saving energy. Demand response integration is required to allow the system to reduce lighting power during peak demand periods as needed. Dimmable LED fixtures with scene control should be implemented in multi-use spaces to enhance flexibility and user comfort. All controls must comply with Title 24, Part 6 for energy efficiency and automation.
34	What is the expected occupancy schedule? Will the occupants be allowed to override the lighting system controls during "unoccupied hours"?	The expected occupancy schedule follows standard business or school hours, typically 7:00 AM to 6:00 PM, with reduced operation in the evenings and on weekends. Occupants will have limited override capability during unoccupied hours, allowing manual control for after-hours use with automatic shutoff after a set period to prevent unnecessary energy consumption.
35	Does occupancy-based control need to be coordinated with mechanical demand control ventilation?	No
36	Describe how occupants will interact with the lighting control system (overrides etc)	Occupants will interact with the lighting control system through wall-mounted switches, dimmers, and touch panels in designated areas. Occupancy sensors will automatically turn lights on and off based on presence, while daylight sensors will adjust brightness as needed. Manual overrides will be available in select spaces, allowing temporary adjustments with auto-reset after a set period to maintain energy efficiency. BAS integration will enable centralized scheduling and demand response, ensuring compliance with Title 24, Part 6 while providing flexibility for occupant needs.
37	Additional notes regarding Indoor Lighting system efficiency	Outdoor lighting must provide adequate illumination for safety, security, and functionality while minimizing energy consumption and light pollution. Fixtures should be LED with full cutoff optics to reduce glare and prevent skyglow. Motion sensors and photocells should control pathway and perimeter lighting to activate only when needed. Parking lot and building-mounted lighting must comply with Title 24, Part 6 and local dark-sky regulations, ensuring proper light levels without excessive brightness. Lighting color temperature should be 4000K or lower for visibility and comfort while maintaining a consistent aesthetic.
Energy Efficiency Goals: Outdoor Lighting Systems		
38	Describe specific outdoor lighting requirements.	None

CERTIFICATE OF COMPLIANCE		NRCC-CXR-E
Project Name: University Center College of the Sequoias Visalia Campus	Report Page:	(Page 9 of 23)
	Date Prepared:	2025-02-12T18:57:41-05:00

G. OWNER'S PROJECT REQUIREMENTS (OPR)

39	List the desired types of outdoor lighting, including lighting for building facade, landscape, walkways, roof-top, etc. if applicable.	None
40	Describe any features of the outdoor lighting control system, including motion sensors, photocontrol, time-switch and automatic scheduling.	The outdoor lighting control system will include motion sensors for pathway and security lighting, activating only when movement is detected to reduce unnecessary energy use. Photocontrol sensors will automatically turn lights on at dusk and off at dawn based on natural light levels. A time-switch system will schedule lighting for parking lots and building exteriors, ensuring operation only during necessary hours. Automatic scheduling through the BAS will adjust lighting based on occupancy patterns, demand response events, and seasonal variations, ensuring compliance with Title 24, Part 6 while minimizing energy consumption.
41	Describe how occupants will interact with the lighting control system (overrides etc)	Occupants will interact with the lighting control system through wall-mounted switches, dimmers, and touch panels in designated areas. Occupancy sensors will automatically turn lights on and off based on presence, while daylight sensors will adjust brightness as needed. Manual overrides will be available in select spaces, allowing temporary adjustments with auto-reset after a set period to maintain energy efficiency. BAS integration will enable centralized scheduling and demand response, ensuring compliance with Title 24, Part 6 while providing flexibility for occupant needs.
42	Additional notes regarding Outdoor lighting system efficiency	None
Energy Efficiency Goals: Water Heating Systems		
43	Describe what the water heating system will be used for and expected demand?	The water heating system will be used for domestic hot water (DHW) needs, including restrooms, kitchen facilities, janitorial sinks, and any process-related heating demands. Expected demand will depend on occupancy, fixture count, and usage patterns, with peak loads occurring during morning and midday periods. The system must be sized to ensure consistent supply without excessive standby losses, incorporating high-efficiency heaters, recirculation loops, and demand-based controls to optimize energy use.
44	Describe the desired type (if any) of water heating system and those that should not be considered, (example: instantaneous, heatpump, manufacturer, etc.)	None
45	What are the desired automation features and controls for the water heating system.	The water heating system should have BAS integration for remote monitoring, scheduling, and fault detection. Desired automation features include demand-based heating controls, temperature setback during unoccupied hours, and recirculation pump optimization to reduce standby losses. Leak detection, automatic shutoff, and real-time performance tracking should be incorporated to enhance efficiency and maintenance.

IDENTIFICATION STAMP
DIV. OF THE STATE ARCHITECT
APP: 02-122821 INC: 2
REVIEWED FOR
SS ☑ FLS ☑ ACS ☑
DATE: 11/20/2025

Teter, Inc. expressly reserves its common law copyright and other property rights in these plans. This document, the ideas and designs incorporated herein, as an instrument of professional service, is not to be used in whole or in part, for any other project without prior written authorization.

MARK	DATE	DESCRIPTION
A	11/13/2025	DSA BACKCHECK

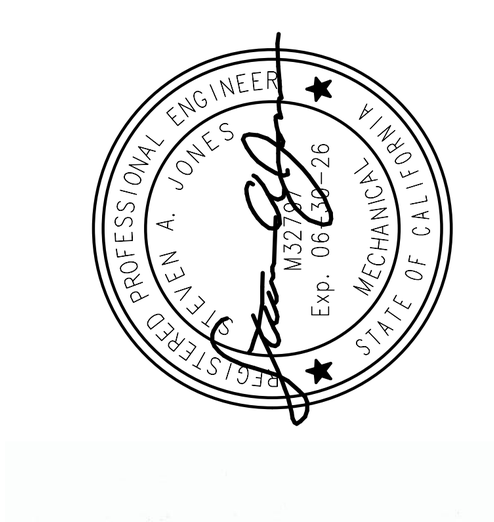

TETER, INC.
FRESNO HEADQUARTERS
VISALIA | BAKERSFIELD | MODESTO | SAN LUIS OBISPO
ARCHITECTS ENGINEERS CONNECTED
TETER

VISALIA CAMPUS UNIVERSITY CENTER
COLLEGE OF THE SEQUIOAS
915 S. MOONEY BLVD
VISALIA, CALIFORNIA

DRAWING TITLE
TITLE 24 DOCUMENTATION

PROJECT NO.
22-12498

DRAWING
M918.2

PLOT DATE: 8/19/2025 10:23:47 PM

\\tetr-file1\Users\zachary.davis_TETR\Documents\12498-M-UC_zachary.davis8WYRV.rvt

STATE OF CALIFORNIA
Nonresidential Building Commissioning
CALIFORNIA ENERGY COMMISSION

CERTIFICATE OF COMPLIANCE		NRCC-CXR-E
Project Name: University Center College of the Sequoias Visalia Campus	**Report Page:**	**(Page 10 of 23)**
	Date Prepared:	2025-02-12T18:57:41-05:00

G. OWNER'S PROJECT REQUIREMENTS (OPR)		
46	What are the efficiency requirements of the water heating system?	The water heating system must meet or exceed Title 24, Part 6 efficiency requirements, with a focus on high thermal efficiency (≥90% for gas-fired systems), low standby losses, and optimized recirculation controls. Heat pump water heaters or condensing gas models are preferred for improved energy performance. Systems should incorporate insulated storage tanks, high-efficiency burners or heat exchangers, and demand-based operation to minimize energy consumption.
Operations and Maintenance Requirements		
48	Desired building life span	50 to 100 Years
49	What are the broad goals relative to life cycle of the equipment?	The broad goals for the life cycle of equipment include maximizing efficiency, reliability, and longevity while minimizing operational costs, energy consumption, and environmental impact. Proper maintenance, timely upgrades, and lifecycle cost analysis ensure optimal performance and sustainability.
50	What is the desired level of training and orientation for building occupants to understand and use the building systems?	The desired level of training and orientation for building occupants should ensure basic operational understanding for daily use and in-depth training for facility staff on system optimization, maintenance, and troubleshooting. Training should cover energy-efficient practices, controls operation, and emergency procedures to maximize performance and occupant comfort.
51	What is the desired level of training and orientation for O&M staff to understand and maintain the building systems?	The desired level of training for O&M staff should be comprehensive and hands-on, covering system operation, routine maintenance, troubleshooting, and energy optimization. Staff should be proficient in building controls, equipment diagnostics, and manufacturer-recommended procedures to ensure long-term performance and efficiency.

H. BASIS OF DESIGN (BOD)

This table is only completed if a BOD document is not attached to the permit application to demonstrate compliance with 120.8(c). If a specific field is not applicable to the project scope, "NA" is indicated in the table. Per 120.8(c), the BOD should be completed and updated during the design phase.

		YES	NO
01	Attaching Completed Basis of Design Document?	○	●
02	Basis of Design Document Authors and Roles	Alex Rodriguez Commissioning Agent	

STATE OF CALIFORNIA
Nonresidential Building Commissioning
CALIFORNIA ENERGY COMMISSION

CERTIFICATE OF COMPLIANCE		NRCC-CXR-E
Project Name: University Center College of the Sequoias Visalia Campus	**Report Page:**	**(Page 11 of 23)**
	Date Prepared:	2025-02-12T18:57:41-05:00

Title 24 Part 6 Compliance Approach

03	Title 24 Part 6 Compliance Approach (select one)	☒	Prescriptive	☐	Performance	☐	Performance and Prescriptive Combined

General Energy Efficiency Goals		
05	Energy Use Intensity (EUI)	Energy Use Intensity (EUI) will be calculated by dividing the total annual energy consumption (kBtu) by the building's total square footage (ft²). This includes energy from electricity, gas, and other fuels, normalized for occupancy and climate conditions to assess efficiency and benchmark performance.
06	Energy Cost Budget	Energy costs per square foot will be calculated by dividing the total annual energy cost ($) by the total building square footage (ft²). This will include electricity, gas, and other utility expenses, factoring in actual utility rates and demand charges.
Envelope Basis of Design		
07	Window to Wall Ratio	The target Window-to-Wall Ratio (WWR) is 40% or less to balance daylighting, thermal performance, and energy efficiency while complying with Title 24, Part 6 requirements. This helps minimize heat gain/loss while optimizing natural light and reducing HVAC loads.
08	Opaque Wall Assembly	The preliminary wall assemblies incorporate high R-value insulation, continuous air and vapor barriers, and reduced thermal bridging to enhance energy efficiency. Strategies include light-colored or reflective exterior finishes, airtight construction, and optimized thermal mass to meet the owner's goals for reduced energy consumption, improved occupant comfort, and compliance with Title 24, Part 6.
09	Window Performance	The preliminary fenestration performance targets include a U-value of ≤ 0.30, SHGC of ≤ 0.25, and VT of ≥ 0.40 to balance insulation, heat gain control, and daylighting efficiency. These values align with energy efficiency goals and Title 24, Part 6 requirements.
10	Response to OPR Document	The envelope design is the best choice to meet the Owner's Project Requirements (OPR) because it optimizes thermal performance, airtightness, and moisture control to reduce energy consumption and enhance occupant comfort. High-performance insulation, low U-value fenestration, and strategic shading minimize heat transfer and HVAC loads while ensuring compliance with Title 24, Part 6. Durable materials and airtight construction improve long-term efficiency, reducing maintenance costs and enhancing building resilience.

STATE OF CALIFORNIA
Nonresidential Building Commissioning
CALIFORNIA ENERGY COMMISSION

CERTIFICATE OF COMPLIANCE		NRCC-CXR-E
Project Name: University Center College of the Sequoias Visalia Campus	**Report Page:**	**(Page 12 of 23)**
	Date Prepared:	2025-02-12T18:57:41-05:00

HVAC System Basis of Design		
11	HVAC System Design	The HVAC design solution prioritizes energy efficiency, occupant comfort, and system reliability while complying with Title 24, Part 6. The system includes high-efficiency heating and cooling equipment, demand-controlled ventilation (DCV), and a Building Automation System (BAS) for optimized operation. Energy recovery ventilators (ERVs) and zoning strategies enhance performance and reduce energy consumption. The design ensures proper airflow distribution, humidity control, and acoustic considerations while providing easy access for maintenance to extend equipment lifespan and ensure long-term efficiency.
12	Heating System Description	The heating system consists of high-efficiency condensing boilers and heat pumps, located in mechanical rooms or rooftop areas for optimal space utilization and maintenance access. Efficiency features include modulating burners, optimized heat exchangers, and demand-based operation to minimize energy consumption. Noise reduction is achieved through acoustic insulation, low-noise fans, and vibration isolation to ensure occupant comfort. Environmental benefits include reduced greenhouse gas emissions, lower energy demand, and compliance with Title 24, Part 6. Special features include BAS integration for remote monitoring, fault detection, and adaptive control strategies to enhance performance and reliability.
13	Cooling System Description	The cooling system consists of high-efficiency air-cooled chillers and heat pump systems, located in dedicated mechanical rooms for optimal space utilization and maintenance access. Efficiency features include variable capacity compressors, energy recovery systems, and optimized control sequencing to reduce energy consumption. Noise reduction is achieved through low-noise fans, vibration isolation, and acoustic barriers to maintain occupant comfort. Environmental benefits include reduced refrigerant use, compliance with low-GWP refrigerant standards, and optimized energy efficiency to lower carbon emissions. Special features include BAS integration for remote monitoring, fault detection, and adaptive load management to enhance performance and reliability.
14	Ventilation System Description	The ventilation system consists of dedicated outdoor air systems (DOAS) and energy recovery ventilators (ERVs) located in mechanical rooms or integrated with HVAC units for optimal air distribution. Efficiency features include demand-controlled ventilation (DCV), energy recovery systems, and high-efficiency fans to reduce energy consumption. Indoor air quality is enhanced through MERV 13 or higher filtration, CO$_2$ monitoring, and humidity control to maintain a healthy environment. Special features include BAS integration for real-time monitoring, automated air balancing, and adaptive ventilation strategies to optimize performance and occupant comfort.

STATE OF CALIFORNIA
Nonresidential Building Commissioning
CALIFORNIA ENERGY COMMISSION

CERTIFICATE OF COMPLIANCE		NRCC-CXR-E
Project Name: University Center College of the Sequoias Visalia Campus	**Report Page:**	**(Page 13 of 23)**
	Date Prepared:	2025-02-12T18:57:41-05:00

15	Control Intent Narrative/ Sequence of Operations	The Building Automation System (BAS) controls HVAC, ventilation, and water heating to optimize energy efficiency, occupant comfort, and compliance with Title 24, Part 6. During occupied hours, the BAS maintains setpoints by modulating heating and cooling based on demand. Demand-controlled ventilation (DCV) adjusts outdoor air intake using CO$_2$ sensors in high-occupancy spaces. Temperature setbacks apply during unoccupied hours, with night heating at 55-60°F and cooling drift up to 85°F to reduce energy use. Energy recovery ventilators (ERVs) and dedicated outdoor air systems (DOAS) regulate ventilation by maintaining airflow rates and reducing energy loss. The BAS schedules, monitors, and adjusts system operations to ensure peak performance and reliability.
16	Outside Air Supply	All spaces and zones will meet outside air ventilation requirements by using mechanical ventilation systems designed per ASHRAE 62.1 and Title 24, Part 6. Dedicated outdoor air systems (DOAS), energy recovery ventilators (ERVs), and demand-controlled ventilation (DCV) will regulate airflow based on occupancy and CO$_2$ levels. Minimum ventilation and exhaust rates will be calculated using occupant density, space type, and airflow per person and per square foot as defined in the OPR Document. The Building Automation System (BAS) will monitor and adjust airflow to ensure compliance while optimizing energy efficiency.
17	Load Calculation	The load calculation methodology follows ASHRAE 90.1, ASHRAE 62.1, and Title 24, Part 6 to ensure compliance with the OPR document. Heating and cooling loads are determined using hourly climate data, internal heat gains, occupancy schedules, and envelope performance. Peak loads account for solar heat gain, infiltration, ventilation requirements, and equipment loads. Load diversity and zoning strategies optimize system capacity and efficiency. The calculations ensure right-sized equipment selection to balance energy efficiency, occupant comfort, and operational reliability.

18 Indoor Design Conditions

	Occupied Spaces	Unoccupied Spaces	
Occupied Periods	Temp (°F)	Temp (°F)	Relative Humidity (%)
Heating	68	65	30
Cooling	74	75	40
Unoccupied Periods	Temp (°F)	Temp (°F)	Relative Humidity (%)
Heating	55	55	30
Cooling	85	85	60

STATE OF CALIFORNIA
Nonresidential Building Commissioning
CALIFORNIA ENERGY COMMISSION

CERTIFICATE OF COMPLIANCE		NRCC-CXR-E
Project Name: University Center College of the Sequoias Visalia Campus	**Report Page:**	**(Page 14 of 23)**
	Date Prepared:	2025-02-12T18:57:41-05:00

19	Response to OPR Document	The HVAC design is the best choice to meet the Owner's Project Requirements (OPR) because it ensures energy efficiency, occupant comfort, and long-term reliability while complying with Title 24, Part 6. The system includes high-efficiency heating and cooling equipment, demand-controlled ventilation (DCV), and energy recovery ventilators (ERVs) to optimize performance. Zoning strategies and BAS integration allow precise temperature and airflow control, reducing energy waste and enhancing indoor air quality. The design prioritizes low operating costs, easy maintenance access, and noise reduction measures to improve overall building performance and occupant experience.
Indoor Lighting System Basis of Design		
20	Indoor Lighting System Narrative	Generally describe the indoor lighting system which will be commissioned.
21	Fixture Types	The lighting design includes LED recessed fixtures for general illumination in offices, classrooms, and corridors to ensure uniform brightness and energy efficiency. Linear LED fixtures will be used in hallways and open workspaces for modern aesthetics and low maintenance. Pendant and downlight fixtures will be considered for lobbies and gathering areas to enhance visual appeal. Task lighting will be incorporated in workstations where localized illumination is needed. Outdoor LED fixtures with full cutoff optics will provide security and pathway lighting while minimizing glare and light pollution. All fixtures will comply with Title 24, Part 6 for energy efficiency and lighting quality.
22	Lamp and Ballast Types	The design will use high-efficiency LED lamps throughout the facility to ensure energy savings, long lifespan, and low maintenance while complying with Title 24, Part 6. Fixtures will incorporate integrated LED drivers instead of traditional ballasts to improve performance and reduce flicker. Dimmable LED technology will be used in spaces requiring lighting control flexibility, while color temperatures between 3500K and 4000K will provide a balanced, comfortable environment. No fluorescent or HID ballasts will be considered due to inefficiency and high maintenance costs.
23	Control Types	The indoor lighting controls will include occupancy sensors for automatic on/off operation in offices, classrooms, restrooms, and common areas to reduce energy waste. Daylight sensors will adjust artificial lighting based on available natural light to optimize efficiency. Dimmable controls will be provided in multi-use spaces to allow flexibility for different activities. Time-based scheduling will be used for general lighting, with overrides available for after-hours use. BAS integration will enable remote monitoring, demand response, and system optimization to ensure compliance with Title 24, Part 6 while maintaining occupant comfort and energy efficiency.

STATE OF CALIFORNIA
Nonresidential Building Commissioning
CALIFORNIA ENERGY COMMISSION

CERTIFICATE OF COMPLIANCE		NRCC-CXR-E
Project Name: University Center College of the Sequoias Visalia Campus	**Report Page:**	**(Page 15 of 23)**
	Date Prepared:	2025-02-12T18:57:41-05:00

24	Control Intent Narrative/ Sequence of Operations	The control system optimizes energy efficiency, comfort, and compliance with Title 24, Part 6 through BAS integration. HVAC maintains 68-72°F heating, 74-78°F cooling, with setbacks to 55-60°F heating, 85°F cooling during unoccupied hours. DCV adjusts ventilation based on CO$_2$ levels, and lighting uses occupancy and daylight sensors with limited manual override. Water heating operates on demand, with recirculation pump scheduling to reduce energy waste.
25	Response to OPR Document	The indoor lighting design meets the Owner's Project Requirements (OPR) by ensuring energy efficiency, occupant comfort, and compliance with Title 24, Part 6. LED fixtures with dimming, occupancy sensors, and daylight controls optimize performance while reducing energy costs. Balanced color temperatures and glare control enhance visual comfort for various tasks. BAS integration allows remote monitoring and scheduling, ensuring flexibility and long-term efficiency.
Outdoor Lighting System Basis of Design		
26	Outdoor Lighting System Narrative	The outdoor lighting system will use high-efficiency LED fixtures for pathways, parking lots, and building exteriors. Photocells and time-based controls will automate operation, ensuring lights activate at dusk and turn off at dawn or per schedule. Motion sensors will enhance security while reducing unnecessary energy use. Full cutoff optics will minimize glare and light pollution, ensuring compliance with Title 24, Part 6.
27	Fixture Types	The design includes LED recessed fixtures for offices and classrooms, linear LED fixtures for hallways, and pendant or downlights for lobbies and gathering spaces. Task lighting will be used in work areas, while outdoor LED fixtures with full cutoff optics will provide security and pathway lighting. All fixtures will comply with Title 24, Part 6 for efficiency and performance.
28	Lamp and Ballast Types	The design considers LED lamps for their energy efficiency and long lifespan, with integrated LED drivers to replace traditional ballasts. Dimmable LEDs will be used where flexibility is needed, and the color temperature will range from 3500K to 4000K for optimal lighting quality. This ensures compliance with Title 24, Part 6 and meets the owner's efficiency and maintenance goals.
29	Control Types	The outdoor lighting system will include photocells for automatic on/off control based on daylight, motion sensors for security lighting, and time-based scheduling for consistent operation. BAS integration will enable remote control and demand response capabilities. These features ensure energy efficiency, security, and compliance with Title 24, Part 6 while meeting the owner's needs.

STATE OF CALIFORNIA
Nonresidential Building Commissioning
CALIFORNIA ENERGY COMMISSION

CERTIFICATE OF COMPLIANCE		NRCC-CXR-E
Project Name: University Center College of the Sequoias Visalia Campus	**Report Page:**	**(Page 16 of 23)**
	Date Prepared:	2025-02-12T18:57:41-05:00

30	Control Intent Narrative/ Sequence of Operations	The control system aims to optimize energy efficiency, occupant comfort, and operational performance while meeting Title 24, Part 6 requirements. HVAC systems will maintain 68-72°F heating and 74-78°F cooling during occupancy, with setbacks to 55-60°F heating and 85°F cooling during unoccupied hours. Lighting controls will include occupancy sensors and daylight harvesting to reduce energy consumption. Water heating will use demand-based controls and recirculation pump scheduling to minimize energy waste. All systems will be integrated with the BAS for monitoring, scheduling, and fault detection.
31	Response to OPR Document	The control system aims to optimize energy efficiency, occupant comfort, and operational performance while meeting Title 24, Part 6 requirements. HVAC systems will maintain 68-72°F heating and 74-78°F cooling during occupancy, with setbacks to 55-60°F heating and 85°F cooling during unoccupied hours. Lighting controls will include occupancy sensors and daylight harvesting to reduce energy consumption. Water heating will use demand-based controls and recirculation pump scheduling to minimize energy waste. All systems will be integrated with the BAS for monitoring, scheduling, and fault detection.
Water Heating System Basis of Design		
32	Water Heating System Narrative	Generally describe the water heating system which will be commissioned.
33	Water Heating Load Calculations	The load calculation methodology follows ASHRAE 90.1, ASHRAE 62.1, and Title 24, Part 6 to ensure compliance with the OPR document. Heating and cooling loads are determined using hourly climate data, internal heat gains, occupancy schedules, and envelope performance. Peak loads account for solar heat gain, ventilation requirements, infiltration, and equipment loads. Diversity factors and zoning strategies are applied to optimize system capacity and efficiency. The calculations ensure right-sized equipment selection to balance energy efficiency, occupant comfort, and operational reliability while preventing over-sizing or under-sizing.
34	Response to OPR Document	The water heating design is the best choice to meet the Owner's Project Requirements (OPR) because it prioritizes energy efficiency, reliability, and compliance with Title 24, Part 6. The system includes high-efficiency condensing boilers or heat pump water heaters, reducing energy consumption and operating costs. Insulated storage tanks, recirculation pumps, and demand-based controls ensure a consistent hot water supply while minimizing standby losses. BAS integration enables remote monitoring, fault detection, and scheduling for optimized performance. The design enhances long-term durability, reduces environmental impact, and meets occupancy demands efficiently.

STATE OF CALIFORNIA
Nonresidential Building Commissioning
CALIFORNIA ENERGY COMMISSION

CERTIFICATE OF COMPLIANCE		NRCC-CXR-E
Project Name: University Center College of the Sequoias Visalia Campus	**Report Page:**	**(Page 17 of 23)**
	Date Prepared:	2025-02-12T18:57:41-05:00

I. CONSTRUCTION DOCUMENT DESIGN REVIEW CHECKLIST

This table is only completed if a design review document is not attached to permit application to demonstrate compliance with 120.8(b) and 120.8(e). For buildings with >= 10,000 ft^2 conditioned floor area, the design review will ensure the construction documents meet the Owner's Project Requirements (Table G.) and the Basis of Design Documents (Table H.). For buildings with < 10,000 ft^2 conditioned floor area, the design review will ensure the construction documents meet the goals documented in Table F. during the Design Review Kickoff.

		YES	NO
01	Attaching Completed Design Review Documentation?	○	●

Design Review Checklist		
02	Envelope Design	The envelope design in the contract documents meets the Owner's Project Requirements (OPR) and Basis of Design (BOD) by optimizing insulation, airtightness, and fenestration performance to enhance energy efficiency and occupant comfort. The design incorporates high R-value walls, low U-value windows, and strategic shading to minimize heat transfer and HVAC loads while complying with Title 24, Part 6. During the design review, issues such as thermal bridging at structural connections, window-to-wall ratio compliance, and air leakage concerns were identified. These were resolved by adjusting insulation details, refining window placement, and improving air barrier continuity to ensure performance goals were met.
03	HVAC System Design	The HVAC system design in the contract documents meets the Owner's Project Requirements (OPR) and Basis of Design (BOD) by prioritizing energy efficiency, occupant comfort, and system reliability while complying with Title 24, Part 6. The system incorporates high-efficiency heating and cooling equipment, demand-controlled ventilation (DCV), and energy recovery ventilators (ERVs) to optimize performance and minimize energy waste. Zoning strategies and BAS integration allow for precise temperature control and airflow management, ensuring indoor air quality and thermal comfort. During the design review, issues such as equipment sizing discrepancies, airflow balancing concerns, and space constraints for mechanical systems were identified. These were resolved by refining load calculations, adjusting ductwork layouts, and optimizing mechanical room configurations to meet design intent and operational efficiency. The final design ensures low operating costs, ease of maintenance, and long-term system durability while fully aligning with the OPR and BOD.
04	HVAC Controls Design	The HVAC controls design in the contract documents meets the Owner's Project Requirements (OPR) and Basis of Design (BOD) by ensuring efficient system operation, occupant comfort, and energy optimization while complying with Title 24, Part 6. The controls include BAS integration for centralized monitoring, scheduling, fault detection, and trend logging to enhance system performance and maintenance efficiency. Demand-controlled ventilation (DCV), temperature setbacks, and adaptive load management optimize energy use while maintaining indoor air quality and thermal comfort. During the design review, issues such as sensor placement inconsistencies, sequence of operations conflicts, and BAS interoperability concerns were identified. These were resolved by revising sensor layouts, refining control sequences, and ensuring compatibility between control components and the BAS. The final design provides seamless automation, reduced energy waste, and intuitive system management, fully aligning with the OPR and BOD.
05	Indoor Lighting System Design	None
06	Indoor Lighting Controls Design	None

STATE OF CALIFORNIA
Nonresidential Building Commissioning
CALIFORNIA ENERGY COMMISSION

CERTIFICATE OF COMPLIANCE		NRCC-CXR-E
Project Name: University Center College of the Sequoias Visalia Campus	**Report Page:**	**(Page 18 of 23)**
	Date Prepared:	2025-02-12T18:57:41-05:00

I. CONSTRUCTION DOCUMENT DESIGN REVIEW CHECKLIST		
07	Outdoor Lighting System and Controls Design	None
08	Water Heating System Design	The water heating design meets the Owner's Project Requirements (OPR) by using high-efficiency condensing boilers and heat pump systems, along with insulated storage tanks and demand-based recirculation controls. Issues with recirculation loop efficiency were resolved by optimizing pump sizing and adjusting piping layout for better performance and energy savings.
09	Other Systems and Features	The design reflected in the contract documents aligns with owner requirements and the Basis of Design (BOD) by ensuring functionality, efficiency, and maintainability across systems beyond envelope, lighting, HVAC, and water heating. Key areas include building automation, electrical distribution, fire protection, and specialty systems (e.g., security, communications). The design integrates code compliance, ease of use, and long-term reliability to meet operational expectations. During design review, issues such as system integration conflicts, control sequencing discrepancies, and space constraints for equipment were identified. These were resolved by coordinating disciplines, refining control logic, and adjusting layouts to maintain compliance with the Owner's Project Requirements (OPR) while optimizing system performance.

J. COMMISSIONING PLAN

This table is only completed if a Commissioning Plan document is not attached to permit application to demonstrate compliance with 120.8(f). Per 120.8(f), the Commissioning Plan is to be started during the design phase and a completed draft must be submitted with permit application

		YES	NO
01	Attaching Completed Commissioning Plan?	○	●
02	Commissioning Plan Authors and Roles	Alex Rodriguez Commissioning Agent	

Commissioning Provider Information

03	Company Name	Net Positive Consulting Engineers	05	Contact Email	arodriguez@npceng.com
04	Contact Person	Alex Rodriguez	06	Contact Phone	(559) 939-4086

Commissioning Process Overview		
07	Owner Goals	The goals for the commissioning process include ensuring that all systems meet code requirements such as Title 24, Part 6, and that the systems function as outlined in the Owner's Project Requirements (OPR) and Basis of Design (BOD). The process will verify that HVAC, lighting, and water heating systems perform efficiently, are correctly calibrated, and operate according to the design intent. Additionally, it will confirm that systems are optimized for energy efficiency, occupant comfort, and long-term reliability, and that operational training and documentation are provided to support facility management.

IDENTIFICATION STAMP
DIV. OF THE STATE ARCHITECT
APP: 02-122821 INC: 2
REVIEWED FOR
SS ☑ FLS ☑ ACS ☑
DATE: 11/20/2025

Teter, Inc. expressly reserves its common law copyright and other property rights in these plans. This document, the ideas and designs incorporated herein, as an instrument of professional service, is not to be used in whole or in part, for any other project without prior written authorization.

MARK	DATE	DESCRIPTION
A	11/13/2025	DSA BACKCHECK

REGISTERED PROFESSIONAL ENGINEER
STEVEN A. JONES
MECHANICAL
STATE OF CALIFORNIA

TETER, INC.
FRESNO HEADQUARTERS
VISALIA | BAKERSFIELD | MODESTO | SAN LUIS OBISPO
ARCHITECTS ENGINEERS CONNECTED
TETER

VISALIA CAMPUS UNIVERSITY CENTER
COLLEGE OF THE SEQUIOAS
915 S. MOONEY BLVD
VISALIA, CALIFORNIA

DRAWING TITLE
TITLE 24 DOCUMENTATION

PROJECT NO.
22-12498

DRAWING
M919.2

PLOT DATE: 8/19/2025 10:23:55 PM

I. CONSTRUCTION DOCUMENT DESIGN REVIEW CHECKLIST

07	Outdoor Lighting System and Controls Design	None
08	Water Heating System Design	The water heating design meets the Owner's Project Requirements (OPR) by using high-efficiency condensing boilers and heat pump systems, along with insulated storage tanks and demand-based recirculation controls. Issues with recirculation loop efficiency were resolved by optimizing pump sizing and adjusting piping layout for better performance and energy savings.
09	Other Systems and Features	The design reflected in the contract documents aligns with owner requirements and the Basis of Design (BOD) by ensuring functionality, efficiency, and maintainability across systems beyond envelope, lighting, HVAC, and water heating. Key areas include building automation, electrical distribution, fire protection, and specialty systems (e.g., security, communications). The design integrates code compliance, ease of use, and long-term reliability to meet operational expectations. During design review, issues such as system integration conflicts, control sequencing discrepancies, and space constraints for equipment were identified. These were resolved by coordinating disciplines, refining control logic, and adjusting layouts to maintain compliance with the Owner's Project Requirements (OPR) while optimizing system performance.

J. COMMISSIONING PLAN

This table is only completed if a Commissioning Plan document is not attached to permit application to demonstrate compliance with 120.8(f). Per 120.8(f), the Commissioning Plan is to be started during the design phase and a completed draft must be submitted with permit application

01	Attaching Completed Commissioning Plan?		YES ○	NO ●	
02	Commissioning Plan Authors and Roles		Alex Rodriguez Commissioning Agent		
Commissioning Provider Information					
03	Company Name	Net Positive Consulting Engineers	05	Contact Email	arodriguez@npceng.com
04	Contact Person	Alex Rodriguez	06	Contact Phone	(559) 939-4086
Commissioning Process Overview					
07	Owner Goals	The goals for the commissioning process include ensuring that all systems meet code requirements such as Title 24, Part 6, and that the systems function as outlined in the Owner's Project Requirements (OPR) and Basis of Design (BOD). The process will verify that HVAC, lighting, and water heating systems perform efficiently, are correctly calibrated, and operate according to the design intent. Additionally, it will confirm that systems are optimized for energy efficiency, occupant comfort, and long-term reliability, and that operational training and documentation are provided to support facility management.			

J. COMMISSIONING PLAN

08	Roles and Responsibilities	The commissioning provider oversees the process, ensuring systems meet design goals and compliance. The owner/representative ensures alignment with project goals. The design team creates systems that meet code and performance requirements, while the construction manager ensures project milestones are met. Contractors install systems, with the CATT handling testing and compliance. The testing and balancing contractor ensures proper system balance, and equipment suppliers provide and ensure equipment meets specifications. The building inspector confirms code compliance.
09	Schedule	The commissioning and acceptance testing process will be integrated into the construction schedule by starting early with pre-installation reviews and continuing through system installation and startup. Testing will occur after equipment installation and prior to system handover, with key milestones set for functional performance tests, adjustments, and verification. The process will be closely coordinated with the construction manager to ensure that testing does not delay other construction activities. Acceptance testing will occur once systems are fully operational, and any necessary adjustments will be made before final handover.
Commissioning Activities During Construction		
10	Construction Observation	Jobsite observations will be conducted throughout the construction phase, with key points during installation, system startup, and pre-functional testing. The intent of these observations is to ensure compliance with design specifications, identify any installation issues, and verify that systems are being installed and configured correctly. Observations also aim to assess quality control, identify potential system conflicts, and ensure that all equipment is properly installed for commissioning and acceptance testing.
11	Issues Logs	Issues logs will be used to track and document any discrepancies, non-compliance, or unresolved issues identified during commissioning and testing. These logs will be regularly updated and submitted to the commissioning provider, construction manager, and design team for review and resolution. Once issues are addressed, they will be retested and the logs updated for recertification. The final, verified issues log will be submitted to the owner/representative for approval before project completion.
12	Installation Verification	The installation verification process includes reviewing the installation of equipment, systems, and components to ensure compliance with design specifications. The commissioning provider will conduct visual inspections, confirm proper system configuration, and ensure all components are installed per the design documents. Contractors are responsible for ensuring their installations follow manufacturer guidelines and meet code requirements. The design team will verify that the installations align with the Basis of Design (BOD)
13	Functional Performance Testing	During functional performance testing, the Commissioning Provider will oversee the process to ensure systems operate as intended, aligning with the Owner's Project Requirements (OPR) and Basis of Design (BOD). The Acceptance Test Technician (CATT) will conduct the actual testing, using specified test procedures to measure system performance and document results. The Subcontractors will provide support by ensuring all equipment is correctly installed, adjusted, and operating as required for testing. The Commissioning Provider will review test results, coordinate issue resolution, and ensure that all systems pass the performance tests before final acceptance.

J. COMMISSIONING PLAN

14	Documentation and Training	The Commissioning Provider will review the operation manuals to ensure they include accurate information about system operation, maintenance, and troubleshooting procedures. The provider will coordinate with the design team and contractors to ensure manuals meet project requirements. Following the review, the Commissioning Provider will facilitate training sessions for the owner and maintenance staff to ensure they understand the system's operation, controls, and preventive maintenance needs. These sessions will cover daily operation, system adjustments, troubleshooting, and how to use the BAS for monitoring and control.

K. FUNCTIONAL PERFORMANCE TESTING

The table below is completed to demonstrate compliance with functional performance testing requirements per 120.8(g).

By checking this box, the responsible party[1] certifies that functional performance testing will be executed to demonstrate the correct installation and operation of each component, system and system-to-system interface in accordance with the acceptance test requirements in 120.5, 130.4 and 140.9. The functional performance testing reports shall contain information addressing each of the building components tested, the testing methods utilized, and include any readings and adjustments made.	01 ☒

The following acceptance tests have been identified as applicable to the project scope:[2]

02	03	04	05
System/ Equipment to be Tested	Brief description of functional performance test	Applicable Reference Appendix	Certified Acceptance Test Technician Required?
The system name or item tag for acceptance testing will include Water Heating System, HVAC System, Air Handling Units (AHUs), Lighting Control System, Building Automation System (BAS), and Chiller Plant, depending on the equipment being tested.	The acceptance test for the Water Heating System will include verifying that the system meets temperature setpoints, flow rates, and energy consumption requirements. It will also ensure that demand-based recirculation works efficiently and the system operates as intended under full load conditions. For the HVAC System, the test will check temperature control, airflow distribution, and integration with the BAS to ensure proper function and energy efficiency. Each system will undergo functional performance tests, checking that all components meet design specifications and OPR requirements.	NA7.5.4 Air Economizer Controls & Exhaust Heat Recovery	Yes

The acceptance tests required by Title 24, Part 6 outline the minimum functional performance testing scope to be conducted for compliance. However, the commissioning scope may include additional functional performance tests on systems or equipment not having acceptance tests required by Title 24 Part 6.

The following additional functional performance tests have been requested by the owner or owner's representative:

06	07

K. FUNCTIONAL PERFORMANCE TESTING

System/ Equipment to be Tested	Brief description of functional performance test
The system name or item tag for functional performance testing will include Water Heating System, HVAC System, Air Handling Units (AHUs), Lighting Control System, Building Automation System (BAS), and Chiller Plant, depending on the specific system being tested.	The functional performance test will verify that the HVAC system, water heating system, and other components operate as intended. For the HVAC system, this includes checking temperature control, airflow, and system response to setpoints. For the water heating system, the test will assess temperature consistency, flow rates, and energy efficiency. Each system will be tested for integration with the BAS and compliance with the OPR and design specifications.

[1] *FOOTNOTE: See the signature block on the last page of this compliance document for the responsible party.*
[2] *Required acceptance tests can be determined by reviewing the "Certificates of Acceptance" table on each Certificate of Compliance submitted for permit application.*

L. DOCUMENTATION AND TRAINING

The table below is completed to demonstrate compliance with documentation and training requirements per 120.8(h)

By checking this box, the responsible party[1] certifies that a systems manual will be provided to the building owner or representative per 120.8(h)1.	01 ☒
By checking this box, the responsible party[1] certifies that a training of the appropriate maintenance staff for each equipment and system will be completed and documented in the commissioning report per 120.8(h)2. Training requirements should be included in the contract document in the specifications.	02 ☒

[1] *FOOTNOTE: See the signature block on the last page of this compliance document for the responsible party.*

M. COMMISSIONING REPORT

The table below is completed to demonstrate compliance with commissioning report requirements per 120.8(i)

By checking this box, the responsible party[1] certifies that a complete report of commissioning process' activities undertaken through the design, construction and reporting recommendations for post-construction phases of the building project shall be completed and provided to the owner or owner's representative.	01 ☒

[1] *FOOTNOTES: See the signature block on the last page of this compliance document for the responsible party.*

N. DECLARATION OF REQUIRED CERTIFICATES OF INSTALLATION

There are no forms required for this project.

O. DECLARATION OF REQUIRED CERTIFICATES OF ACCEPTANCE

There are no forms required for this project.

DOCUMENTATION AUTHOR'S DECLARATION STATEMENT

I certify that this Certificate of Compliance documentation is accurate and complete.

Documentation Author Name: Alex Rodriguez	Documentation Author Signature:
Company: Net Positive Consulting Engineers	Signature Date: 2025-02-12
Address: 5 River Park PL E Ste 303	CEA/ HERS Certification Identification (if applicable):
City/State/Zip: Fresno, CA, 93720	Phone: 559-939-4086

RESPONSIBLE PERSON'S DECLARATION STATEMENT

I certify the following under penalty of perjury, under the laws of the State of California:

1. The information provided on this Certificate of Compliance is true and correct.
2. I am eligible under Division 3 of the Business and Professions Code to accept responsibility for the building design or system design identified on this Certificate of Compliance (responsible designer)
3. The energy features and performance specifications, materials, components, and manufactured devices for the building design or system design identified on this Certificate of Compliance conform to the requirements of Title 24, Part 1 and Part 6 of the California Code of Regulations.
4. The building design features or system design features identified on this Certificate of Compliance are consistent with the information provided on other applicable compliance documents, worksheets, calculations, plans and specifications submitted to the enforcement agency for approval with this building permit application.
5. I will ensure that a completed signed copy of this Certificate of Compliance shall be made available with the building permit(s) issued for the building, and made available to the enforcement agency for all applicable inspections. I understand that a completed signed copy of this Certificate of Compliance is required to be included with the documentation the builder provides to the building owner at occupancy.

Responsible Designer Name: Jon Coulter	Responsible Designer Signature:
Company: Teter, INC.	Date Signed: 2025-02-12
Address: 10000 Stockdale Highway	License:
City/State/Zip: Bakersfield, CA, 93311	Phone: (661) 843-8400

IDENTIFICATION STAMP
DIV. OF THE STATE ARCHITECT
APP: 02-122821 INC: 2
REVIEWED FOR
SS ☑ FLS ☑ ACS ☑
DATE: 11/20/2025

Teter, Inc. expressly reserves its common law copyright and other property rights in these plans. This document, the ideas and designs incorporated herein, as an instrument of professional service, is not to be used in whole or in part, for any other project without prior written authorization.

MARK	DATE	DESCRIPTION
A	11/13/2025	DSA BACKCHECK

TETER, INC.
FRESNO HEADQUARTERS
VISALIA | BAKERSFIELD | MODESTO | SAN LUIS OBISPO
ARCHITECTS ENGINEERS CONNECTED

VISALIA CAMPUS UNIVERSITY CENTER
COLLEGE OF THE SEQUOIAS
915 S. MOONEY BLVD
VISALIA, CALIFORNIA

DRAWING TITLE
TITLE 24 DOCUMENTATION

PROJECT NO.
22-12498

DRAWING
M920.2

\\tet-file-1\Users\zachary.davis_TETR\Documents\12498-M-UC_zachary.davis@WYRV.rvt
PLOT DATE: 8/19/2025 10:24:00 PM

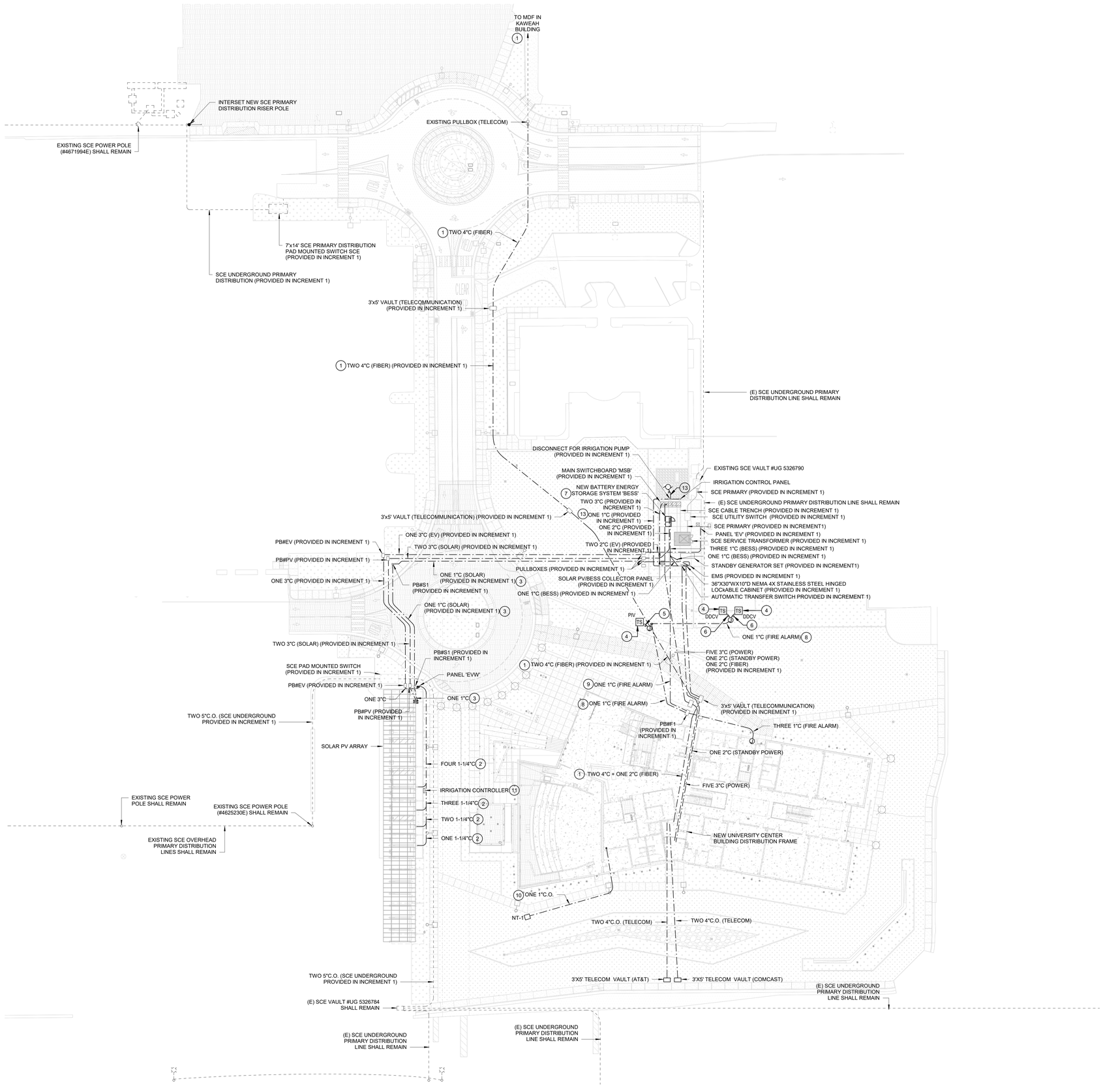

KEYNOTES

1. PROVIDE NEW FIBER OPTIC CABLE, TYPE 'FO' CABLE, BETWEEN NEW UNIVERSITY CENTER BUILDING DISTRIBUTION FRAME AND CAMPUS MAIN DISTRIBUTION FRAME LOCATED IN KAWEAH BUILDING.
2. PROVIDE 2#8 CU THWN AND 1#10 CU GND IN EACH CONDUIT FOR CONNECTION TO ELECTRICAL VEHICLE CHARGER.
3. PROVIDE ONE RS485 COMMUNICATION CABLE BELDEN 3106A INSTALLED BETWEEN INVERTERS AND TO ENERGY MANAGEMENT SYSTEM MODBUS INTERFACE PER MANUFACTURER'S INSTRUCTIONS.
4. TAMPEER SWITCHES LOCATED AT POST INDICATOR VALVE (PIV) AND DOUBLE DETECTOR CHECK VALVES SHALL BE MONITORED BY INDIVIDUAL FIRE ALARM SYSTEM ADDRESSABLE MODULES. REFER TO FIRE ALARM RISER DIAGRAM FOR ADDITIONAL INFORMATION
5. PROVIDE WEATHERPROOF CONNECTION TO TAMPER SWITCH AT POST INDICATOR VALVE.
6. PROVIDE WEATHERPROOF CONNECTIONS TO TWO TAMPER SWITCHES AT DOBULE DETECTOR CHECK VALVE PER DETAIL 5/E600.2.
7. BATTERY ENGERGY STORAGE SYSTEM SHALL BE MONITORED BY INDIVIDUAL FIRE ALARM SYSTEM ADDRESSABLE MODULES. REFER TO FIRE ALARM RISER DIAGRAM FOR ADDITIONAL INFORMATION.
8. PROVIDE ONE TYPE 'FAS' CABLE.
9. PROVIDE TWO TYPE 'FAS' CABLE.
10. PROVIDE ONE 1"C.O. FROM NEUTRALIZATION TANK 'NT-1' TO NEUTRALIZATION TANK CONTROLLER.
11. DISCONNECT EXISTING IRRIGATION CONTROLLER. PRESERVE EXISTING CONDUIT AND EXISTING CONDUCTORS FOR RE-CONNECTION OF NEW IRRIGATION CONTROLLER. REFER TO LANDSCAPE DRAWINGS.
12. PROVIDE ONE 1"C WITH 3#8 CU THWN AND 1#8 CU GND AND PROVDIE CONNECTION TO 480V, 3-PHASE, 15HP IRRIGATION PUMP.
13. PROVIDE 2#10 CU THWN AND 1#10 CU GND AND PROVIDE CONNECTION TO 120V, SINGLE PHASE IRRIGATION PUMP CONTROLLER.

GENERAL NOTES

A. PROVIDE ELECTRICAL FEEDERS PER SINGLE LINE DIAGRAM.

B. NEW UNDERGROUND SCE PRIMARY DISTRIBUTION CONDUIT SHALL BE INSTALLED WITHIN NEW EASEMENT PREPARED BY CIVIL ENGINEER. REFER TO CIVIL DRAWINGS.

C. PROVIDE PULLBOXES PER DETAIL 2/E600.2.

D. SITE CONDUITS OF TRADE SIZE 2" AND LARGER SHALL BE GROUPED AND INSTALLED PER DETAIL 12/E600.2. SITE CONDUITS SHALL BE INSTALLED A MINIMUM OF 36" BELOW FINAL GRADE TO TOP OF CONDUIT.

E. SPECIAL PRECAUTION SHALL BE TAKEN WHEN TRENCHING TO LOCATE, PROTECT AND PRESERVE EXISTING UNDERGROUND UTILITIES. ANY DAMAGE CAUSED DURING THE COURSE OF CONSTRUCTION SHALL BE IMMEDIATELY REPAIRED.

F. REFER TO DRAWINGS E101.2 FOR ADDITIONAL ELECTRICAL WORK FOR SITE LIGHTING.

G. REFER TO DRAWING E102.2 FOR ADDITIONAL ELECTRICAL WORK FOR ELECTRIC VEHICLE CHARGING AND SOLAR.

ELECTRICAL SITE PLAN

1" = 30'-0" | 1

IDENTIFICATION STAMP
DIV. OF THE STATE ARCHITECT
APP: 02-122821 INC: 2
REVIEWED FOR
SS ☑ FLS ☑ ACS ☑
DATE: 11/20/2025

Teter, Inc. expressly reserves its common law copyright and other property rights in these plans. This document, the ideas and designs incorporated herein, as an instrument of professional service, is not to be used in whole or part, for any other project without prior written authorization.

MARK	DATE	DESCRIPTION
A.	11/13/2025	DSA BACKCHECK

08/21/2025

TETER, INC.
FRESNO HEADQUARTERS
VISALIA | BAKERSFIELD | MODESTO | SAN LUIS OBISPO
ARCHITECTS ENGINEERS CONNECTED

VISALIA CAMPUS UNIVERSITY CENTER
COLLEGE OF THE SEQUOIAS
915 S. MOONEY BLVD
VISALIA, CA

DRAWING TITLE
ELECTRICAL SITE PLAN

PROJECT NO.
22-12498

DRAWING
E100.2

PLOT DATE: 9/4/2025 3:50:10 PM

\\tet-file1\Users\gene.vea_TETR\Documents\12498-E-UC_gene.vea.rvt

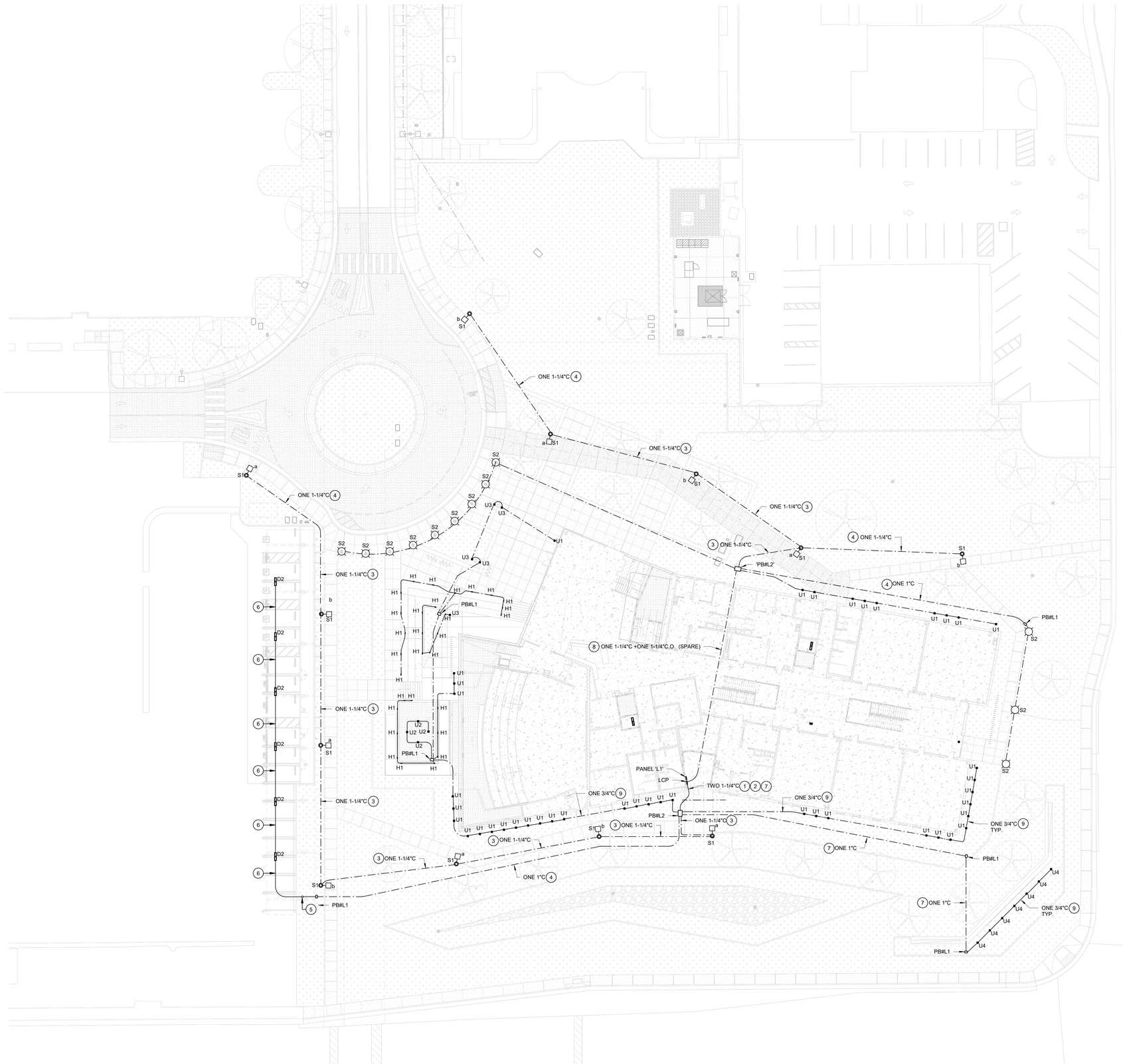

PROJECT NORTH NORTH

ELECTRICAL SITE LIGHTING PLAN

1" = 20'-0" | 1

KEYNOTES

1. PROVIDE ONE 1-1/4"C WITH 4#12 CU THWN AND 2#12 CU GND FOR SOUTHEAST LIGHT FIXTURES.
2. PROVIDE ONE 1-1/4"C WITH 6#10 CU THWN AND 3#10 CU GND FOR CONNECTION TO SOUTH AND WEST LIGHT FIXTURES.
3. PROVIDE 1"C WITH 3#10 CU THWN + 1#10 CU GND.
4. PROVIDE 1"C WITH 2#10 CU THWN + 1#10 CU GND.
5. TRANSITION 3/4"C (PVC) TO 3/4"C (GRC) TO BE SURFACE MOUNTED ON CARPORT CANOPY COLUMN.
6. SURFACE MOUNT 3/4"C (GRC) WITH 2#10 CU THWN + 1#10 CU GND TO CARPORT STEEL AND PROVIDE CONNECTION TO LIGHT FIXTURE.
7. PROVIDE 1"C WITH 2#10 CU THWN + 1#10 CU GND FOR SITE SIGNAGE LIGHTS.
8. PROVIDE ONE 1-1/4"C WITH 9#10 CU THWN AND 4#10 CU GND FOR CONNECTION TO NORTH LIGHT FIXTURES.
9. PROVIDE ONE 3/4"C (UNDERGROUND) WITH 2#10 CU THWN AND 1#10 CU GND AND PROVIDE CONNECTION TO INGRADE LIGHT FIXTURES. TYPICAL BETWEEN INGRADE LIGHT FIXTURE U1.

GENERAL NOTES

A. PROVIDE ELECTRICAL FEEDERS PER SINGLE LINE DIAGRAM.

B. PROVIDE PULLBOXES PER DETAIL 1/E600.2.

C. SITE CONDUITS SHALL BE GROUPED AND INSTALLED PER DETAIL 2/E600.2. SITE CONDUITS SHALL BE INSTALLED A MINIMUM OF 36" BELOW FINAL GRADE TO TOP OF CONDUIT.

D. SPECIAL PRECAUTION SHALL BE TAKEN WHEN TRENCHING TO LOCATE, PROTECT AND PRESERVE EXISTING UNDERGROUND UTILITIES. ANY DAMAGE CAUSED DURING THE COURSE OF CONSTRUCTION SHALL BE IMMEDIATELY REPAIRED.

E. EXTERIOR LIGHT FIXTURES TO BE CONTROLLED VIA ASTRONOMICAL TIME CLOCK FROM LIGHITNG CONTROL PANEL 'LCP' (nLIGHT ARP RELAY PANEL). REFER TO LIGHTING CONTROL PANEL SCHEDULE ON E805.2 FOR LCP CIRCUITING.

IDENTIFICATION STAMP
DIV. OF THE STATE ARCHITECT
APP: 02-122821 INC: 2
REVIEWED FOR
SS ☑ FLS ☑ ACS ☑
DATE: 11/20/2025

Teter, Inc. expressly reserves its common law copyright and other property rights in these plans. This document, the ideas and designs incorporated herein, as an instrument of professional service, is not to be used in whole or part, for any other project without prior written authorization.

MARK	DATE	DESCRIPTION
A.	11/13/2025	DSA BACKCHECK

08/21/2025

TETER, INC.
FRESNO HEADQUARTERS
VISALIA | BAKERSFIELD | MODESTO | SAN LUIS OBISPO
ARCHITECTS ENGINEERS CONNECTED

VISALIA CAMPUS UNIVERSITY CENTER
COLLEGE OF THE SEQUOIAS
915 S. MOONEY BLVD
VISALIA, CA

DRAWING TITLE
ELECTRICAL SITE LIGHTING PLAN

PROJECT NO.
22-12498

DRAWING
E101.2

\\tet-file1\Users\gene.vea_TETER\Documents\12498-E-UC_gene.vea.rvt
PLOT DATE: 9/4/2025 3:50:23 PM

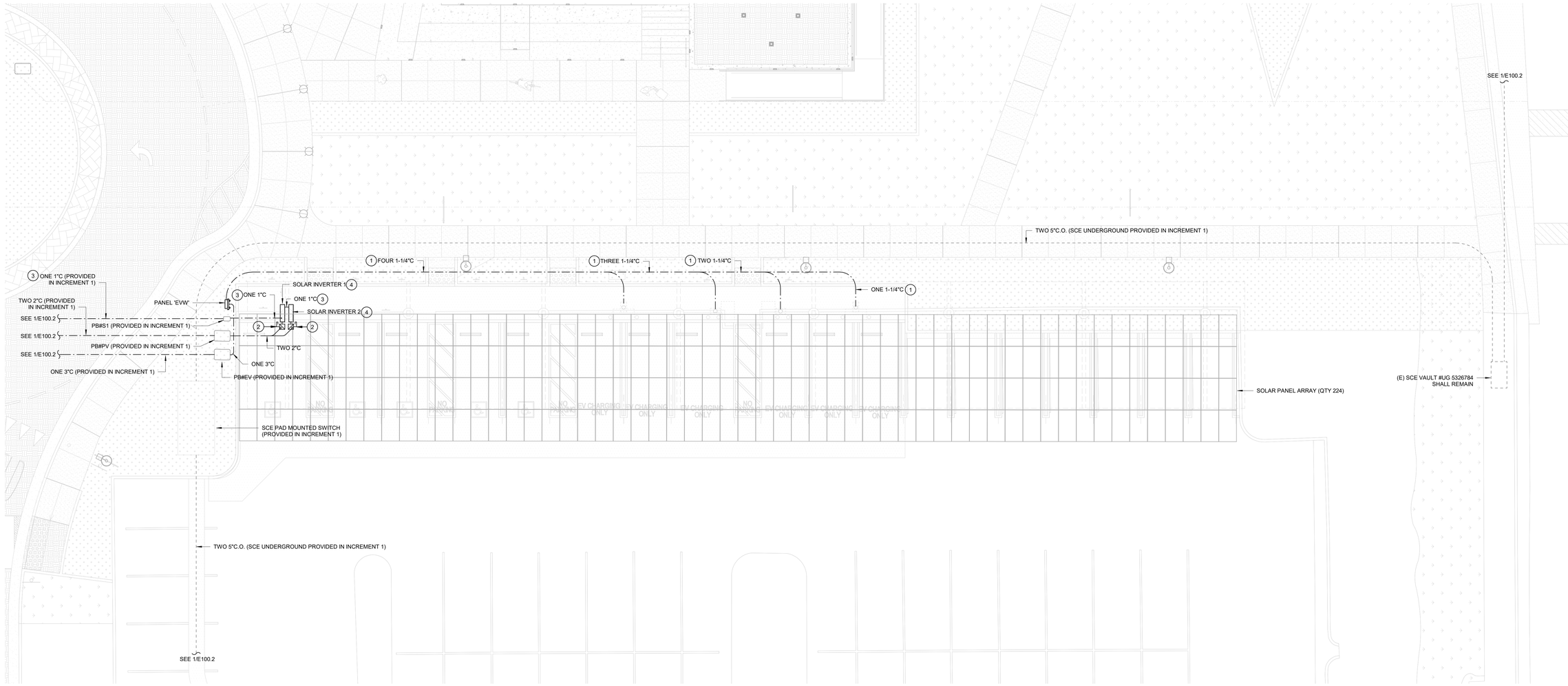

ENLARGED ELECTRICAL SITE PLAN - SOLAR ARRAY AND ELECTRIC VEHICLE

1/8" = 1'-0" | 1

KEYNOTES

1. PROVIDE 2#8 CU THWN AND 1#10 CU GND IN EACH CONDUIT. PROVIDE CONNECTION TO ELECTRICAL VEHICLE CHARGER.
2. PROVIDE HEAVY DUTY WEATHERPROOF NEMA 3R 600V, 100A FUSED DISCONNECT. PROVIDE CONNECTION TO SOLAR INVERTER.
3. PROVIDE ONE RS485 COMMUNICATION CABLE BELDEN 3106A INSTALLED BETWEEN INVERTERS AND TO ENERGY MANAGEMENT SYSTEM MODBUS INTERFACE PER MANUFACTURER'S INSTRUCTIONS.
4. PROVIDE MOUNTING OF SOLAR INVERTER AND DISCONNECT PER DETAILS 2/S-20 AND DETAIL 4/S-20.

GENERAL NOTES

A. PROVIDE ELECTRICAL FEEDERS PER SINGLE LINE DIAGRAM.

B. PROVIDE PULLBOXES PER DETAIL 2/E600.2.

C. SITE CONDUITS SHALL BE GROUPED AND INSTALLED PER DETAIL 12/E600.2. SITE CONDUITS SHALL BE INSTALLED A MINIMUM OF 36" BELOW FINAL GRADE TO TOP OF CONDUIT.

D. SPECIAL PRECAUTION SHALL BE TAKEN WHEN TRENCHING TO LOCATE, PROTECT AND PRESERVE EXISTING UNDERGROUND UTILITIES. ANY DAMAGE CAUSED DURING THE COURSE OF CONSTRUCTION SHALL BE IMMEDIATELY REPAIRED.

IDENTIFICATION STAMP
DIV. OF THE STATE ARCHITECT
APP: 02-122821 INC: 2
REVIEWED FOR
SS ☑ FLS ☑ ACS ☑
DATE: 11/20/2025

Teter, Inc. expressly reserves its common law copyright and other property rights in these plans. This document, the ideas and designs incorporated herein, as an instrument of professional service, is not to be used in whole or in part, for any other project without prior written authorization.

MARK	DATE	DESCRIPTION
A	11/13/2025	DSA BACKCHECK

08/21/2025

TETER, INC.
FRESNO HEADQUARTERS
VISALIA | BAKERSFIELD | MODESTO | SAN LUIS OBISPO
ARCHITECTS ENGINEERS CONNECTED

VISALIA CAMPUS UNIVERSITY CENTER
COLLEGE OF THE SEQUOIAS
915 S. MOONEY BLVD
VISALIA, CA

DRAWING TITLE
ENLARGED SITE ELECTRICAL PLAN - SOLAR ARRAY AND ELECTRIC VEHICLE

PROJECT NO.
22-12498

DRAWING
E102.2

\\tetr-file1\Users\gene.vea_TETR\Documents\12498-E-UC_gene.vea.rvt

PLOT DATE: 9/4/2025 3:50:28 PM

\\tet-file1\Users\gene.vea_TETER\Documents\12498-E-UC_gene.vea.rvt

IDENTIFICATION STAMP
DIV. OF THE STATE ARCHITECT
APP: 02-122821 INC: 2
REVIEWED FOR
SS ☑ FLS ☑ ACS ☑
DATE: 11/20/2025

Teter, Inc. expressly reserves its common law copyright and other property rights in these plans. This document, the ideas and designs incorporated herein, as an instrument of professional service, is not to be used in whole or in part, for any other project without prior written authorization.

MARK	DATE	DESCRIPTION
A.	11/13/2025	DSA BACKCHECK

08/21/2025

TETER, INC.
FRESNO HEADQUARTERS
VISALIA | BAKERSFIELD | MODESTO | SAN LUIS OBISPO
ARCHITECTS ENGINEERS CONNECTED

TO MAIN SWITCHBOARD 'MSB', REFER TO ELECTRICAL SITE PLAN

TO AUTOMATIC TRANSFER SWITCH, REFER TO ELECTRICAL SITE PLAN

FIVE 3"C (POWER)

ONE 2"C (STANDBY POWER)

TO RECEPTACLES ALONG UPPER STAIRWAY, REFER TO DRAWING E220.2

ACCESSIBLE LIFT CONTROL CABINET

WATER SOFTNER WSH

120V PROJECTOR SCREEN MOTOR

ACCESS CONTROL PANEL

SWITCHBOARD 'DPH'

DISCONNECT (STANDBY)

TRANSFORMER 'TDPL'

PANEL 'ACH5'

PANEL 'EQH1'

PANEL 'R2'

PANEL 'R1'

PANEL 'DPL'

PANEL 'EQL1'

PANEL 'L1'

LCP

PANEL 'R6'

ONE 1"C

REFER TO E100.2

ENTRY STUDY LAB 100
LECTURE 101
VESTIBULE 101A
VESTIBULE 101B
STO. 101C
STO. 101D
MECH. 102A
STO. 102
PROGRAM OFFICE 103
OFFICE 103A
OFFICE 103B
OFFICE 103C
MEETING 103D
OFFICE 104A
OFFICE 104B
OFFICE 104C
PROGRAM OFFICE 104
MEETING 104D
JAN. 108
UNISEX 107
ELEV.2 E2
COR. 105
WOMEN 109
MEN 110
CLASSROOM 111
COMPUTER LAB 112
MEET. 113
MEET. 114
OPEN STUDY LAB 128
OPEN STUDY LAB 129
COR. 127
COS ADMIN 120
OFFICE 120A
COR. 125
STO. 126
ELEV.1 E1
UNISEX 124
DATA 119
MEETING 118D
PROGRAM OFFICE 118
CLASSROOM 117
CLASSROOM 116
CLASSROOM 115
ELEC. 131
OFFICE 118C
OFFICE 118A
OFFICE 118B
WOMEN 122
MEN 123
STO. 130

NORTH

POWER PLAN - FIRST FLOOR

1/8" = 1'-0" | 1

KEYNOTES

1. PROVIDE HEAVY DUTY NEMA 3R 600V, 30A, 3-POLE FUSED DISCONNECT WITH 15A FUSES. PROVIDE CONNECTION TO 480V, 3-PHASE, 7.4 FLA VACUUM PUMP 'VP-1'
2. PROVIDE HEAVY DUTY NEMA 3R 600V, 60A, 3-POLE FUSED DISCONNECT WITH 40A FUSES. PROVIDE CONNECTION TO 480V, 3-PHASE, 21.5 FLA AIR COMPRESSOR 'AC-1'
3. PROVIDE ONE 1"C WITH 3#8 CU THWN AND 1#10 CU GND. PROVIDE CONNECTION FROM AIR COMPRESSOR CONTROL PANEL TO AIR COMPRESSOR MOTOR.
4. PROVIDE HEAVY DUTY NEMA 3R 250V, 30A, 3-POLE FUSED DISCONNECT WITH 30A FUSES. PROVIDE CONNECTION TO 208V, 3-PHASE, 11.32 FLA BOOSTER PUMP 'BP-1'.
5. PROVIDE HEAVY DUTY NEMA 3R 250V, 30A, 3-POLE FUSED DISCONNECT WITH 15A FUSES. PROVIDE CONNECTION TO 208V, 3-PHASE, 4.7 FLA REVERSE OSMOSIS (DIRS) 'RO-1'.
6. PROVIDE HEAVY DUTY NEMA 3R 250V, 60A, 3-POLE FUSED DISCONNECT WITH 40A FUSES. PROVIDE CONNECTION TO 208V, SINGLE PHASE, 17.9 FLA DEIONIZATION SYSTEM (DIRS) 'DI-1'.
7. PROVIDE SINGLE L5-20 RECEPTACLE FOR 120V SINGLE PHASE REVERSE OSMOSIS (MFXR41002) 'RO-1' UNIT.
8. PROVIDE SINGLE L5-20 RECEPTACLE FOR 120V SINGLE PHASE REVERSE OSMOSIS (MFXR41002) 'DI-1' UNIT.
9. PROVIDE GENERAL DUTY 250V, 30A, 3-POLE FUSED DISCONNECT WITH 20A FUSES. PROVIDE CONNECTION TO 208V, SINGLE PHASE WHEEL CHAIR ACCESIBILITY LIFT.
10. PROVIDE 120V, 15A POWER CONNECTION TO WATER HEATER 'WH-1' PER MANUFACTURER'S INSTRUCTIONS.
11. PROVIDE 120V, 15A POWER CONNECTION TO CIRCULATION PUMP 'CP-1' THRU SNAP SWITCH.
12. 20VA, 120VAC:24VAC FIRE SPRINKLER BELL LOW VOLTAGE TRANSFORMER. COORDINATE WITH FIRE PROTECTION CONTRACTOR AND RUN 24V CIRCUIT THROUGH RISER MOUNTED FLOW SWITCH CONTACT TO FIRE SPRINKLER BELL, SEE WIRE DIAGRAM DRAWING 20/E604.2.
13. PROVIDE 120V, 20A GFCI RECEPTACLE FOR DRINKING FOUNTAIN 'DF-1' PER MANUFACTURER'S INSTALLATION INSTRUCTIONS.
14. PROVIDE 120V, 20A RECEPTACLE FOR PROJECTOR. LOCATE RECEPTACLE ABOVE FREE FLOATING CEILING WITHIN 18" OF PROJECTOR MOUNT.
15. PROVIDE POWER CONNECTION TO AUTOMATIC SLIDING DOOR MOTOR OPERATOR THROUGH MULLION.
16. ONE 1-1/4"C, 3#2 CU THWN, 1#6 CU GND.
17. PROVIDE 2-GANG POWER FLOOR BOX RATED FOR SLAB ON-GRADE INSTALLATION WITH TWO DUPLEX RECEPTACLES AND COMBINATION CARPET AND TILE FLANGE AND TWO RECEPTACLE COVERPLATES; LEGRAND OMNI SERIES CAST IRON FLOOR BOX MODEL: 880CS2-NA-827B-828R. REFER TO STRUCTURAL DETAILS FOR THICKENED SLAB.
18. PROVIDE 6-GANG COMBINATION POWER AND TELECOMMUNICATION FLOOR BOX RATED FOR SLAB ON-GRADE INSTALLATION WITH DEVICE PLATES FOR TWO DUPLEX RECEPTACLES AND FOUR DATA OUTLETS, AND FLUSH SOLID BLACK LID; LEGRAND EVOLUTION SERIES MODEL: EFB6S-OG-EFB6810BTBK. REFER TO STRUCTURAL DETAILS FOR THICKENED SLAB.
19. PROVIDE 1-GANG POWER FLOOR BOX RATED FOR SLAB ON-GRADE INSTALLATION WITH TWO DUPLEX RECEPTACLES AND COMBINATION CARPET AND TILE FLANGE AND ONE RECEPTACLE COVERPLATE; LEGRAND OMNI SERIES CAST IRON FLOOR BOX MODEL: 880CS1-NA-817B-828R. REFER TO STRUCTURAL DETAILS FOR THICKENED SLAB.
20. PROVIDE ACOUSTIC SEALANT AND WRAP OUTLET BOXES WITH ACOUSTIC PUTTY PADS AT ALL CONDUIT AND OUTLET BOX PENETRATIONS IN LECTURE HALL WALLS, REFER TO ARCHITECTURAL REQUIREMENTS FOR ACOUSTIC TREATMENT.
21. ONE 1-1/4"C WITH 1#3/0 BARE COPPER GND TO TELECOMMUNICATIONS MAIN GROUNDING BUS LOCATED IN FIRST FLOOR DATA ROOM.
22. RATED WALL ASSEMBLY, TYPICAL. REFER TO ARCHITECTURAL DRAWINGS FOR RATED ASSEMBLY RATINGS AND PROVIDE FIRE STOPPING FOR PENETRATIONS PER FIRE STOPPING DETAILS.
23. ONE 1"C, 8#10 CU THHN, 2#10 CU GND.
24. PROVIDE 150A, 480V, 3-POLE ENCLOSED CIRCUIT BREAKER WITH PERMANENTLY INSTALLED LOCK OFF MECHANICS. PROVIDE LABEL INDICATING POWER SOURCE DISCONECT.
25. PROVIDE RECEPTACLES MOUNTED ON RACK REFER TO DETAIL 8/E604.2.
26. PROVIDE ONE 1"C.O. FROM NETRUALIZATION CONTROLLER 'NT-1' TO NEUTRALIZATION TANK 'NT-1'.
26. PROVIDE HEAVY DUTY 600V, 100A, 3-POLE FUSED DISCONNECT WITH 90A FUSES FOR CONNECTION TO 480V, 3-PHASE, 50HP ELEVATOR.
27. PROVIDE GENERAL DUTY 250V, 30A, SINGLE POLE FUSED DISCONNECT WITH 20A FUSE FOR ELEVATOR LIGHITNG.

GENERAL NOTES

A. PROVIDE ELECTRICAL FEEDERS PER SINGLE LINE DIAGRAM.

B. CONDUIT AND CONDUCTORS SHALL BE CONCEALED, U.O.N.

C. PENETRATIONS THROUGH WALLS, CEILINGS, FLOORS, AND/OR ROOFS SHALL BE SEALED.

D. ALL 120V, 15A AND 20A RECEPTACLES WITHIN KITCHENS, RESTROOMS INDOOR WET AREA, LOCKER ROOMS, GRAGES, SERVICE BAYS, ROOFTOP, AND OUTDOORS SHALL BE GFCI TYPE RECEPTACLES. IN ALL OTHER SPACES, 120V, 15A AND 20A RECEPTACLES WITHIN 6' OF SINKS OR FAUCETS SHALL BE GFCI TYPE RECEPTACLES.

E. PROVIDE FIRE STOPPING AT RATED WALL PENETRATIONS PER DRAWING E602.2, DETAILS 18, 28, AND 30.

F. PROVIDE FIRE STOPPING AT RATED FLOOR OR CEILING PENETRATIONS PER DRAWING E602.2, DETAIL 23.

VISALIA CAMPUS UNIVERSITY CENTER
COLLEGE OF THE SEQUOIAS
915 S. MOONEY BLVD
VISALIA, CA

DRAWING TITLE
POWER PLAN - FIRST FLOOR

PROJECT NO.
22-12498

DRAWING
E210.2

PLOT DATE: 9/4/2025 3:50:39 PM

\\tet-file1\Users\gene.vea_TETR\Documents\12498-E-UC_gene.vea.rvt

IDENTIFICATION STAMP
DIV. OF THE STATE ARCHITECT
APP: 02-122821 INC: 2
REVIEWED FOR
SS ☑ FLS ☑ ACS ☑
DATE: 11/20/2025

Teter, Inc. expressly reserves its common law copyright and other property rights in these plans. This document, the ideas and designs incorporated herein, as an instrument of professional service, is not to be used in whole or part, for any other project without prior written authorization.

MARK	DATE	DESCRIPTION
A.	11/13/2025	DSA BACKCHECK

08/21/2025



HVAC SYSTEMS POWER PLAN - FIRST FLOOR

1/8" = 1'-0" | 1

KEYNOTES

1. PROVIDE GENERAL DUTY 600V, 3-POLE, 30A DISCONNECT. PROVIDE CONNECTION TO 480V, 3-PHASE, FAN COIL.
2. PROVIDE GENERAL DUTY 250V, 30A, 3-POLE FUSED DISCONNECT WITH 15A FUSES. PROVIDE CONNECTION TO 208V, SINGLE PHASE INDOOR UNIT 'IDU-1'.
3. PROVIDE ONE 3/4"C WITH 3#10 CU THWN AND 1#10 CU GND POWER CONNECTION FROM OUTDOOR UNIT 'ODU-2' ON ROOF.
4. PROVIDE GENERAL DUTY 250V, 30A, 3-POLE FUSED DISCONNECT WITH 15A FUSES. PROVIDE CONNECTION TO 208V, SINGLE PHASE INDOOR UNIT 'IDU-2A'.
5. PROVIDE ONE 3/4"C WITH 3#10 CU THWN AND 1#10 CU GND POWER CONNECTION FROM OUTDOOR UNIT 'ODU-2A' ON ROOF.
6. PROVIDE GENERAL DUTY 250V, 30A, 3-POLE FUSED DISCONNECT WITH 15A FUSES. PROVIDE CONNECTION TO 208V, SINGLE PHASE INDOOR UNIT 'IDU-2B'.
7. PROVIDE ONE 3/4"C WITH 2#10 CU THWN AND 1#10 CU GND POWER CONNECTION FROM OUTDOOR UNIT 'ODU-2B' ON ROOF.
8. PROVIDE GENERAL DUTY 250V, 30A, 3-POLE FUSED DISCONNECT WITH 15A FUSES. PROVIDE CONNECTION TO 208V, SINGLE PHASE INDOOR UNIT 'IDU-3'.
9. PROVIDE ONE 3/4"C WITH 3#10 CU THWN AND 1#10 CU GND POWER CONNECTION FROM OUTDOOR UNIT 'ODU-3' ON ROOF.
10. PROVIDE GENERAL DUTY 250V, 30A, 3-POLE FUSED DISCONNECT WITH 15A FUSES. PROVIDE CONNECTION TO 208V, SINGLE PHASE INDOOR UNIT 'IDU-4'.
11. PROVIDE ONE 3/4"C WITH 3#10 CU THWN AND 1#10 CU GND POWER CONNECTION FROM OUTDOOR UNIT 'ODU-4' ON ROOF.
12. FIRE ALARM ACTUATED CONTROL RELAY FOR FIRE/SMOKE DAMPER CONTROL PER DETAIL 19/E602.2.
13. RATED WALL ASSEMBLY, TYPICAL. REFER TO ARCHITECTURAL DRAWINGS FOR RATED ASSEMBLY RATINGS AND PROVIDE FIRE STOPPING FOR PENETRATIONS PER FIRE STOPPING DETAILS.
14. PROVIDE 120VAC POWER CONNECTION TO COMBINATION FIRE/SMOKE DAMPER THROUGH CONTROL RELAYS PER DETAIL 19/E602.2.
15. PROVIDE HEAVY DUTY 600V, 30A, 3-POLE FUSED DISCONNECT WITH 20A FUSES. PROVIDE CONNECTION TO 480V, 3-PHASE 7.5HP AIR HANDLER 'AH-1'.
16. PROVIDE 120VAC CONSTANT HOT POWER CONNECTION TO CONVENTIONAL DUCT SMOKE DETECTOR PROVIDE CONNECTION TO FIRE ALARM SYSTEM ADDRESSABLE MONITOR MODULE PER DETAIL 19/E602.2.
17. PROVIDE CONNECTION TO FIRE/SMOKE DAMPER REMOTE TEST POSITION INDICATOR.
18. PROVIDE 120V, 20A MOTOR RATED AC SNAP SWITCH. PROVIDE CONNECTION TO 120V SINGLE PHASE CONDENSATE LIFT PUMP.

GENERAL NOTES

A. PROVIDE ELECTRICAL FEEDERS PER SINGLE LINE DIAGRAM.

B. EXISTING CIRCUITING IS BASED ON AS BUILT RECORD DRAWINGS. CONTRACTOR SHALL FIELD VERIFY ALL EXISTING CONDITIONS.

C. CONDUIT AND CONDUCTORS FOR NEW OUTLETS SHALL BE CONCEALED, U.O.N.

D. PENETRATIONS THROUGH WALLS, CEILINGS, FLOORS, AND/OR ROOFS SHALL BE SEALED.

E. ALL 120V, 15A AND 20A RECEPTACLES WITHIN KITCHENS AND RESTROOMS SHALL BE GFCI TYPE RECEPTACLES. IN ALL OTHER SPACES, 120V, 15A AND 20A RECEPTACLES WITHIN 6' OF SINKS OR FAUCETS SHALL BE GFCI TYPE RECEPTACLES.

TETER, INC.
ARCHITECTS ENGINEERS CONNECTED
FRESNO HEADQUARTERS
VISALIA | BAKERSFIELD | MODESTO | SAN LUIS OBISPO

TETER

VISALIA CAMPUS UNIVERSITY CENTER
COLLEGE OF THE SEQUOIAS
915 S. MOONEY BLVD
VISALIA, CA

DRAWING TITLE
HVAC SYSTEMS POWER PLAN - FIRST FLOOR

PROJECT NO.
22-12498

DRAWING
E211.2

PLOT DATE: 9/4/2025 3:51:01 PM



NORTH

POWER PLAN - SECOND FLOOR

1/8" = 1'-0" | 1

KEYNOTES

1. PROVIDE 120V, 20A CONNECTION TO PRE-WIRED 120V, SINGLE PHASE KEWAUNEE FUME HOOD.
2. PROVIDE LEVITON GUAC2-W GFCI RECEPTACLE WITH ONE USB TYPE-A AND ONE USB TYPE-C PORTS IN ISLAND BENCH. (QUANTITY OF 6). PROVIDE CONNECTION TO EACH DEVICE VIA CHASE IN ISLAND BENCH. REFER TO ISLAND BENCH MANUFACTURER DRAWINGS.
3. PROVIDE LEVITON GUAC2-W GFCI RECEPTACLE WITH ONE USB TYPE-A AND ONE USB TYPE C PORTS AT EACH END OF ISLAND BENCH. (QUANTITY OF 2). PROVIDE CONNECTION TO EACH DEVICE VIA CHASE IN ISLAND BENCH. REFER TO ISLAND BENCH MANUFACTURER DRAWINGS.
4. PROVIDE 120V, 20A SINGLE PHASE RECEPTACLE FOR 120V, SINGLE PHASE, 10 FLA PURAIR LF FUME HOOD.
5. PROVIDE 120V 20A RECEPTACLE, MOUNTED FLUSH IN T-BAR CEILING, FOR PROJECTOR.
6. PROVIDE 120V SINGLE PHASE CONNECTION TO 120V SINGLE PHASE PROJECTOR.
7. A/V DISPLAY WALL POWER CONNECTION POINT. PROVIDE RECEPTACLES FOR A/V DISPLAY WALL AT LOCATIONS PER A/V DISPLAY SHOP DRAWINGS.
8. VARIABLE SPEED DRIVES PROVIDED BY MECHANICAL CONTRACTOR AND CONTROLLED THROUGH EMS SYSTEM.
9. TO EXHAUST FANS EF-1, EF-2 AND EF-3 ON ROOF.
10. 120V, 20A, DUPLEX GFCI TYPE RECEPTACLE MOUNTED WITHIN ELECTRIC DRINKING FOUNTAIN ENCLOSURE PER MANUFACTURER'S INSTALLATION INSTRUCTIONS.
11. E15: PROVIDE 20A, 250V, 2P, 3W, GROUNDING TYPE NEMA 6-20R RECEPTACLE.
12. 6.63kVA, 208V:220V, NEMA 1 ENCLOSED BUCK/BOOST STEP-UP TRANSFORMER. MOUNT ON WALL AT 8'-0" ABOVE FINISHED FLOOR ABOVE LOCKABLE EQUIPMENT DISCONNECT.
13. GENERAL DUTY, LOCKABLE, 60A, 250V, 4-POLE FUSIBLE MAINS DISCONNECT WITH TWO 40A FUSES FOR SPECTROMETER + TWO 16A FUSES WITH FUSE REDUCERS FOR ASSOCIATED PC CIRCUIT TO NEMA 6-20R RECEPTACLE. PROVIDE LIQUID-TIGHT FLEXIBLE CONNECTION TO 9kVA, 220V, ZETIUM XRF SPECTROMETER THROUGH 208V:220V STEP-UP TRANSFORMER.
14. ONE 1"C, 2#8 CU THHN, 1#8 CU GND.
15. PROVIDE 15A, 220V, 2P, 3W, GROUNDING TYPE NEMA 6-20R RECEPTACLE FOR ASSOCIATED PC. TAP SPECTROMETER SUPPLY CIRCUIT IN MAINS DISCONNECT ENCLOSURE AND RUN ASSOCIATED PC RECEPTACLE CIRCUIT THROUGH TWO 16A FUSES PER MANUFACTURER'S INSTALLATION INSTRUCTIONS. UTILIZE A COMMON EQUIPMENT GROUNDING CONDUCTOR FOR THE SPECTROMETER AND THE ASSOCIATED PC RECEPTACLE PER MANUFACTURER'S INSTALLATION INSTRUCTIONS.
16. 4.3kVA, 208V:230V, NEMA 1 ENCLOSED BUCK/BOOST STEP-UP TRANSFORMER PER MANUFACTURER'S REQUIREMENTS. MOUNT ON WALL AT 8'-0" ABOVE FINISHED FLOOR ABOVE NEMA 6-15R RECEPTACLE.
17. PROVIDE 2-GANG POWER FLOOR BOX RATED FOR CONCRETE SLAB INSTALLATION WITH TWO DUPLEX RECEPTACLES AND COMBINATION CARPET AND TILE FLANGE AND TWO RECEPTACLE COVERPLATES; LEGRAND OMNI SERIES CAST IRON FLOOR BOX MODEL: 880CS2-NA-827B-828R.
18. E14: PROVIDE 20A, 208V, 2P, 3W, GROUNDING TYPE NEMA 6-20R RECEPTACLE.
19. PROVIDE 1-GANG POWER FLOOR BOX RATED FOR CONCRETE SLAB INSTALLATION WITH ONE DUPLEX RECEPTACLE AND COMBINATION CARPET AND TILE FLANGE AND ONE RECEPTACLE COVERPLATE; LEGRAND OMNI SERIES CAST IRON FLOOR BOX MODEL: 880CS1-NA-817B-828R.
20. E20: PROVIDE 15A, 208V, 2P, 3W, GROUNDING TYPE NEMA 6-15R RECEPTACLE.
21. E17: PROVIDE 15A, 208V, 2P, 3W, GROUNDING TYPE NEMA 6-15R RECEPTACLE.
22. ONE 1"C, 8#12 CU THWN, 2#12 CU GND.
23. E06: PROVIDE 15A, 250V, 2P, 3W, GROUNDING TYPE NEMA 6-15R RECEPTACLE. ROUTE BRANCH CIRCUIT THROUGH 208V:230V STEP-UP TRANSFORMER PER MANUFACTURER'S INSTALLATION INSTRUCTIONS.
24. E05: PROVIDE 20A, 208V, 2P, 3W, GROUNDING TYPE NEMA 6-20R RECEPTACLE.
25. PROVIDE 1-GANG TELECOMMUNICATION FLOOR BOX RATED FOR CONCRETE SLAB INSTALLATION WITH ONE BRASS COMMUNICATION CAVERPLATE; LEGRAND OMNI SERIES CAST IRON FLOOR BOX MODEL: 880CS1-NA-828COMTC.
26. RATED WALL ASSEMBLY, TYPICAL. REFER TO ARCHITECTURAL DRAWINGS FOR RATED ASSEMBLY RATINGS AND PROVIDE FIRE STOPPING FOR PENETRATIONS PER FIRE STOPPING DETAILS.
27. ONE 1"C, 8#10 CU THHN, 2#10 CU GND.
28. PROVIDE RECEPTACLES MOUNTED ON RACK REFER TO DETAIL 8/E604.2.

GENERAL NOTES

A. PROVIDE ELECTRICAL FEEDERS PER SINGLE LINE DIAGRAM.

B. CONDUIT AND CONDUCTORS SHALL BE CONCEALED, U.O.N.

C. PENETRATIONS THROUGH WALLS, CEILINGS, FLOORS, AND/OR ROOFS SHALL BE SEALED.

D. ALL 120V, 15A AND 20A RECEPTACLES WITHIN KITCHENS, RESTROOMS INDOOR WET AREA, LOCKER ROOMS, GRAGES, SERVICE BAYS, ROOFTOP, AND OUTDOORS SHALL BE GFCI TYPE RECEPTACLES. IN ALL OTHER SPACES, 120V, 15A AND 20A RECEPTACLES WITHIN 6' OF SINKS OR FAUCETS SHALL BE GFCI TYPE RECEPTACLES.

E. PROVIDE FIRE STOPPING AT RATED WALL PENETRATIONS PER DRAWING E6D2.2, DETAILS 18, 28, AND 30.

F. PROVIDE FIRE STOPPING AT RATED FLOOR OR CEILING PENETRATIONS PER DRAWING E6D2.2, DETAIL 23.

G. REFER TO DRAWING E221.2 FOR ADDITIONAL POWER TO SECOND FLOOR HVAC SYSTEMS.

IDENTIFICATION STAMP
DIV. OF THE STATE ARCHITECT
APP: 02-122821 INC: 2
REVIEWED FOR
SS ☑ FLS ☑ ACS ☑
DATE: 11/20/2025

Teter, Inc. expressly reserves its common law copyright and other property rights in these plans. This document, the ideas and designs incorporated herein, as an instrument of professional service, is not to be used in whole or part, for any other project without prior written authorization.

MARK	DATE	DESCRIPTION
A.	11/13/2025	DSA BACKCHECK

08/21/2025

TETER, INC.
FRESNO HEADQUARTERS
VISALIA | BAKERSFIELD | MODESTO | SAN LUIS OBISPO
ARCHITECTS ENGINEERS CONNECTED

VISALIA CAMPUS UNIVERSITY CENTER
COLLEGE OF THE SEQUOIAS
915 S. MOONEY BLVD
VISALIA, CA

DRAWING TITLE: POWER PLAN - SECOND FLOOR

PROJECT NO. 22-12498

DRAWING E220.2

PLOT DATE: 9/4/2025 3:51:23 PM

\\tet-file1\Users\gene.vea_TETR\Documents\12498-E-UC_gene.vea.rvt

\\tet-file1\Users\gene.vea_TETER\Documents\12498-E-UC_gene.vea.rvt

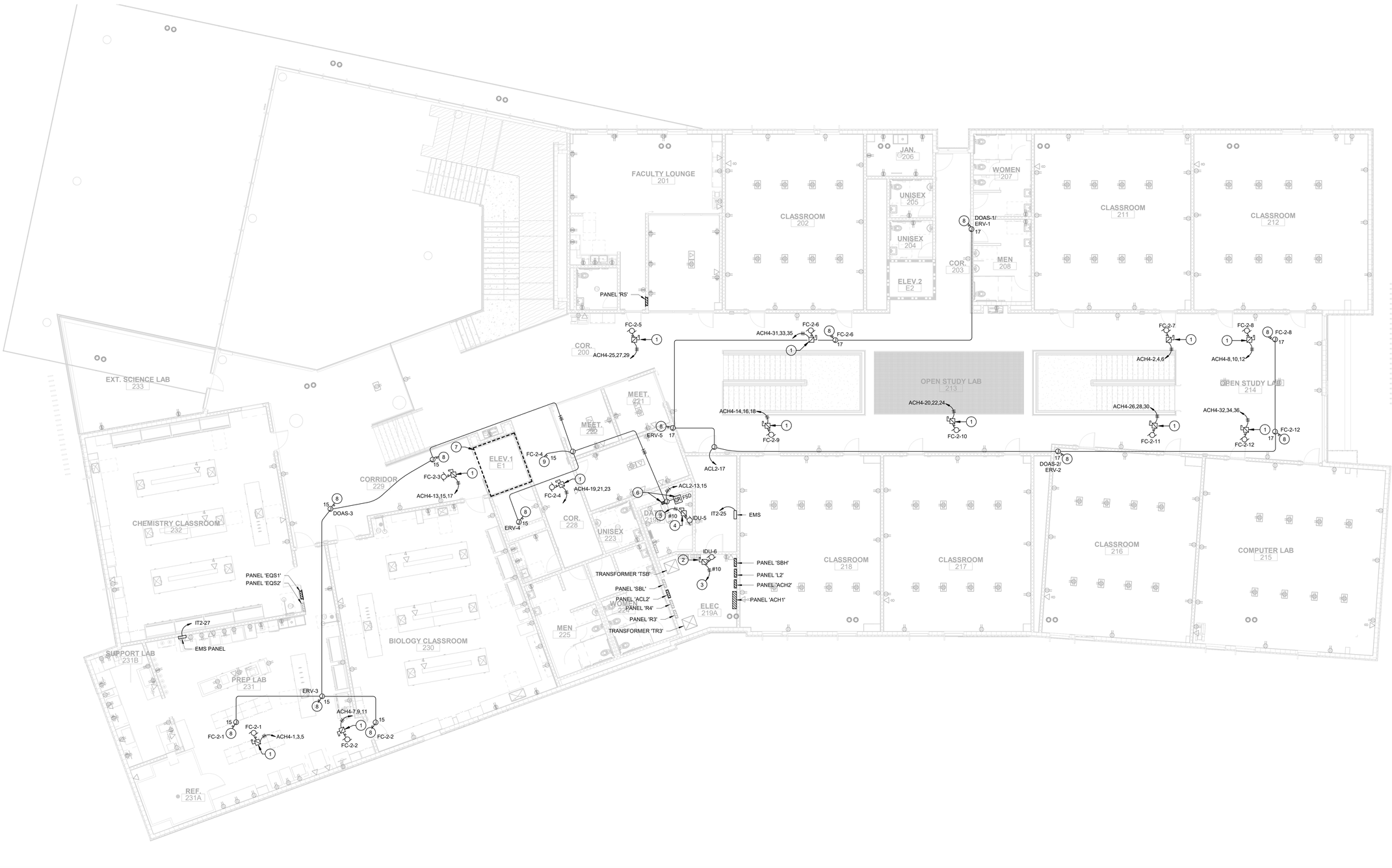

HVAC SYSTEMS POWER PLAN - SECOND FLOOR

1/8" = 1'-0" | 1

KEYNOTES

1. PROVIDE GENERAL DUTY 600V, 3-POLE, 30A FUSED DISCONNECT WITH 15A FUSES. PROVIDE CONNECTION TO 480V, 3-PHASE, FAN COIL.
2. PROVIDE HEAVY DUTY 250V, 30A, 3-POLE FUSED DISCONNECT WITH 15A FUSES. PROVIDE CONNECTION TO 208V, SINGLE PHASE INDOOR UNIT 'IDU-6'.
3. PROVIDE ONE 3/4"C WITH 3#10 CU THWN AND 1#10 CU GND POWER CONNECTION FROM OUTDOOR UNIT 'ODU-6' ON ROOF.
4. PROVIDE HEAVY DUTY 250V, 30A, 3-POLE FUSED DISCONNECT WITH 15A FUSES. PROVIDE CONNECTION TO 208V, SINGLE PHASE INDOOR UNIT 'IDU-5'.
5. PROVIDE ONE 3/4"C WITH 3#10 CU THWN AND 1#10 CU GND POWER CONNECTION FROM OUTDOOR UNIT 'ODU-5' ON ROOF.
6. FIRE ALARM ACTUATED CONTROL RELAY FOR FIRE/SMOKE DAMPER CONTROL PER DETAIL 19/E602.2.
7. RATED WALL ASSEMBLY, TYPICAL. REFER TO ARCHITECTURAL DRAWINGS FOR RATED ASSEMBLY RATINGS AND PROVIDE FIRE STOPPING FOR PENETRATIONS PER FIRE STOPPING DETAILS.
8. PROVIDE 120VAC CONSTANT HOT POWER CONNECTION TO CONVENTIONAL DUCT SMOKE DETECTOR PROVIDE CONNECTION TO FIRE ALARM SYSTEM ADDRESSABLE MONITOR MODULE PER DETAIL 20/E602.2.

GENERAL NOTES

A. PROVIDE ELECTRICAL FEEDERS PER SINGLE LINE DIAGRAM.

B. CONDUIT AND CONDUCTORS FOR NEW OUTLETS SHALL BE CONCEALED, U.O.N.

C. PENETRATIONS THROUGH WALLS, CEILINGS, FLOORS, AND/OR ROOFS SHALL BE SEALED.

D. PROVIDE FIRE STOPPING AT RATED WALL PENETRATIONS PER DRAWING E602.2, DETAILS 18, 28, AND 30.

E. PROVIDE FIRE STOPPING AT RATED FLOOR OR CEILING PENETRATIONS PER DRAWING E602.2, DETAIL 23.

PLOT DATE: 9/4/2025 3:51:41 PM

IDENTIFICATION STAMP
DIV. OF THE STATE ARCHITECT
APP: 02-122821 INC: 2
REVIEWED FOR
SS ☑ FLS ☑ ACS ☑
DATE: 11/20/2025

Teter, Inc. expressly reserves its statutory law copyright and other property rights in these plans. This document, the ideas and designs incorporated herein, as an instrument of professional service, is not to be used in whole or part, for any other work, without prior written authorization.

MARK	DATE	DESCRIPTION
A.	11/13/2025	DSA BACKCHECK

08/21/2025

TETER, INC.
FRESNO HEADQUARTERS
VISALIA | BAKERSFIELD | MODESTO | SAN LUIS OBISPO
ARCHITECTS ENGINEERS CONNECTED

VISALIA CAMPUS UNIVERSITY CENTER
COLLEGE OF THE SEQUOIAS
915 S. MOONEY BLVD
VISALIA, CA

DRAWING TITLE
HVAC SYSTEMS POWER PLAN - SECOND FLOOR

PROJECT NO.
22-12498

DRAWING
E221.2

\\tet-file1\Users\gene.vea_TETER\Documents\12498-E-UC_gene.vea.rvt

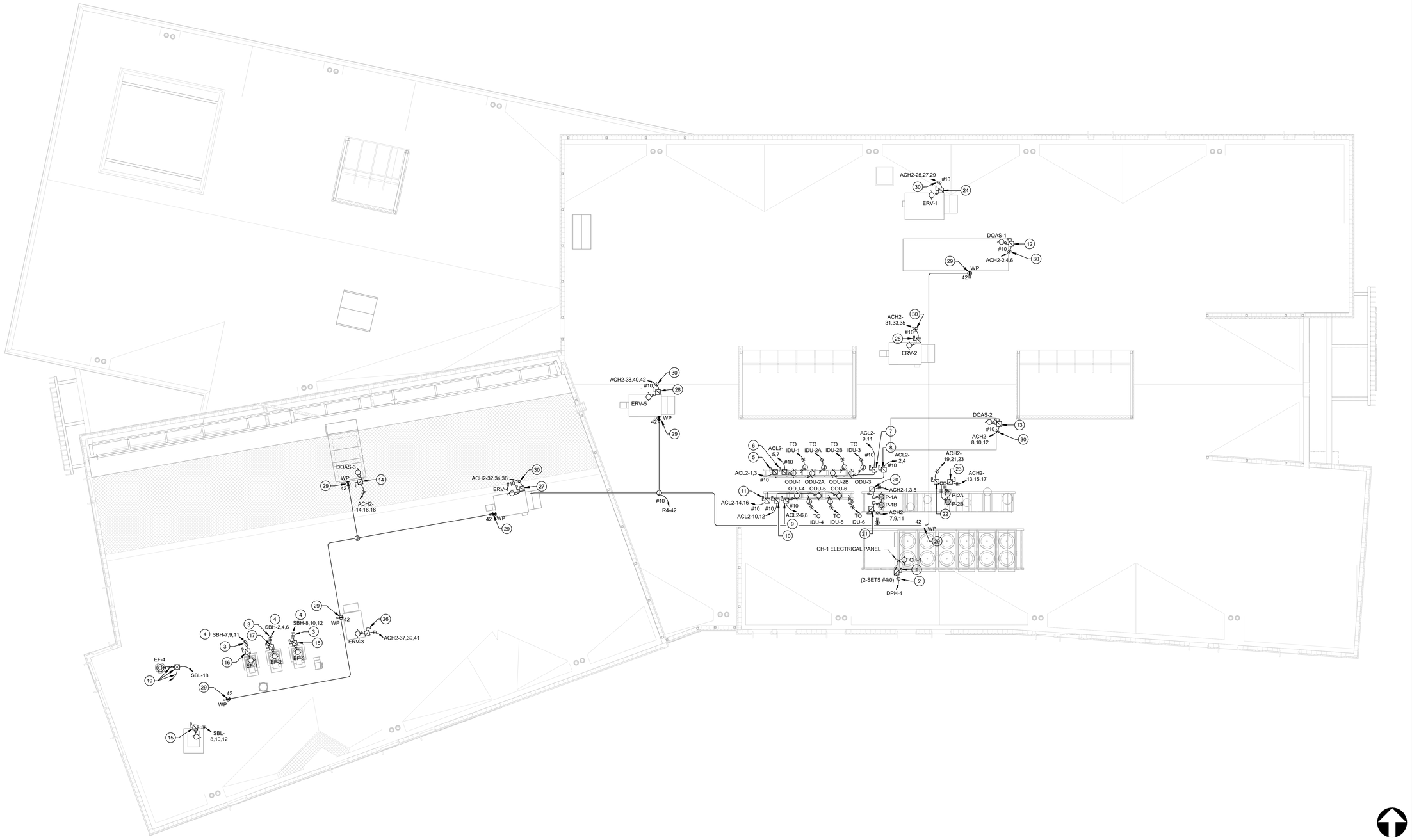

NORTH

POWER PLAN - ROOF

1/8" = 1'-0" | 1

KEYNOTES

1. PROVIDE HEAVY DUTY WEATHERPROOF NEMA 3R 600V, 400A, 3-POLE FUSED DISCONNECT WITH 225A FUSES. PROVIDE CONNECTION TO 460V, 3-PHASE, MCA 423, MOCP 450, FLA 414.9 HEAT PUMP CHILLER 'CH-1'.
2. PROVIDE TWO 2-1/2"C WITH 3#4/0 CU THWN AND 1#2 CU GND, IN EACH CONDUIT.
3. ONE 3/4"C, 3#12 CU THWN, 1#12 CU GND + 2#12 CU THWN (AUX. CONTACT LOCAL DISCONECT OPEN SIGNAL TO VFD).
4. ROUTE CIRCUIT THROUGH VARIABLE SPEED DRIVE IN SECOND FLOOR ELECTRICAL ROOM 232.
5. PROVIDE HEAVY DUTY WEATHERPROOF NEMA 3R 250V, 30A, 3-POLE FUSIBLE DISCONNECT WITH 30A FUSES. PROVIDE CONNECTION TO 208V, SINGLE PHASE, 25 MCA, 30 MOCP, OUTDOOR UNIT 'CU-1'.
6. PROVIDE HEAVY DUTY WEATHERPROOF NEMA 3R 250V, 30A, 3-POLE FUSIBLE DISCONNECT WITH 30A FUSES. PROVIDE CONNECTION TO 208V, SINGLE PHASE, 25 MCA, 30 MOCP, OUTDOOR UNIT 'CU-2A'.
7. PROVIDE HEAVY DUTY WEATHERPROOF NEMA 3R 250V, 30A, 3-POLE FUSIBLE DISCONNECT WITH 30A FUSES. PROVIDE CONNECTION TO 208V, SINGLE PHASE, 25 MCA, 30 MOCP, OUTDOOR UNIT 'CU-2B'.
8. PROVIDE HEAVY DUTY WEATHERPROOF NEMA 3R 250V, 30A, 3-POLE FUSIBLE DISCONNECT WITH 25A FUSES. PROVIDE CONNECTION TO 208V, SINGLE PHASE, MCA 11, MOCP 25, OUTDOOR UNIT 'CU-3'.
9. PROVIDE HEAVY DUTY WEATHERPROOF NEMA 3R 250V, 30A, 3-POLE FUSED DISCONNECT WITH 30A FUSES. PROVIDE CONNECTION TO 208V, SINGLE PHASE, 25 MCA, 30 MOCP, OUTDOOR UNIT 'ODU-4'.
10. PROVIDE HEAVY DUTY WEATHERPROOF NEMA 3R 250V, 30A, 3-POLE FUSED DISCONNECT WITH 30A FUSES. PROVIDE CONNECTION TO 208V, SINGLE PHASE, 25 MCA, 30 MOCP, OUTDOOR UNIT 'ODU-5'.
11. PROVIDE HEAVY DUTY WEATHERPROOF NEMA 3R 250V, 30A, 3-POLE FUSED DISCONNECT WITH 30A FUSES. PROVIDE CONNECTION TO 208V, SINGLE PHASE, 11 MCA, 30 MOCP, OUTDOOR UNIT 'ODU-6'.
12. PROVIDE HEAVY DUTY WEATHERPROOF NEMA 3R 600V, 30A, 3-POLE FUSED DISCONNECT WITH 25A FUSES. PROVIDE CONNECTION TO 480V, 3-PHASE, 20 MCA, 25 MOCP DIRECT OUTSIDE AIR SUPPLY UNIT 'DOAS-1'.
13. PROVIDE HEAVY DUTY WEATHERPROOF NEMA 3R 600V, 30A, 3-POLE FUSED DISCONNECT WITH 25A FUSES. PROVIDE CONNECTION TO 480V, 3-PHASE, 20 MCA, 25 MOCP DIRECT OUTSIDE AIR SUPPLY UNIT 'DOAS-2'.
14. PROVIDE HEAVY DUTY WEATHERPROOF NEMA 3R 600V, 30A, 3-POLE FUSED DISCONNECT WITH 25A FUSES. PROVIDE CONNECTION TO 480V, 3-PHASE, 13.75 MCA, 20 MOCP DIRECT OUTSIDE AIR SUPPLY UNIT 'DOAS-3'.
15. PROVIDE HEAVY DUTY WEATHERPROOF NEMA 3R 600V, 30A, 3-POLE FUSIBLE DISCONNECT WITH 15A FUSES. PROVIDE CONNECTION TO 480V, 3-PHASE, 15 MOCP REFRIGERATION UNIT.
16. PROVIDE HEAVY DUTY WEATHERPROOF NEMA 3R 600V, 30A, 3-POLE FUSED DISCONNECT WITH AUXILIARY CONTACT AND 15A FUSES. PROVIDE CONNECTION TO 480V, 3-PHASE, 4.06 HP EXHAUST FAN 'EF-1'.
17. PROVIDE HEAVY DUTY WEATHERPROOF NEMA 3R 600V, 30A, 3-POLE FUSED DISCONNECT WITH WITH AUXILIARY CONTACT AND 15A FUSES. PROVIDE CONNECTION TO 480V, 3-PHASE, 4.06 HP EXHAUST FAN 'EF-2'.
18. PROVIDE HEAVY DUTY WEATHERPROOF NEMA 3R 600V, 30A, 3-POLE FUSED DISCONNECT WITH WITH AUXILIARY CONTACT AND 15A FUSES. PROVIDE CONNECTION TO 480V, 3-PHASE, 1.55 HP EXHAUST FAN 'EF-3'.
19. WEATHERPROOF MOTOR RATED A/C SNAP SWITCH DISCONNECT. PROVIDE CONNECTION FOR 115V, 1ϕ, 1/4HP, EXHAUST FAN 'EF-4'. PROVIDE 20A, 120V RELAY WITH CONDUIT AND CONDUCTORS TO EXHAUST FAN CONTROL, REFER TO MECHANICAL.
20. PROVIDE HEAVY DUTY WEATHERPROOF NEMA 3R 600V, 30A, 3-POLE FUSIBLE DISCONNECT WITH 20A FUSES. PROVIDE CONNECTION TO 480V, 3-PHASE, 7.5HP CHW PUMP P-1A THROUGH VFD.
21. PROVIDE HEAVY DUTY WEATHERPROOF NEMA 3R 600V, 30A, 3-POLE FUSIBLE DISCONNECT WITH 20A FUSES. PROVIDE CONNECTION TO 480V, 3-PHASE, 7.5HP CHW PUMP P-1B THROUGH VFD.
22. PROVIDE HEAVY DUTY WEATHERPROOF NEMA 3R 600V, 30A, 3-POLE FUSIBLE DISCONNECT WITH 20A FUSES. PROVIDE CONNECTION TO 480V, 3-PHASE, 5HP HW PUMP P-2A THROUGH VFD.
23. PROVIDE HEAVY DUTY WEATHERPROOF NEMA 3R 600V, 30A, 3-POLE FUSIBLE DISCONNECT WITH 20A FUSES. PROVIDE CONNECTION TO 480V, 3-PHASE, 5HP HW PUMP P-2B THROUGH VFD.
24. PROVIDE HEAVY DUTY WEATHERPROOF NEMA 3R 600V, 60A, 3-POLE FUSIBLE DISCONNECT WITH 30A FUSES. PROVIDE CONNECTION TO 480V, 3-PHASE, 21.5 MCA , 30 MOCP, HEAT RECOVERY UNIT 'ERV-1'.
25. PROVIDE HEAVY DUTY WEATHERPROOF NEMA 3R 600V, 60A, 3-POLE FUSED DISCONNECT WITH 40A FUSES. PROVIDE CONNECTION TO 480V, 3-PHASE, 21.5 MCA , 30 MOCP, HEAT RECOVERY UNIT 'ERV-2'.
26. PROVIDE HEAVY DUTY WEATHERPROOF NEMA 3R 600V, 30A, 3-POLE FUSED DISCONNECT WITH 15A FUSES. PROVIDE CONNECTION TO 480V, 3-PHASE, 13.6 MCA , 15 MOCP, HEAT RECOVERY UNIT 'ERV-3'.
27. PROVIDE HEAVY DUTY WEATHERPROOF NEMA 3R 600V, 30A, 3-POLE FUSED DISCONNECT WITH 30A FUSES. PROVIDE CONNECTION TO 480V, 3-PHASE, 21.5 MCA , 30 MOCP, HEAT RECOVERY UNIT 'ERV-4'.
28. PROVIDE HEAVY DUTY WEATHERPROOF NEMA 3R 600V, 30A, 3-POLE FUSED DISCONNECT WITH 25A FUSES. PROVIDE CONNECTION TO 480V, 3-PHASE, 18 MCA , 25 MOCP, HEAT RECOVERY UNIT 'ERV-5'.
29. WEATHER-RESISTANT GFCI RECEPTACLE LOCATED ON ROOF WITH WEATHERPROOF COVER.
30. ONE 1"C, 3#10 CU THWN, 1#10 CU GND.

GENERAL NOTES

A. CONDUIT AND CONDUCTORS FOR ROOFTOP EQUIPMENT SHALL BE ROUTED NO LESS THAN 2-INCHES BELOW THE UNDERSIDE OF THE ROOF DECK HORIZONTALLY BEFORE TURNING UP AT THE LOCATION OF THE EQUIPMENT.

B. PENETRATIONS THROUGH THE ROOF SHALL BE SEALED AND MADE WEATHERPROOF.

C. ALL 120V, 15A AND 20A RECEPTACLES WITHIN KITCHENS, RESTROOMS INDOOR WET AREA, LOCKER ROOMS, GRAGES, SERVICE BAYS, ROOFTOP, AND OUTDOORS SHALL BE GFCI TYPE RECEPTACLES. IN ALL OTHER SPACES, 120V, 15A AND 20A RECEPTACLES WITHIN 6' OF SINKS OR FAUCETS SHALL BE GFCI TYPE RECEPTACLES.

IDENTIFICATION STAMP
DIV. OF THE STATE ARCHITECT
APP: 02-122821 INC: 2
REVIEWED FOR
SS ☑ FLS ☑ ACS ☑
DATE: 11/20/2025

Teter, Inc. expressly reserves its common law copyright and other property rights in these plans. This document, the ideas and designs incorporated herein, as an instrument of professional service, is not to be used in whole or part, for any other project without prior written authorization.

MARK	DATE	DESCRIPTION
A.	11/13/2025	DSA BACKCHECK

REGISTERED PROFESSIONAL ENGINEER BRIAN A. VEA No. E 17773 ELECTRICAL STATE OF CALIFORNIA

08/21/2025

TETER, INC.
FRESNO HEADQUARTERS
VISALIA | BAKERSFIELD | MODESTO | SAN LUIS OBISPO
ARCHITECTS ENGINEERS CONNECTED

VISALIA CAMPUS UNIVERSITY CENTER
COLLEGE OF THE SEQUOIAS
915 S. MOONEY BLVD
VISALIA, CA

DRAWING TITLE
POWER PLAN - ROOF

PROJECT NO.
22-12498

DRAWING
E230.2

PLOT DATE: 9/4/2025 3:52:04 PM

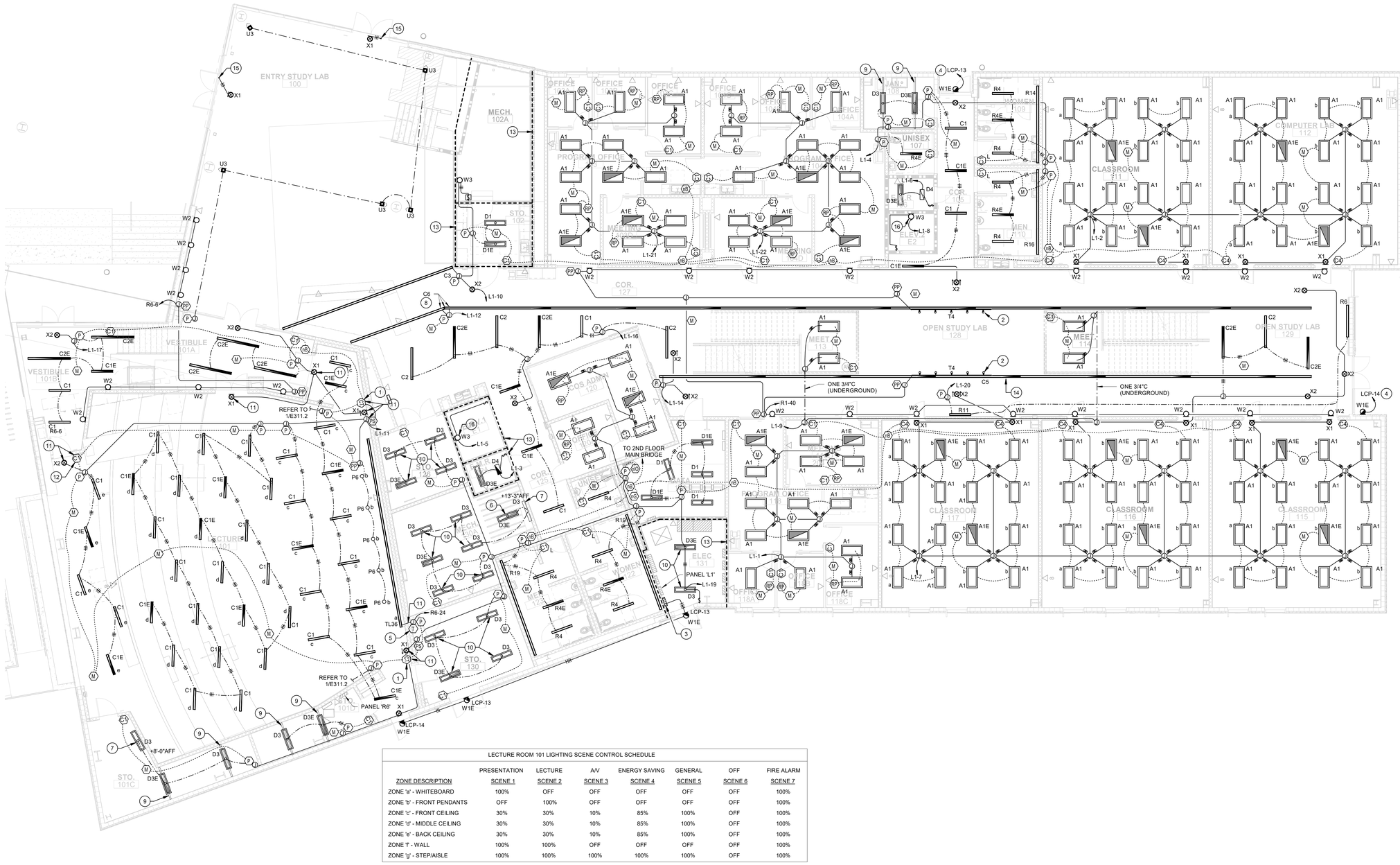

LECTURE ROOM 101 LIGHTING SCENE CONTROL SCHEDULE

ZONE DESCRIPTION	PRESENTATION SCENE 1	LECTURE SCENE 2	A/V SCENE 3	ENERGY SAVING SCENE 4	GENERAL SCENE 5	OFF SCENE 6	FIRE ALARM SCENE 7
ZONE 'a' - WHITEBOARD	100%	OFF	OFF	OFF	OFF	OFF	100%
ZONE 'b' - FRONT PENDANTS	OFF	100%	OFF	OFF	OFF	OFF	100%
ZONE 'c' - FRONT CEILING	30%	30%	10%	85%	100%	OFF	100%
ZONE 'd' - MIDDLE CEILING	30%	30%	10%	85%	100%	OFF	100%
ZONE 'e' - BACK CEILING	30%	30%	10%	85%	100%	OFF	100%
ZONE 'f' - WALL	100%	100%	OFF	OFF	OFF	OFF	100%
ZONE 'g' - STEP/AISLE	100%	100%	100%	100%	100%	OFF	100%

NORTH

LIGHTING PLAN - FIRST FLOOR

1/8" = 1'-0" | 1

KEYNOTES

1. PROVIDE NLIGHT nTS 7" TOUCHSCREEN PROGRAMMED PER LECTURE ROOM 101 SCENE CONTROL SCHEDULE.
2. PROVIDE TRACK LIGHT SYSTEM WITH 15' LUMENTURE JT-1 TRACK WITH FIVE LUMENTURE T65 TRACK LIGHT FIXTURE (MODEL T65-400H-1500-60-J). WALL MOUNT TRACK LIGHT SYTEM TO WALL AT 13'-6" AFF
3. PROVIDE NEMA 1 LIGHTING CONTACTOR ENCLOSURE WITH 30A, 277V, CONTACTORS FOR EXTERIOR LIGHTING CONTROL THROUGH BUILDING ENERGY MANAGEMENT SYSTEM.
4. ROUTE LIGHT BRANCH CIRCUIT THROUGH CONTROL PANEL 'LCP'.
5. 96W, 120VAC:24VDC, CLASS 2, KELVIX MINI ULV96 LED TAPE LIGHT POWER SUPPLY.
6. SURFACE MOUNT LIGHT FIXTURE TO UNDERSIDE OF MECHANICAL PLATFORM.
7. WALL MOUNT LIGHTING FIXTURE PER DETAIL 4/E603.2, AT SPECIFIED HEIGHT.
8. FIXTURE TYPE 'C6' SHALL CONSIST OF TWO STRAIGHT SEGMENTS AND A CUSTOM ANGLE. COORDINATE WITH CEILING FRAMER AND FIXTURE 'C6' SHOP DRAWING PROVIDED BY MANUFACTURER TO ENSURE PROPER FIT AND FINISH.
9. PROVIDE STRUT SUPPORT AND MOUNT LIGHTING FIXTURE AT 11'-0" AFF, PER DETAIL 8/E603.2
10. SUSPEND LIGHTING FIXTURE TO 11'-0"AFF WITH AIRCRAFT CABLE AND PROVIDE BRACING PER DETAIL.
11. PROVIDE ACOUSTIC SEALANT AND WRAP OUTLET BOXES WITH ACOUSTIC PUTTY PADS AT ALL CONDUIT AND OUTLET BOX PENETRATIONS IN LECTURE HALL WALLS, REFER TO ARCHITECTURAL REQUIREMENTS FOR ACOUSTIC TREATMENT.
12. PROGRAM SINGLE ZONE NLIGHT SWITCH FOR "ON ONLY" FUNCTION TO RETURN LECTURE ROOM 101 TO ITS PREVIOUS SCENE.
13. RATED WALL ASSEMBLY, TYPICAL, REFER TO ARCHITECTURAL DRAWINGS FOR RATED ASSEMBLY RATINGS AND PROVIDE FIRE STOPPING FOR PENETRATIONS PER FIRE STOPPING DETAILS.
14. FIXTURE TYPE 'C5' SHALL CONSIST OF ONE STRAIGHT SEGMENT. COORDINATE WITH CEILING FRAMER AND FIXTURE 'C5' SHOP DRAWING PROVIDED BY MANUFACTURER TO ENSURE PROPER FIT AND FINISH.
15. PROVIDE POWER CONNECTION TO EXIT LIGHT FIXTURE THROUGH MULLION FROM LIGHT FIXTURE ABOVE CEILING (SEE 1/E320.2).
16. PROVIDE WALL MOUNT ELEVATOR PIT LIGHT FIXTURE AT +24" ABOVE ELEVATOR PIT FLOOR.

CIRCULATION AREA CONTROL

A. DURING NORMAL BUSINESS HOURS (8AM TO 8PM), MONDAY-FRIDAY, PROGRAM LIGHTING IN CONTIGUOUS CORE CIRCULATION AREA AS FOLLOWS: CORRIDOR SPACES 105, 125, 127, OPEN STUDY SPACES 128 & 129 AND ENTRY STUDY LAB AREA 100, SHALL BE SCHEDULED TO BE ON WITH MANUAL OVER-RIDE AND DIMMING CONTROL LOCATED IN THE ELECTRICAL ROOM.

B. DURING WEEKENDS, HOLIDAYS AND OUTSIDE OF NORMAL BUSINESS HOURS, PROGRAM LIGHTING IN CONTIGUOUS CORE CIRCULATION AREA AS FOLLOWS: OCCUPANCY SENSORS IN CORRIDOR SPACES 105, 125, 127, OPEN STUDY SPACES 128 & 129 AND ENTRY STUDY LAB AREA 100, SHALL BE GLOBALLY PROGRAMMED TO KEEP CORE CIRCULATION AREA LIGHTING ON WHILE THE BUILDING IS OCCUPIED.

PRIMARY SIDELIT ZONE:

LIGHTING WIRING LEGEND

LIGHTING BRANCH CIRCUIT IN EMT CONDUIT CONSISTING OF THE FOLLOWING BRANCH CIRCUIT CONDUCTORS:
1. HOT - 1#12 CU THHN (BROWN, ORANGE OR YELLOW)
2. NEUTRAL - 1#12 CU THHN (WHITE WITH COLORED STRIPE)
3. EQUIPMENT GROUNDING - 1#12 CU THHN (GREEN)

CLASS 2 CATEGORY 5E PLENUM RATED CABLE GREEN IN COLOR WITH RJ45 CONNECTORS ON EACH END:

TYPE MC-PCS MC LUMINARY CABLE CONSISTING OF THE FOLLOWING CIRCUIT CONDUCTORS:
1. CONTROLLED HOT - 1#12 CU THHN (BROWN)
2. UNSWITCHED HOT - 1#12 CU THHN (ORANGE)
3. NEUTRAL - 1#12 CU THHN (GREY)
4. EQUIPMENT GROUNDING - 1#12 CU THHN (GREEN)
5. 0-10VDC CONTROL: PVC JACKET CONTAINING 2#16 CU TFN (PURPLE & GRAY)

TYPE MC-PCS MC LUMINARY CABLE CONSISTING OF THE FOLLOWING CIRCUIT CONDUCTORS:
1. CONTROLLED HOT - 1#12 CU THHN (BROWN)
2. NEUTRAL - 1#12 CU THHN (GREY)
3. EQUIPMENT GROUNDING - 1#12 CU THHN (GREEN)
4. 0-10VDC CONTROL: PVC JACKET CONTAINING 2#16 CU TFN (PURPLE & GRAY)

LIGHTING SYMBOL LEGEND

- (M) NETWORK CEILING MOUNTED OCCUPANCY SENSOR
- (C1) SINGLE-ZONE NETWORK DIMMING MANUAL CONTROL STATION AT +48" TO TOP OF OUTLET BOX
- (C4) FOUR-SCENE NETWORK DIMMING MANUAL CONTROL STATION AT +48" TO TOP OF OUTLET BOX
- (NS) NETWORK DAYLIGHTING SENSOR WITHIN DAYLIT ZONE
- (P) NETWORK DIMMING CONTROL RELAY
- (PP) NETWORK PHASE DIMMING CONTROL RELAY
- (RP) NETWORK PLUG LOAD CONTROLLER RELAY
- (XG) NLIGHT ECLIPSE NETWORK GATEWAY WITH INTEGRAL AUTOMATED DEMAND RESPONSE OPENADR VIRTUAL END NODE
- (XB) NETWORK BRIDGE
- (XT) NETWORK 7" TOUCHSCREEN WALL SWITCH DIMMER CONTROL WITH INDIVIDUAL ZONE CONTROL AND 6 SCENE CONTROL AT +48" TO TOP OF OUTLET BOX.
- (PS) NLIGHT FCS PS10 POWER SUPPLY
- WALL SWITCH WITH INTEGRAL OCCUPANCY SENSOR AT +48" TO TOP OF OUTLET BOX
- (WD) NLIGHT DRY CONTACT INTERFACE DEVICE

GENERAL NOTES

A. CIRCUITS SUPPLYING EMERGENCY LIGHTING FIXTURES SHALL BE SUPPLIED BY A CONTROLLED HOT CONDUCTOR AND A CONSTANT HOT CONDUCTOR OF THE SAME BRANCH CIRCUIT.

B. EXIT SIGNAGE AND WALL MOUNTED EMERGENCY LIGHTING UNITS SHALL BE SUPPLIED BY AN UNSWITCHED HOT CONDUCTOR.

C. REFER TO ARCHITECTURAL SHEETS FOR ELEVATIONS OF WALL MOUNTED LIGHTING FIXTURES.

D. NETWORK DAYLIGHT SENSORS FOR AUTOMATIC DIMMING WITHIN A DAYLIT ZONE SHALL BE CALIBRATED SUCH THAT LIGHTING POWER FOR THE LIGHTING FIXTURES WITHIN THAT DAYLIT ZONE SHALL BE REDUCED BY 65% WHEN DAYLIT ILLUMINANCE IS 150% OF ILLUMINANCE RECEIVED FROM THE GENERAL LIGHTING SYSTEM AT FULL POWER.

E. LIGHTING CONTROLS SHALL BE DEMAND RESPONSIVE AND SHALL AUTOMATICALLY REDUCE BUILDING LIGHTING POWER DEMAND BY 15% IN RESPONSE TO A DEMAND RESPONSE SIGNAL PER 2022 CA ENERGY CODE SECTION 130.1 (e).

F. SEE DETAIL 7/E605.2 FOR DEMAND RESPONSE NETWORK LIGHTING CONTROLS DIAGRAM.

G. SEE DETAIL 1/E605.2 FOR nLIGHT ENABLED FIXTURE LIGHTING DIMMING CONTROLS DIAGRAM.

H. SEE DETAIL 2/E605.2 FOR nLIGHT DIMMER PACK LIGHTING DIMMING CONTROLS DIAGRAM.

I. PROVIDE FIRE STOPPING AT RATED WALL PENETRATIONS PER DRAWING E602.2, DETAILS 28 AND 30.

IDENTIFICATION STAMP
DIV. OF THE STATE ARCHITECT
APP: 02-122821 INC: 2
REVIEWED FOR
SS ☑ FLS ☑ ACS ☑
DATE: 11/20/2025

Teter, Inc. expressly reserves its common law copyright and other property rights in these plans. This document, the ideas and designs incorporated herein, as an instrument of professional service, is not to be used in whole or in part, for any other project without prior written authorization.

MARK	DATE	DESCRIPTION
A.	11/13/2025	DSA BACKCHECK

08/21/2025

TETER, INC.
FRESNO HEADQUARTERS
VISALIA | BAKERSFIELD | MODESTO | SAN LUIS OBISPO
ARCHITECTS ENGINEERS CONNECTED

VISALIA CAMPUS UNIVERSITY CENTER
COLLEGE OF THE SEQUOIAS
915 S. MOONEY BLVD
VISALIA, CA

PROJECT NO. 22-12498

DRAWING TITLE: LIGHTING PLAN - FIRST FLOOR

DRAWING E310.2

PLOT DATE: 9/16/2025 12:48:59 PM

\\tet-file1\Users\gene.vea_TETER\Documents\12498-E-UC_gene.vea.rvt

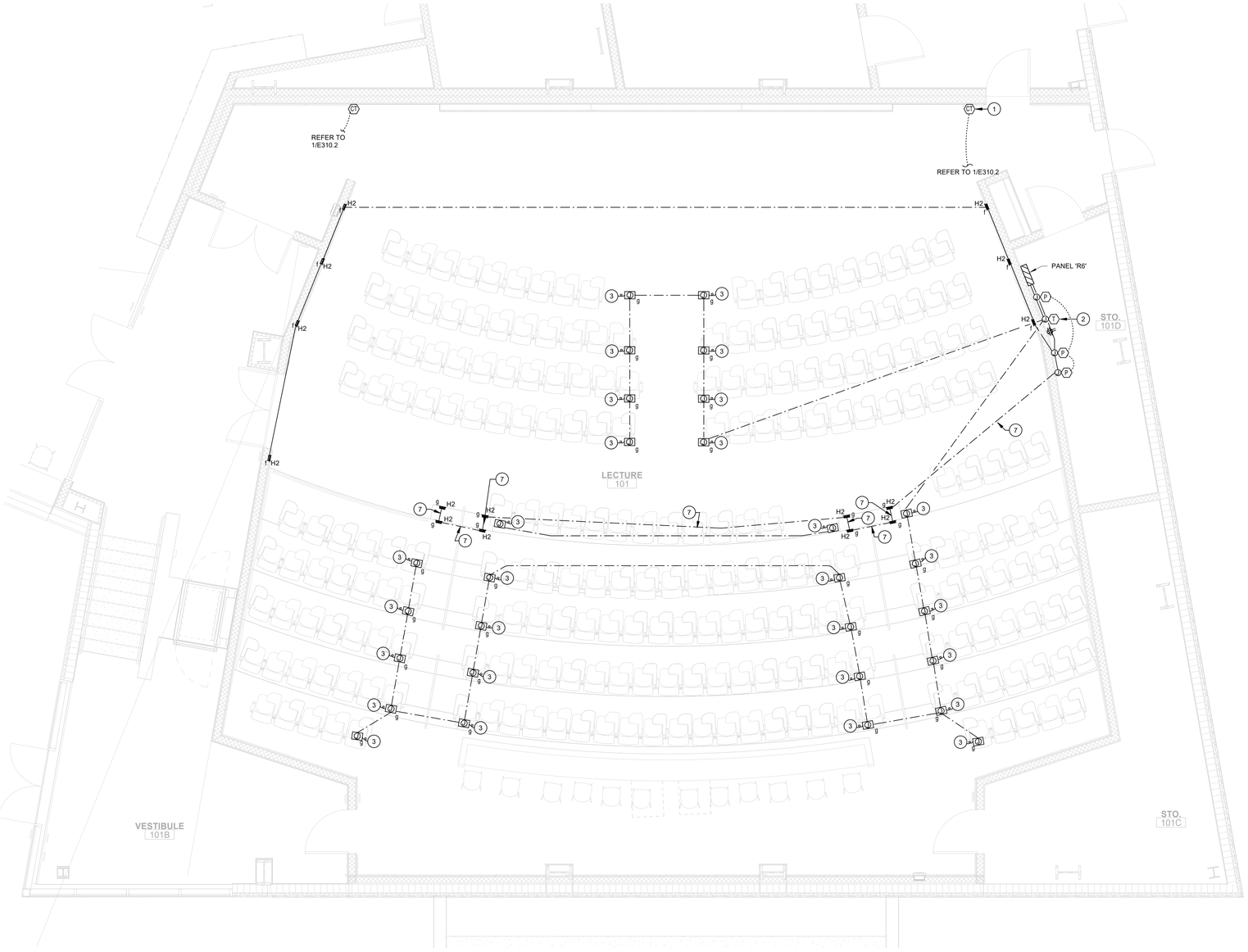

ENLARGED LIGHTING PLAN - LECTURE ROOM INGRADE, AISLE, AND STEP LIGHT FIXTURES

1/4" = 1'-0" | 1

KEYNOTES

1. PROVIDE NLIGHT nTS 7" TOUCHSCREEN PROGRAMMED PER LECTURE ROOM 101 SCENE CONTROL SCHEDULE (SEE E310.2).
2. 60W, 120VAC:12VDC, LED AISLE LIGHTING POWER SUPPLY, TIVOLI MODEL INF-J-60-1-5-12, OR EQUIVALENT
3. PROVIDE CONNECTION TO AISLE ARMREST 12VDC LIGHTING.
4. PROVIDE 1-1/2"C PVC WITH LUMENPULSE JUMPER CABLE (LOIJC-UL-10FT) AND PROVIDE CONNECTION BETWEEN LUMENPULSE INGRADE LIGHT FIXTUES. INSTALL PER MANUFACTURERS INSTRUCTIONS.
5. PROVIDE 1-1/2"C PVC WITH LUMENPULSE LEADER CABLE (LOILC-UL-50FT) AND PROVIDE CONNECTION TO LUMEMPULSE LIGHT FIXTUE. INSTALL PER MANUFACTURERS INSTRUCTIONS.
6. PROVIDE LUMENPULSE LOI-JBOX AND PROVIDE CONNECTION TO LUMEMPULSE LEADER CABLE.
7. PROVIDE 3/4"C PVC WITH 2#12 CU THWN AND 1#12 CU GND. PROVIDE CONNECITON TO LIGHT FIXTURE.

LIGHTING WIRING LEGEND

..... CLASS 2 CATEGORY 5E PLENUM RATED CABLE GREEN IN COLOR WITH RJ45 CONNECTORS ON EACH END:

LIGHTING SYMBOL LEGEND

(P) NETWORK DIMMING CONTROL RELAY

(CT) FRESCO TOUCH SCREEN LIGHTING CONTROL WITH DMX/RDM CONTROL.

GENERAL NOTES

A. CIRCUITS SUPPLYING EMERGENCY LIGHTING FIXTURES SHALL BE SUPPLIED BY A CONTROLLED HOT CONDUCTOR AND A CONSTANT HOT CONDUCTOR OF THE SAME BRANCH CIRCUIT.

B. EXIT SIGNAGE AND WALL MOUNTED EMERGENCY LIGHTING UNITS SHALL BE SUPPLIED BY AN UNSWITCHED HOT CONDUCTOR.

C. REFER TO ARCHITECTURAL SHEETS FOR ELEVATIONS OF WALL MOUNTED LIGHTING FIXTURES.

D. NETWORK DAYLIGHT SENSORS FOR AUTOMATIC DIMMING WITHIN A DAYLIT ZONE SHALL BE CALIBRATED SUCH THAT LIGHTING POWER FOR THE LIGHTING FIXTURES WITHIN THAT DAYLIT ZONE SHALL BE REDUCED BY 65% WHEN DAYLIT ILLUMINANCE IS 150% OF ILLUMINANCE RECEIVED FROM THE GENERAL LIGHTING SYSTEM AT FULL POWER.

E. LIGHTING CONTROLS SHALL BE DEMAND RESPONSIVE AND SHALL AUTOMATICALLY REDUCE BUILDING LIGHTING POWER DEMAND BY 15% IN RESPONSE TO A DEMAND RESPONSE SIGNAL PER 2022 CA ENERGY CODE SECTION 130.1 (e).

F. SEE DETAIL 7/E603.2 FOR DEMAND RESPONSE NETWORK LIGHTING CONTROLS DIAGRAM.

G. SEE DETAIL 1/E603.2 FOR NON-nLIGHT LIGHTING DIMMING CONTROLS DIAGRAM.

H. SEE DETAIL 2/E603.2 FOR nLIGHT LIGHTING DIMMING CONTROLS DIAGRAM.

PLOT DATE: 9/18/2025 5:14:40 PM

\\tet-file1\Users\gene.vea_TETR\Documents\12498-E-UC_gene.vea.rvt

IDENTIFICATION STAMP
DIV. OF THE STATE ARCHITECT
APP: 02-122821 INC: 2
REVIEWED FOR
SS ☑ FLS ☑ ACS ☑
DATE: 11/20/2025

Teter, Inc. expressly reserves its common law copyright and other property rights in these plans. This document, the ideas and designs incorporated herein, as an instrument of professional service, is not to be used in whole or part, for any other project without prior written authorization.

MARK	DATE	DESCRIPTION
A.	11/13/2025	DSA BACKCHECK

08/21/2025

TETER, INC.
FRESNO HEADQUARTERS
VISALIA | BAKERSFIELD | MODESTO | SAN LUIS OBISPO
ARCHITECTS ENGINEERS CONNECTED

VISALIA CAMPUS UNIVERSITY CENTER
COLLEGE OF THE SEQUOIAS
915 S. MOONEY BLVD
VISALIA, CA

DRAWING TITLE
ENLARGED LIGHTING PLAN - LECTURE ROOM INGRADE, AISLE, AND STEP LIGHT FIXTURES

PROJECT NO.
22-12498

DRAWING
E311.2

\\tet-file1\Users\gene.vea_TETER\Documents\12498-E-UC_gene.vea.rvt

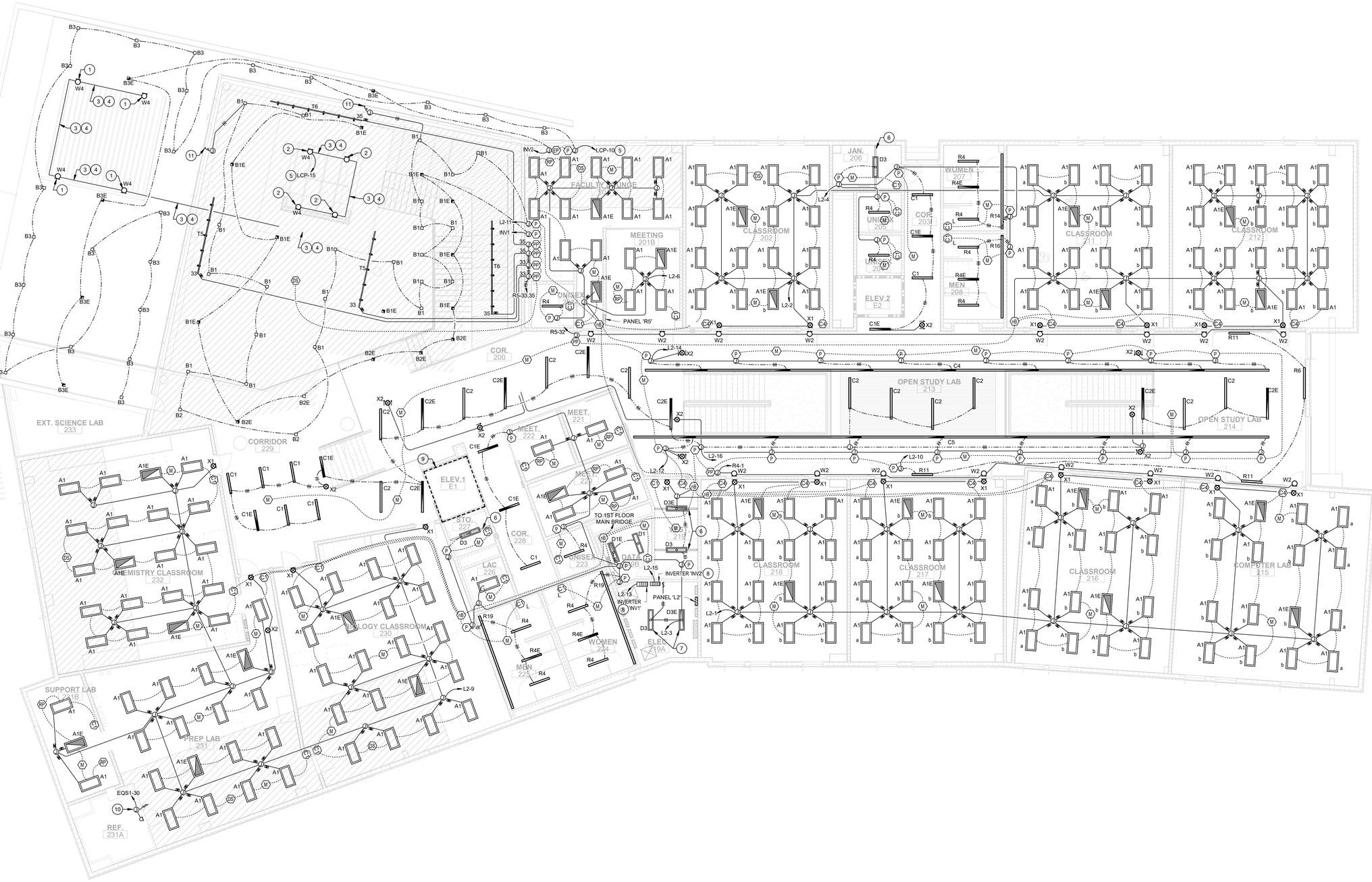

LIGHTING PLAN - SECOND FLOOR

1/8" = 1'-0" | 1

KEYNOTES

1. WALL MOUNT LIGHT FIXTURE ON PARAPET WALL 2' ABOVE TOP OF HORIZONTAL GRATE.
2. WALL MOUNT LIGHT FIXTURE ON PARAPET WALL 2' ABOVE BOTTOM OF WALL.
3. PROVIDE 3/4"C WITH 2#12 CU TWHN AND 1#12 CU GND. PROVIDE CONNECTION TO WALL MOUNTED LIGHT FIXTURE.
4. CONDUIT TO BE ROUTED ON ROOF TOP.
5. ROUTE LIGHT BRANCH CIRCUIT THROUGH CONTROL PANEL 'LCP'.
6. PROVIDE STRUT SUPPORT AND MOUNT LIGHTING FIXTURE AT 11'-0" AFF, PER DETAIL 8/E603.2.
7. SUSPEND LIGHTING FIXTURE TO 11'-0"AFF WITH AIRCRAFT CABLE AND PROVIDE BRACING PER DETAIL.
8. PROVIDE IOTA IIS SERIES LIGHTING INVERTER PER EMERGENCY LIGHTING INVERTER SCHDULE DETAIL 5/E800.2. PROVIDE MOUNTING PER DETAIL 3/E605.2
9. RATED WALL ASSEMBLY, TYPICAL. REFER TO ARCHITECTURAL DRAWINGS FOR RATED ASSEMBLY RATINGS AND PROVIDE FIRE STOPPING FOR PENETRATIONS PER FIRE STOPPING DETAILS.
10. PROVIDE SEAL PENETRATIONS PER 30/E602.2
11. PROVIDE POWER CONNECTION TO EXIT LIGHT FIXTURE THROUGH MULLION (SEE 1/E310.2) FROM LIGHT FIXTURE ABOVE CEILING.

CIRCULATION AREA CONTROL

A. DURING NORMAL BUSINESS HOURS (8AM TO 8PM), MONDAY-FRIDAY, PROGRAM LIGHTING IN CONTIGUOUS CORE CIRCULATION AREA AS FOLLOWS: CORRIDOR SPACES 200, 203, 228, 229, AND OPEN STUDY SPACES 213 & 214, SHALL BE SCHEDULED TO BE ON WITH MANUAL OVER-RIDE AND DIMMING CONTROL LOCATED IN VESTIBULE 219.

B. DURING WEEKENDS, HOLIDAYS AND OUTSIDE OF NORMAL BUSINESS HOURS, PROGRAM LIGHTING IN CONTIGUOUS CORE CIRCULATION AREA AS FOLLOWS: OCCUPANCY SENSORS IN CORRIDOR SPACES 200, 203, 228, 229, AND OPEN STUDY SPACES 213 & 214, SHALL BE GLOBALLY PROGRAMMED TO KEEP CORE CIRCULATION AREA LIGHTING ON WHILE THE BUILDING IS OCCUPIED.

LIGHTING WIRING LEGEND

LIGHTING BRANCH CIRCUIT IN EMT CONDUIT CONSISTING OF THE FOLLOWING BRANCH CIRCUIT CONDUCTORS:
1. HOT - 1#12 CU THHN (BROWN, ORANGE OR YELLOW)
2. NEUTRAL - 1#12 CU THHN (WHITE WITH COLORED STRIPE)
3. EQUIPMENT GROUNDING - 1#12 CU THHN (GREEN)

CLASS 2 CATEGORY 5E PLENUM RATED CABLE GREEN IN COLOR WITH RJ45 CONNECTORS ON EACH END:

TYPE MC-PCS MC LUMINARY CABLE CONSISTING OF THE FOLLOWING CIRCUIT CONDUCTORS:
1. CONTROLLED HOT - 1#12 CU THHN (BROWN)
2. UNSWITCHED HOT - 1#12 CU THHN (ORANGE)
3. NEUTRAL - 1#12 CU THHN (GREY)
4. EQUIPMENT GROUNDING - 1#12 CU THHN (GREEN)
5. 0-10VDC CONTROL: PVC JACKET CONTAINING 2#16 CU TFN (PURPLE & GRAY)

TYPE MC-PCS MC LUMINARY CABLE CONSISTING OF THE FOLLOWING CIRCUIT CONDUCTORS:
1. CONTROLLED HOT - 1#12 CU THHN (BROWN)
2. NEUTRAL - 1#12 CU THHN (GREY)
3. EQUIPMENT GROUNDING - 1#12 CU THHN (GREEN)
4. 0-10VDC CONTROL: PVC JACKET CONTAINING 2#16 CU TFN (PURPLE & GRAY)

LIGHTING SYMBOL LEGEND

PRIMARY SIDELIT ZONE:

- (M) NETWORK CEILING MOUNTED OCCUPANCY SENSOR
- (C1) SINGLE-ZONE NETWORK DIMMING MANUAL CONTROL STATION AT +48" TO TOP OF OUTLET BOX
- (C1L) SINGLE-ZONE NETWORK DIMMING MANUAL CONTROL STATION AT +48" TO TOP OF OUTLET BOX WITH STAINLESS STEEL LOCKING COVER PLATE
- (C4) FOUR-SCENE NETWORK DIMMING MANUAL CONTROL STATION AT +48" TO TOP OF OUTLET BOX
- (DS) NETWORK DAYLIGHTING SENSOR WITHIN DAYLIT ZONE
- (P) NETWORK DIMMING CONTROL RELAY
- (EP) NETWORK DIMMING EMERGENCY CONTROL RELAY
- (RP) NETWORK PLUG LOAD CONTROLLER RELAY
- (XB) NETWORK BRIDGE

GENERAL NOTES

A. CIRCUITS SUPPLYING EMERGENCY LIGHTING FIXTURES SHALL BE SUPPLIED BY A CONTROLLED HOT CONDUCTOR AND A CONSTANT HOT CONDUCTOR OF THE SAME BRANCH CIRCUIT.

B. EXIT SIGNAGE AND WALL MOUNTED EMERGENCY LIGHTING UNITS SHALL BE SUPPLIED BY AN UNSWITCHED HOT CONDUCTOR.

C. REFER TO ARCHITECTURAL SHEETS FOR ELEVATIONS OF WALL MOUNTED LIGHTING FIXTURES.

D. NETWORK DAYLIGHT SENSORS FOR AUTOMATIC DIMMING WITHIN A DAYLIT ZONE SHALL BE CALIBRATED SUCH THAT LIGHTING POWER FOR THE LIGHTING FIXTURES WITHIN THAT DAYLIT ZONE SHALL BE REDUCED BY 65% WHEN DAYLIT ILLUMINANCE IS 150% OF ILLUMINANCE RECEIVED FROM THE GENERAL LIGHTING SYSTEM AT FULL POWER.

E. LIGHTING CONTROLS SHALL BE DEMAND RESPONSIVE AND SHALL AUTOMATICALLY REDUCE BUILDING LIGHTING POWER DEMAND BY 15% IN RESPONSE TO A DEMAND RESPONSE SIGNAL PER 2022 CA ENERGY CODE SECTION 130.1 (e).

F. SEE DETAIL 7/E605.2 FOR DEMAND RESPONSE NETWORK LIGHTING CONTROLS DIAGRAM.

G. SEE DETAIL 1/E605.2 FOR nLIGHT ENABLED FIXTURE LIGHTING DIMMING CONTROLS DIAGRAM.

H. SEE DETAIL 2/E605.2 FOR nLIGHT DIMMER PACK LIGHTING DIMMING CONTROLS DIAGRAM.

I. PROVIDE FIRE STOPPING AT RATED WALL PENETRATIONS PER DRAWING E602.2, DETAILS 28 AND 30.

PLOT DATE: 9/4/2025 3:52:55 PM

IDENTIFICATION STAMP
DIV. OF THE STATE ARCHITECT
APP: 02-122821 INC: 2
REVIEWED FOR
SS ☑ FLS ☑ ACS ☑
DATE: 11/20/2025

Teter, Inc. expressly reserves its common law copyright and other property rights in these plans. This document, the ideas and designs incorporated herein, as an instrument of professional service, is not to be used in whole or in part, for any other project without prior written authorization.

MARK	DATE	DESCRIPTION
A.	11/13/2025	DSA BACKCHECK

08/21/2025

TETER, INC.
FRESNO HEADQUARTERS
VISALIA | BAKERSFIELD | MODESTO | SAN LUIS OBISPO
ARCHITECTS ENGINEERS CONNECTED

VISALIA CAMPUS UNIVERSITY CENTER
COLLEGE OF THE SEQUOIAS
915 S. MOONEY BLVD
VISALIA, CA

DRAWING TITLE: LIGHTING PLAN - SECOND FLOOR

PROJECT NO. 22-12498

DRAWING E320.2



PHOTMETRIC LEGEND

LOCATION	AVERAGE (fc)
COORRIDOR 127	11.6
COS ADMIN 120	10.9
CLASSROOM 113	5.6
CLASSROOM 114	5.3
CLASSROOM 115	5.3
CLASSROOM 116	5.0
CLASSROOM 117	5.3
DATA 119	10.4
ELEC 131	7.9
EMR106	16.7
EMR128	16.6
VESTIBULE 101A	13.0
VESTIBULE 101B	7.3
LECTURE ROOM 101	4.5
MECH 130A	10.7
MEETING 103D	8.0
MEETING 104D	8.0
MEETING 118D	7.9
RESTROOM 123	8.2
RESTROOM 110	9.7
RESTROOM 109	8.2
RESTROOM 122	7.9
OFFICE 120A	10.3
OFFICE 11C	9.6
OPEN STUDY LAB	13.7
PROGRAM OFFICE 103	8.9
PROGRAM OFFICE 104	8.3
PROGRAM OFFICE 118	8.0
STAIRS	12.4
STO 102	7.7
STO 101D	8.4
STO 101C	5.0
STO 130	5.4
STO 126	8.2

EMERGENCY LIGHTING PHOTOMETRICS - FIRST FLOOR

N.T.S. 1

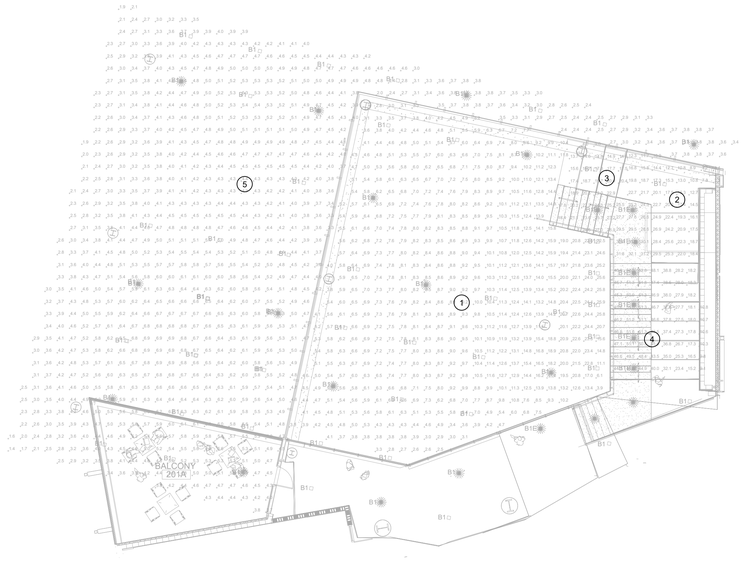

PHOTMETRIC LEGEND

	LOCATION	AVERAGE (fc)
1	MAIN LOBBY	11.6
2	STAIR LANDING	10.9
3	STAIRS - LOWER	5.6
4	STAIRS -UPPER	5.3
5	LOBBY EXTERIOR	5.3

EMERGENCY LIGHTING PHOTOMETRICS - FIRST FLOOR ENTRY STUDY LAB 100

N.T.S. 2

IDENTIFICATION STAMP
DIV. OF THE STATE ARCHITECT
APP: 02-122821 INC: 2
REVIEWED FOR
SS ☑ FLS ☑ ACS ☑
DATE: 11/20/2025

Teter, Inc. expressly reserves its common law copyright and other property rights in these plans. This document, the ideas and designs incorporated herein, as an instrument of professional service, is not to be used in whole or in part, for any other project without prior written authorization.

MARK	DATE	DESCRIPTION
A	11/13/2025	DSA BACKCHECK

REGISTERED PROFESSIONAL ENGINEER
BRYAN A. OLASS
No. E-77773
Exp. 06-30-26
ELECTRICAL
STATE OF CALIFORNIA

08/21/2025

TETER, INC.
FRESNO HEADQUARTERS
VISALIA | BAKERSFIELD | MODESTO | SAN LUIS OBISPO
ARCHITECTS ENGINEERS CONNECTED

VISALIA CAMPUS UNIVERSITY CENTER
COLLEGE OF THE SEQUOIAS
915 S. MOONEY BLVD
VISALIA, CA

DRAWING TITLE
EMERGENCY LIGHTING PHOTOMETRICS - FIRST FLOOR

PROJECT NO.
22-12498

DRAWING
E331.2

\\tetr-file1\Users\gene.vea_TETR\Documents\12498-E-UC_gene.vea.rvt

PLOT DATE: 9/4/2025 3:53:00 PM

\\tet-file1\Users\gene.vea_TETER\Documents\12498-E-UC_gene.vea.rvt



PHOTMETRIC LEGEND

LOCATION	AVERAGE (fc)
BIOLOGY CLASSROOM 230	4.3
CHEMISTRY CLASSROOM 232	6.0
CORRIDOR 203	7.9
CORRIDOR 224	8.8
CORRIDOR 200	12.7
CLASSROOM 202	5.9
CLASSROOM 211	5.3
CLASSROOM 212	5.2
CLASSROOM 215	4.5
CLASSROOM 216	5.3
CLASSROOM 217	5.6
CLASSROOM 218	5.9
DATA 219	8.9
ELEC 219A	6.2
EXT. SCIENCE LAB 233	3.9
FACULTY LOUNGE 201	5.9
MEETING 220	7.3
MEETING 201B	7.7
RESTROOM 207	8.9
RESTROOM 208	8.9
RESTROOM 224	7.4
RESTROOM 225	7.4
SUPPORT LAB 231B	7.8
CORRIDOR 229	18.5
STUDY LAB 213	14.7
VESTIBULE 219	7.7

IDENTIFICATION STAMP
DIV. OF THE STATE ARCHITECT
APP: 02-122821 INC: 2
REVIEWED FOR
SS ☑ FLS ☑ ACS ☑
DATE: 11/20/2025

Teter, Inc. expressly reserves its common law copyright and other property rights in these plans. This document, the ideas and designs incorporated herein, as an instrument of professional service, is not to be used in whole or part, for any other project without prior written authorization.

MARK	DATE	DESCRIPTION
A.	11/13/2025	DSA BACKCHECK

08/21/2025

TETER, INC.
FRESNO HEADQUARTERS
VISALIA | BAKERSFIELD | MODESTO | SAN LUIS OBISPO
ARCHITECTS ENGINEERS CONNECTED

VISALIA CAMPUS UNIVERSITY CENTER
COLLEGE OF THE SEQUOIAS
915 S. MOONEY BLVD
VISALIA, CA

DRAWING TITLE
EMERGENCY LIGHTING PHOTOMETRICS -SECOND FLOOR

PROJECT NO.
22-12498

DRAWING
E332.2

PLOT DATE: 9/4/2025 3:53:03 PM

EMERGENCY LIGHTING PHOTOMETRICS - SECOND FLOOR

N.T.S.

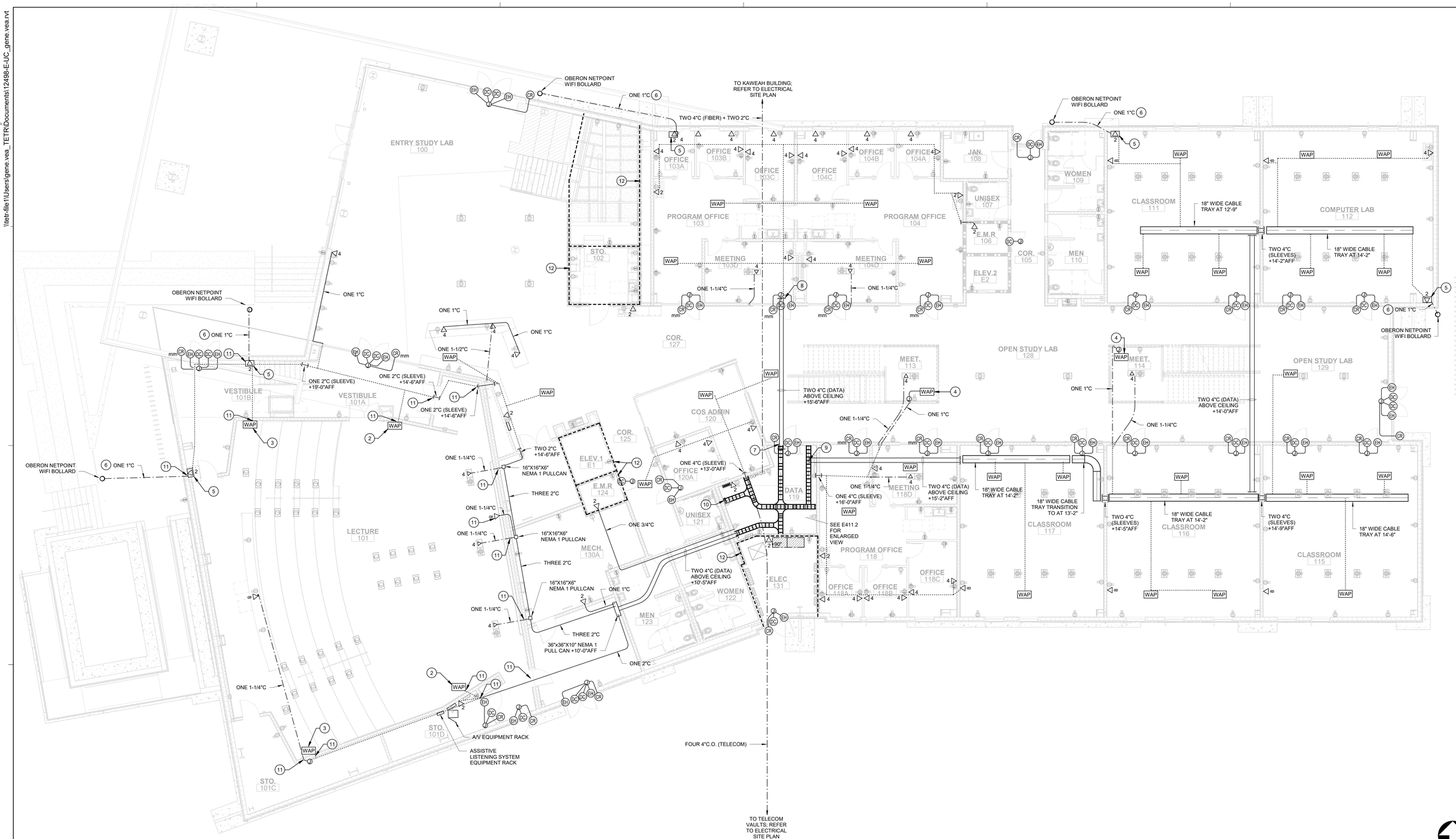

SIGNAL PLAN - FIRST FLOOR

1/8" = 1'-0" | 1

KEYNOTES

1. TERMINATE ONE CATEGORY 6 NETWORK CABLE WITH RJ45 CATEGORY 6 PLUG AT EXTRON ROOM SCHEDULER AT 48"A.F.F. ROOM SCHEDULER SHALL BE CONNECTED TO A POE NETWORK SWITCH.
2. PROVIDE WALL MOUNT BRACKET WITH ARTICULATING ARM AT +16'-4"O.C. ABOVE FINISHED FLOOR, FOR BLACK WALL MOUNTED WIRELESS ACCESS POINT.
3. PROVIDE WALL MOUNT BRACKET WITH ARTICULATING ARM AT +10'-0"O.C. ABOVE STAIR LANDING 1, FOR BLACK WALL MOUNTED WIRELESS ACCESS POINT.
4. CEILING MOUNTED WIRELESS ACCESS POINT LOCATED ON THE CEILING BENEATH THE STARIWAY LANDING. PROVIDE UNDERGROUND CONDUIT PATHWAY AND EXTEND CONDUIT PATHWAY TO ABOVE T-BAR CEILING ON BOTH SIDES.
5. PROVIDE 8"X8"X6" NEMA 1 HINGED ENCLOSURE PAINTED BLACK ON WALL AT +1'-0" ABOVE CEILING. PROVIDE TWO CATEGORY 6 LIGHTNING PROTECTOR RJ45 BISCUIT JACK MODULES TO TERMINATE TWO TYPE 'D10' CABLES FROM MDF.
6. PROVIDE TWO TYPE 'DX' OUTDOOR RATED PATCH CABLES WITH CATEGORY 6 RJ45 PLUG MODULES ON EACH END BETWEEN BISCUIT JACK MODULE AND WIFI BOLLARD ENCLOSURE. PROVIDE 48" SLACK CABLE AT WIFI BOLLARD.
7. KICK TWO 4"C DOWN AT 45-DEGREE THROUGH WALL TO AVOID BEAM AND DROP STRAIGHT DOWN TO 18" ABOVE CABLE TRAY.
8. KICK TWO 4"C DOWN AT 45-DEGREE THROUGH WALL TO AVOID BEAM.
9. PROVIDE 90-DEGREE SWEEPS IN TWO 4"C THROUGH WALL AND DROP STRAIGHT DOWN TO 18" ABOVE CABLE TRAY.
10. PROVIDE TWO 4"C UP THROUGH CEILING AND SECOND FLOOR DECK TO SECOND FLOOR DATA ROOM 231 ABOVE.
11. PROVIDE ACOUSTIC SEALANT AND WRAP OUTLET BOXES WITH ACOUSTIC PUTTY PADS AT ALL CONDUIT AND OUTLET BOX PENETRATIONS IN LECTURE HALL WALLS, REFER TO ARCHITECTURAL REQUIREMENTS FOR ACOUSTIC TREATMENT.
12. RATED WALL ASSEMBLY, TYPICAL. REFER TO ARCHITECTURAL DRAWINGS FOR RATED ASSEMBLY RATINGS AND PROVIDE FIRE STOPPING FOR PENETRATIONS PER FIRE STOPPING DETAILS.

TELECOMMUNICATION PATHWAY NOTES

A. CONDUIT AND CABLES FOR TELECOMMUNICATION OUTLETS SHALL BE CONCEALED WITHIN WALLS AND ABOVE CEILINGS.

B. TELECOMMUNICATION OUTLET BOXES SHALL BE 5" SQUARE BY 2-7/8" DEEP WITH A SINGLE-GANG BOX EXTENSION THAT IS MOUNTED FLUSH WITH THE FINISHED WALL.

C. PROVIDE ONE 1"C STUBBED FROM EACH TELECOMMUNICATION OUTLET BOX INTO THE ACCESSIBLE ATTIC SPACE TO FACILITATE TELECOMMUNICATION CABLE INSTALLATION.

D. PROVIDE THREADED SET SCREW CONNECTORS WITH POLYPROPYLENE BUSHINGS AT EACH END OF CONDUIT SYSTEMS AND SLEEVES USED FOR TELECOMMUNICATION CABLE INSTALLATION. BUSHINGS SHALL BE INSTALLED AND INSPECTED PRIOR TO CABLE INSTALLATION.

E. CABLE TRAYS SHALL COMPLY WITH NEMA VE 1 STANDARDS AND SHALL BE INSTALLED IN ACCORDANCE WITH NEMA VE 2 INSTALLATION GUIDELINES.

F. THROUGH WALL CONDUIT SLEEVES FOR LOW VOLTAGE CABLING SHALL BE CONCEALED ABOVE CEILINGS.

G. PROVIDE FIRE STOPPING AT RATED WALL PENETRATIONS PER DRAWING E602.2, DETAILS 18, 28, AND 30.

TELECOMMUNICATION CABLING NOTES

A. EACH TELECOMMUNICATION CABLE SHALL BE HOMERUN FROM THE TELECOMMUNICATION OUTLET TO A PATCH PANEL LOCATED IN THE TELECOMMUNICATION ROOM.

B. TELECOMMUNICATION CABLES SHALL BE NEATLY BUNDLED WITH VELCRO STRAPS AT 36"O.C.

C. TELECOMMUNICATION CABLES SHALL BE INDEPENDENTLY SUPPORTED FROM J-HOOKS WITHIN THE ACCESSIBLE ATTIC SPACE WHERE THEY ARE NOT WITHIN CONDUIT OR SUPPORTED ON CABLE TRAY.

D. TELECOMMUNICATION CABLES SHALL BE TERMINATED WITH MODULAR JACKS ON PATCH PANELS IN THE TELECOMMUNICATION ENCLOSURE AND ON MODULAR JACKS AT THE TELECOMMUNICATION OUTLETS.

E. TELECOMMUNICATION CABLE SERVING WIRELESS ACCESS POINTS SHALL BE TERMINATED WITH PLUG TYPE CONNECTORS AT THE LOCATION OF THE WIRELESS ACCESS POINT.

IDENTIFICATION STAMP
DIV. OF THE STATE ARCHITECT
APP: 02-122821 INC: 2
REVIEWED FOR
SS ☑ FLS ☑ ACS ☑
DATE: 11/20/2025

Teter, Inc. expressly reserves its common law copyright and other property rights in these plans. This document, the ideas and designs incorporated herein, as an instrument of professional service, is not to be used in whole or part, for any other project without prior written authorization.

MARK	DATE	DESCRIPTION
A.	11/13/2025	DSA BACKCHECK

08/21/2025

TETER, INC.
ARCHITECTS ENGINEERS CONNECTED
FRESNO HEADQUARTERS
VISALIA | BAKERSFIELD | MODESTO | SAN LUIS OBISPO

VISALIA CAMPUS UNIVERSITY CENTER
COLLEGE OF THE SEQUOIAS
915 S. MOONEY BLVD
VISALIA, CA

DRAWING TITLE
SIGNAL PLAN - FIRST FLOOR

PROJECT NO.
22-12498

DRAWING
E410.2

\\tet-file1\Users\gene.vea_TETR\Documents\12498-E-UC_gene.vea.rvt
PLOT DATE: 9/4/2025 3:53:23 PM

\\tet-file1\Users\gene.vea_TETR\Documents\12498-E-UC_gene.vea.rvt

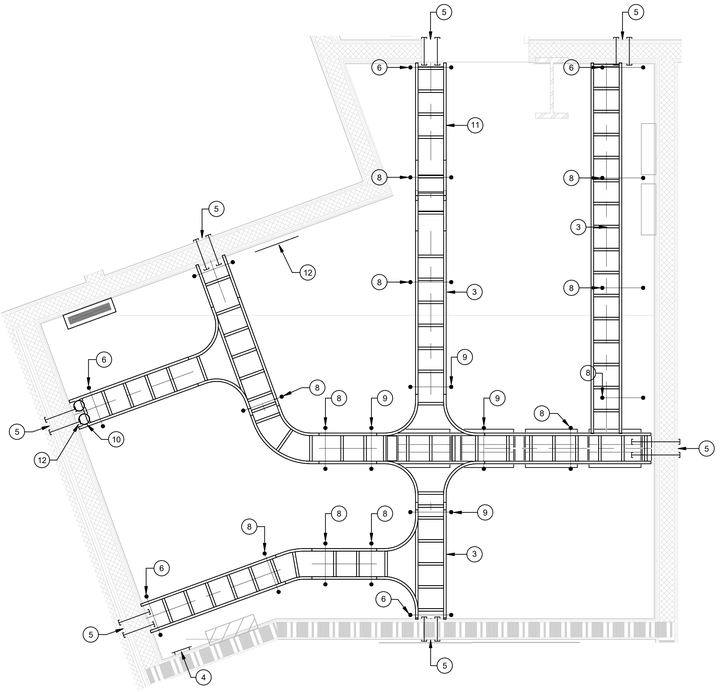

CABLE TRAY PLAN - DATA (MDF) ROOM 1/2" = 1'-0" 1

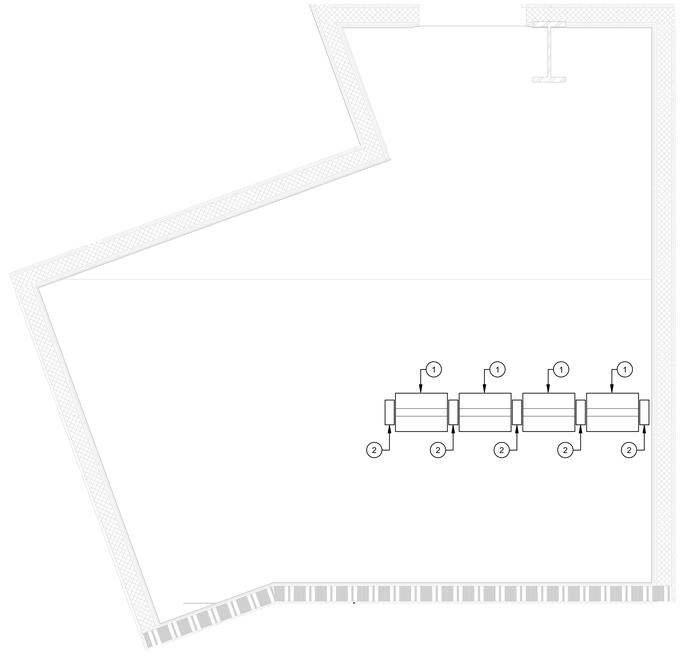

SIGNAL PLAN - DATA (MDF) ROOM 1/2" = 1'-0" 2

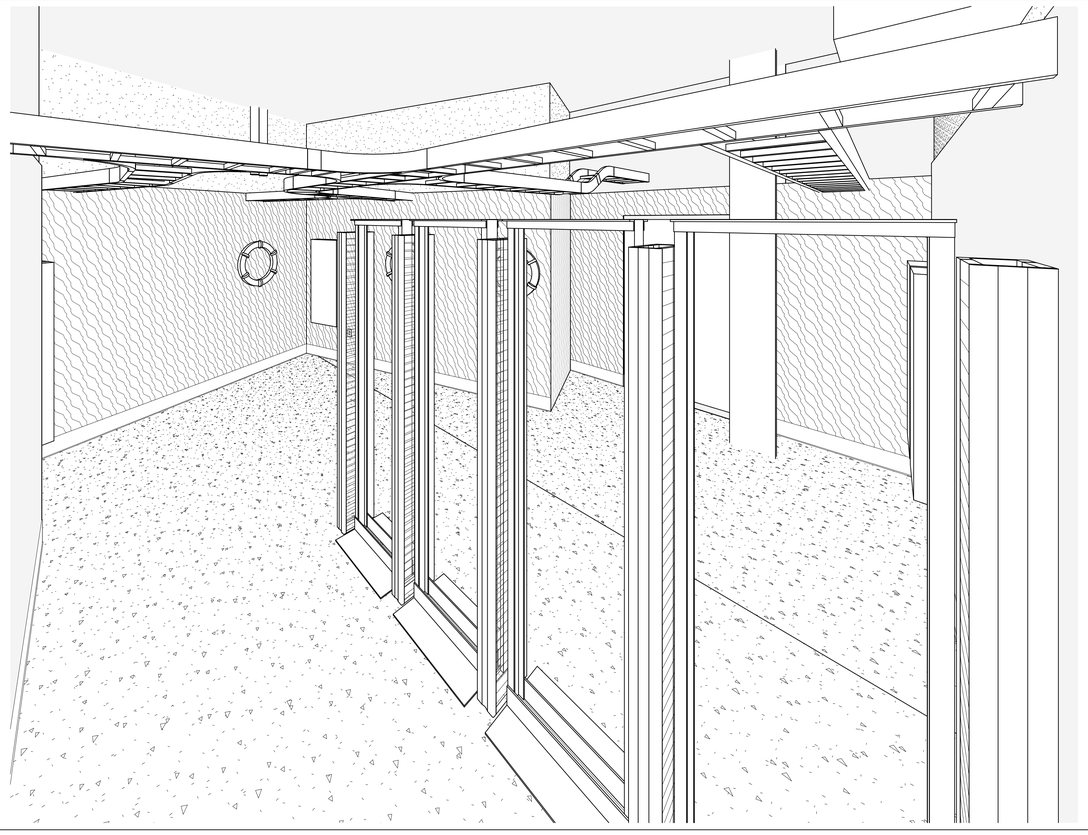

PERSPECTIVE - SERVER (MDF) ROOM N.T.S. 3

KEYNOTES

1. PROVIDE AND INSTALL 7'-6" TALL, 19" EIA STANDARD TWO-POST RACKS, BLACK IN COLOR: CHATSWORTH PRODUCTS, INC., MODEL 46353-705.
2. PROVIDE AND INSTALL 6" CHATSWORTH #40098-703 VERTICAL MOUNT CABLE MANAGEMENT 48 RU (ONE ON EACH SIDE AND BETWEEN EACH TWO-POST RACK).
3. PROVIDE STRAIGHT SECTION OF 12" WIDE LADDER TYPE CABLE RUNWAY MOUNTED AT 8'-0" A.F.F.
4. PROVIDE TELECOMUNICATION MAIN GROUNDING BUS (TMGB) AND GROUNDING AND BONDING FOR TELECOMMUNICATION RACKS AND PATHWAYS. PROVIDE #3/0 BARE COPPER BONDING JUMPER BETWEEN TMGB AND SWITCHBOARD 'DPH' GROUND BUS AND BETWEEN TMGB AND TGB LOCATED IN SECOND FLOOR DATA ROOM ABOVE. MOUNT AT 18" A.F.F. PER DETAIL 5/E604.2.
5. PROVIDE TWO 4"C EMT SLEEVES WITH POLYETHYLENE BUSHINGS THROUGH WALL, AT 10'-2" A.F.F. TO BOTTOM OF SLEEVE, INTO SPACE ABOVE CEILING IN ADJACENT ROOM.
6. PROVIDE END MOUNTING BRACKET CABLE RUNWAY SUPPORT, TYPICAL AT EACH END. REFER TO DETAIL 4/E604.2.
7. PROVIDE SIDE MOUNTING BRACKET CABLE RUNWAY SUPPORT, TYPICAL AT EACH END. REFER TO DETAIL 4E604.2.
8. PROVIDE RACK MOUNTING BRACKET CABLE RUNWAY SUPPORT, REFER TO DETAIL 4/E604.2.
9. PROVIDE TRAPEZE STYLE CABLE RUNWAY SUPPORT, REFER TO DETAIL 10/E604.2.
10. PROVIDE TWO 4"C UP THROUGH CEILING AND SECOND FLOOR DECK TO SECOND FLOOR DATA ROOM 231 ABOVE.
11. PROVIDE TRANSITION IN 12" WIDE LADDER TYPE CABLE RUNWAY UP TO 8'-6" A.F.F.
12. PROVIDE FIBER OPTIC CABLE SERVICE LOOP SECURED WITH STORAGE RING.
13. PROVIDE KICK IN TELECOMMUNICATION DISTRIBUTION CONDUITS TO AVOID STRUCTURAL MEMBERS.
14. CONTINUE TELECOMMUNICATION DISTRIBUTION CONDUITS ABOVE GYPBOARD CEILING TO 18" ABOVE CABLE TRAY IN DATA ROOM, TYPICAL.

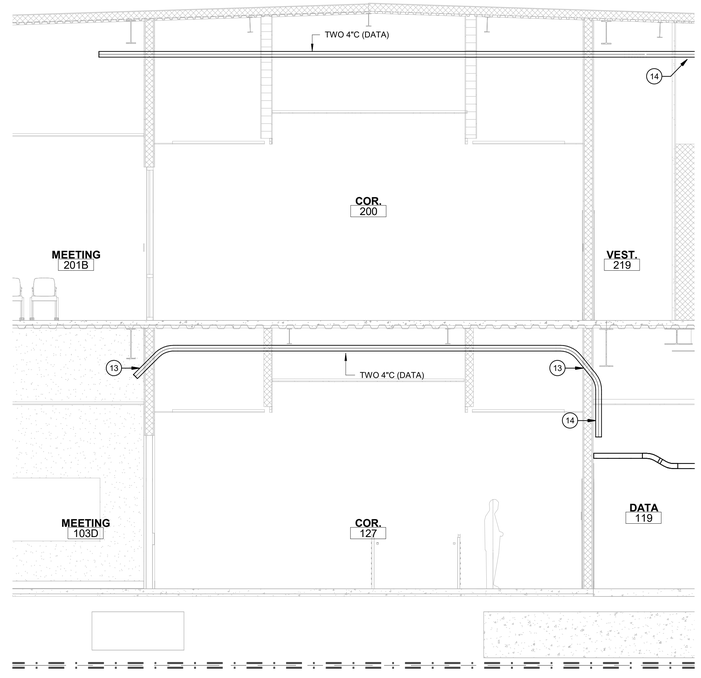

4" TELECOMMUNICATION DISTRIBUTION CONDUIT 1/4" = 1'-0" 4

IDENTIFICATION STAMP
DIV. OF THE STATE ARCHITECT
APP: 02-122821 INC: 2
REVIEWED FOR
SS ☑ FLS ☑ ACS ☑
DATE: 11/20/2025

Teter, Inc. expressly reserves its common law copyright and other property rights in these plans. This document, the ideas and designs incorporated herein, as an instrument of professional service, is not to be used in whole or part, for any purpose without prior written authorization.

MARK	DATE	DESCRIPTION
A	11/13/2025	DSA BACKCHECK

08/21/2025

TETER, INC.
FRESNO HEADQUARTERS
VISALIA | BAKERSFIELD | MODESTO | SAN LUIS OBISPO
ARCHITECTS ENGINEERS CONNECTED

VISALIA CAMPUS UNIVERSITY CENTER
COLLEGE OF THE SEQUOIAS
915 S. MOONEY BLVD
VISALIA, CA

DRAWING TITLE
SIGNAL PLAN - FIRST FLOOR DATA ROOM

PROJECT NO.
22-12498

DRAWING
E411.2

PLOT DATE: 9/4/2025 3:54:02 PM



SIGNAL PLAN - SECOND FLOOR

1/8" = 1'-0" | 1

KEYNOTES

1. PROVIDE TWO 4" EZ-PATH FIRE STOPPING DEVICES THROUGH RATED WALL ASSEMBLY ABOVE CEILING AT 17'-6"AFF. PER DETAIL 18/E602.2.
2. KICK TWO 4"C OVER AND SWEEP DOWN THROUGH WALL TO 18" ABOVE CABLE TRAY.
3. PROVIDE 90-DEGREE SWEEPS IN TWO 4"C THROUGH WALL AND DROP STRAIGHT DOWN TO 18" ABOVE CABLE TRAY.
4. KICK TWO 4"C UP TO 17'-6"AFF AFTER PASSING BELOW LAST BEAM TO 12" FROM EZ-PATH FIRE STOPPING SLEEVES AT BIOLOGY LAB 203.
5. RATED WALL ASSEMBLY, TYPICAL. REFER TO ARCHITECTURAL DRAWINGS FOR RATED ASSEMBLY RATINGS AND PROVIDE FIRE STOPPING FOR PENETRATIONS PER FIRE STOPPING DETAILS.
6. PROVIDE CONNECTION TO DATA OUTLET VIA CHASE IN ISLAND BENCH. REFER TO ISLAND BENCH MANUFACTURERS DRAWINGS.

TELECOMMUNICATION PATHWAY NOTES

A. CONDUIT AND CABLES FOR TELECOMMUNICATION OUTLETS SHALL BE CONCEALED WITHIN WALLS AND ABOVE CEILINGS.

B. TELECOMMUNICATION OUTLET BOXES SHALL BE 5" SQUARE BY 2-7/8" DEEP WITH A SINGLE-GANG BOX EXTENSION THAT IS MOUNTED FLUSH WITH THE FINISHED WALL.

C. PROVIDE ONE 1"C STUBBED FROM EACH TELECOMMUNICATION OUTLET BOX INTO THE ACCESSIBLE ATTIC SPACE TO FACILITATE TELECOMMUNICATION CABLE INSTALLATION.

D. PROVIDE THREADED SET SCREW CONNECTORS WITH POLYPROPYLENE BUSHINGS AT EACH END OF CONDUIT SYSTEMS AND SLEEVES USED FOR TELECOMMUNICATION CABLE INSTALLATION. BUSHINGS SHALL BE INSTALLED AND INSPECTED PRIOR TO CABLE INSTALLATION.

E. CABLE TRAYS SHALL COMPLY WITH NEMA VE 1 STANDARDS AND SHALL BE INSTALLED IN ACCORDANCE WITH NEMA VE 2 INSTALLATION GUIDELINES.

F. PROVIDE FIRE STOPPING AT RATED WALL PENETRATIONS PER DRAWING E602.2, DETAILS 18, 28, AND 30.

TELECOMMUNICATION CABLING NOTES

A. EACH TELECOMMUNICATION CABLE SHALL BE HOMERUN FROM THE TELECOMMUNICATION OUTLET TO A PATCH PANEL LOCATED IN THE TELECOMMUNICATION ROOM.

B. TELECOMMUNICATION CABLES SHALL BE NEATLY BUNDLED WITH VELCRO STRAPS AT 36"O.C.

C. TELECOMMUNICATION CABLES SHALL BE INDEPENDENTLY SUPPORTED FROM J-HOOKS WITHIN THE ACCESSIBLE ATTIC SPACE WHERE THEY ARE NOT WITHIN CONDUIT OR SUPPORTED ON CABLE TRAY.

D. TELECOMMUNICATION CABLES SHALL BE TERMINATED WITH MODULAR JACKS ON PATCH PANELS IN THE TELECOMMUNICATION ENCLOSURE AND ON MODULAR JACKS AT THE TELECOMMUNICATION OUTLETS.

E. TELECOMMUNICATION CABLE SERVING WIRELESS ACCESS POINTS SHALL BE TERMINATED WITH PLUG TYPE CONNECTORS AT THE LOCATION OF THE WIRELESS ACCESS POINT.

IDENTIFICATION STAMP
DIV. OF THE STATE ARCHITECT
APP: 02-122821 INC: 2
REVIEWED FOR
SS ☑ FLS ☑ ACS ☑
DATE: 11/20/2025

Teter, Inc. expressly reserves its common law copyright and other property rights in these plans. This document, the ideas and designs incorporated herein, as an instrument of professional service, is not to be used in whole or part, for any other project without prior written authorization.

MARK	DATE	DESCRIPTION
A.	11/13/2025	DSA BACKCHECK

08/21/2025

TETER, INC.
FRESNO HEADQUARTERS
VISALIA | BAKERSFIELD | MODESTO | SAN LUIS OBISPO
ARCHITECTS ENGINEERS CONNECTED

VISALIA CAMPUS UNIVERSITY CENTER
COLLEGE OF THE SEQUOIAS
915 S. MOONEY BLVD
VISALIA, CA

DRAWING TITLE
SIGNAL PLAN - SECOND FLOOR

PROJECT NO.
22-12498

DRAWING
E420.2

\\tet-file1\Users\gene.vea_TETER\Documents\12498-E-UC_gene.vea.rvt
PLOT DATE: 9/4/2025 3:54:22 PM

\\tet-file1\Users\gene.vea_TETR\Documents\12498-E-UC_gene.vea.rvt

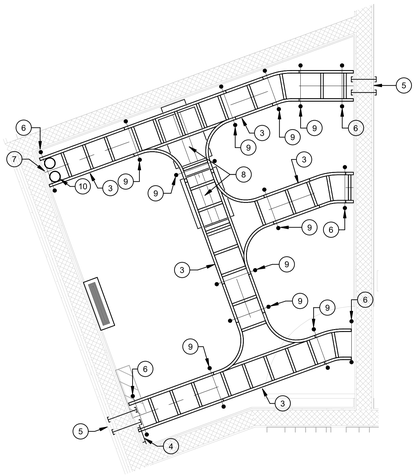

CABLE TRAY PLAN - SERVER (IDF) ROOM 1/2" = 1'-0" 1

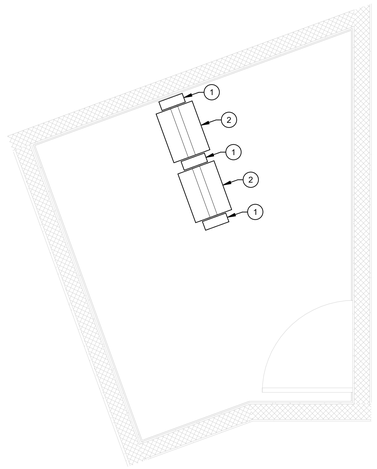

SIGNAL PLAN - SERVER (IDF) ROOM 1/2" = 1'-0" 2

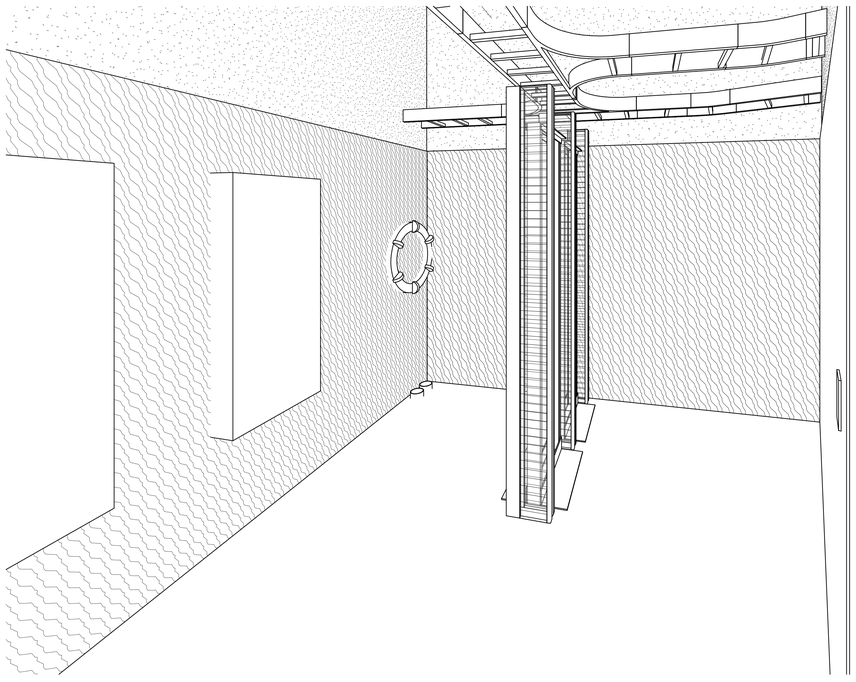

PERSPECTIVE - SERVER (IDF) ROOM N.T.S. 3

KEYNOTES

1. PROVIDE AND INSTALL 7'-6" TALL, 19" EIA STANDARD TWO-POST RACKS, BLACK IN COLOR: CHATSWORTH PRODUCTS, INC., MODEL 46353-705.
2. PROVIDE AND INSTALL 6" CHATSWORTH #40098-703 VERTICAL MOUNT CABLE MANAGEMENT 48 RU (ONE ON EACH SIDE AND BETWEEN EACH TWO-POST RACK).
3. PROVIDE 12" WIDE LADDER TYPE CABLE RUNWAY MOUNTED AT 8'-0" A.F.F.
4. PROVIDE TELECOMUNICATION GROUNDING BUS (TGB) AND GROUNDING AND BONDING FOR TELECOMMUNICATION RACKS AND PATHWAYS. PROVIDE #3/0 BARE COPPER BONDING JUMPER BETWEEN TGB AND TMGB LOCATED IN FIRST FLOOR DATA ROOM BELOW. MOUNT AT 18" A.F.F. PER DETAIL 5/E604.2.
5. PROVIDE TWO 4"C EMT SLEEVES WITH POLYETHYLENE BUSHINGS THROUGH WALL, INTO SPACE ABOVE CEILING IN ADJACENT ROOM.
6. PROVIDE END MOUNTING BRACKET CABLE RUNWAY SUPPORT, TYPICAL AT EACH END. REFER TO DETAIL 4/E604.2.
7. PROVIDE FIBER OPTIC CABLE SERVICE LOOP SECURED WITH STORAGE RING.
8. PROVIDE RACK MOUNTING BRACKET CABLE RUNWAY SUPPORT, REFER TO DETAIL 4/E604.2.
9. PROVIDE TRAPEZE STYLE CABLE RUNWAY SUPPORT, REFER TO DETAIL 10/E604.2.
10. PROVIDE TWO 4"C DOWN THROUGH DECK AND FIRST FLOOR CEILING TO FIRST FLOOR DATA ROOM 126 BELOW.

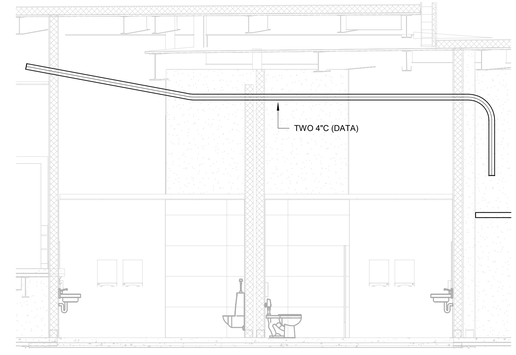

IDENTIFICATION STAMP
DIV. OF THE STATE ARCHITECT
APP: 02-122821 INC: 2
REVIEWED FOR
SS ☑ FLS ☑ ACS ☑
DATE: 11/20/2025

Teter, Inc. expressly reserves its common law copyright and other property rights in these plans. This document, the ideas and designs incorporated herein, as an instrument of professional service, is not to be used in whole or part, for any other project without prior written authorization.

MARK	DATE	DESCRIPTION
A	11/13/2025	DSA BACKCHECK

08/21/2025

TETER, INC.
FRESNO HEADQUARTERS
VISALIA | BAKERSFIELD | MODESTO | SAN LUIS OBISPO
ARCHITECTS ENGINEERS CONNECTED

VISALIA CAMPUS UNIVERSITY CENTER
COLLEGE OF THE SEQUOIAS
915 S. MOONEY BLVD
VISALIA, CA

DRAWING TITLE
SIGNAL PLAN - SECOND FLOOR DATA ROOM

PROJECT NO.
22-12498

DRAWING
E421.2

PLOT DATE: 9/4/2025 3:54:51 PM

IDENTIFICATION STAMP
DIV. OF THE STATE ARCHITECT
APP: 02-122821 INC: 2
REVIEWED FOR
SS ☑ FLS ☑ ACS ☑
DATE: 11/20/2025

Teter, Inc. expressly reserves its common law copyright and other property rights in these plans. This document, the ideas and designs incorporated herein, as an instrument of professional service, is not to be used in whole or part, for any other project without prior written authorization.

MARK	DATE	DESCRIPTION
A.	11/13/2025	DSA BACKCHECK

08/21/2025

TETER, INC.
FRESNO HEADQUARTERS
VISALIA | BAKERSFIELD | MODESTO | SAN LUIS OBISPO
ARCHITECTS ENGINEERS CONNECTED

TETER

VISALIA CAMPUS UNIVERSITY CENTER
COLLEGE OF THE SEQUOIAS
915 S. MOONEY BLVD
VISALIA, CA

DRAWING TITLE
FIRE ALARM PLAN - FIRST FLOOR

PROJECT NO.
22-12498

DRAWING
E510.2

\\tet-file1\Users\gene.vea_TETR\Documents\12498-E-UC_gene.vea.rvt

PLOT DATE: 9/4/2025 3:55:19 PM

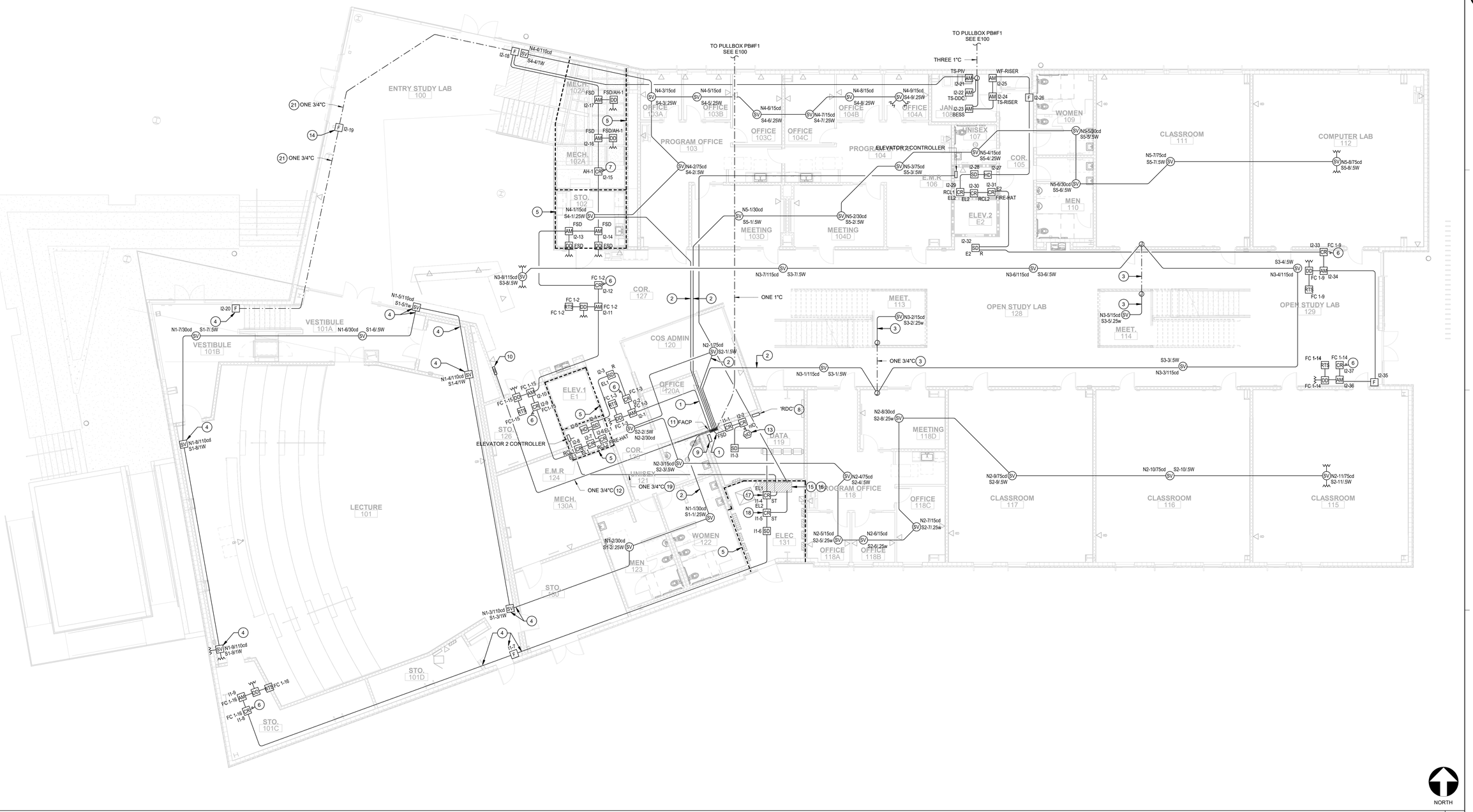

NORTH

FIRE ALARM PLAN - FIRST FLOOR

1/8" = 1'-0" | 1

KEYNOTES

1. 3/4"C WITH ONE "FA" CABLE (SLC) TO FIRE ALARM INITIATION DEVICES PER FIRE ALARM RISER DIAGRAM 1/E710.2, TYPICAL.
2. 3/4"C WITH ONE "FN" CABLE (VISUAL STROBES), AND ONE "FS" CABLE (SPEAKERS) TO FIRE ALARM NOTIFICATION APPLIANCES PER FIRE ALARM RISER DIAGRAM 1/E710.2, TYPICAL.
3. 1"C WITH TWO "FN" CABLES (VISUAL STROBES), AND TWO "FS" CABLES (SPEAKERS).
4. PROVIDE ACOUSTIC SEALANT AND WRAP OUTLET BOXES WITH ACOUSTIC PUTTY PADS AT ALL CONDUIT AND OUTLET BOX PENETRATIONS IN LECTURE HALL WALLS, REFER TO ARCHITECTURAL REQUIREMENTS FOR ACOUSTIC TREATMENT.
5. RATED WALL ASSEMBLY, TYPICAL. REFER TO ARCHITECTURAL DRAWINGS FOR RATED ASSEMBLY RATINGS AND PROVIDE FIRE STOPPING FOR PENETRATIONS PER FIRE STOPPING DETAILS.
6. COORDINATE WITH MECHANICAL CONTRACTOR AND PROVIDE WIRING AND PROGRAMMING FOR FAN COIL FAN SHUT OFF THROUGH FIRE ALARM CONTROL RELAY 20/E602.2.
7. COORDINATE WITH MECHANICAL CONTRACTOR AND PROVIDE WIRING AND PROGRAMMING FOR 'AH-1' UNIT SHUT OFF THROUGH FIRE ALARM CONTROL RELAY 20/E602.2.
8. PROVIDE FIRE ALARM DOCUMENTATION CABINET NEXT TO FIRE ALARM CONTROL PANEL.
9. PROVIDE FIRE ALARM DIGITAL CELLULAR ALARM RADIO TRANSMITTER AT +60" AFF TO BOTTOM OF CABINET.
10. PROVIDE REMOTE ANNUNCIATOR AND CABINET AT +60" AFF TO TOP OF CABINET.
11. PROVIDE FIRE ALARM CONTROL PANEL 'FACP' AND MOUNT TO WALL AT + 72" AFF MAXIMUM TO TOP OF PANEL.
12. PROVIDE ONE 3/4"C WITH 2#12 CU THWN + 1#10 CU GND AND ONE TYPE FA CABLE FOR CONNECTION TO REMOTE ANNUNCIATOR.
13. PROVIDE CONNECTION TO LIGHTING NETWORK DRY CONTACTOR INTERFACE TO RESTORE LECTURE ROOM 101 LIGHTS TO 100% FULL BRIGHTNESS UPON ACTIVATION OF FIRE ALARM SYSTEM. REFER TO DETAIL 8/E605.2.
14. FIRE ALARM MANUAL PULL STATION DEVICES TO BE SEMI-FLUSH MOUNTED ON POST WITH CONDUIT CONCEALED WITHIN POST.
15. PROVIDE CONNECTIONS TO ELEVATOR 1 SHUNT-TRIP AND AUXILIARY CONTACT ACCESSORIES AT CIRCUIT BREAKER 'DPH-8'.
16. PROVIDE CONNECTIONS TO ELEVATOR 2 SHUNT-TRIP AND AUXILIARY CONTACT ACCESSORIES AT CIRCUIT BREAKER 'DPH-9'.
17. PROVIDE ONE 3/4"C WITH 2#12 CU THWN AND 1#12 CU GND. PROVIDE CONNECTION FROM ELEVATOR 1 FIRE ALARM CONTROL RELAY TO SHUNT-TRIP ACCESSORY OF CIRCUIT BREAKER DPH-8.
18. PROVIDE ONE 3/4"C WITH 2#12 CU THWN AND 1#12 CU GND. PROVIDE CONNECTION FROM ELEVATOR 2 FIRE ALARM CONTROL RELAY TO SHUNT-TRIP ACCESSORY OF CIRCUIT BREAKER 'DPH-9'.
19. PROVIDE 3/4"C WITH 2#16 CU THWN. PROVIDE CONNECTION FROM AUXILLIARY CONTACTS FROM SHUNT TRIP CIRCUIT BREAKER 'DPH-8' TO ELEVATOR 1 MACHINE CONTROLLER.
20. PROVIDE 3/4"C WITH 2#16 CU THWN. PROVIDE CONNECTION FROM AUXILLIARY CONTACTS FROM SHUNT TRIP CIRCUIT BREAKER 'DPH-9' TO ELEVATOR 2 MACHINE CONTROLLER.
21. 3/4"C WITH TWO "FA" CABLES.

FIRE ALARM SYSTEM INSTALLATION NOTES

A. THE LOCATION OF AUTOMATIC DETECTORS, MANUAL PULL STATIONS AND OTHER FIRE ALARM EQUIPMENT AND DEVICES, AS SHOWN ON PLAN, ARE FOR REFERENCE ONLY, AND DO NOT CONSTITUTE SHOP DRAWINGS WHICH ARE REQUIRED FOR REVIEW AND APPROVAL.

B. ALL DRAWINGS ARE DIAGRAMMATIC ONLY, AND SHALL NOT BE USED IN DETERMINING ACTUAL CONDUIT ROUTING. THE CONTRACTOR SHALL VERIFY ALL CONDUIT ROUTING CONDITIONS AT THE PROJECT SITE AS CONSTRUCTION PROGRESSES.

C. ALL FIRE ALARM DATA, COMMUNICATIONS AND INITIATING CIRCUITS SHALL BE INSTALLED UTILIZING SOLID COPPER CONDUCTORS WITH OUTER COVERING COLORS PER THE SPECIFICATIONS AND AS SHOWN ON THE DRAWINGS. ALL SMOKE DAMPER AND REMOTE TROUBLE INDICATOR CIRCUITS SHALL BE YELLOW. ALL CIRCUITS SHALL BE INDIVIDUALLY LABELED, BOTH AT THE DEVICE END AND AT THE SIGNAL TERMINAL CABINET AND/OR FIRE ALARM MASTER PANEL TERMINATION POINT.

D. ALL FIRE ALARM CIRCUITS SHALL BE CONTINUOUS FROM DEVICE TO DEVICE. SPLICES ARE NOT ALLOWED UNLESS IN COVERED JUNCTION BOXES ON APPROVED TERMINAL BLOCKS. 'T' TAPPING IS ALLOWED ONLY IN INITIATION LOOPS CONNECTING ADDRESSABLE DEVICES AND ONLY UNDER THESE CONDITIONS. UNDER NO CIRCUMSTANCES SHALL 'T' TAPPING BE PERMITTED BETWEEN CONVENTIONAL DEVICES.

E. SMOKE DETECTORS SHALL BE INSTALLED AWAY FROM AIR SUPPLY GRILLES AT A MINIMUM DISTANCE OF 3' PER NFPA 72 29.8.3.4 OR GREATER AS RECOMMENDED BY THE MANUFACTURER.

F. CONTRACTOR SHALL SYNCHRONIZE TWO OR MORE STROBES IN ONE ROOM AND TWO OR MORE SPEAKERS WITHIN HEARING OF EACH OTHER.

G. THE FIRE ALARM SYSTEM SHALL CONFORM TO THE 2022 CALIFORNIA ELECTRICAL CODE (CEC) ARTICLE 760 AND THE 2019 CALIFORNIA FIRE CODE (CFC) § 105.7 & § 907, AND CALIFORNIA BUILDING CODE (CBC) 907.

H. PROVIDE FIRE STOPPING AT RATED WALL PENETRATIONS PER DRAWING E602.2, DETAILS 28 AND 30.

\\tet-file1\Users\gene.vea_TETER\Documents\12498-E-UC_gene.vea.rvt

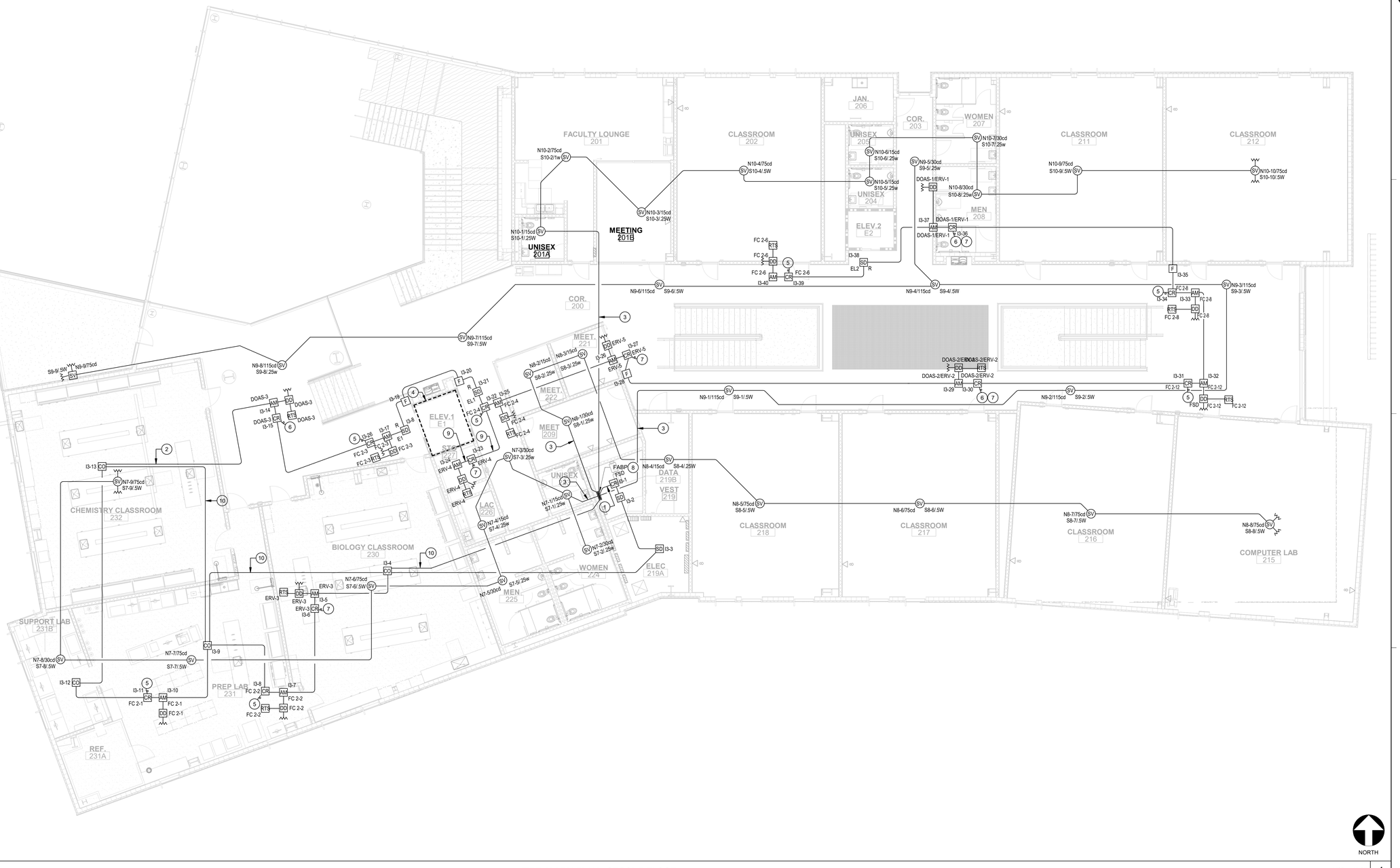

FIRE ALARM PLAN - SECOND FLOOR

1/8" = 1'-0" | 1

KEYNOTES

1. 3/4"C WITH ONE "FA" CABLE (SLC), AND 2 #14 CU THWN (AUX. POWER) TO FIRE ALARM INITIATION DEVICES PER FIRE ALARM RISER DIAGRAM 1/E710.2, TYPICAL (U.O.N.).
2. 3/4"C WITH ONE "FA" CABLE (SLC) TO DOWNSTREAM FIRE ALARM INITIATION DEVICES PER FIRE ALARM RISER DIAGRAM 1/E710.2, TYPICAL.
3. 3/4"C WITH ONE "FN" CABLE (VISUAL STROBES), AND ONE "FS" CABLE (SPEAKERS) TO FIRE ALARM NOTIFICATION APPLIANCES PER FIRE ALARM RISER DIAGRAM 1/E710.2, TYPICAL.
4. RATED WALL ASSEMBLY, TYPICAL. REFER TO ARCHITECTURAL DRAWINGS FOR RATED ASSEMBLY RATINGS AND PROVIDE FIRE STOPPING FOR PENETRATIONS PER FIRE STOPPING DETAILS.
5. COORDINATE WITH MECHANICAL CONTRACTOR AND PROVIDE WIRING AND PROGRAMMING FOR FAN COIL FAN SHUT OFF THROUGH FIRE ALARM CONTROL RELAY.
6. COORDINATE WITH MECHANICAL CONTRACTOR AND PROVIDE WIRING AND PROGRAMMING FOR DIRECT OUTSIDE AIR UNIT SHUT OFF THROUGH FIRE ALARM CONTROL RELAY.
7. COORDINATE WITH MECHANICAL CONTRACTOR AND PROVIDE WIRING AND PROGRAMMING FOR ENERGY RECOVERY VENTILATOR SHUT OFF THROUGH FIRE ALARM CONTROL RELAY.
8. PROVIDE FIRE ALARM BOOSTER PANEL "FABP" AND MOUNT TO WALL AT + 72" AFF MAXIMUM TO TOP OF PANEL.
9. PROVIDE ONE 3/4"C WITH TWO "FA" CABLES.
10. PROVIDE 2#14 CU THWN (24VDC AUX. POWER).

FIRE ALARM SYSTEM INSTALLATION NOTES

A. THE LOCATION OF AUTOMATIC DETECTORS, MANUAL PULL STATIONS AND OTHER FIRE ALARM EQUIPMENT AND DEVICES, AS SHOWN ON PLAN, ARE FOR REFERENCE ONLY, AND DO NOT CONSTITUTE SHOP DRAWINGS WHICH ARE REQUIRED FOR REVIEW AND APPROVAL.

B. ALL DRAWINGS ARE DIAGRAMMATIC ONLY, AND SHALL NOT BE USED IN DETERMINING ACTUAL CONDUIT ROUTING. THE CONTRACTOR SHALL VERIFY ALL CONDUIT ROUTING CONDITIONS AT THE PROJECT SITE AS CONSTRUCTION PROGRESSES.

C. ALL FIRE ALARM DATA, COMMUNICATIONS AND INITIATING CIRCUITS SHALL BE INSTALLED UTILIZING SOLID COPPER CONDUCTORS WITH OUTER COVERING COLORS PER THE SPECIFICATIONS AND AS SHOWN ON THE DRAWINGS. ALL SMOKE DAMPER AND REMOTE TROUBLE INDICATOR CIRCUITS SHALL BE YELLOW. ALL CIRCUITS SHALL BE INDIVIDUALLY LABELED, BOTH AT THE DEVICE END AND AT THE SIGNAL TERMINAL CABINET AND/OR FIRE ALARM MASTER PANEL TERMINATION POINT.

D. ALL FIRE ALARM CIRCUITS SHALL BE CONTINUOUS FROM DEVICE TO DEVICE. SPLICES ARE NOT ALLOWED UNLESS IN COVERED JUNCTION BOXES ON APPROVED TERMINAL BLOCKS. "T" TAPPING IS ALLOWED ONLY IN INITIATION LOOPS CONNECTING ADDRESSABLE DEVICES AND ONLY UNDER THESE CONDITIONS. UNDER NO CIRCUMSTANCES SHALL "T" TAPPING BE PERMITTED BETWEEN CONVENTIONAL DEVICES.

E. SMOKE DETECTORS SHALL BE INSTALLED AWAY FROM AIR SUPPLY GRILLES AT A MINIMUM DISTANCE OF 3' PER NFPA 72 29.8.3.4 OR GREATER AS RECOMMENDED BY THE MANUFACTURER.

F. CONTRACTOR SHALL SYNCHRONIZE TWO OR MORE STROBES IN ONE ROOM AND TWO OR MORE SPEAKERS WITHIN HEARING OF EACH OTHER.

G. THE FIRE ALARM SYSTEM SHALL CONFORM TO THE 2022 CALIFORNIA ELECTRICAL CODE (CEC) ARTICLE 760 AND THE 2019 CALIFORNIA FIRE CODE (CFC) § 105.7 & § 907, AND CALIFORNIA BUILDING CODE (CBC) 907.

H. PROVIDE FIRE STOPPING AT RATED WALL PENETRATIONS PER DRAWING E602.2, DETAILS 28 AND 30.

PLOT DATE: 9/4/2025 3:55:46 PM

IDENTIFICATION STAMP
DIV. OF THE STATE ARCHITECT
APP: 02-122821 INC: 2
REVIEWED FOR
SS ☑ FLS ☑ ACS ☑
DATE: 11/20/2025

Teter, Inc. expressly reserves its common law copyright and other property rights in these plans. This document, the ideas and designs incorporated herein, as an instrument of professional service, is not to be used in whole or part, for any other project without prior written authorization.

MARK	DATE	DESCRIPTION
A.	11/13/2025	DSA BACKCHECK

08/21/2025

TETER, INC.
FRESNO HEADQUARTERS
VISALIA | BAKERSFIELD | MODESTO | SAN LUIS OBISPO
ARCHITECTS ENGINEERS CONNECTED

VISALIA CAMPUS UNIVERSITY CENTER
COLLEGE OF THE SEQUOIAS
915 S. MOONEY BLVD
VISALIA, CA

DRAWING TITLE
FIRE ALARM PLAN - SECOND FLOOR

PROJECT NO.
22-12498

DRAWING
E520.2

\\tet-file1\Users\gene.vea_TETER\Documents\12498-E-UC_gene.vea.rvt

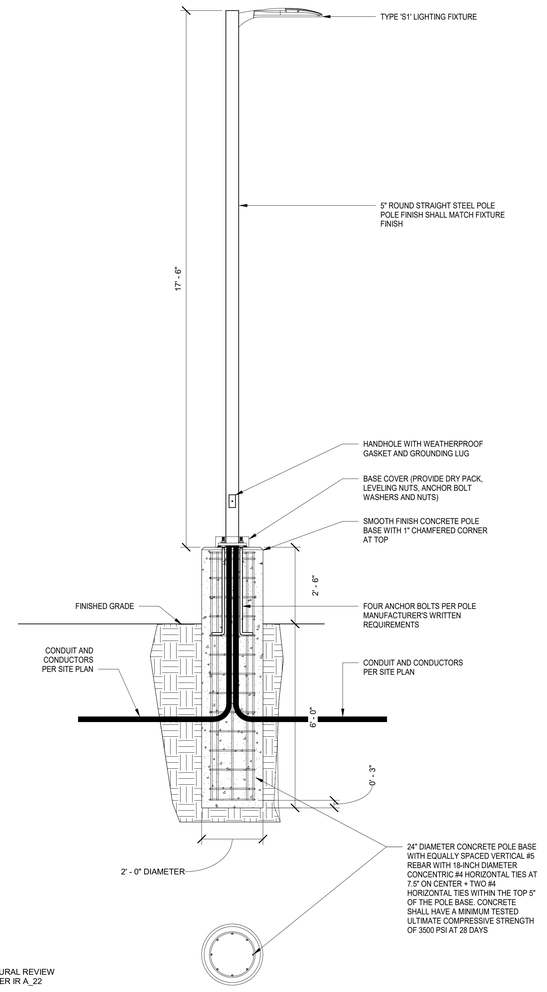

NOTE: DSA STRUCTURAL REVIEW IS NOT REQUIRED PER IR A_22

POLE FIXTURE MOUNTING — 1/2" = 1'-0" — 23

NOTE:
CLEARANCES, SEPARATIONS, AND TRENCHING REQUIREMENTS PER SPECIFICATIONS.

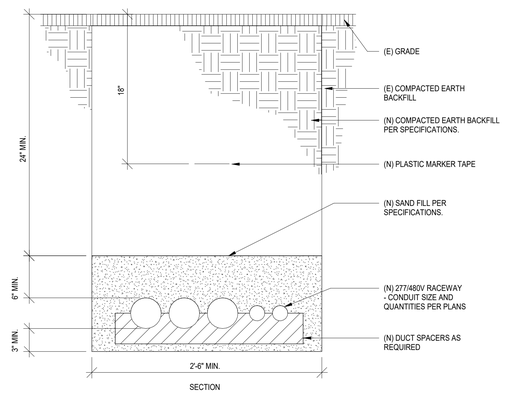

SECTION

TYPICAL TRENCH SECTION — N.T.S. — 12

*NOTE:

WHERE PULLBOX IS ADJACENT TO CONCRETE WALK, EXTEND MOW STRIP TO CONNECT WITH WALK. CONCRETE MOW STRIP IS NOT REQUIRED ON PULLBOXES INSTALLED IN ASPHALT PAVING.

	DIMENSION 'a'	DIMENSION 'b'	ENGRAVING	LID TYPE
PB#L1	15.5"	10"	LIGHTING	CONCRETE
PB#L2	20.75"	10.625"	LIGHTING	CONCRETE

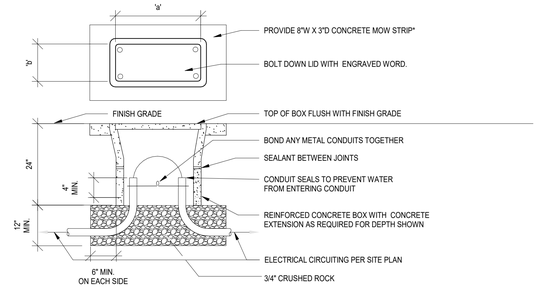

U.G. PULLBOX — N.T.S. — 2

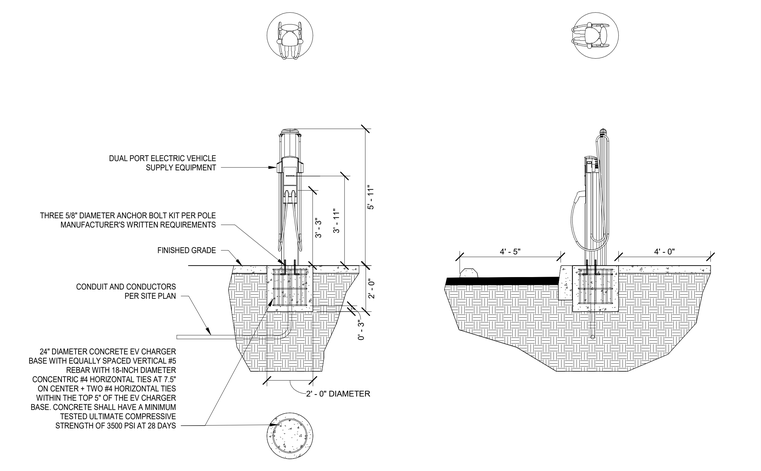

MAXIMUM WEIGHT 110 LBS

ELECTRIC VEHICLE SUPPLY EQUIPMENT (EVSE) MOUNTING - DUAL PORT — N.T.S. — 14

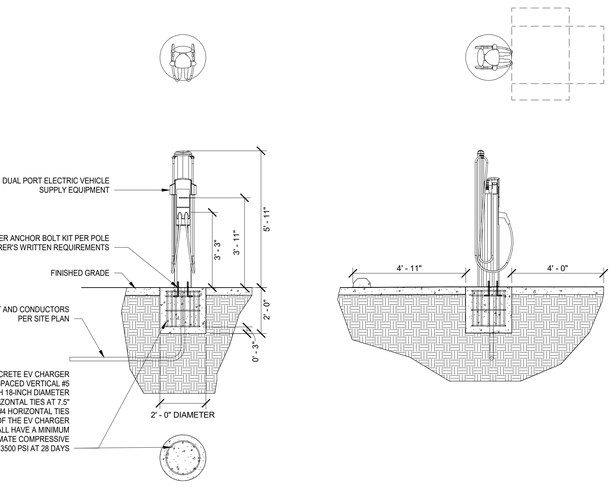

MAXIMUM WEIGHT 110 LBS

ELECTRIC VEHICLE SUPPLY EQUIPMENT (EVSE) MOUNTING - ACCESSIBLE PARKING — N.T.S. — 4

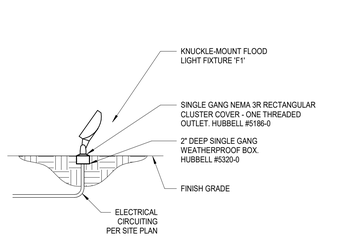

LANDSCAPE LIGHTING MOUNTING — N.T.S. — 20

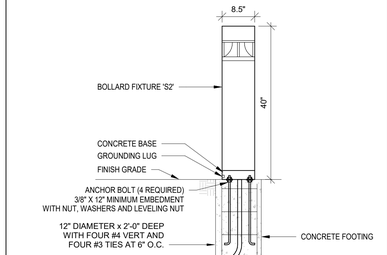

MAXIMUM WEIGHT 30LBS.

BOLLARD FIXTURE MOUNTING — 3/4" = 1'-0" — 15

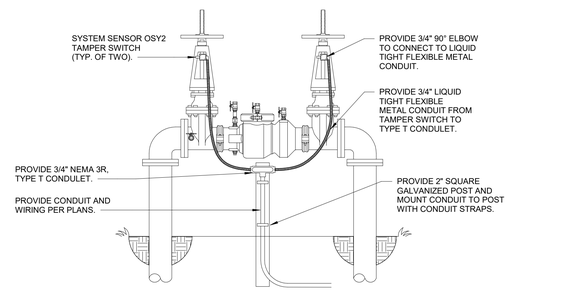

TAMPER SWITCHES AT DDCV — N.T.S. — 5

IDENTIFICATION STAMP
DIV. OF THE STATE ARCHITECT
APP: 02-122821 INC: 2
REVIEWED FOR
SS ☑ FLS ☑ ACS ☑
DATE: 11/20/2025

Teter, Inc. expressly reserves its common law copyright and other property rights in these plans. This document, the ideas and designs incorporated herein, as an instrument of professional service, is not to be used in whole or part, for any other project without prior written authorization.

MARK	DATE	DESCRIPTION
A	11/13/2025	DSA BACKCHECK

08/21/2025

TETER, INC.
FRESNO HEADQUARTERS
VISALIA | BAKERSFIELD | MODESTO | SAN LUIS OBISPO
ARCHITECTS ENGINEERS CONNECTED

VISALIA CAMPUS UNIVERSITY CENTER
COLLEGE OF THE SEQUOIAS
915 S. MOONEY BLVD
VISALIA, CA

DRAWING TITLE
ELECTRICAL DETAILS - SITE

PROJECT NO.
22-12498

DRAWING
E600.2

PLOT DATE: 9/4/2025 3:55:50 PM

\\tet-file1\Users\gene.vea_TETR\Documents\12498-E-UC_gene.vea.rvt

PLOT DATE: 9/4/2025 3:55:53 PM

BATTERY ENERGY STORAGE SYSTEM CODE ANALYSIS:

MANUFACTURER:	SOCOMEC
MODEL:	SUNSYS HES-L
BATTERY SYSTEM CHEMISTRY:	LITHIUM-ION
BATTERY STORAGE CAPACITY:	186 KILOWATT-HOURS
POWER OUTPUT:	50 KVA
STYLE:	CABINET (NON-WALK IN)
LISTINGS:	UL 1741 UL 9540A LARGE-SCALE FIRE TEST IEEE 1547 CALIFORNIA RULE 21
INSTALLATION CONDITION:	OUDTOOR, NEAR EXPOSURES PER CFC 1207.8

CFC TABLE 1207.8 COMPLIANCE:

1207.8.3: BATTERY SYSTEM IS LOCATED A MINIMUM OF 10 FEET FROM LOT LINES, PUBLIC WAYS, BUILDINGS, STORED COMBUSTIBLE MATERIALS, HAZARDOUS MATERIALS, AND HIGH-PILED STOCK.

1207.5.3: BATTERY SYSTEM LOCATED AT GRADE LEVEL.

1207.5.5: BATTERY SYSTEM IS OUTDOORS AND IS NOT A WALK-IN UNIT.

1207.5.2: BATTERY STORAGE CAPACITY DOES NOT EXCEED THE MAXIMUM ALLOWABLE QUANTITY OF 600 KWH FOR LITHIUM-ION BATTERY TYPE PER TABLE 1207.5.

1207.5.6: BATTERY STORAGE ENCLOSURE SIZE DOES NOT EXCEED THE MAXIMUM ENCLOSURE SIZE.

1207.5.8: BATTERY SYSTEM IS SEPERATED FROM MEANS OF EGRESS.

1207.5.1: SPECIFIED BATTERY STORAGE SYSTEM HAS UNDERGONE LARGE-SCALE FIRE TESTING PER UL9540A.

1207.5.4: BATTERY SYSTEM IS OUTDOORS AND IS NOT A WALK-IN UNIT. SPECIFIED BATTERY SYSTEM HAS INTEGRAL FIRE DETECTION AND SUPPRESSION.

1207.6: TECHNOLOGY-SPECIFIC PROTECTION INCLUDES INTEGRAL EXPLOSION CONTROL AND THERMAL RUNAWAY MANAGEMENT.

SITE CRITERIA:

SEISMIC FACTORS

RISK CATEGORY	IV
IMPORTANCE FACTOR (Ip)	1.5
Ss	0.553
S1	0.219
SITE CLASS	D
SDS	0.5
SEISMIC DESIGN CATEGORY	D
SYSTEM OVERSTRENGTH FACTOR	2.0
COMPONENT AMPLIFICATION FACTOR (ap)	1.0
COMPONENT AMPLIFICATION FACTOR (Rp)	1.5
ANALYSIS PROCEDURE USED	ASCE 7-16 CHAPTER 13

WIND FACTORS:

RISK CATEGORY	IV
ULTIMATE DESIGN WIND SPEED	105 MPH
WIND EXPOSURE	C

SOIL PARAMETERES:
SEE S000.2 BUILDING FOUNDATION AND PREPERATION

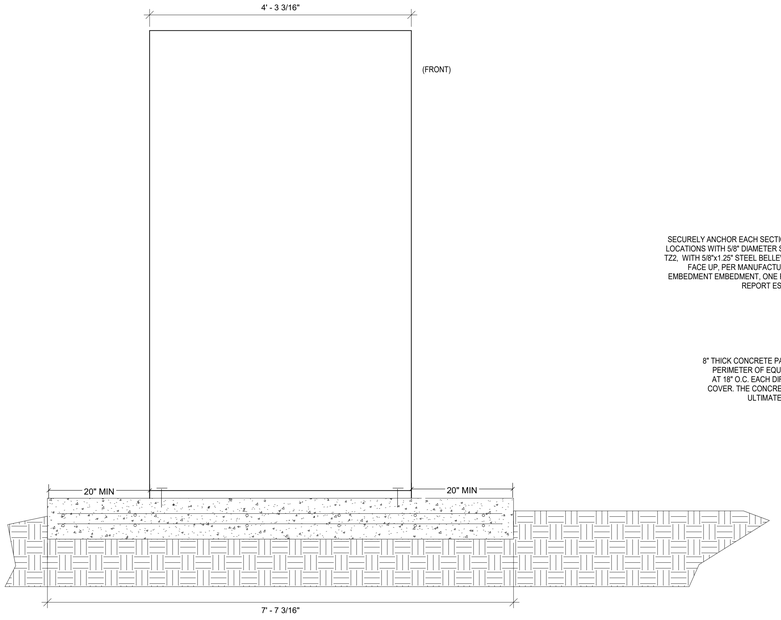

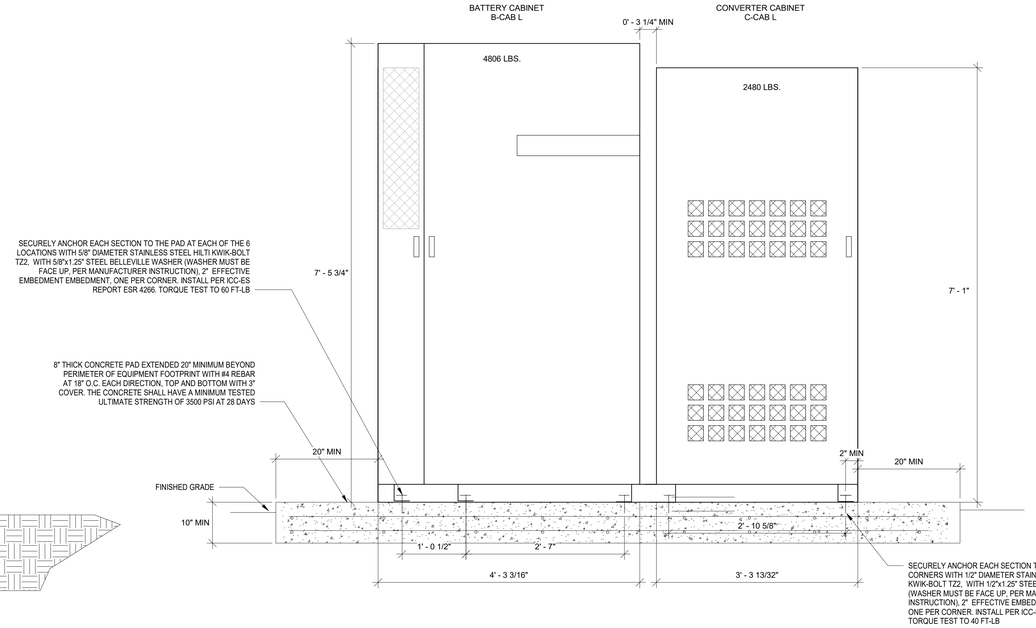

REFER TO DETAIL 2/E601.2 FOR BATTERY ENERGY STORAGE SYSTEM CUT SHEET

BESS ELEVATION — 1" = 1'-0" — 1

IDENTIFICATION STAMP
DIV. OF THE STATE ARCHITECT
APP: 02-122821 INC: 2
REVIEWED FOR
SS ☑ FLS ☑ ACS ☑
DATE: 11/20/2025

Teter, Inc. expressly reserves its common law copyright and other property rights in these plans. This document, the ideas and designs incorporated herein, as an instrument of professional service, is not to be used in whole or part, for any other project without prior written authorization.

MARK	DATE	DESCRIPTION
A.	11/13/2025	DSA BACKCHECK

08/21/2025

TETER, INC.
ARCHITECTS ENGINEERS CONNECTED
FRESNO HEADQUARTERS
VISALIA | BAKERSFIELD | MODESTO | SAN LUIS OBISPO

VISALIA CAMPUS UNIVERSITY CENTER
COLLEGE OF THE SEQUOIAS
915 S. MOONEY BLVD
VISALIA, CA

DRAWING TITLE
ELECTRICAL DETAILS - BESS

PROJECT NO.
22-12498

DRAWING
E601.2

SUNSYS HES L

SUNSYS HES L©

Modular outdoor Energy Storage System
from 50 kVA / 186 kWh to 550 kVA / 1116 kWh systems



SUNSYS HES L is an outdoor system that merges proven individual technologies to create a more efficient all-in-one solution. Partnering with CATL, Socomec has selected the EnerOne liquid cooled LFP battery system as the optimum battery for SUNSYS Hybrid Energy Storage. SUNSYS HES L meets the most stringent safety standards.
The range is available in a variety of sizes and can work both as grid follower and grid-former.

Safety certified

The system combines 2 top quality components to deliver a winning formula.
CATL EnerOne Liquid-Cooled Battery: the SUNSYS B-Cab L uses stable Lithium Iron Phosphate (LFP) battery chemistry. The battery has passed the large-scale fire test UL9540A.
Socomec Power Conversion System (PCS): the SUNSYS C-Cab L uses a safe conversion technology to limit the common mode noise effect.
SUNSYS HES L is compliant with UL9540-2020: the latest and most stringent safety standard for Energy Storage Systems, in both Canada and the USA.

Extreme flexibility

The SUNSYS HES L system is based on 2 standard cabinets – C-Cab and B-Cab – that can be combined to make dozens of certified combinations.
In addition, the installation can be upgraded with:
- **increased power** with the addition of one or more 50 kVA power modules in the C-Cab or even additional C-Cabs,
- **increased energy** with the addition of B-Cabs.

Fast and error-free installation

Battery cabinets are shipped completely assembled with internal modules mounted - for maximum quality with the minimum transportation costs and installation time.
Also, for an error-free installation:
- **drilling plates are provided** to prepare the locations of the drillings,
- **the intelligence (PMS, BMS & EMS) is integrated** inside the C-Cab to reduce complexity,
- **DC connecting kits are available** to simplify the connection between the converters and batteries.

Easy maintenance

Reduced maintenance with HVAC replaced by air filters that can easily be maintained by the customer.
Seamless service during maintenance as one C-Cab L module can be changed without interruption whilst keeping the others operational.
Furthermore, one battery rack can be disconnected for module replacement keeping the others operational.

The solution for

- Commercial and industrial buildings
- EV charging infrastructure
- Isolated microgrids
- Resilient microgrids
- Renewable energy integration: Solar and Storage

Strong points

- Safety certified
- Extreme flexibility
- Fast and error-free installation
- Easy maintenance
- Maximum savings and fast ROI

Conformity to standards

- **Safety:** UL 9540-2020; UL 9540A
- **EMC:** FCC part 15 Level A
- **Environment:** RoHS; REACH
- **Communication protocol:** Modbus TCP; SunSpec 2.0
- **Grid code:** UL 1741 SA/SB; UL 1741 CRD; IEEE 1547-2018; IEEE 1547.1-2020; CA Rule 21

Please consult us for additional ones.

Multi-MWh systems

- For larger installations, please consider our larger energy storage range, SUNSYS HES XL range

Expert Services

Socomec Expert Services teams in North America provide:
- Extended warranties, for up to 20 Years
- Scheduled preventive maintenance for warranty compliance
- On-site startup and commissioning
- Prompt service response in the unlikely event unscheduled service may be required



SUNSYS HES L©
Modular outdoor Energy Storage System
from 50 kVA / 186 kWh to 550 kVA / 1116 kWh systems

Ease of operation & maximum savings

Energy toolbase EMS

Integrated inside our C-Cab, this intelligent EMS will manage your system to enable maximized savings.
This Energy Management System includes:
- **Acumen EMS:** controls software that forecasts and optimally discharge the ESS in the field.
- **ETB Monitor:** a monitoring software providing real-time insights into the operational performance and savings of your system.



Who is Energy Toolbase?

ETB is backed by Pason Systems, a highly reputable, bankable, 40 year-old company.
Their team and suite of products takes you through every step of a project's lifecycle – from project conception to end of life

Suitable for all of the following applications

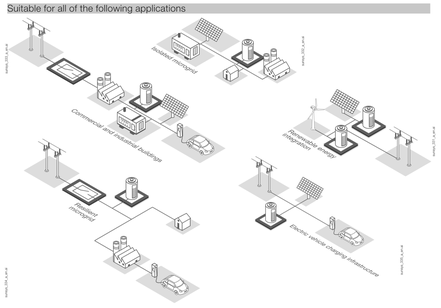

SUNSYS HES L©
Modular outdoor Energy Storage System
from 50 kVA / 186 kWh to 550 kVA / 1116 kWh systems

2 modular units for maximum flexibility



C-Cab

- Bidirectional power converter
- 50 to 300 kVA / cabinet
- Automation functions
- AC/DC distribution and protection
- Battery management system
- Integrated EMS
- IoT Ready

B-Cab

- Lithium ion battery
- LFP technology
- 186 kWh / rack
- Liquid cooling thermal management
- Integrated fire safety detection and extinction system

Many system configurations are available to meet customer requirements

Power (kVA)	Energy (kWh) 1 B-Cab 186	2 B-Cab 372	3 B-Cab 558	4 B-Cab 744	5 B-Cab 930	6 B-Cab 1116
50						
100						
150						
200						
250						
300						
350						
400						
450						
500						
550						

Popular Configurations, featured in ETB Developer. Available configurations.

SPECIFIED CONFIGURATION
50KW/186KWH

SUNSYS HES L©
Modular outdoor Energy Storage System
from 50 kVA / 186 kWh to 550 kVA / 1116 kWh systems

Technical Data

System information						
Power modularity	50 kVA power modules - up to 300 kVA per cabinet					
Symmetrical overload	110% during 30 min - 125% during 10 min - 150% during 30 s					
Chemistry	LFP - Lithium Iron Phosphate					
Energy Nameplate	186 kWh per cabinet					
AC/AC Max Round Trip Efficiency	90%					
Maximum C-rate	0.5 C					
Maximum DC current	82 A charging / 87 A discharging per 50 kVA power module					
Power rating	50 kW	100 kW	150 kW	200 kW	250 kW	300 kW
AC rated current	60 A	120 A	180 A	241 A	301 A	361 A
AC max. temporary current (overload)	90 A	180 A	271 A	361 A	451 A	541 A
AC connections	Up to 4 x 95 mm²/3/0AWG - 3 x 150 mm²/300MCM - 2 x 185 mm²/350MCM					
Rated voltage (Un)	480 Vac (3ph+N) ±20%					
Rated frequency	60 Hz ±5%					
Fire protection	Fire Safety System including smoke detectors, heat detectors and aerosol					
Environment						
Degree of protection	IP 55 / NEMA 3R (Outdoor)					
Operation temperature	-20 to +45 C° / -4 to +113°F without derating					
Storage temperature	-20 to +60 C° / -4 to +140°F					
Acoustic level at 1 m	< 64.8 dB					
Maximum altitude	1000 m / 3280 ft. without derating (consult us for requirements above this)					

Two system installation options according to the space available on your site

On-line installation
Up to 6 B-Cabs - dimensions (mm/in)

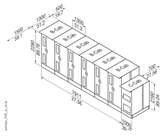
1000 39.37
1200 47.24
600 23.62
1200 47.24
1200 47.24
1200 47.24

UL SYSTEM NO. W-L-1001
JUNE 15, 2005
F-RATINGS - 1, 2, 3, AND 4 HR (SEE ITEMS 2 AND 3)
T-RATING - 0, 1, 2, 3, AND 4 HR (SEE ITEM 3)
L- RATING AT AMBIENT - LESS THAN 1 CFM/SQ FT
L-RATING AT 400 F - LESS THAN 1 CFM / SQ FT

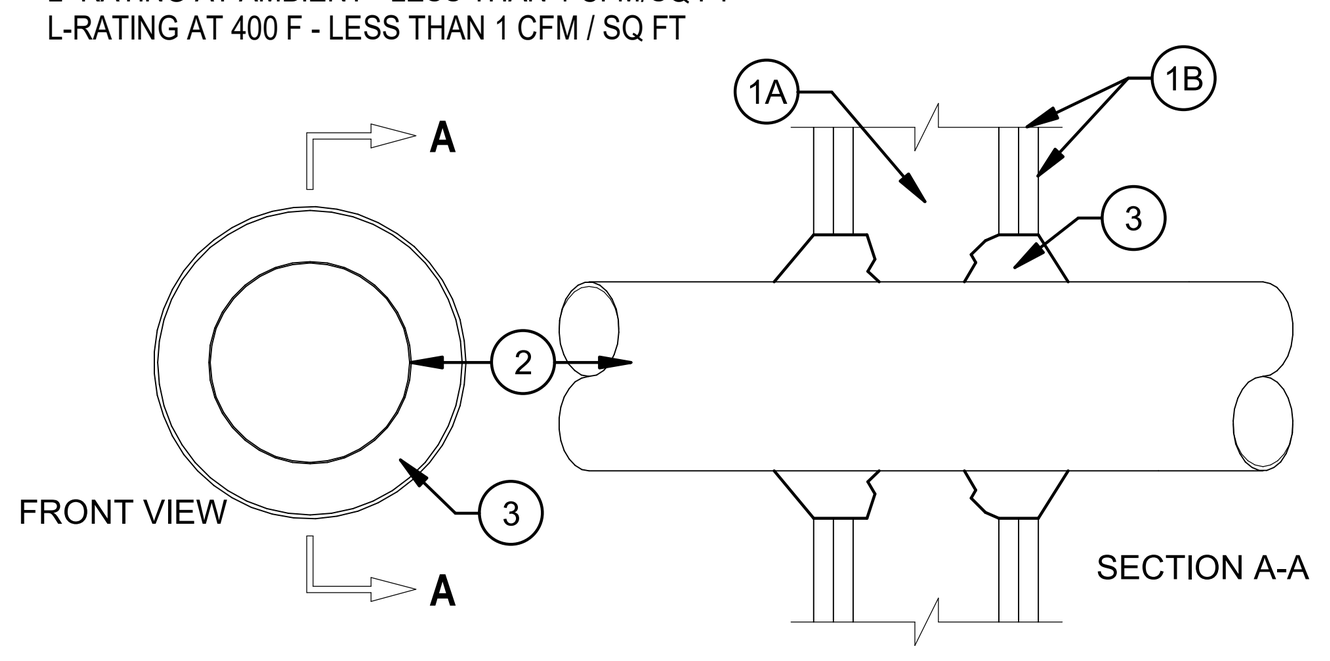

1. WALL ASSEMBLY - THE 1, 2, 3, OR 4 HR FIRE-RATED GYP. WALLBOARD/STUD WALL ASSEMBLY SHALL BE CONSTRUCTED OF THE MATERIALS & IN THE MANNER SPECIFIED IN THE INDIVIDUAL U300 OR U400 SERIES WALL & PARTITION DESIGNS IN THE UL FIRE RESISTANCE DIRECTORY & SHALL INCLUDE THE FOLLOWING CONSTRUCTION FEATURES:
   A. STUDS - WALL FRAMING MAY CONSIST OF EITHER WOOD STUDS (MAX 2HR FIRE RATED ASSEMBLIES) OR STEEL CHANNEL STUDS. WOOD STUDS TO CONSIST OF NOM 2 BY 4 IN. LUMBER SPACED 16" OC. WITH NOM 2 BY 4 IN. LUMBER END PLATES AND CROSS BRACES. STEEL STUDS TO BE MIN 3-5/8 IN. WIDE BY 1-3/8 IN. DEEP CHANNELS SPACED MAX 24" OC.
   B. WALLBOARD, GYPSUM* - NOM 1/2 OR 5/8 IN. THK. 4 FT WIDE WITH SQUARES OR TAPERED EDGES. THE GYP. WALLBOARD TYPE, THICKNESS, NO. OF LAYERS, FASTENER TYPE AND SHEET ORIENTATION SHALL BE AS SPECIFIED IN THE INDIVIDUAL U300 OR U400 SERIES DESIGN IN THE UL FIRE RESISTANCE DIRECTORY MAX. DIAM OF OPENING IS 26 IN.
2. THROUGH PENETRANT - ONE METALLIC PIPE, CONDUIT OR TUBING INSTALLED EITHER CONCENTRICALLY OR ECCENTRICALLY WITHIN THE FIRESTOP SYSTEM. THE ANNULAR SPACE BETWEEN PIPE, CONDUIT OR TUBING AND PERIPHERY OF OPENING SHALL BE MIN. OF 0 IN. (POINT CONTACT) TO MAX. 2 IN. PIPE, CONDUIT OR TUBING TO BE RIGIDLY SUPPORTED ON BOTH SIDES OF WALL ASSEMBLY. THE FOLLOWING TYPES AND SIZES OF METALLIC PIPES, CONDUITS OR TUBING MAY BE USED:
   A. STEEL PIPE - NOM. 24 IN. DIAM. (OR SMALLER) SCH. 10 (OR HEAVIER) STEEL PIPE.
   B. IRON PIPE - NOM. 24 IN. DIAM. (OR SMALLER) SERVICE WEIGHT (OR HEAVIER) CAST IRON SOIL PIPE, NOM. 12 IN. DIAM. (OR SMALLER) OR CLASS 50 (OR HEAVIER) DUCTILE IRON PRESSURE PIPE.
   C. CONDUIT - NOM. 6 IN. DIAM. (OR SMALLER) STEEL CONDUIT OR NOM. 4 IN. DIAM. (OR SMALLER) STEEL EMT.
   D. COPPER TUBING - NOM. 6 IN. DIAM. (OR SMALLER) TYPE L (OR HEAVIER) COPPER TUBING.
   E. COPPER PIPE - NOM. 6 IN. DIAM. (OR SMALLER) REGULAR (OR HEAVIER) COPPER PIPE.
   F. THROUGH PENETRATING PRODUCT* - FLEXIBLE METAL PIPING - THE FOLLOWING TYPES OF STEEL FLEXIBLE METAL GAS PIPING MAY BE USED:
      F.1. NOM. 2 IN. DIAM. (OR SMALLER) STEEL FLEXIBLE METAL GAS PIPING. PLASTIC COVERING ON PIPING MAY OR MAY NOT BE REMOVED ON BOTH SIDES OF FLOOR OR WALL ASSEMBLY. OMEGA FLEX INC.
      F.2. NOM. 1 IN. DIAM. (OR SMALLER) STEEL FLEXIBLE METAL GAS PIPING. PLASTIC COVERING ON PIPING MAY OR MAY NOT BE REMOVED ON BOTH SIDES OF FLOOR OR WALL ASSEMBLY. TITEFLEX CORP. A BUNDY CO.
      F.3. NOM. 1 IN. DIAM. (OR SMALLER) STEEL FLEXIBLE METAL GAS PIPING. PLASTIC COVERING ON PIPING MAY OR MAY NOT BE REMOVED ON BOTH SIDES OF FLOOR OR WALL ASSEMBLY. WARD MFG. INC.
3. FILL, VOID OR CAVITY MATERIAL* - CAULK OR SEALANT - MIN. 5/8. 1-1/4, 1-7/8, AND 2-1/2 IN.THICKNESS OF CAULK FOR 1, 2, 3, AND 4 HR RATED ASSEMBLIES, RESPECTIVELY, APPLIED WITH ANNULUS, FLUSH WITH BOTH SURFACES OF WALL. MIN 1/4 IN. DIAM. BEAD OF CAULK APPLIED TO GYP. BOARD/ PENETRANT INTERFACE AT POINT CONTACT LOCATION ON BOTH SIDES OF WALL. THE HOURLY F RATING OF THE FIRE STOP SYSTEM IS DEPENDENT UPON THE HOURLY FIRE RATING OF THE WALL ASSEMBLY IN WHICH IT IS INSTALLED, AS SHOWN IN THE FOLLOWING TABLE. THE HOURLY T RATING OF THE FIRESTOP SYSTEM IS DEPENDENT UPON THE TYPE OR SIZE OF THE PIPE OR CONDUIT AND THE HOURLY FIRE RATING OF THE WALL ASSEMBLY IN WHICH IT IS INSTALLED, AS TABULATED BELOW:

MAXIMUM PIPE OR CONDUIT DIAM IN.	F RATING HR	T RATING HR
1	1 OR 2	0+, 1, OR 2
1	3 OR 4	3 OR 4
4	1 OR 2	0
6	3 OR 4	0
12	1 OR 2	0

+WHEN COPPER PIPING IS USED, T RATING IS 0 HR.
3M COMPANY - CP 25WB+ CAULK OR FB-3000 WT SEALANT.

*BEARING THE UL CLASSIFICATION MARKING

METALLIC CONDUIT PENETRATION
THROUGH 1,2,3, & 4-HR RATED WALLS N.T.S. 28

UL SYSTEM NO. F-C-1002
SEPTEMBER 03, 2004
(FORMALLY SYSTEM NO. 169)
F-RATINGS - 1 AND 2 HR (SEE ITEM 1)
T-RATING - 1 HR

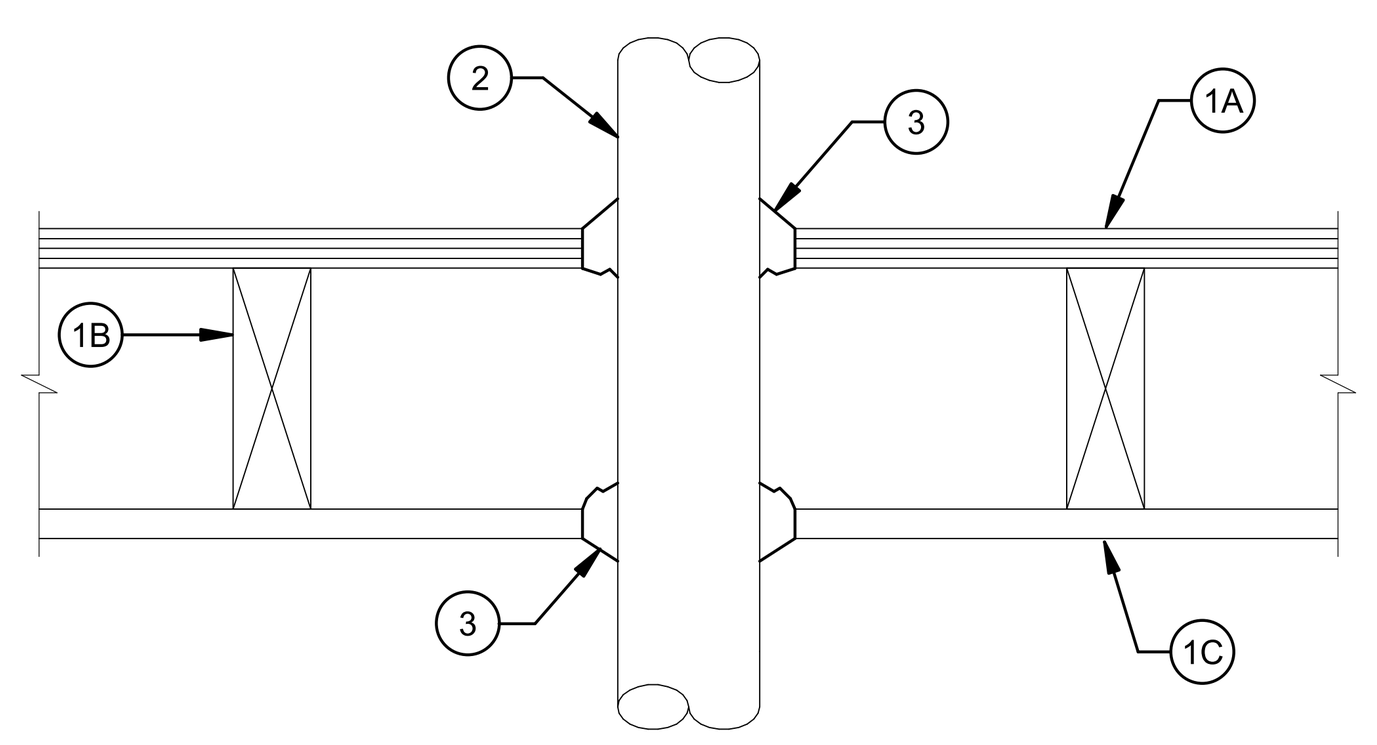

1. FLOOR-CEILING ASSEMBLY - THE 1 OR 2 HR FIRE-RATED WOOD JOIST FLOOR-CEILING ASSEMBLY SHALL BE CONSTRUCTED OF THE MATERIALS & IN THE MANNER SPECIFIED IN THE UL FIRE RESISTANCE DIRECTORY. THE 1 HR FIRE RATED ASSEMBLY SHALL BE CONSTRUCTED AS SPECIFIED IN DESIGN NO. L505, L511, 0R L536. THE F RATING OF THE FIRESTOP SYSTEM IS EQUAL TO THE FIRE RATING OF THE FLOOR-CEILING ASSEMBLY. THE GENERAL CONSTRUCTION DETAILS OF THE FLOOR-CEILING ASSEMBLY ARE SUMMARIZED BELOW:
   A. FLOORING SYSTEM - LUMBER OR PLYWOOD SUBFLOOR WITH FINISH FLOOR OF LUMBER, PLYWOOD, OR FLOOR TOPPING MIXTURE* AS SPECIFIED IN THE INDIVIDUAL FLOOR-CEILING DESIGN. MAXIUM DIAM. OF OPENING IS 1 IN. LARGER THAN OUTSIDE DIAM. OF PENETRANT.
   B. WOOD JOISTS - NOM 2 x 10 IN. LUMBER JOISTS SPACED 16 IN. O.C. WITH NOM 1 X 3 IN. LUMBER BRIDGING AND WITH ENDS FIRESTOPPED.
   C. FURRING CHANNELS (NOT SHOWN) - RESILIENT GALVANIZED STEEL FURRING CHANNELS INSTALLED PERPENDICULAR TO WOOD JOISTS BETWEEN FIRST AND SECOND LAYERS OF WALLBOARD (ITEM 1D) IN 2 HR. FIRE RATED ASSEMBLY. FURRING CHANNELS SPACED MAXIMUM 24 IN. O.C.
   D. GYPSUM BOARD* - NOM 4 FT. WIDE x 5/8 IN. THICK AS SPECIFIED IN THE INDIVIDUAL FLOOR-CEILING DESIGN. FIRST LAYER OF WALLBOARD NAILED TO WOOD JOISTS. SECOND LAYER OF WALLBOARD (2 HR. FIRE RATED ASSEMBLY ONLY) SCREW-ATTACHED TO FURRING CHANNELS. MAXIMUM DIAM. OF OPENING IS 1 IN. LARGER THAN OUTSIDE DIAM. OF PENETRANT.

1.1 CHASE WALL (OPTIONAL, NOT SHOWN) - THE THROUGH PENETRANTS (ITEM NO. 2) MAY BE ROUTED THROUGH A FIRE-RATED SINGLE, DOUBLE, OR STAGGERED WOOD STUD/GYPSUM WALLBOARD CHASE WALL HAVING A FIRE RATING CONSISTANT WITH THAT OF THE FLOOR-CEILING ASSEMBLY. THE CHASE WALL SHALL SHALL BE CONSTRUCTED OF THE MATERIALS & IN THE MANNER SPECIFIED IN THE INDIVIDUAL U300 SERIES WALL AND PARTITIONS DESIGN IN THE UL FIRE RESISTANCE DIRECTORY AND SHALL INCLUDE THE FOLLOWING CONSTRUCTION FEATURES:
   A. STUDS - NOM 2 X 6 IN. OR DOUBLE NOM 2 X 4 IN. LUMBER STUDS.
   B. SOLE PLATE - NOM 2 X 6 IN. OR PARALLEL 2 X 4 IN. LUMBER PLATES, TIGHTLY BUTTED.
   C. TOP PLATE - THE DOUBLE TOP PLATE SHALL CONSIST OF TWO NOM 2 X 6 IN. OR TWO SETS OF PARALLEL 2 X 4 IN. LUMBER PLATES, TIGHTLY BUTTED. MAXIMUM DIAM. OF OPENING IS 5 IN.
   D. GYPSUM BOARD* THICKNESS, TYPE, NUMBER OF LAYERS AND FASTENERS SHALL BE SPECIFIED IN INDIVIDUAL WALL AND PARTITION DESIGN.
2. THROUGH PENETRANTS - ONE METALLIC PIPE, CONDUIT OR TUBING TO BE INSTALLED EITHER CONCENTRICALLY OR ECCENTRICALLY WITHIN THE FIRESTOP SYSTEM. THE ANNULAR SPACE BETWEEN PIPE, CONDUIT OR TUBING AND PERIPHERY OF OPENING SHALL BE MIN. OF 0 IN. (POINT CONTACT) TO MAX. 1 IN. PIPE, CONDUIT OR TUBING TO BE RIGIDLY SUPPORTED ON BOTH SIDES OF FLOOR ASSEMBLY. THE FOLLOWING TYPES AND SIZES OF METALLIC PIPE, CONDUIT OR TUBING MAY BE USED:
   A. STEEL PIPE - NOM 10 IN. DIAM. (OR SMALLER) SCH. 40 (OR HEAVIER) STEEL PIPE.
   B. IRON PIPE - NOM 10 IN. DIAM. (OR SMALLER) CAST OR DUCTILE IRON PIPE.
   C. CONDUIT - NOM 6 IN. DIAM. (OR SMALLER) STEEL CONDUIT OR NOM 4 IN. DIAM. (OR SMALLER) STEEL ELECTRICAL METALLIC TUBING.
   D. COPPER TUBING - NOM 4 IN. DIAM. (OR SMALLER) TYPE L (OR HEAVIER) COPPER TUBING.
   E. COPPER PIPE - NOM 4 IN. DIAM. (OR SMALLER) REGULAR (OR HEAVIER) COPPER PIPE.
3. FILL, VOID OR CAVITY MATERIAL* - CAULK OR SEALANT - MIN. 3/4 IN. THICKNESS OF FILL MATERIAL, APPLIED WITH ANNULUS, FLUSH WITH TOP SURFACE OF FLOOR OR SOLE PLATE. MINIMUM 5/8 IN. OR 1-1/4 IN. THICKNESS OF FILL MATERIAL, FOR 1 AND 2 HR. RATED ASSEMBLIES, RESPECTIVELY, APPLIED WITHIN THE ANNULUS, FLUSH WITH BOTTOM SURFACE OF CEILING OR TOP PLATE. IN ADDITION MINIMUM 1/4 IN. CROWN OF FILL MATERIAL APPLIED TO PERIMETER OF PENETRANT AT ITS EGRESS FROM THE TOP SURFACE OF FLOORING AND UNDERSIDE OF CEILING OR FROM TOP OF SOLE PLATE AND UNDERSIDE OF TOP PLATE.

3M COMPANY - CP 25WB+ CAULK OR FB-3000 WT SEALANT.

*BEARING THE UL CLASSIFICATION MARKING

METALLIC CONDUIT PENETRATION
THROUGH 1-HR RATED FLOOR/CEILING N.T.S. 23

System No. W-L-3356

ANSI/UL1479 (ASTM E814)	CAN/ULC S115
F Rating - 1 or 2 Hr (See Item 1)	F Rating - 1 or 2 Hr (See Item 1)
T Ratings - 1, 1-1/2 and 2 Hr (See Item 3)	FT Ratings - 1, 1-1/2 and 2 Hr (See Item 3)
L Rating At Ambient - Less than 1 to 2.3 CFM/Device Module (See Item 2)	F Rating - 1 or 2 Hr (See Item 1)
L Rating At Ambient - Less than 1 to 2.3 CFM/Device Module (See Item 2)	FTH Ratings - 1, 1-1/2 and 2 Hr (See Item 3)
M Rating (Movement) - See Table 2	L Rating At Ambient - Less than 1 to 2.3 CFM/Device Module (See Item 2)
	L Rating At 400 F - Less than 1 to 2.3 CFM/Device Module (See Item 2)
	L Rating (Without Movement) At 204°C - Less than 0.47 to 1.1 L/s/Device Module (See Item 2)

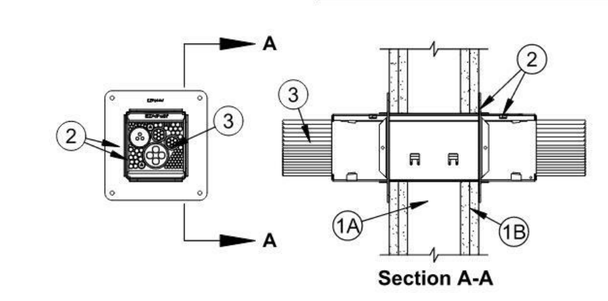

Section A-A

1. **Wall Assembly -** The 1 or 2 hr fire rated gypsum board/stud wall assembly shall be constructed of the materials and in the manner described within the individual U300, V300, U400, V400 or W400 Series Wall or Partition Designs in the UL Fire Resistance Directory and shall incorporate the following construction features:
   A. **Studs -** Wall framing shall consist of either wood studs or steel channel studs. Wood studs to consist of nom 2 by 4 in. (51 by 102 mm) lumber spaced max 16 in. (406 mm) OC. Steel studs to be min 3-1/2 in. (89 mm) wide and spaced max 24 in. (610 mm) OC.
   B. **Gypsum Board* -** Thickness, type, number of layers and fasteners as specified in the individual Wall and Partition Design. Opening in wall to be 6 in. (152 mm) diam or max 4-1/8 in. (105 mm) by 4-3/4 in. (121 mm).
   The hourly F and FH Ratings are dependent upon the hourly rating of the wall in which it is installed.
2. **Firestop Device* -** The firestop device module consists of a 4 by 4-5/8 by 14 in. (102 by 118 by 356 mm) long galv steel tube with an intumescent material lining. Firestop device module to be installed in accordance with the accompanying installation instructions. The space between the firestop device and the periphery of the opening shall be min 0 in. (0 mm, point contact) to max 1/4 in. (6 mm). Firestop device module secured in place by means of steel wall plates installed with gasketing material supplied with product. Steel wall plates installed on both sides of wall and secured to each device by means of steel screws provided with device. Firestop device module is to be installed with ends projecting an equal distance beyond each surface of the wall assembly. The L Ratings vary according to whether the device module is blank (no cables) or loaded (with cables) and which cable type and size is used, as tabulated in Table 1 below:

Table 1

Device	Cable Type	L-Rating (CFM) Ambient	L-Rating (CFM) 400 °F
0%	-	Less Than 1 (0.47)	Less Than 1 (0.47)
1-25%	4A-4I	1.5 (0.71)	1.5 (0.71)
26-50%	4A-4I	2.3 (1.1)	2.3 (1.1)
51-75%	4A-4I	2.3 (1.1)	2.3 (1.1)
76-100%	4A-4I	2.3 (1.1)	2.3 (1.1)

SPECIFIED TECHNOLOGIES INC - EZ PATH Series 44+ Fire Rated Pathway

2A. **Firestop Device* - Extension Module -** (Optional, Not Shown) - Module attached to ends of firestop device (Item 2) to increase its length to facilitate installation in thicker walls. Each module consists of a 4 by 4-5/8 by 6 in. (102 by 118 by 152 mm) long galv steel tube with an intumescent material lining. Extension module to be installed in accordance with the accompanying installation instructions. When module is used, firestop device (Item 2) and extension module secured in place by means of steel plates installed with gasketing material supplied with product. Steel plates installed on both sides of wall and secured to each device or extension module by means of steel set screws provided with plates. Firestop device and extension module assembly to be installed with ends projecting an equal distance beyond each surface of the wall assembly.
SPECIFIED TECHNOLOGIES INC - EZ PATH Series 44+ Extension

The M Rating for the firestop system is dependent on the variables as noted in Table 2 below:

Table 2

Movement Direction	Nominal Penetrant Diameter	Device Size	Movement
Y	Max 1 in. (25 mm) bundle	4 by 4-5/8 in. (102 by 118 mm)	100%**
Z	Max 1 in. (25 mm) bundle	4 by 4-5/8 in. (102 by 118 mm)	3.21 in. (81.5 mm)

** Percentage movement based on the minimum distance between penetrant OD and device ID.

3. **Cables -** Cables may represent a 0 to max 100 percent visual fill within the loading area for the firestop device module. Cables to be rigidly supported on both sides of the wall assembly. Any combination of the following types of cables may be used:
   A. Max 400 pair No. 24 AWG (or smaller) copper conductor telecommunication cable with polyvinyl chloride (PVC) or plenum-rated jacketing and insulation.
   B. Max 750 kcmil single copper conductor power cable with XLPE jacket and insulation
   C. Max 7/C No. 12 AWG copper conductor control cable with PVC or XLPE jacket and insulation.
   D. Max 3/C No. 2/0 AWG metal clad or armored cable with steel or aluminum jacket.
   E. Max 3/C No. 8 AWG NM cable (Romex) with PVC insulation and jacket.
   F. Max four pair No. 22 AWG (or smaller) copper conductor data cable with PVC or plenum rated jacketing and insulation.
   G. Coaxial cable with fluorinated ethylene or PVC insulation and jacketing having a max diam of 5/8 in. (16 mm).
   H. Optical fiber cable with PVC or polyethylene (PE) jacket and insulation and having a max diam of 5/8 in. (16 mm).
   I. Max RG6/U coaxial cable with fluorinated ethylene, polyethylene (PE), PVC or plenum rated jacketing and insulation.
   When Item 3A, 3B, 3C, 3D, 3E or 3I is used, the T, FT and FTH Ratings are 1 Hr. When Item 3F or 3G is used, the T, FT and FTH Ratings are 1 and 1-1/2 Hr for 1 and 2 Hr rated assemblies respectively. When Item 3H is used, the T, FT and FTH Ratings are 1 and 2 Hr for 1 and 2 Hr rated assemblies respectively. When device is empty, the T, FT and FTH Ratings are 1 and 1-1/2 Hr for 1 and 2 Hr rated assemblies respectively.
   +Bearing the UL Listing Mark
   *** Indicates such products shall bear the UL or cUL Certification Mark for jurisdictions employing the UL or cUL Certification (such as Canad**

METALLIC SLEEVE PENETRATION
THROUGH 1,2,3, & 4-HR RATED WALLS N.T.S. 18

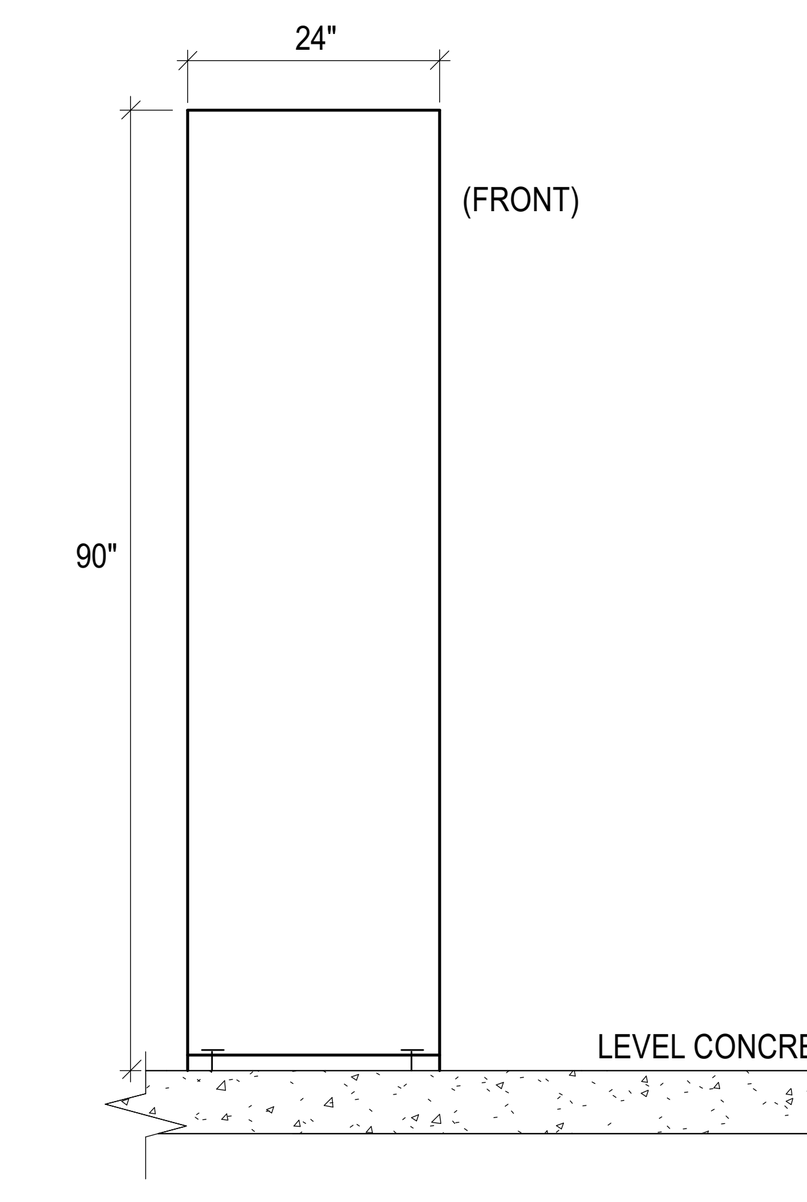

CONNECT ALL SECTIONS TOGETHER WITH 3/8" DIAMETER BOLTS AT TOP, BOTTOM, FRONT AND REAR OF EACH SECTION PER THE MANUFACTURER'S INSTRUCTIONS

SECURELY ANCHOR EACH SECTION TO THE PAD AT ALL CORNERS WITH 1/2" DIAMETER STAINLESS STEEL HILTI KWIK-BOLT TZ2, WITH 1/2"x1.25" STEEL BELLEVILLE WASHER (WASHER MUST BE FACE UP, PER MANUFACTURER INSTRUCTION), 2" EFFECTIVE EMBEDMENT, ONE PER CORNER. INSTALL PER ICC-ES REPORT ESR 4266. TORQUE TEST TO 40 FT-LB

6" THICK CONCRETE SLAB WITH #4 REBAR AT 18" O.C. EACH DIRECTION, CENTERED IN THE CONCRETE SLAB. THE CONCRETE SHALL HAVE A MINIMUM TESTED ULTIMATE COMPRESSIVE STRENGTH OF 3500 PSI AT 28 DAYS

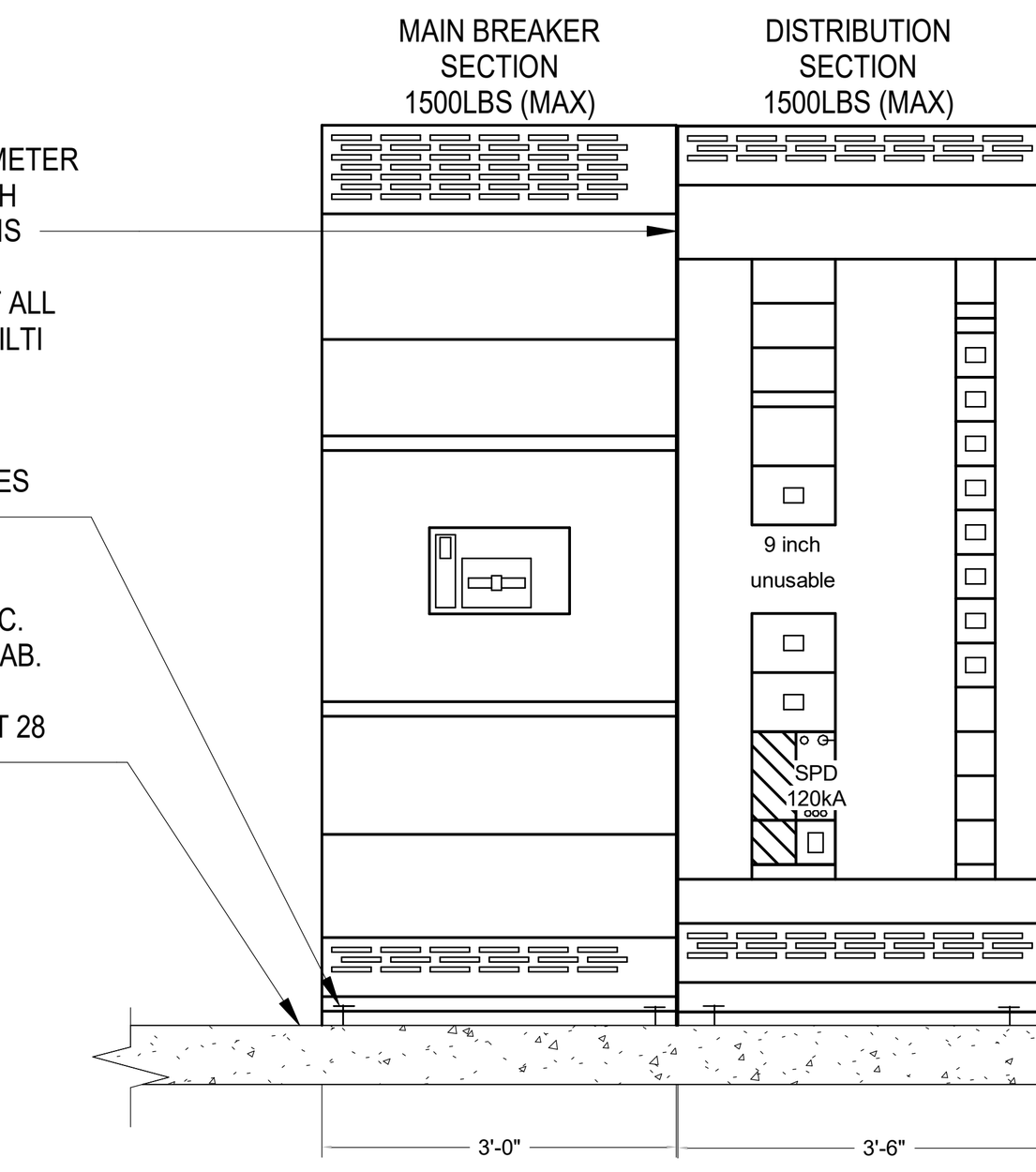

FURNISH AND INSTALL ALL OF THE FOLLOWING GROUNDING ELECTRODES WITHIN THE CONCRETE PAD AT SWITCHBOARD 'DPH':
1. A CONCRETE-ENCASED ELECTRODE CONSISTING OF AT LEAST 20-FT OF BARE # 3/0 COPPER CONDUCTOR AND BONDED TO THE SERVICE ENTRANCE EQUIPMENT GROUNDING BUS.
2. A 3/4"-DIAMETER x 10-FT LENGTH, COPPER-CLAD STEEL GROUNDING ROD.
3. CONNECTION TO U.G. METAL WATER PIPE

SWITCHBOARD 'DPH' ELEVATION N.T.S. 1

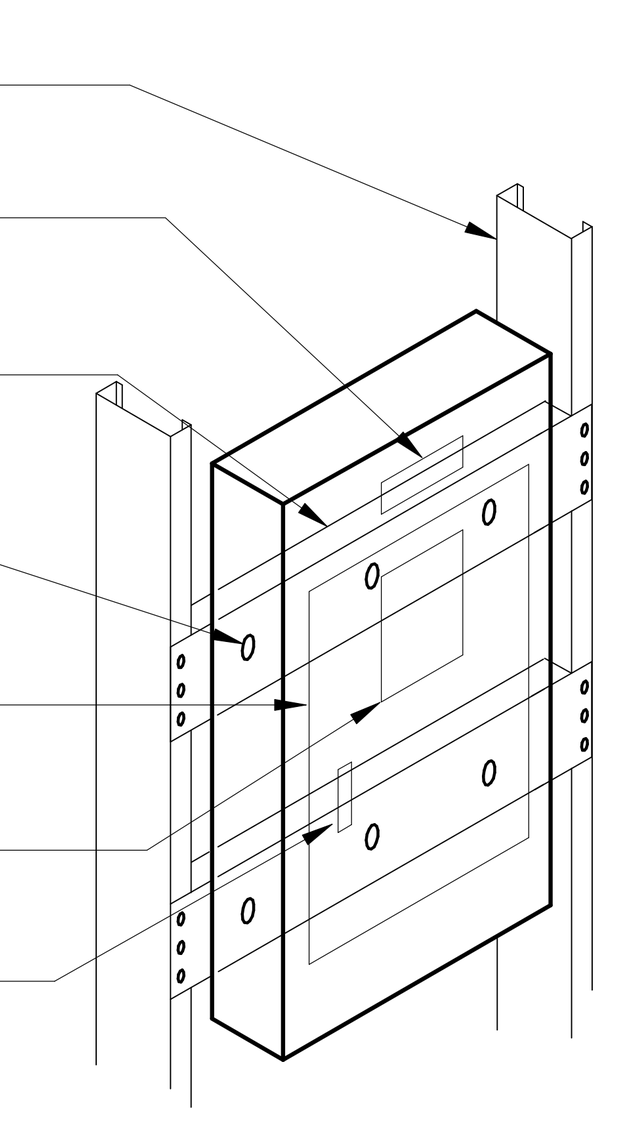

SURFACE PANEL MOUNTING N.T.S. 12

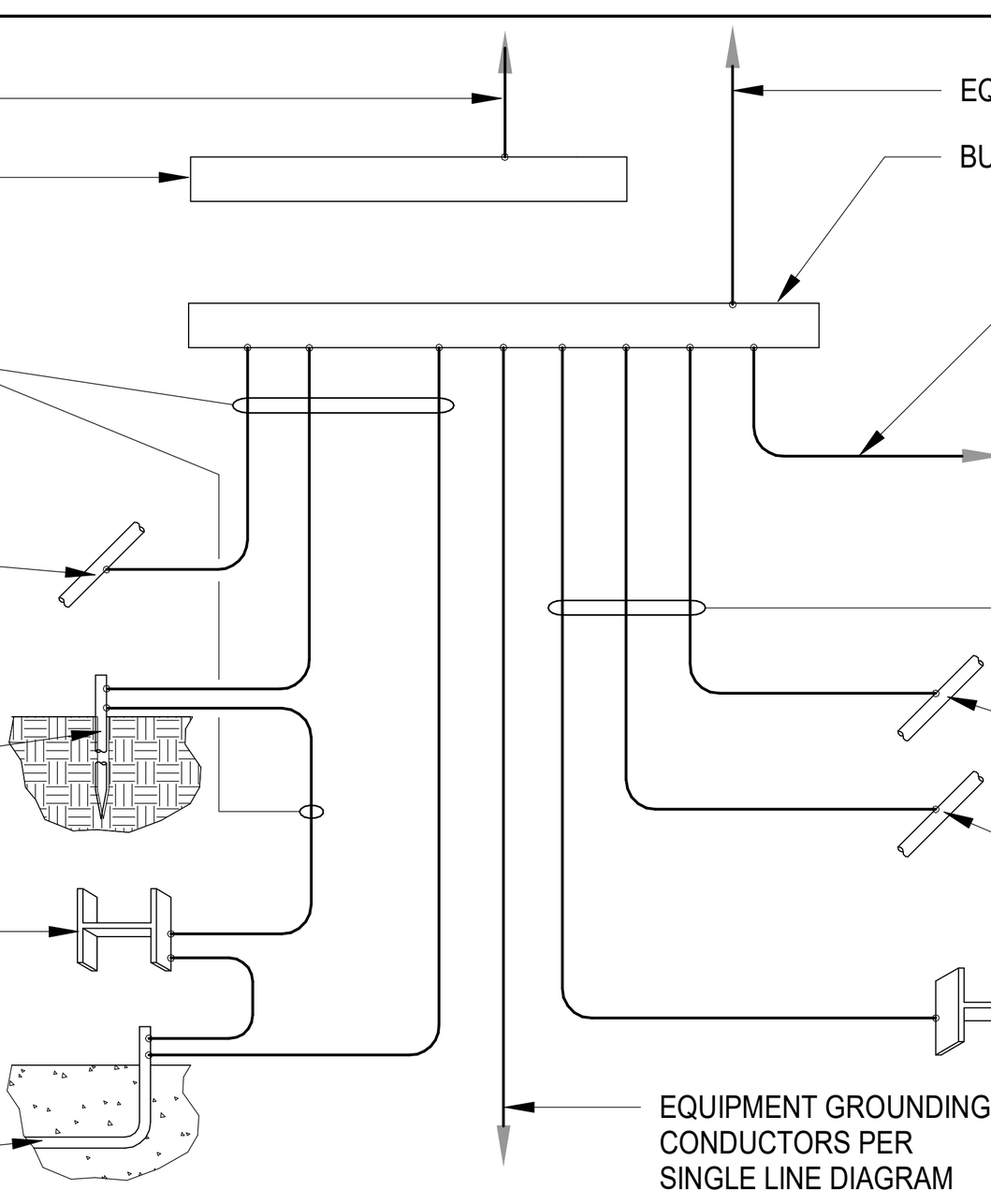

REMOTE BUILDING GROUNDING ELECTRODE SYSTEM N.T.S. 2

NOTE:
REFER TO TRANSFORMER SCHEDULE ON DRAWING E800.2 FOR WEIGHTS AND DIMENSIONS OF EACH TRANSFORMER

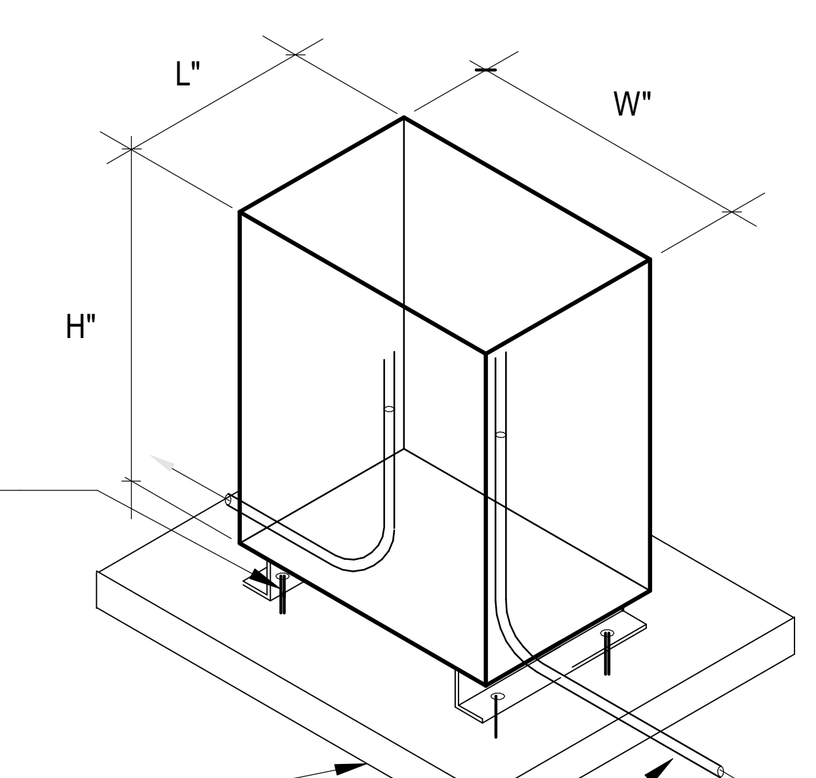

PAD MOUNTED TRANSFORMER N.T.S. 13

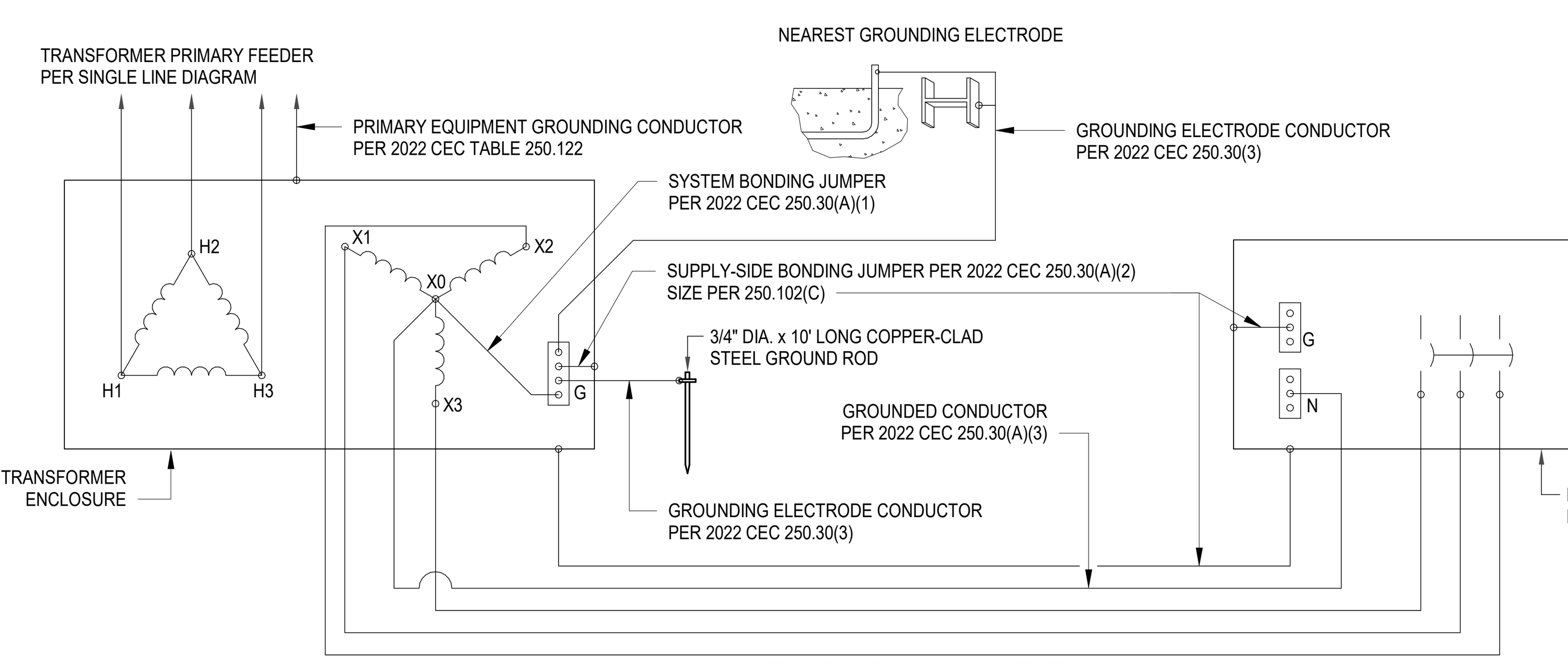

TRANSFORMER GROUNDING ELECTRODE SYSTEM N.T.S. 3

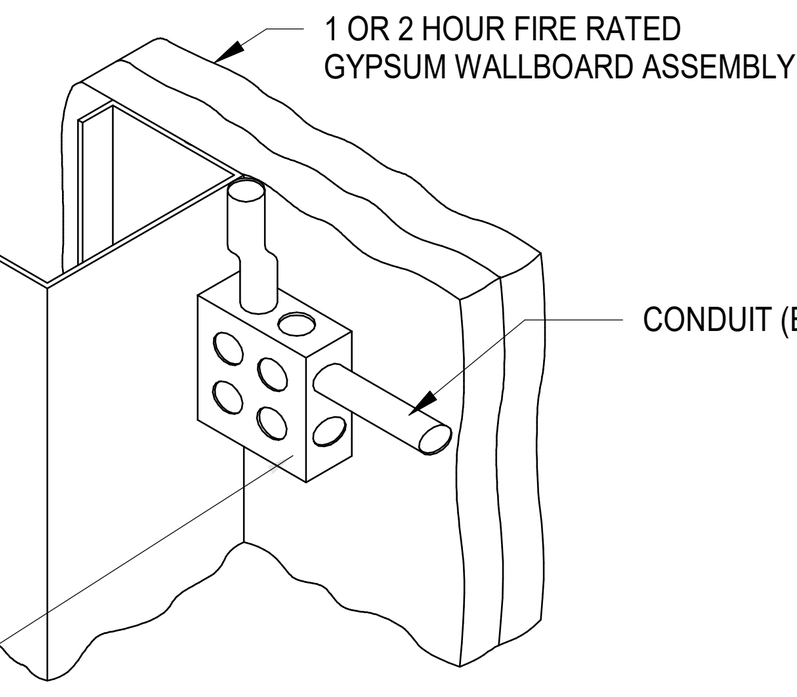

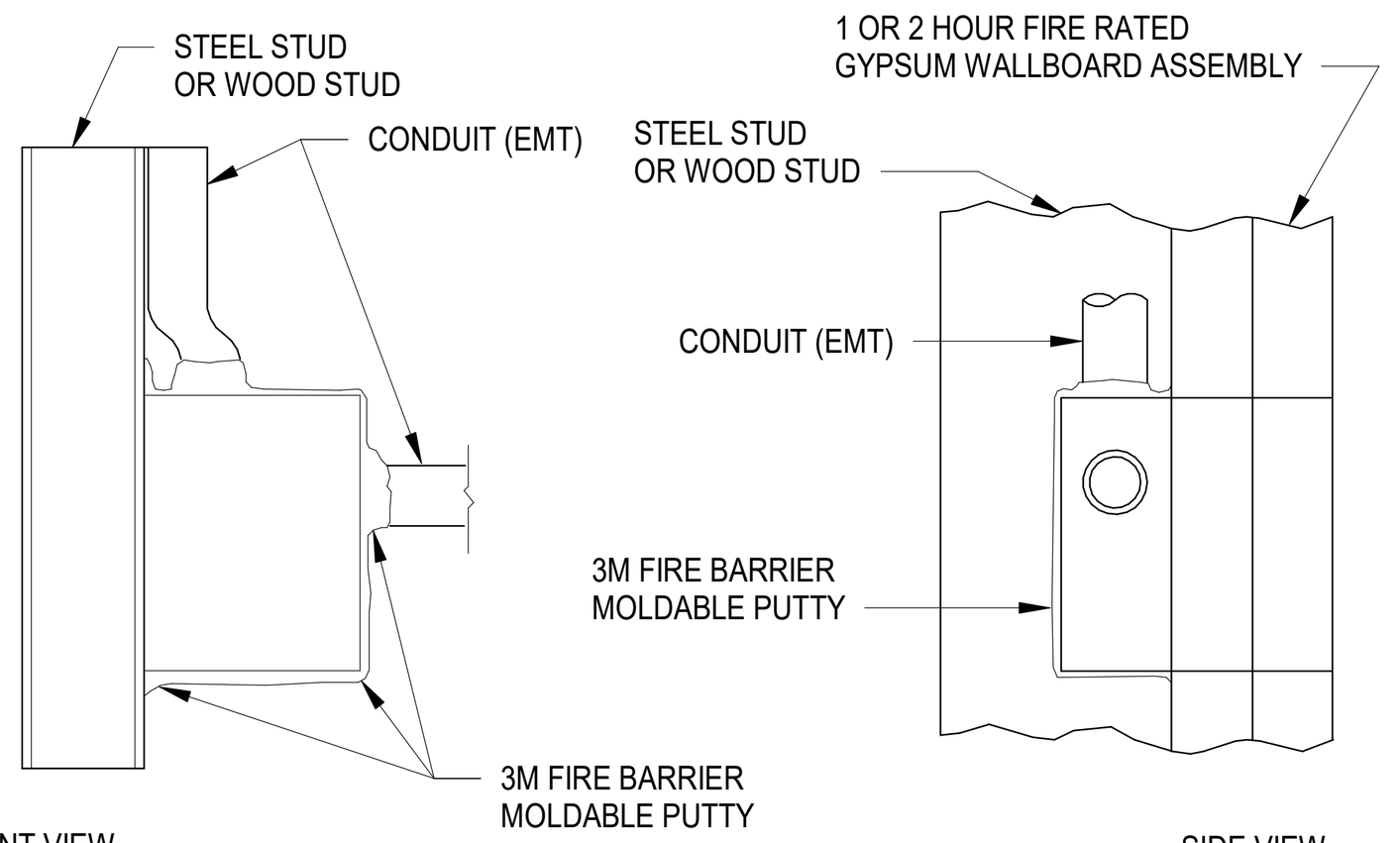

SYSTEM DETAILS

1. DRAWING NO.: 5300-ICG85.01. UL TEST REPORT NO. R9700.89NK19575
2. SYSTEM JUSTIFICATION: UL TEST REPORT R9700, 89NK19575 (11/9/89) AND R9700, 91NK21798 (10/10/91). TESTS CONDUCTED IN ACCORDANCE WITH THE STANDARD, FIRE TESTS OF BUILDING CONSTRUCTION AND MATERIALS, ANSI/ UL 263 (ASTM E 119, NFPA 251).
3. ASSEMBLY: 1 OR 2 HR. FIRE RATED GYPSUM WALLBOARD/ STUD WALL. WALL FRAMING MAY CONSIST OF EITHER WOOD STUDS OR STEEL CHANNEL STUDS - 1 HR. RATING OR STEEL CHANNEL STUDS - 2 HR. RATING.
4. RATINGS: 1 HR. OR 2 HR.
5. ITEM TO BE PROTECTED: METALLIC OUTLET BOX - UP TO 4S. NOTE: THIS APPLICATION IS INTENDED TO PREVENT FLAME THROUGH AND SMOKE PROPAGATION BY SEALING "KNOCK-OUTS" AND OPENINGS IN THE BOX/ ASSEMBLY IT ALSO INHIBITS HEAT TRANSFER TO THE NON-FIRESIDE SURFACE OF THE WALL.

APPLICATION DETAILS

1. APPLY A LAYER OF 3M FIRE BARRIER MOLDABLE PUTTY PAD TO THE METALLIC OUTLET BOX, COVERING ALL EXPOSED SURFACES. NOMINAL PUTTY THICKNESS IS 1/8 IN. (MPP1 = 4" X 8" X 1/8", MPP - 4S = 6" X 7" X 1/8")
2. PRESS THE PUTTY INTO THE INTERFACE PERIMETER OF THE OUTLET BOX AND THE STUD AND ALSO THE INTERFACE OF THE OUTLET BOX AND THE GYPSUM WALL-BOARD.
3. SEAL ANY "KNOCK-OUT" HOLE CONTAINING WIRE OR CONDUIT WITH A GENEROUS

MEMBRANE SEAL FOR METALLIC
J-BOXES IN 1-HR RATED WALLS N.T.S. 30

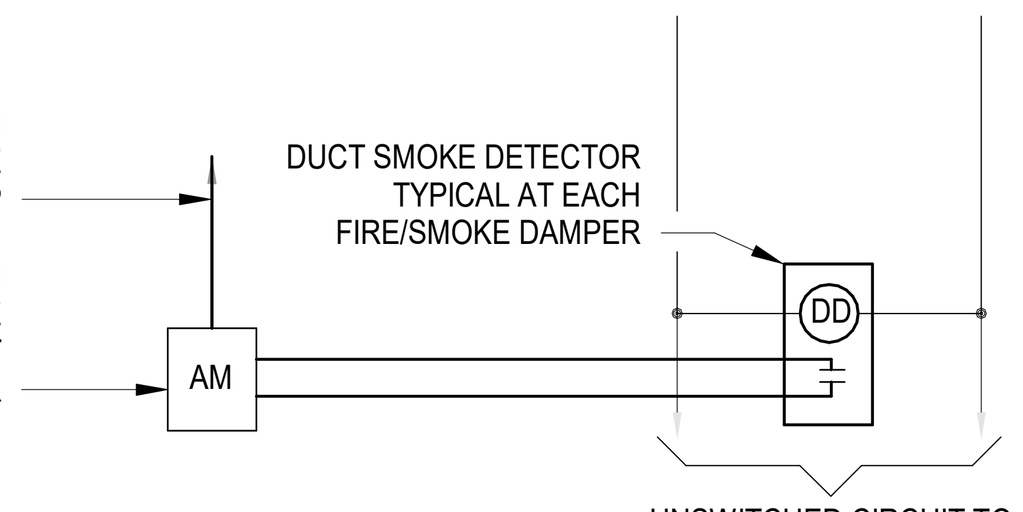

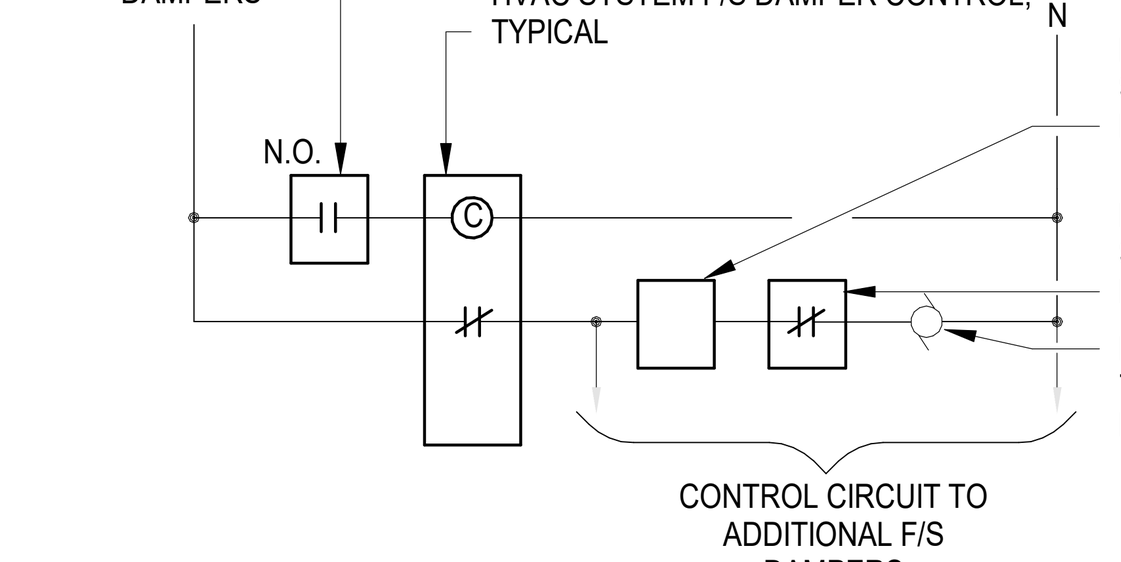

1. THE FIRE ALARM CONTROL PANEL SHALL BE PROGRAMMED SUCH THAT ACTIVATION OF A DUCT SMOKE DETECTOR WILL CAUSE ALL FIRE/SMOKE DAMPERS WITHIN THE BUILDING TO CLOSE AND WILL SHUT DOWN ASSOCIATED HVAC UNITS.
2. THE AUXILIARY CONTROL RELAY SUPPLYING POWER TO THE FIRE/SMOKE DAMPER IS DEPICTED IN THE "SYSTEM NORMAL" STATE. IN THE "SYSTEM NORMAL" STATE THE COIL IS UN-ENERGIZED AND THE CONTACT IS CLOSED. UPON ALARM THE COIL SHALL BE ENERGIZED AND THE CONTACT SHALL OPEN.

COMBINATION FIRE/SMOKE DAMPER CONTROL BY DUCT SMOKE DETECTORS N.T.S. 19

HVAC UNIT SHUTDOWN CONTROL

1. FIRE ALARM CONTROL PANEL SHALL BE PROGRAMMED SUCH THAT ACTIVATION OF 120V CONVENTIONAL DUCT SMOKE DETECTOR WILL CAUSE THE HVAC UNIT TO SHUT DOWN.
2. IF UNIT'S DUCT SYSTEM HAS FIRE/SMOKE DAMPERS, THEN FIRE ALARM CONTROL PANEL SHALL ALSO BE PROGRAMMED SUCH THAT ACTIVATION OF SMOKE DETECTORS ASSOCIATED WITH UNIT'S DUCT SYSTEM FIRE/SMOKE DAMPERS WILL CAUSE THE HVAC UNIT TO SHUT DOWN.

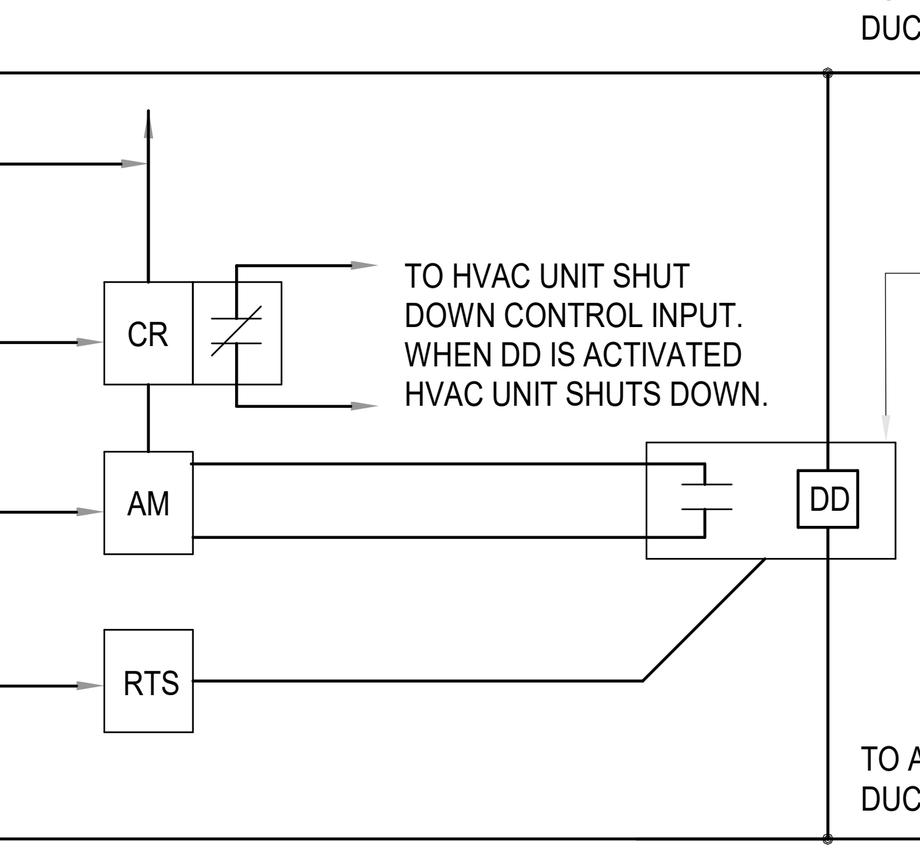

HVAC UNIT SHUTDOWN CONTROL N.T.S. 20

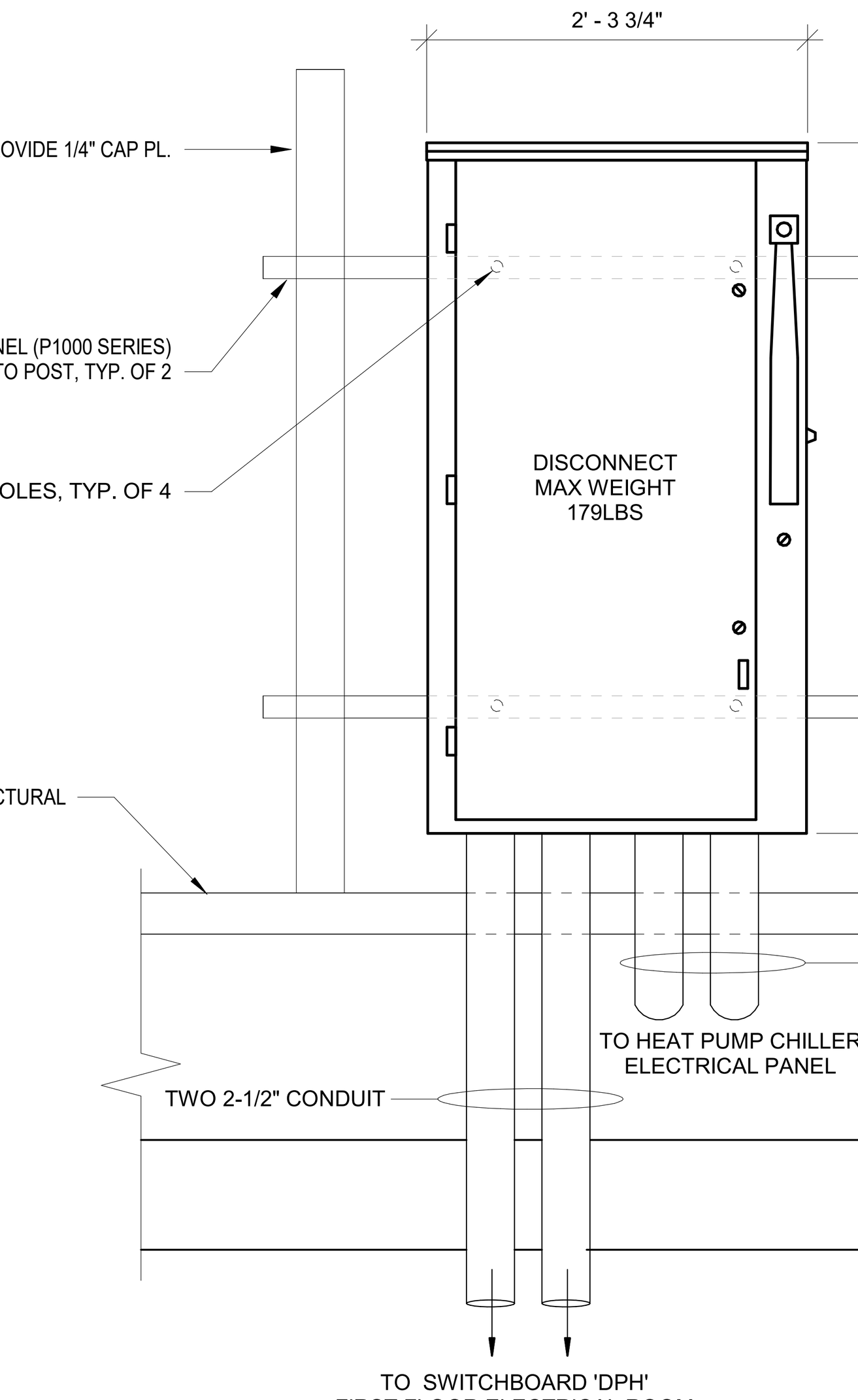

FRONT VIEW

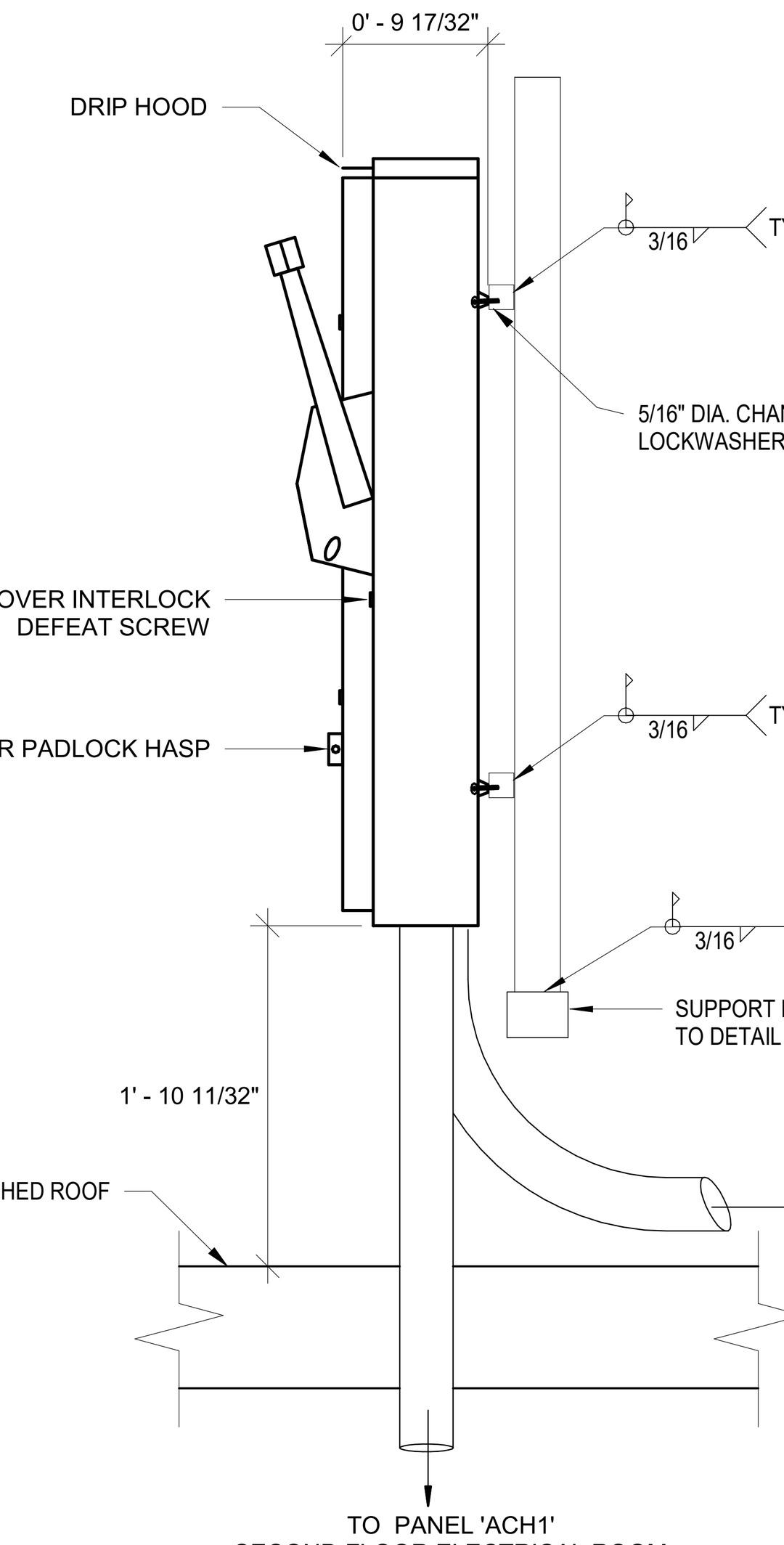

SIDE VIEW

NOTE: PAINT WELDED SURFACES W.P. GRAY

ALL NEMA 3R CONSTRUCTION

ROOF MOUNTED DISCONNECT 1" = 1'-0" 5

IDENTIFICATION STAMP
DIV. OF THE STATE ARCHITECT
APP: 02-122821 INC: 2
REVIEWED FOR
SS ☑ FLS ☑ ACS ☑
DATE: 11/20/2025

Teter, Inc. expressly reserves its common law copyright and other property rights in these plans. This document, the ideas and designs incorporated herein, as an instrument of professional service, is not to be used in whole or in part, for any other project without prior written authorization.

MARK	DATE	DESCRIPTION
A	11/13/2025	DSA BACKCHECK

REGISTERED PROFESSIONAL ENGINEER BRYAN A. GLASS No. E 17773 06-30-26 ELECTRICAL STATE OF CALIFORNIA
08/21/2025

TETER, INC.
FRESNO HEADQUARTERS
VISALIA | BAKERSFIELD | MODESTO | SAN LUIS OBISPO
ARCHITECTS ENGINEERS CONNECTED
TETER

VISALIA CAMPUS UNIVERSITY CENTER
COLLEGE OF THE SEQUOIAS
915 S. MOONEY BLVD
VISALIA, CA

DRAWING TITLE
ELECTRICAL DETAILS - BUILDING

PROJECT NO.
22-12498

DRAWING
E602.2

\\tetr-file1\Users\gene.vea_TETR\Documents\12498-E-UC_gene.vea.rvt
PLOT DATE: 9/4/2025 3:55:58 PM

\\tet-file1\Users\gene.vea_TETR\Documents\12498-E-UC_gene.vea.rvt

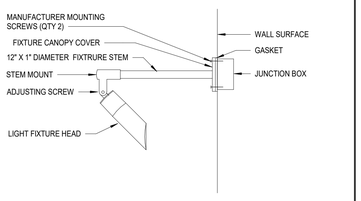

WALL MOUNTED LIGHT FIXTURE - W2 N.T.S. 21

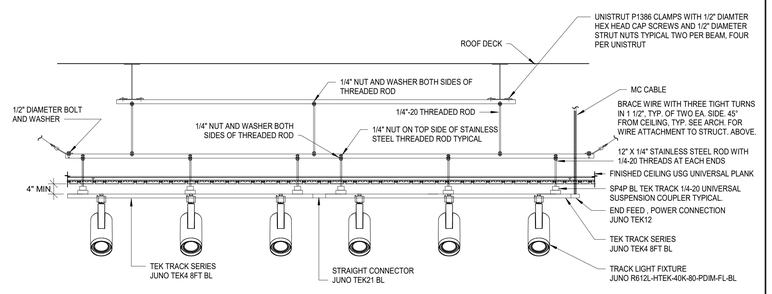

TRACK LIGHT - CEILING MOUNTED N.T.S. 16

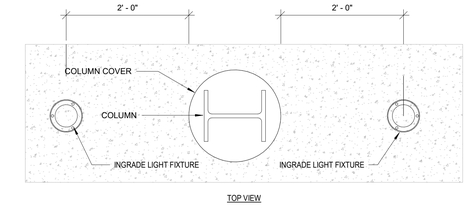

TOP VIEW

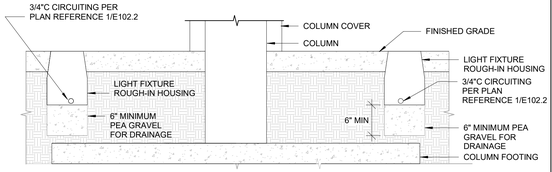

SIDE VIEW

INGRADE LIGHT FIXTURES AT COLUMN N.T.S. 2

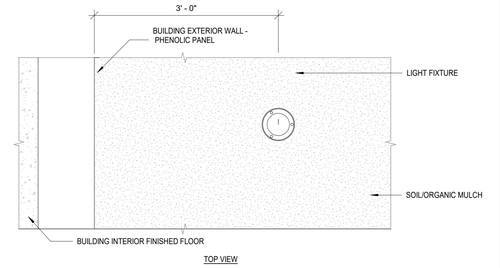

TOP VIEW

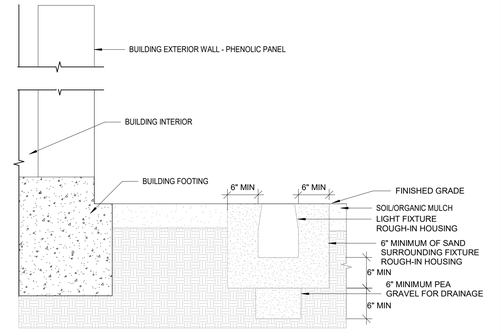

SIDE VIEW - INGRADE LIGHT FIXTURE IN ORGANIC MULCH OR SOIL

INGRADE LIGHT FIXTURE - BUILDING EXTERIOR PHENOLIC PANEL N.T.S. 1

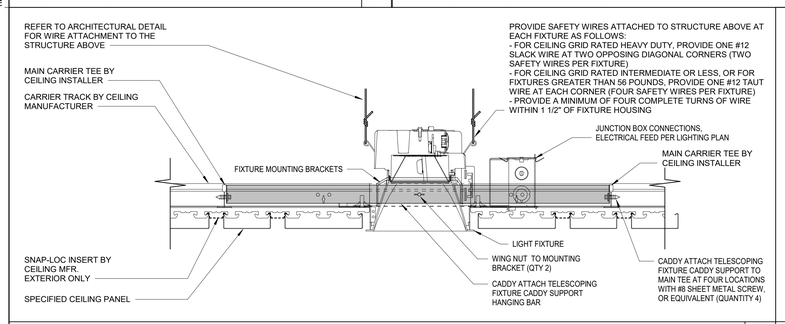

B1,B1E,B2,B2E,B3,B3E RECESSED LIGHT FIXTURE IN USG CEILING PLUS PLANX UNIVERSAL N.T.S. 11

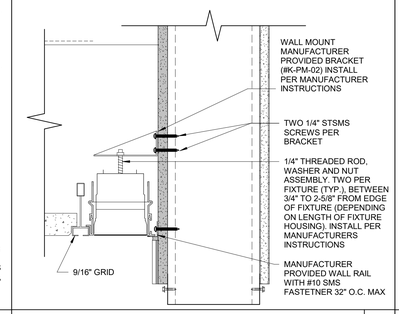

PERIMETER MOUNT LIGHT FIXTURE - T-BAR N.T.S. 17

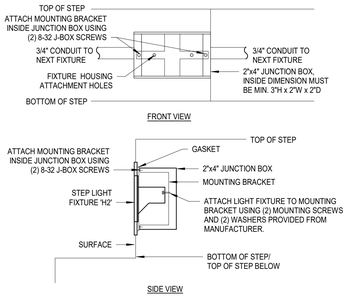

FRONT VIEW

SIDE VIEW

STEP LIGHT FIXTURE N.T.S. 13

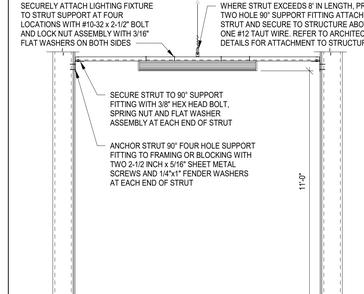

STRUT MOUNTED FIXTURE N.T.S. 8

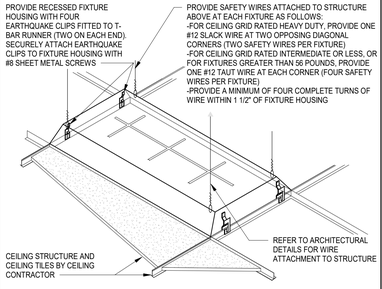

T-BAR CEILING

RECESSED FIXTURE MOUNTING N.T.S. 3

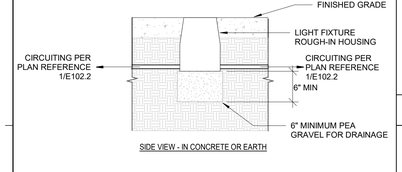

SIDE VIEW - IN CONCRETE OR EARTH

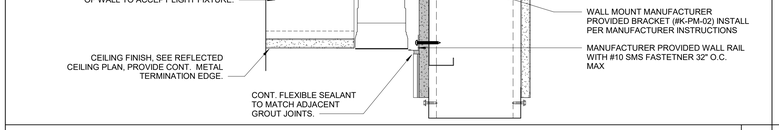

PERIMETER MOUNT LIGHT FIXTURE - GYPBOARD N.T.S. 18

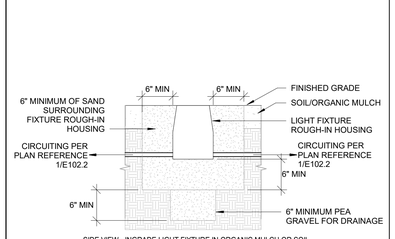

SIDE VIEW - INGRADE LIGHT FIXTURE IN ORGANIC MULCH OR SOIL

IN-GRADE LIGHT FIXTURE N.T.S. 14

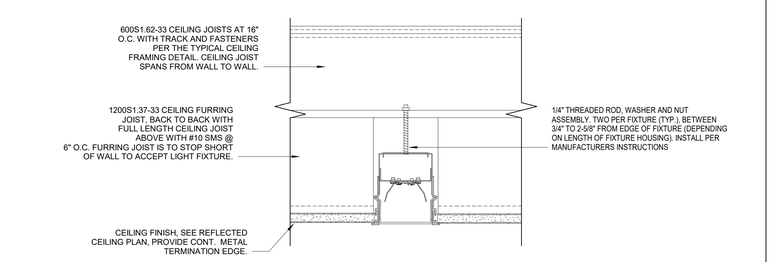

RECESSED R4 & R4E LINEAR FIXTURE IN RESTROOMS - GYPBOARD N.T.S. 19

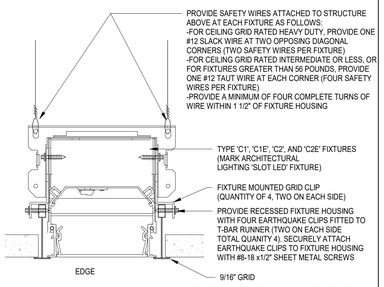

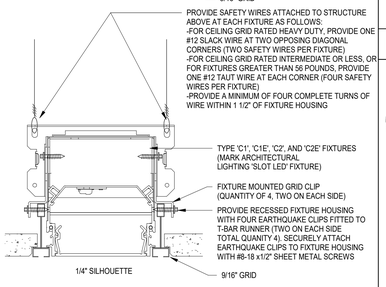

NOTE:

FIXTURE HOUSING MUST BE INSTALLED PRIOR TO CEILING BEING CLOSED. DESIGNED FOR 9/16" GRID.

RECESSED LINEAR FIXTURE - T-BAR N.T.S. 15

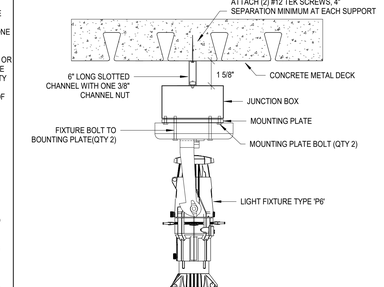

PENDENT MOUNTED FIXTURE N.T.S. 9

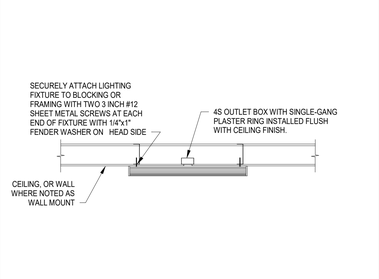

SURFACE MOUNTED FIXTURE N.T.S. 4

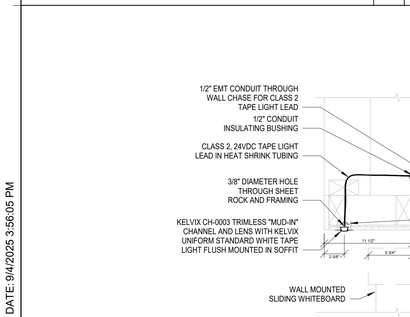

TAPE LIGHT N.T.S. 25

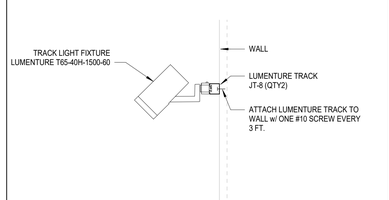

TRACK LIGHT FIXTURE - WALL MOUNTED N.T.S. 20

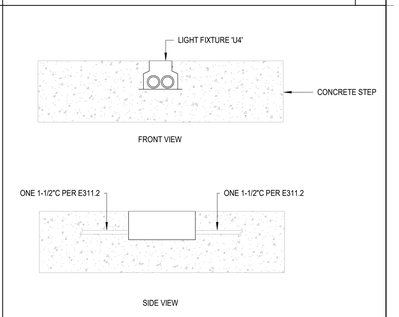

FRONT VIEW

SIDE VIEW

STEP LIGHT FIXTURE - OUTDOOR N.T.S. 10

FRONT VIEW

SIDE VIEW

INGRADE LIGHT FIXTURE N.T.S. 5

IDENTIFICATION STAMP
DIV. OF THE STATE ARCHITECT
APP: 02-122821 INC: 2
REVIEWED FOR
SS ☑ FLS ☑ ACS ☑
DATE: 11/20/2025

Teter, Inc. expressly reserves its common law copyright and other property rights in these plans. This document, the ideas and designs incorporated herein, as an instrument of professional service, is not to be used in whole or in part, for any other project without prior written authorization.

MARK	DATE	DESCRIPTION
A	11/13/2025	DSA BACKCHECK

08/21/2025

TETER, INC.
ARCHITECTS ENGINEERS CONNECTED
FRESNO HEADQUARTERS
VISALIA | BAKERSFIELD | MODESTO | SAN LUIS OBISPO

VISALIA CAMPUS UNIVERSITY CENTER
COLLEGE OF THE SEQUOIAS
915 S. MOONEY BLVD
VISALIA, CA

DRAWING TITLE
ELECTRICAL DETAILS - BUILDING LIGHTING

PROJECT NO.
22-12498

DRAWING
E603.2

PLOT DATE: 9/4/2025 3:56:05 PM

\\tet-file1\Users\gene.vea_TETR\Documents\12498-E-UC_gene.vea.rvt

IDENTIFICATION STAMP
DIV. OF THE STATE ARCHITECT
APP: 02-122821 INC: 2
REVIEWED FOR
SS ☑ FLS ☑ ACS ☑
DATE: 11/20/2025

Teter, Inc. expressly reserves its common law copyright and other property rights in these plans. This document, the ideas and designs incorporated herein, as an instrument of professional service, is not to be used in whole or part, for any other project without prior written authorization.

MARK	DATE	DESCRIPTION
A.	11/13/2025	DSA BACKCHECK

08/21/2025



TETER, INC.
FRESNO HEADQUARTERS
VISALIA | BAKERSFIELD | MODESTO | SAN LUIS OBISPO
ARCHITECTS ENGINEERS CONNECTED

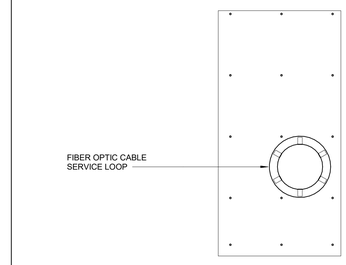

FIBER OPTIC CABLE SERVICE LOOP N.T.S. 6

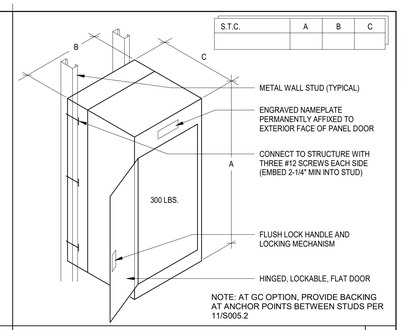

NOTE: AT GC OPTION, PROVIDE BACKING AT ANCHOR POINTS BETWEEN STUDS PER 11/S005.2

AV CABINET MOUNTING N.T.S. 1

CONDUIT TRADE SIZE	MAX. WEIGHT OF SINGLE CONDUIT WITH CONDUCTORS AT MAX. FILL
3/4" EMT	0.86 LBS./LF
1" EMT	1.3 LBS./LF
1 1/4" EMT	2.11 LBS./LF
1 1/2" EMT	2.66 LBS./LF
2" EMT	3.96 LBS./LF
2 1/2" EMT	6.49 LBS./LF
3" EMT	9.18 LBS./LF
4" EMT	14.86 LBS./LF

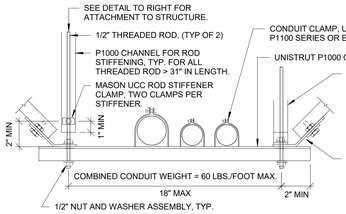

NOTES
1. CONDUIT SUPPORTS SHALL BE SPACED 10' O.C. MAX.
2. SEISMIC BRACING OF CONDUIT TRAPEZE SUPPORT IS NOT REQUIRED IF:
   A. EACH ROD HANGER IS <12" IN LENGTH FROM THE RACEWAY SUPPORT CHANNEL TO THE ATTACHMENT TO STRUCTURE.
      OR
   B. THE COMBINED WEIGHT OF THE CONDUIT AND CONDUCTORS SUPPORTED IS <0 LBS. PER LINEAR FOOT. SEE TABLE AT LEFT.

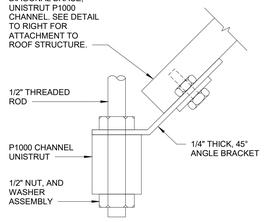

TRAPEZE DIAGONAL BRACING (LONGITUDINAL & TRANSVERSE)

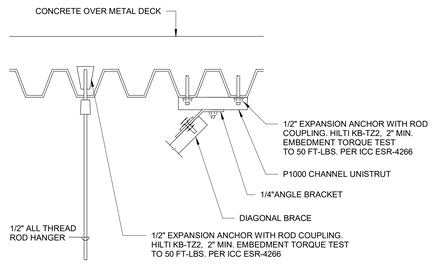

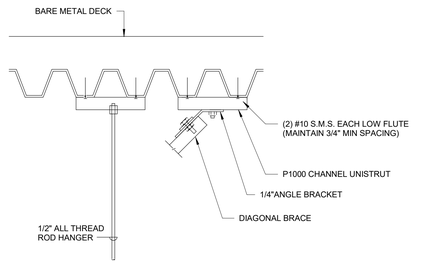

CONDUIT TRAPEZE SUPPORT N.T.S. 7

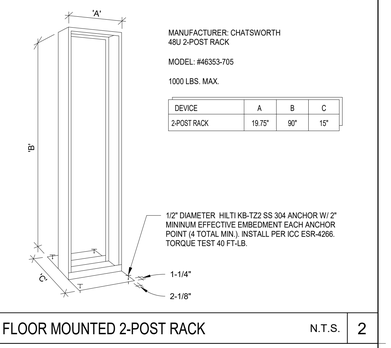

FLOOR MOUNTED 2-POST RACK N.T.S. 2

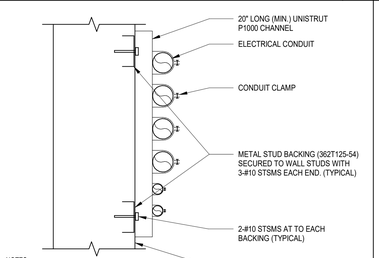

NOTES:
1. SEE PLANS FOR CONDUIT SIZES.
2. PROVIDE CONDUIT SUPPORTS NO GREATER THAN 10' ON CENTER AND WITHIN 8"-12" OF PULLCANS AND ENCLOSURES.

CONDUIT SUPPORT WALL N.T.S. 29

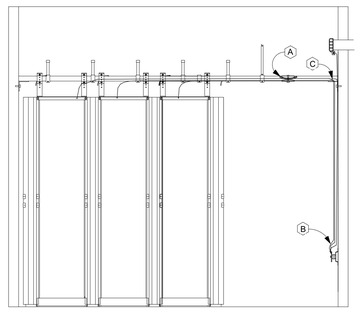

NOTES:

A. PROVIDE CABLE RUNWAY GROUND STRAP KIT FOR EACH JUNCTION OF CABLE RUNWAY.

B. GROUNDING/BONDING WITHIN THE SERVER ROOM SHALL BE ACCOMPLISHED BY ONE OF THE TWO OPTIONS BELOW:
   1) PROVIDE INDIVIDUAL HOME RUNS OF A MINIMUM OF #6 AWG GREEN INSULATED STRANDED COPPER BONDING JUMPER FROM ALL REQUIRED METALLIC OBJECTS WITHIN TR BACK TO THE TMGB.
   2) PROVIDE A CONTINUOUS LOOP AROUND THE ROOM WITH A MINIMUM OF #4 AWG GREEN INSULATED STRANDED COPPER BONDING CONDUCTOR, THEN BOND THE END OF EACH OF THE CONDUCTOR TO THE TMGB. PROVIDE IRREVERSIBLE COMPRESSION CONNECTORS TO CONNECT #6 AWG BONDING JUMPERS TO THE #4 AWG MAIN BONDING CONDUCTOR LOOPED AROUND THE TR.

C. PROVIDE IRREVERSIBLE COMPRESSION TYPE CONNECTOR/TAP TO BOND GROUNDING JUMPER TO BONDING CONDUCTOR. USE PAINT PIERCING WASHERS TO CONNECT TWO HOLE LUG OF BONDING JUMPER TO CABLE RUNWAY. (TYP)

D. BOND CONDUCTOR TO CABLE RUNWAY ON BOTH SIDES OF AN INTERSECTION.

F. PROVIDE BONDING JUMPERS. MINIMUM SIZE: #6 AWG (TYP)

TR GROUNDING N.T.S. 14

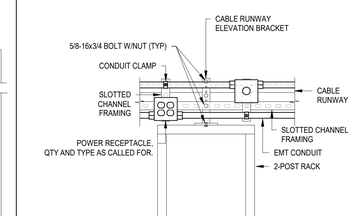

NOTES:
A. INSTALL CONDUIT AND RECEPTACLES ON REAR SIDE OF CABLE RUNWAY / DATA RACKS.

POWER RECEPTACLE AT CABLE RUNWAY N.T.S. 8

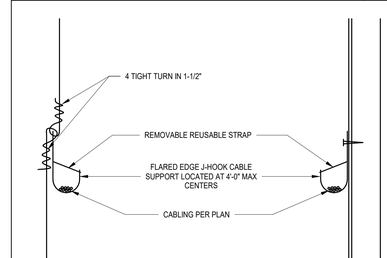

NOTES:
1. MAX. CABLE WEIGHT 5LBS PER FT.
2. MAX. CABLE SUPPORT SPACINGN 5 FT. O.C.

J-HOOK MOUNTING N.T.S. 9

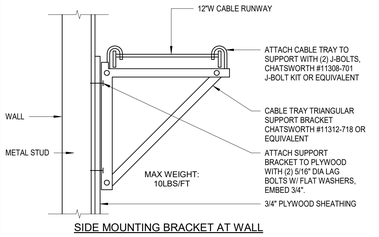

SIDE MOUNTING BRACKET AT WALL

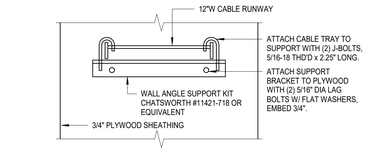

END MOUNTING BRACKET AT WALL

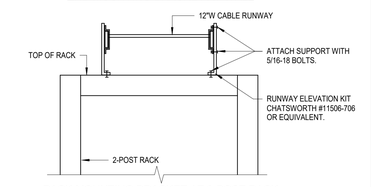

RACK MOUNTING BRACKET AT 2-POST RACK

MAX WT. OF LOADED CABLE TRAY 20LB./LF

CABLE RUNWAY MOUNTING WALL N.T.S. 4

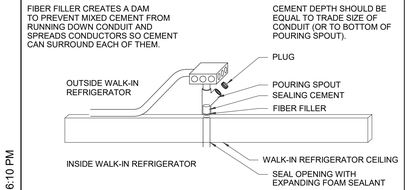

* EYS TO BE INSTALLED NO GREATER THAN 1" ABOVE SURFACE OF WALK-IN REFRIGERATOR.

EYS SEAL AT WALK-IN REFRIGERATOR N.T.S. 30

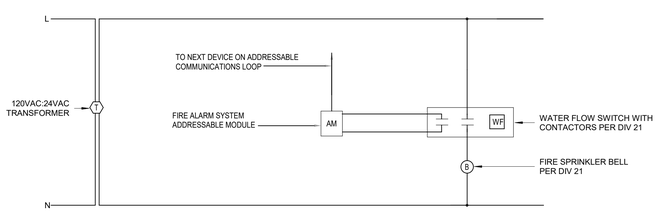

WATER FLOW SWITCH MONITOR AND FIRE BELL WIRING DIAGRAM 1" = 1'-0" 20

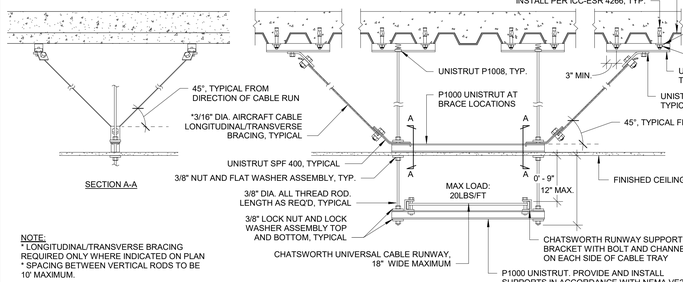

NOTE:
* LONGITUDINAL/TRANSVERSE BRACING REQUIRED ONLY WHERE INDICATED ON PLAN
* SPACING BETWEEN VERTICAL RODS TO BE 10' MAXIMUM.

CABLE TRAY SUPPORT N.T.S. 10

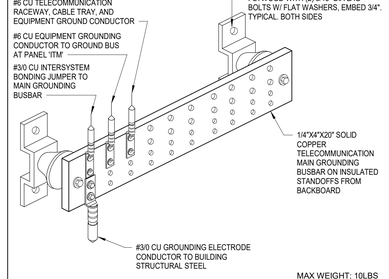

MAX WEIGHT: 10LBS

TELECOMMUNICATION MAIN GROUNDING BUS N.T.S. 5

VISALIA CAMPUS UNIVERSITY CENTER
COLLEGE OF THE SEQUOIAS
915 S. MOONEY BLVD
VISALIA, CA

DRAWING TITLE
ELECTRICAL DETAILS - BUILDING SIGNAL

PROJECT NO.
22-12498

DRAWING
E604.2

PLOT DATE: 9/4/2025 3:56:10 PM

\\tet-file1\Users\gene.vea_TETER\Documents\12498-E-UC_gene.vea.rvt

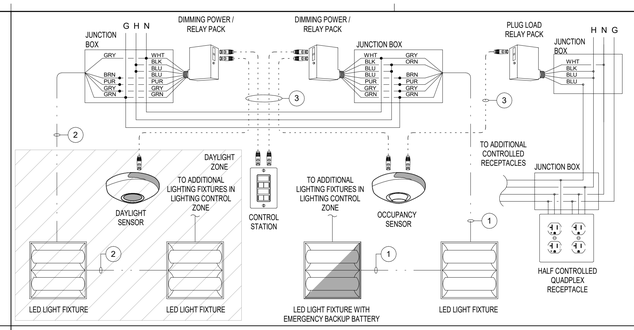

1. TYPE MC-PCS MC LUMINARY CABLE CONSISTING OF THE FOLLOWING CIRCUIT CONDUCTORS:
   1. CONTROLLED HOT - 1#12 CU THHN (BROWN)
   2. UNSWITCHED HOT - 1#12 CU THHN (ORANGE)
   3. NEUTRAL - 1#12 CU THHN (GREY)
   4. EQUIPMENT GROUNDING - 1#12 CU THHN (GREEN)
   5. 0-10VDC CONTROL: PVC JACKET CONTAINING 2#16 CU TFN (PURPLE AND GRAY)
2. TYPE MC-PCS MC LUMINARY CABLE CONSISTING OF THE FOLLOWING CIRCUIT CONDUCTORS:
   1. CONTROLLED HOT(BROWN)
   2. NEUTRAL - 1#12 CU THHN (GREY)
   3. EQUIPMENT GROUNDING - 1#12 CU THHN (GREEN)
   4. 0-10VDC CONTROL: PVC JACKET CONTAINING 2#16 CU TFN (PURPLE AND GRAY)
3. CATEGORY 5E CABLE (GREEN).

LIGHTING CONTROLS - 0-10V DIMMING N.T.S. 6

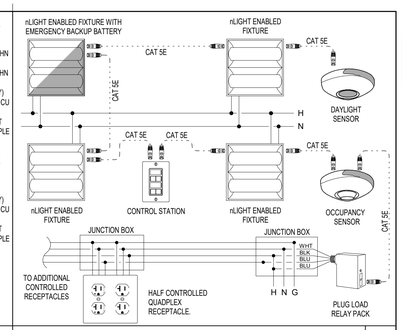

LIGHTING CONTROLS - nLIGHT ENABLED N.T.S. 1

1. CATEGORY 5E CABLE (GREEN).

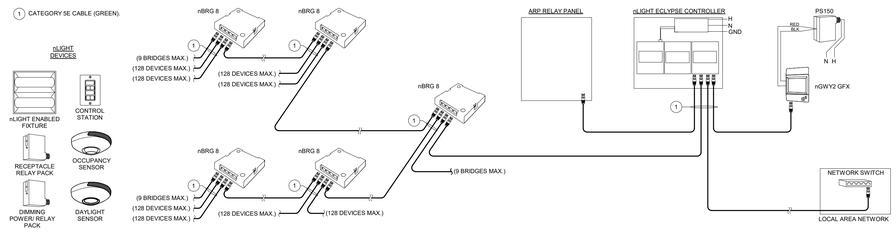

LIGHTING CONTROLS AUTOMATIC DEMAND RESPONSE N.T.S. 2

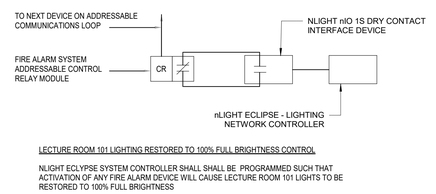

LECTURE ROOM 101 LIGHTING RESTORED TO 100% FULL BRIGHTNESS CONTROL

NLIGHT ECLYPSE SYSTEM CONTROLLER SHALL SHALL BE PROGRAMMED SUCH THAT ACTIVATION OF ANY FIRE ALARM DEVICE WILL CAUSE LECTURE ROOM 101 LIGHTS TO BE RESTORED TO 100% FULL BRIGHTNESS

LECTURE ROOM FULL BRIGHTNESS CONTROL DIAGRAM N.T.S. 8

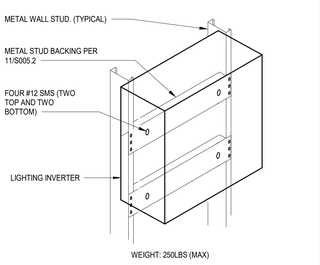

SURFACE PANEL MOUNTING N.T.S. 3

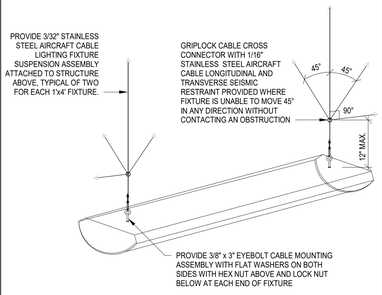

CABLE HUNG UTILITY N.T.S. 4

IDENTIFICATION STAMP
DIV. OF THE STATE ARCHITECT
APP: 02-122821 INC: 2
REVIEWED FOR
SS ☑ FLS ☑ ACS ☑
DATE: 11/20/2025

Teter, Inc. expressly reserves its common law copyright and other property rights in these plans. This document, the ideas and designs incorporated herein, as an instrument of professional service, is not to be used in whole or in part, for any other project without prior written authorization.

MARK	DATE	DESCRIPTION
A	11/13/2025	DSA BACKCHECK

08/21/2025

TETER, INC.
ARCHITECTS ENGINEERS CONNECTED
FRESNO HEADQUARTERS
VISALIA | BAKERSFIELD | MODESTO | SAN LUIS OBISPO

VISALIA CAMPUS UNIVERSITY CENTER
COLLEGE OF THE SEQUOIAS
915 S. MOONEY BLVD
VISALIA, CA

DRAWING TITLE
ELECTRICAL DETAILS - LIGHTING CONTROL

PROJECT NO.
22-12498

DRAWING
E605.2

PLOT DATE: 9/4/2025 3:56:15 PM

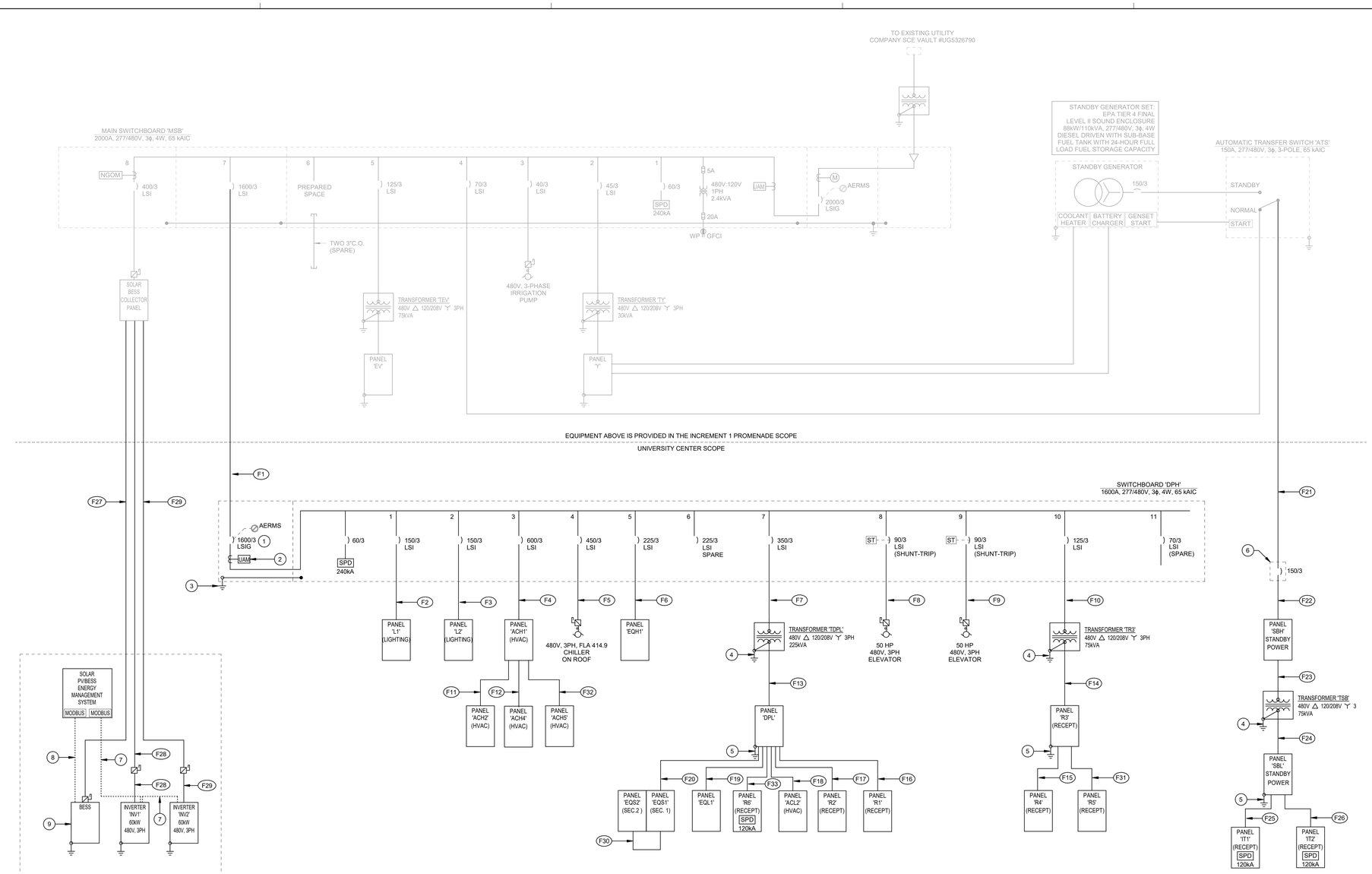

BATTERY ENERGY STORAGE SYSTEM REQUIRED PER 2022 CA ENERGY CODE SECTION 140.10(b)

BES SYSTEM SIZE:
POWER CAPACITY 50kW
ENERGY CAPACITY: 186kWh
VOLTAGE: 480VAC, 3-PH

SOLAR ELECTRIC PV SYSTEM REQUIRED PER 2022 CA ENERGY CODE SECTION 140.10(a)

PHASE 2 (INITIAL):
SOLAR PV SYSTEM SIZE:
POWER CAPACITY 87kWdc

FEEDER SCHEDULE

FEEDER	ORIGIN	DESTINATION	CONDUIT	CONDUCTORS	CALCULATED VOLTAGE DROP	REMARKS
F1	MAIN SWITCHBOARD 'DPH'	SWITCHBOARD 'DPH'	FIVE 3"C	4#400 KCMIL CU THWN, 1#4/0 CU GND IN EACH CONDUIT	1.88%	FIVE PARALLEL FEEDERS
F2	SWITCHBOARD 'DPH'	PANEL 'L1'	ONE 2"C	4#1/0 CU THWN, 1#6 CU GND	< 0.10%	FEEDER
F3	SWITCHBOARD 'DPH'	PANEL 'L2'	ONE 2"C	4#1/0 CU THWN, 1#6 CU GND	< 0.10%	FEEDER
F4	SWITCHBOARD 'DPH'	PANEL 'ACH1'	TWO 3"C	4#350 KCMIL CU THWN, 1#1 CU GND IN EACH CONDUIT	0.53%	TWO PARALLEL FEEDERS
F5	SWITCHBOARD 'DPH'	CHILLER	TWO 2-1/2"C	3#4/0 CU THWN, 1#2 CU GND IN EACH CONDUIT	0.14%	TWO PARALLEL FEEDERS
F6	SWITCHBOARD 'DPH'	PANEL 'EQH1'	ONE 2-1/2"C	4#4/0 CU THWN, 1#4 CU GND	< 0.10%	FEEDER
F7	SWITCHBOARD 'DPH'	TRANSFORMER 'TDPL'	ONE 4"C	3#500 KCMIL CU THWN, 1#2 CU GND	0.26%	FEEDER
F8	SWITCHBOARD 'DPH'	ELEVATOR	ONE 2"C	4#4 CU THWN, 1#8 CU GND	0.44%	FEEDER
F9	SWITCHBOARD 'DPH'	ELEVATOR	ONE 2"C	4#4 CU THWN, 1#8 CU GND	0.91%	FEEDER
F10	SWITCHBOARD 'DPH'	TRANSFORMER 'TR3'	ONE 2"C	3#1 KCMIL CU THWN, 1#6 CU GND	0.50%	FEEDER
F11	PANEL 'ACH1'	PANEL 'ACH2'	ONE 2"C	4#1 CU THWN, 1#6 CU GND	0.15%	FEEDER
F12	PANEL 'ACH1'	PANEL 'ACH4'	ONE 2"C	4#2 CU THWN, 1#6 CU GND	0.18%	FEEDER
F13	TRANSFORMER 'TDPL'	PANEL 'DPL'	THREE 3"C	4#300 KCMIL CU THWN, 1#1/0 CU GND IN EACH CONDUIT	0.46%	THREE PARALLEL FEEDERS WITH SUPPLY-SIDE BONDING JUMPER
F14	TRANSFORMER 'TR3'	PANEL 'R3'	ONE 3"C	4#350 KCMIL CU THWN, 1#2 CU GND	0.42%	FEEDER WITH SUPPLY-SIDE BONDING JUMPER
F15	PANEL 'R3'	PANEL 'R4'	ONE 2"C	4#3/0 CU THWN, 1#6 CU GND	0.47%	FEEDER
F16	PANEL 'DPL'	PANEL 'R1'	ONE 2"C	4#3/0 CU THWN, 1#6 CU GND	0.39%	FEEDER
F17	PANEL 'DPL'	PANEL 'R2'	ONE 2"C	4#3/0 CU THWN, 1#6 CU GND	0.31%	FEEDER
F18	PANEL 'DPL'	PANEL 'ACL2'	ONE 2"C	4#1/0 CU THWN, 1#6 CU GND	1.01%	FEEDER
F19	PANEL 'DPL'	PANEL 'EQL1'	ONE 2"C	4#1/0 CU THWN, 1#6 CU GND	0.62%	FEEDER
F20	PANEL 'DPL'	PANEL 'EQS1'	ONE 2-1/2"C	4#4/0 CU THWN, 1#4 CU GND	1.07%	FEEDER

FEEDER SCHEDULE

F21	AUTOMATIC TRANSFER SWITCH 'ATS'	STANDBY POWER SOURCE DISCONNECT	ONE 2"C	4#1/0 CU THWN, 1#6 CU GND	1.26%	FEEDER
F22	STANDBY POWER SOURCE DISCONNECT	PANEL 'SBH'	ONE 2"C	4#1/0 CU THWN, 1#6 CU GND	0.15%	FEEDER
F23	PANEL 'SBH'	TRANSFORMER 'TSB'	ONE 2"C	3#1/0 CU THWN, 1#6 CU GND	0.15%	FEEDER
F24	TRANSFORMER 'TSB'	PANEL 'SBL'	ONE 3"C	4#350 KCMIL CU THWN, 1#2 CU GND (SSBJ)	0.17%	FEEDER WITH SUPPLY-SIDE BONDING JUMPER
F25	PANEL 'SBL'	PANEL '1T1'	ONE 2"C	4#1/0 CU THWN, 1#6 CU GND	0.37%	FEEDER
F26	PANEL 'SBL'	PANEL '1T2'	ONE 2"C	4#2 CU THWN, 1#6 CU GND	0.25%	FEEDER
F27	BESS	SOLAR PV/BESS COLLECTOR PANEL	ONE 2"C	4#4CU THWN, 1#6 CU GND	0.13%	FEEDER
F28	INVERTER 'INV1'	SOLAR PV/BESS COLLECTOR PANEL	ONE 2"C	4#2 CU THWN, 1#6 CU GND	2.19%	FEEDER
F29	INVERTER 'INV2'	SOLAR PV/BESS COLLECTOR PANEL	ONE 2"C	4#2 CU THWN, 1#6 CU GND	2.19%	FEEDER
F30	PANEL 'EQS1'	PANEL 'EQS2'	ONE 2-1/2"C	4#4/0 CU THWN, 1#4 CU GND	< 0.10%	FEEDER
F31	PANEL 'R3'	PANEL 'R5'	ONE 2"C	4#3/0 CU THWN, 1#6 CU GND	0.98%	FEEDER
F32	PANEL 'ACH1'	PANEL 'ACH5'	ONE 2"C	4#1/0 CU THWN, 1#6 CU GND	0.25%	FEEDER
F33	PANEL 'DPL'	PANEL 'R6'	ONE 1-1/4"C	4#2 CU THWN, 1#6 CU GND	0.31%	FEEDER

KEYNOTES

1. GROUND FAULT PROTECTION FEATURE OF MAIN CIRCUIT BREAKER SHALL BE TESTED BY AN INDEPENDENT TESTING AGENCY IN ACCORDANCE WITH NETA SPECIFICATIONS AND A REPORT SHALL BE SUBMITTED TO THE ENGINEER.
2. 2022 CA ENERGY CODE COMPLIANT USER-ACCESSIBLE METER WITH THE FOLLOWING FEATURES:
   1. INSTANTANEOUS kW DEMAND
   2. HISTORIC PEAK DEMAND
   3. RESETTABLE kWh
   4. kWh PER RATE PERIOD
3. REMOTE BUILDING GROUNDING ELECTRODE SYSTEM PER DETAIL 9/E600.
4. TRANSFORMER GROUND PER DETAIL 3/E600.
5. PANEL GROUND PER DETAIL 3/E600.
6. 150A, 480V, 3-POLE ENCLOSED CIRCUIT BREAKER WITH PERMANENTLY INSTALLED LOCK OFF MECHANICS. PROVIDE LABEL INDICATING STANDBY POWER SOURCE DISCONNECT.
7. ONE 1"C WITH ONE RS485 COMMUNICATION CABLES BELDEN 3106A INSTALLED BETWEEN INVERTERS AND TO ENERGY MANAGEMENT SYSTEM MODBUS INTERFACE PER MANUFACTURER'S INSTRUCTIONS.
8. ONE 1"C WITH ONE OUTDOOR RATED CATEGORY 5E CABLE INSTALLED BETWEEN BESS AND ENERGY MANAGEMENT SYSTEM MODBUS INTERFACE PER MANUFACTURER'S INSTRUCTIONS.
9. MOUNTING DETAIL OF BATTERY ENERGY STORAGE SYSTEM (BESS) PER DETAIL 1/E601.2

GENERAL NOTES

A. CIRCUIT BREAKERS SUPPLYING CLASS 1 TRANSFORMERS SHALL BE LOCKABLE IN THE OFF POSITION.

B. CIRCUIT BREAKERS THAT ARE 1200A OR LARGER SHALL HAVE AN ARC ENERGY REDUCTION FEATURE TO REDUCE CLEARING TIME. THE ARC ENERGY REDUCTION FEATURE SHALL BE AN ENERGY-REDUCING MAINTENANCE SWITCH WITH A LOCAL STATUS INDICATOR. WHEN THE SWITCH IS TURNED ON IT SHALL REDUCE THE CLEARING TIME AND SETS THE INSTANTANEOUS PICKUP CLEARING TIME TO BE 2 TIMES FASTER THAN THE NORMAL INSTANTANEOUS PICKUP SENSOR AMPERAGE.

C. ARC-FLASH HAZARD WARNING LABELS SHALL BE PROVIDED AT ELECTRICAL EQUIPMENT SUCH AS SWITCHBOARDS AND PANELBOARDS IN ACCORDANCE WITH CEC 110.16.

D. CIRCUIT IDENTIFICATION - A TYPEWRITTEN CIRCUIT DIRECTORY SHALL BE PROVIDED AT EACH PANELBOARD AND SWITCHBOARD IN ACCORDANCE WITH CEC ARTICLE 408.4(A). THE CONTRACTOR SHALL DEVELOP AND PREPARE THE CIRCUIT IDENTIFICATION DESCRIPTION BASED ON THE AS-BUILT CONDITION.

E. SOURCE OF SUPPLY IDENTIFICATION - ALL SWITCHBOARDS, PANELBOARDS AND TRANSFORMERS SHALL HAVE A TYPEWRITTEN LABEL APPLIED INDICATING THE DEVICE OR EQUIPMENT WHERE THE POWER SUPPLY ORIGINATES PER CEC ARTICLE 408.4(B).

IDENTIFICATION STAMP
DIV. OF THE STATE ARCHITECT
APP: 02-122821 INC: 2
REVIEWED FOR
SS ☑ FLS ☑ ACS ☑
DATE: 11/20/2025

Teter, Inc. expressly reserves its common law copyright and other property rights in these plans. This document, the ideas and designs incorporated herein, as an instrument of professional service, is not to be used in whole or part, for any other project without prior written authorization.

MARK	DATE	DESCRIPTION
A	11/13/2025	DSA BACKCHECK

08/21/2025

TETER, INC.
ARCHITECTS ENGINEERS CONNECTED
FRESNO HEADQUARTERS
VISALIA | BAKERSFIELD | MODESTO | SAN LUIS OBISPO

VISALIA CAMPUS UNIVERSITY CENTER
COLLEGE OF THE SEQUOIAS
915 S. MOONEY BLVD
VISALIA, CA

DRAWING TITLE
SINGLE LINE DIAGRAM

PROJECT NO.
22-12498

DRAWING
E700.2

\\tet-file1\Users\gene.vea_TETER\Documents\12498-E-UC_gene.vea.rvt
PLOT DATE: 9/4/2025 3:56:21 PM

\\tet-file1\Users\gene.vea_TET\RDocuments\12498-E-UC_gene.vea.rvt

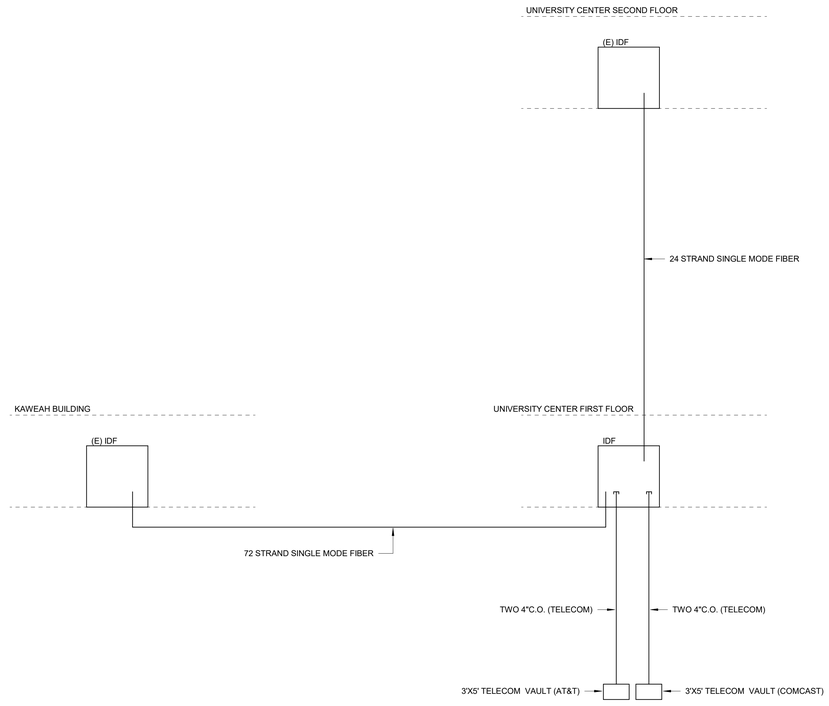

FIBER OPTIC CABLE RISER DIAGRAM

N.T.S. | 1

PLOT DATE: 9/4/2025 3:56:24 PM

IDENTIFICATION STAMP
DIV. OF THE STATE ARCHITECT
APP: 02-122821 INC: 2
REVIEWED FOR
SS ☑ FLS ☑ ACS ☑
DATE: 11/20/2025

Teter, Inc. expressly reserves its common law copyright and other property rights in these plans. This document, the ideas and designs incorporated herein, as an instrument of professional service, is not to be used in whole or part, for any other project without prior written authorization.

MARK	DATE	DESCRIPTION
A	11/13/2025	DSA BACKCHECK

08/21/2025

TETER, INC.
FRESNO HEADQUARTERS
VISALIA | BAKERSFIELD | MODESTO | SAN LUIS OBISPO
ARCHITECTS ENGINEERS CONNECTED

VISALIA CAMPUS UNIVERSITY CENTER
COLLEGE OF THE SEQUOIAS
915 S. MOONEY BLVD
VISALIA, CA

DRAWING TITLE
FIBER OPTIC CABLE RISER DIAGRAM

PROJECT NO.
22-12498

DRAWING
E701.2

\\tet-file1\Users\gene.vea_TETER\Documents\12498-E-UC_gene.vea.rvt

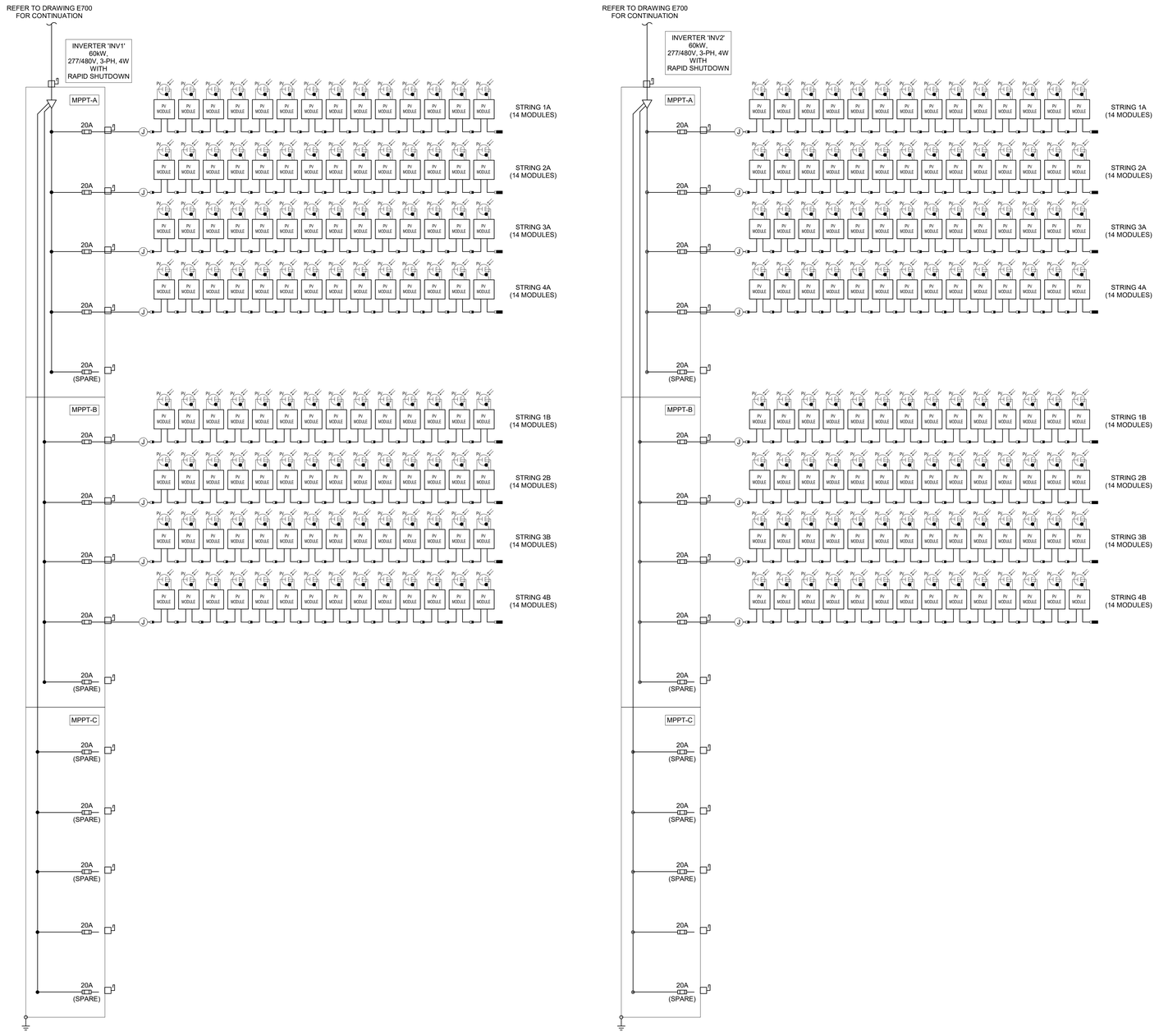

SOLAR PHOTOVOLTAIC SYSTEM DIAGRAM N.T.S. 1

SOLAR AND BATTERY - UNIVERSITY CENTER BUILDINGS ENERGY CODE ANALYSIS

BUILDING CONDITIONED FLOOR AREA:	49,463 SF	
BUILDING USE:	SCHOOL	
CLIMATE ZONE:	13	
SOLAR PV CALCULATION (INCREMENT 2):		
EQUATION 140.10-A	(CFA x A) / 1000 = kW_{PVDC}	
	49,463 x 1.63 / 1000 =	80.62 kW_{PVDC} CODE MINIMUM ALLOWABLE PV SIZE
BATTERY CALCULATION:		
EQUATION 140.10-B BESS RATED ENERGY CAPACITY	kW_{PVDC} x B / $D^{0.5}$ = kWH_{BATT}	
	80.62 x 1.87 / .$9^{0.5}$ =	158.92 kWh_{BATT} CODE MINIMUM REQUIRED BESS kWH
EQUATION 140.10-C BESS RATED POWER CAPACITY	kW_{PVDC} x C = kW_{BATT}	
	80.62 x 0.46 =	37.09 kW_{BATT} CODE MINIMUM REQUIRED BESS kW

SOLAR PV SYSTEM - UNIVERSITY CENTER ELECTRICAL SPECIFICATIONS

SYSTEM SIZE	
87.36 kW_{PVDC} (STC)	81.92 kWAC (CEC-AC)
MODULE	
(224) PANASONIC EVERVOLT SERIES MODEL EVPV390H	
STC POWER RATING:	390W
PTC POWER RATING:	371.3W
SHORT CIRCUIT CURRENT (A)	10.19A
OPEN CIRCUIT VOLTAGE (V)	48.6V
MAX. POWER POINT CURRENT (A)	9.40A
MAX. POWER POINT VOLTAGE (V)	41.5V
MAX. SERIES FUSE RATING (A)	25A
INVERTER	
TWO (2) 60 kW INVERTERS	
MANUFACTURER: CHINT POWER SYSTEMS AMERICA	
MODEL: CPS SCA60KTL-DO/US-480 WITH RAPID SHUTDOWN	
OPERATING VOLTAGE (V)	480V
OPERATING CURRENT @ 480V (A)	79.4 A
INVERTER EFFICIENCY (CEC)	98.5%
PHOTOVOLTAIC ARRANGEMENT	
NUMBER OF MODULES	224
MODULES PER STRING	14
NUMBER OF STRINGS	16
ENVIRONMENTAL DESIGN CONDITIONS	
RECORD HIGH TEMPERATURE (°F)	116°F
RECORD LOW TEMPERATURE (°F)	15°F

GENERAL NOTES

A. ARC-FLASH HAZARD WARNING LABELS SHALL BE PROVIDED AT ELECTRICAL EQUIPMENT SUCH AS SWITCHBOARDS AND PANELBOARDS IN ACCORDANCE WITH CEC 110.16.

B. CIRCUIT IDENTIFICATION -A TYPEWRITTEN CIRCUIT DIRECTORY SHALL BE PROVIDED AT EACH PANELBOARD AND SWITCHBOARD IN ACCORDANCE WITH CEC ARTICLE 408.4(A). THE CONTRACTOR SHALL DEVELOP AND PREPARE THE CIRCUIT IDENTIFICATION DESRCIPTION BASED ON THE AS-BUILT CONDITION.

C. SOURCE OF SUPPLY IDENTIFICATION -ALL SWITCHBOARDS, PANELBOARDS AND TRANSFORMERS SHALL HAVE A TYPEWRITTEN LABEL APPLIED INDICATING THE DEVICES OR EQUIPMENT WHERE THE POWER SUPPLY ORIGINATES PER CEC ARTICLE 408.4(B).

D. REFER TO DRAWING E701 FOR CONNECTION TO CAMPUS ELECTRICAL DISTRIBUTION SYSTEM.

E. PROVIDE CIRCUIT IDENTIFICATION AND MARKING AND LABELING OF SOLAR PV EQUIPMENT PER CEC ARTICLE 690.

PLOT DATE: 9/4/2025 3:56:29 PM

IDENTIFICATION STAMP
DIV. OF THE STATE ARCHITECT
APP: 02-122821 INC: 2
REVIEWED FOR
SS ☑ FLS ☑ ACS ☑
DATE: 11/20/2025

Teter, Inc. expressly reserves its common law copyright and other property rights in these plans. This document, the ideas and designs incorporated herein, as an instrument of professional service, is not to be used in whole or in part, for any other project without prior written authorization.

MARK	DATE	DESCRIPTION
A.	11/13/2025	DSA BACKCHECK



08/21/2025

TETER, INC.
FRESNO HEADQUARTERS
VISALIA | BAKERSFIELD | MODESTO | SAN LUIS OBISPO
ARCHITECTS ENGINEERS CONNECTED

VISALIA CAMPUS UNIVERSITY CENTER
COLLEGE OF THE SEQUOIAS
915 S. MOONEY BLVD
VISALIA, CA

DRAWING TITLE
SOLAR PHOTOVOLTAIC SYSTEM

PROJECT NO.
22-12498

DRAWING
E702.2

FIRE ALARM SYSTEM DESCRIPTION

THE FIRE ALARM SYSTEM DESCRIBED BY THESE DRAWINGS AND ASSOCIATED SPECIFICATIONS IS A MANUAL AND AUTOMATIC SYSTEM. THIS SYSTEM UTILIZES SMOKE DETECTORS ON CEILINGS AND IN THE ROOMS HOUSING THE FIRE ALARM SYSTEM EQUIPMENT WITH FIRE SPRINKLERS THROUGHOUT THE BUILDING. FIRE SPRINKLERS SHALL BE INSTALLED IN ATTICS IN LIEU OF HEAT DETECTORS. THE SYSTEM IS ADDRESSABLE AND IS WIRED CLASS 'B' WITHIN THE BUILDINGS AND CLASS 'B' BETWEEN BUILDINGS.

FIRE ALARM APPROVAL

THE FIRE ALARM SYSTEM DESIGN IS A "COMPLETE PLAN SUBMITTAL" PER DSA FIRE ALARM SUBMITTAL GUIDELINES. THE CONTRACTOR SHALL INSTALL THE SYSTEM AS SHOWN AND AS HEREIN SPECIFIED. IF ANY SUBSTITUTION OF FIRE ALARM EQUIPMENT IS TO BE REQUESTED, SUCH REQUEST SHALL BE MADE A MINIMUM OF TWO WEEKS PRIOR TO PROJECT BID DATE. THE CONTRACTOR SHALL BE RESPONSIBLE FOR SUBMITTING THE SUBSTITUTION PER THE DSA GUIDELINES AND SHALL PAY ALL ADDITIONAL COSTS REQUIRED TO ACCOMMODATE REVIEW OF THE SUBSTITUTED FIRE ALARM SYSTEM BY DSA, WHETHER OR NOT SUCH APPROVAL IS GIVEN. THE CONTRACTOR'S SUBMITTAL SHALL INCLUDE MANUFACTURER'S CATALOG CUT SHEETS AND CSFM LISTING SHEETS FOR THE INDIVIDUAL COMPONENTS COMPRISING THE SUBSTITUTED FIRE ALARM SYSTEM, BATTERY LOAD CALCULATIONS AND VOLTAGE DROP CALCULATIONS FOR EACH SIGNALING CIRCUIT.

APPLICABLE CODES AND STANDARDS

2022 CA BUILDING CODE - CCR, TITLE 24, PART 2, VOLUMES 1 & 2
(2021 IBC AND CALIFORNIA AMENDMENTS)
2022 CA ELECTRICAL CODE - CCR, TITLE 24, PART 3
(2020 NEC AND CALIFORNIA AMENDMENTS)
2022 CA MECHANICAL CODE - CCR, TITLE 24, PART 4
(2021 UMC AND CALIFORNIA AMENDMENTS)
2022 CA PLUMBING CODE - CCR, TITLE 24, PART 5
(2021 UPC AND CALIFORNIA AMENDMENTS)
2022 CA FIRE CODE - CCR, TITLE 24, PART 9
(2021 IFC AND CALIFORNIA AMENDMENTS)
2022 CA REFERENCE STANDARDS CODE - CCR, TITLE 24, PART 12
2022 NFPA 13, INSTALLATION OF SPRINKLER SYSTEMS AND 2022 CALIFORNIA AMENDMENTS
2022 NFPA 72, NATIONAL FIRE ALARM CODE, AND 2022 CALIFORNIA AMENDMENTS
PUBLIC SAFETY, STATE FIRE MARSHAL REGULATIONS - CCR, TITLE 19
DSA GUIDELINES FOR FIRE AND LIFE SAFETY SYSTEMS, DIVISION OF THE STATE ARCHITECT OFFICE OF REGULATION SERVICES.

FIRE ALARM GENERAL NOTES

1. UNDERGROUND AND EXTERIOR CONDUITS WILL HAVE WATERTIGHT FITTINGS. (CEC 110.11 AND CEC 300.6)
2. OUTLETS ON OPPOSITE SIDES OF A FIRE RATED WALL SHALL BE INSTALLED WITH A MINIMUM HORIZONTAL SPACING OF TWO FEET.
3. FIRE ALARM DEVICE MOUNTING HEIGHTS SHALL BE AS FOLLOWS:
   a. PULL STATION - OPERABLE PART OF A MANUALLY ACTUATED ALARM INITIATING DEVICE SHALL BE NOT LESS THAN 42" FROM FINISHED FLOOR; AND TOP OF BOX SHALL NOT BE MORE THAN 48" FROM FINISHED FLOOR. (CBC 11B 308.1.1, NFPA 72 17.14.5)
   b. INTERIOR AUDIBLE NOTIFICATION APPLIANCE - AT LEAST 90" TO THE TOP OF DEVICE ABOVE FINISHED FLOOR AND NOT LESS THAN 6" BELOW FINISHED CEILING. (NFPA 72 18.4.8.1)
   c. WALL-MOUNTED STROBE OR SPEAKER/STROBE - AT LEAST 80" TO BOTTOM OF LENS AND NOT GREATER THAN 96" TO TOP OF LENS ABOVE FINISHED FLOOR. (NFPA 72 18.5.5.1)
4. AUDIBLE SIGNAL DEVICES OF A FIRE ALARM SYSTEM INTENDED TO ALERT ALL OCCUPANTS SHALL BE SO LOCATED AND UNOBSTRUCTED AS TO CAUSE A LEVEL OF AUDIBILITY OF AT LEAST 15 dBA ABOVE AVERAGE AMBIENT SOUND LEVEL BUT NOT LESS THAN 75 dBA AT TEN FEET, OR MORE THAN 110 dBA IN TOTAL. (NFPA 72 18.4.3.1, 18.4.1.2 AND CFC 907.5.2.1.2)
5. AMBIENT NOISE LEVELS SHALL BE CONSTRUED TO MEAN THAT WHICH CAN NORMALLY BE EXPECTED TO EXIST WHEN THE FACILITY, BUILDING, ROOM OR AREA IS FUNCTIONING UNDER NORMAL OPERATIVE OR WORKING CONDITIONS. (CFC 907.5.2.1.1)
6. AUDIBLE DEVICES SHALL SOUND THE CA UNIFORM FIRE ALARM SIGNAL IN TEMPORAL MODE. PROVIDE AT LEAST ONE EXTERIOR AUDIBLE DEVICE ON BUILDING FOR E OCCUPANCIES. (CFC 907.5.2.1.3)
7. EMERGENCY VOICE/ALARM COMMUNICATION SYSTEM SHALL COMPLY WITH CBC 907.2.3 AND NFPA 72 24.4.2
8. VISUAL DEVICES SHALL NOT EXCEED TWO FLASHES PER SECOND AND SHALL NOT BE SLOWER THAN ONE FLASH EVERY SECOND. (NFPA 72 18.5.3.1)
9. AUTOMATIC SMOKE DETECTION SHALL BE PROVIDED AT THE LOCATION OF EACH FIRE ALARM CONTROL UNIT, NOTIFICATION APPLIANCE CIRCUIT POWER EXTENDER AND SUPERVISING STATION TRANSMITTING EQUIPMENT TO PROVIDE NOTIFICATION OF FIRE AT THAT LOCATION. (NFPA 72 10.4.4)
10. BRANCH CIRCUITS PROTECTING FIRE ALARM EQUIPMENT SHALL BE LABELED PER NFPA 72 10.6.5.2.2 AND SHALL INCLUDE A LISTED CIRCUIT BREAKER LOCKING DEVICE PER NFPA 72 10.6.5.4
11. COMPLETE THE NFPA 72 RECORD OF COMPLETION, TESTING ALL DEVICES AND APPLIANCES. PROVIDE A COPY OF THE COMPLETED RECORD OF COMPLETION TO THE OWNER (SCHOOL DISTRICT), ARCHITECT, LOCAL FIRE AUTHORITY, AND DSA VIA THE PROJECT INSPECTOR. TESTING OF THE ENTIRE SYSTEM SHALL BE MADE IN THE PRESENCE OF THE LOCAL FIRE AUTHORITY AND THE DSA INSPECTOR OF RECORD (IOR). FINAL TEST SHALL INCLUDE READ OUT VERIFICATION FORM FROM CENTER STATION.
12. THE AUTOMATIC ALARM SYSTEM SHALL BE INSTALLED, TESTED, AND MAINTAINED IN ACCORDANCE WITH THE STATE FIRE MARSHAL'S REGULATIONS (CFC 907.8.5, NFPA 72 14.4.1.1, NFPA 72 14.5)
13. MICROPHONE ACCESSIBLITY SHALL COMPLY WITH CBC 11B-305 AND 11B-308

FIRE ALARM SYSTEM EQUIPMENT LEGEND

SYMBOL	DESCRIPTION
FACP	FIRE ALARM CONTROL PANEL "FACP": GAMEWELL-FCI E3 SERIES W/ AUTOMATIC CHARGING SYSTEM C.S.F.M. #7165-1703:0125
ANN	FIRE ALARM LCD ANNUNCIATOR: GAMEWELL-FCI #NGA AND CABINET C.S.F.M. #7165-1703:0125
M	PAGING MICROPHONE IN REMOTE ENCLOSURE: GAMEWELL-FCI #NCC-MIC C.S.F.M. #7165-1703:0125
DCRAT	DIGITAL CELLULAR RADIO ALARM TRANSMISSION DEVICE TELLULAR CORP. #TG-TFE C.S.F.M. #7300-1402:0503
FABP	FIRE ALARM BOOSTER PANEL "FABP": HONEYWELL #HPF24S8 W/ AUTOMATIC CHARGING SYSTEM C.S.F.M. #7135-1637:0102
F	ADRESSABLE DOUBLE ACTION MANUAL PULL STATION (ON WALL): GAMEWELL-FCI #MS-7AF C.S.F.M. #7150-1703:0119
CO	ADDRESSABLE MULTI-CRITERIA FIRE/CO DETECTOR AND SOUNDER BASE (ON CEILING): GAMEWELL-FCI #MCS-COF/B200S C.S.F.M. #7275-1703:0175/7300-1653:0238
SD	ADDRESSABLE SMOKE DETECTOR AND BASE (ON CEILING) GAMEWELL-FCI #ASD-PL2F / B501 C.S.F.M. #7272-1703:0121/7300-1653:0109
HD	ADDRESSABLE HEAT DETECTOR AND BASE (ON CEILING): GAMEWELL-FCI #ATD-L2F / B501 C.S.F.M. #7270-1703:0115/7300-1653:0109
DD	DUCT SMOKE DETECTOR: GAMEWELL-FCI #DNR/ASD-PL2FR C.S.F.M. #7272-1703:0121
AM	ADDRESSABLE SUPERVISED INPUT MODULE: GAMEWELL-FCI #AMM-4F C.S.F.M. #7300-1703:0102
CR	CONTROL RELAY MODULE: GAMEWELL-FCI #AOM-2SF C.S.F.M. #7300-1703:0102
SV XX	SPEAKER/STROBE ANNUNCIATOR - WALL MOUNTED (XX REPRESENTS CANDELA) - SYSTEM SENSOR #SPSRL C.S.F.M. #7320-1653:0505
SV XX	SPEAKER/STROBE ANNUNCIATOR - CEILING MOUNTED (XX REPRESENTS CANDELA) - SYSTEM SENSOR #SPSCRL C.S.F.M. #7320-1653:0505
S WP	VOICE EVACUATION SYSTEM SPEAKER, OUTDOOR SYSTEM SENSOR #SPRK-R C.S.F.M. #7320-1653:0201
SM	SYNCHRONIZATION MODULE SYSTEM SENSOR #MDL3R C.S.F.M. # 7300-1653:0202
TS	TAMPER SWITCH AT P/V, FIRE SPRINKLER RISER, OR DOUBLE DETECTOR CHECK VALVE. SPECIFIED UNDER FIRE PROTECTION DRAWINGS.
FS	FLOW SWITCH AT FIRE SPRINKLER RISER. SPECIFIED UNDER FIRE PROTECTION DRAWINGS.
B	FIRE SPRINKLER BELL SPECIFIED UNDER FIRE PROTECTION DRAWINGS.
RTI	REMOTE TEST POSITION INDICATOR SPECIFIED UNDER DIVISION 15.
RTS	REMOTE TEST SWITCH SPECIFIED UNDER DIVISION 15.
RDC	SYSTEM RECORDS DOCUMENTS CABINET (DIMENSIONS 12"W x 13"H x 2-1/4"D) SPACE AGE ELECTRONIC ACERBOX #SRD ACE-11 C.S.F.M. #7300-0553:0110
	END OF LINE RESISTOR SYSTEM SENSOR EOLR-1 C.S.F.M. #7300-1653:0103

FIRE ALARM LEGEND N.T.S. 6

FIRE ALARM MONITORING NOTE

AUTOMATIC FIRE ALARM SYSTEMS SHALL TRANSMIT THE ALARM, SUPERVISORY AND TROUBLE SIGNALS TO AN APPROVED SUPERVISING STATION AS REQUIRED BY NFPA 72 AS AMENDED BY CFC CHAPTER 80. THE SUPERVISING STATION SHALL BE LISTED AS EITHER UUFX OR UUJS BY UNDERWRITERS LABORATORY OR SHALL MEET THE REQUIREMENTS OF FACTORY MUTUAL RESEARCH APPROVAL STANDARD 3011. SUPERVISION OF SYSTEM AND LEASED TELEPHONE LINES SHALL BE ARRANGED BY OWNER.

FIRE ALARM MONITORING N.T.S. 7

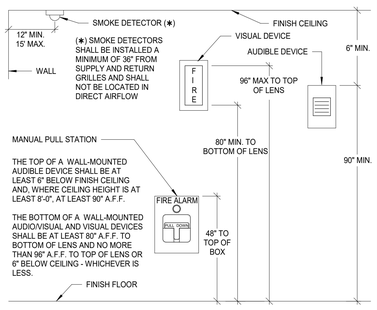

FIRE ALARM DEVICE ELEVATIONS N.T.S. 9

FIRE ALARM CODES AND NOTES N.T.S. 10

FIRE ALARM CABLE SCHEDULE

CABLE DESIGNATION	DESCRIPTION	MANUFACTURER & CATALOG #	OUTER JACKET COLOR	SYSTEM	USE
'FNET'	4-STRAND MULTI-MODE FIBER OPTIC CABLE (62.5/125um)	CORNING INFINICOR 300 OR EQUIVALENT	BLACK	FIRE ALARM	SITE OPTICAL FIBER FIRE ALARM NETWORK
'FA'	1 PR, #16 AWG SOLID UNSHIELDED FPL	WEST PENN #D990	RED	FIRE ALARM	ADDRESSABLE SLC LOOP CABLE - INTERIOR
'FN'	1 PR, #12 SOLID UNSHIELDED FPLP	WEST PENN #60995B	RED	FIRE ALARM	VISUAL (STROBE) NOTIFICATION APPLIANCE CIRCUIT - INTERIOR
'FS'	1 PR, #14 AWG SOLID SHIELDED, FPLP	WEST PENN #60992B	RED	FIRE ALARM	AUDIBLE (SPEAKER) NOTIFICATION APPLIANCE CIRCUIT - INTERIOR
'D'	4 UTP #24 AWG CATEGORY 6 FILLED INDOOR	COMMSCOPE MEDIA 6 #6NFA4+	BLACK	DATA	HORIZONTAL DATA CABLE - INDOOR

FIRE ALARM CABLE SCHEDULE N.T.S. 11

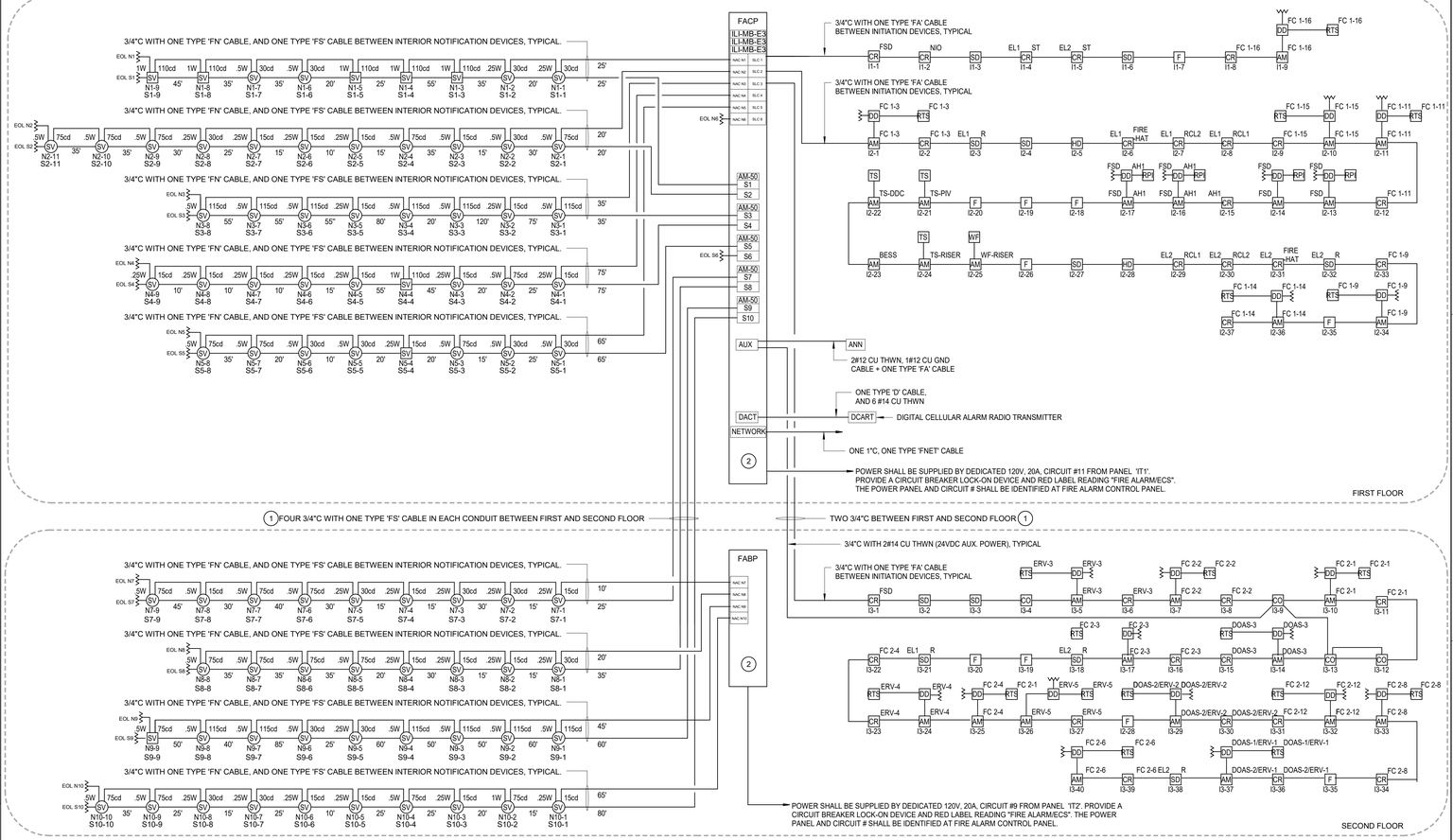

KEYNOTES

1. PROVIDE FIRE STOPPING AT RATED CEILING/WALL PENETRATIONS PER DRAWING E602.2, DETAIL 23.
2. PROVIDE FIRE ALARM CONTROL PANEL AND FIRE ALARM BOOSTER PANEL AND MOUNT TO WALL AT +72" AFF MAXIMUM TO TOP OF PANEL.

ABBREVIATIONS LEGEND

EL1	- ELVATOR 1	NIO	- NLIGHT DRY CONTACT INTERFACE DEVICE
EL2	- ELVATOR 2	FSD	- FIRE/SMOKE DAMPER
RCL1	- ELEVATOR RECALL TO LEVEL 1	FC X-XX	- MECHANICAL FAN COIL UNIT (XX-X REPRESENT MECHANICAL UNIT NUMBER)
RCL2	- ELEVATOR RECALL TO LEVEL 2	AH	- MECHANICAL AIR HANDLER UNIT
R	- ELEVATOR RECALL (SMOKE DETECTOR)	DOAS-X	- MECHANICAL DOAS SYSTEM (X REPRESENTS MECHANICAL UNIT NUMBER)
FIRE-HAT	- FIRE HAT	ERV-X	- MECANINCAL ENERGY RECOVERY VENTILATOR UNIT (X REPRESENTS MECHANICAL UNIT NUMBER)
ST	- SHUNT TRIP		

FIRE ALARM RISER DIAGRAM N.T.S. 1

FIRE ALARM SYSTEM OPERATIONAL MATRIX

DEVICE	ACTIVATE EVACUATION SIGNALS/STROBES	SHUTDOWN FIRE/SMOKE DAMPER, OR ACTIVATE SMOKE VENT RELEASE	SHUTDOWN HVAC EQUIPMENT	ANNUNCIATE AT BUILDING FACP AND ALL REMOTE ANNUNCIATORS	SEND SIGNAL TO CENTRAL STATION	ACTIVATE LOCAL SOUNDER BASE TEMPORAL 4 ALARM	ASSOCIATED ELEVATOR RECALL	ASSOCIATED ELEVATOR FIRE-HAT	ASSOCIATED ELEVATOR SHUNT-TRIP	SPRINKLER BELL
FIRE ALARM PANEL SYSTEM TROUBLE				X	X					
MANUAL PULL STATION	X			X	X					
SMOKE DETECTOR	X	X		X	X					
HEAT DETECTOR	X			X	X					
DUCT SMOKE DETECTOR	X	X	X	X	X					
WATER FLOW SWITCH	X			X	X					X
VALVE TAMPER SWITCH				SUPERVISORY	SUPERVISORY					
POST INDICATOR VALVE				SUPERVISORY	SUPERVISORY					
CARBON MONOXIDE DETECTORS				X	X	X				
BATTERY ENERGY STORAGE (BESS) MONITORING				SUPERVISORY	SUPERVISORY					
SMOKE DETECTOR IN ASSOICATED ELEVATOR LOBBIES							X			
SMOKE DETECTOR IN ASSOCIATED ELEVATOR MACHINE ROOM								X		
HEAT DETECTOR IN ASSOCIATED ELEVATOR MACHINE ROOM									X	

FIRE ALARM OPERATIONAL MATRIX N.T.S. 5

IDENTIFICATION STAMP
DIV. OF THE STATE ARCHITECT
APP: 02-122821 INC: 2
REVIEWED FOR
SS ☑ FLS ☑ ACS ☑
DATE: 11/20/2025

Teter, Inc. expressly reserves its common law copyright and other property rights in these plans. This document, the ideas and designs incorporated herein, as an instrument of professional service, is not to be used in whole or in part, for any other project without prior written authorization.

MARK	DATE	DESCRIPTION
A	11/13/2025	DSA BACKCHECK

09/21/2025

TETER, INC.
ARCHITECTS ENGINEERS CONNECTED
FRESNO HEADQUARTERS
VISALIA | BAKERSFIELD | MODESTO | SAN LUIS OBISPO

VISALIA CAMPUS UNIVERSITY CENTER
COLLEGE OF THE SEQUOIAS
915 S. MOONEY BLVD
VISALIA, CA

DRAWING TITLE
FIRE ALARM RISER DIAGRAM, LEGEND, AND NOTES

PROJECT NO.
22-12498

DRAWING
E710.2

\\tet-file1\Users\gene.vea_TETR\Documents\12498-E-UC_gene.vea.rvt
PLOT DATE: 9/4/2025 3:56:45 PM

FIRE ALARM CONTROL PANEL 'FACP' BATTERY CALCULATIONS

QTY.	DEVICE	DESCRIPTION	STANDBY CURRENT	ALARM CURRENT/ DEVICE	ALARM CURRENT
3	ILI-MB-E3	Intel. Loop Interface, Main Board (ILI-MB-E3)	0.2430	0.1500	0.4500
1	LCD-E3	LCD Display & Switch Control (LCD-E3)	0.0240	0.0280	0.0280
1	DACT-E3	Digital Communicator (DACT-E3)	0.0180	0.0180	0.0180
1	ASM-16	Auxiliary Switch Sub-Assembly (ASM-16)	0.0110	0.0110	0.0110
1	NGA	Network LCD Annunicator (NGA)	0.2000	0.2000	0.2000
1	INCC-MIC	Paging Microphone Module	0.0000	0.0000	0.0000
5	AM-50	Amplifier, 50Watt, 25/70 Vrms	0.4300	2.2060	11.0300
1	INI-VGC	Voice Gateway Module	0.1500	0.1500	0.1500
1	INI-VGX	Transponder Voice Gateway	0.1500	0.1500	0.1500
1	ANN	Remote Annunciator Panel (NGA) and cabinet	0.2000	0.2000	0.2000
1	TG 7FE	Digital Cellular Alarm Radio Trnsmission Device	0.0180	0.1100	0.1100
1	SPSRL-15	Speaker Strobe Wall, 24 VDC, Multi-Candela, 15 cd, 25/70 Vrms, red	0.0000	0.0430	0.0430
6	SPSRL-110	Speaker Strobe Wall, 24 VDC, Multi-Candela, 110 cd, 25/70 Vrms, red	0.0000	0.1480	0.8880
13	SPSCRL-15	Speaker Strobe Ceiling, 24 VDC, Multi-Candela, 15 cd, 25/70 Vrms, red	0.0000	0.0410	0.5330
10	SPSCRL-30	Speaker Strobe Ceiling, 24 VDC, Multi-Candela, 30 cd, 25/70 Vrms, red	0.0000	0.0630	0.6300
9	SPSCRL-75	Speaker Strobe Ceiling, 24 VDC, Multi-Candela, 75 cd, 25/70 Vrms, red	0.0000	0.1110	0.9990
7	SPSCRL-115	Speaker Strobe Ceiling, 24 VDC, Multi-Candela, 115 cd, 25/70 Vrms, red	0.0000	0.1580	1.1060
1	SPSRL-75	Speaker Strobe wall, 24 VDC, Multi-Candela, 75 cd, 25/70 Vrms, red	0.0000	0.1070	0.1070
10	MS-AF7	Addressable Double Action Pull Station	0.0030	0.0100	0.1000
4	MCS-COF	Adressable Multi-Criteria Fire/CO Detector (Ceiling)	0.0020	0.0900	0.3600
11	SD	Gamewell-FCI #ASD-PL2F Analog Addressable Smoke Sensor (Ceiling)	0.0033	0.0065	0.0715
2	HD	Gamewell-FCI #ATD-L2F Addressable Thermal Sensor (Ceiling)	0.0006	0.0065	0.0130
28	AM	Gamewell-FCI #AMM-4F Addressable Monitor Module	0.0105	0.0050	0.1400
31	CR	Gamewell-FCI #AOM-25F Addressable Control Module	0.0116	0.0065	0.2015
22	DD	Gamewell-FCI #DNR/ASD-PL2FR Duct Smoke Detector	0.0000	0.0120	0.2640
		VOICE EVACUATION SYSTEM SPEAKERS	SPEAKER WATTAGE		
32	SP-1/4W	Voice Evacuation Speakers (1W) Gamewell - FCI E60	0.2500		0.3333
42	SP-1/2W	Voice Evacuation Speakers (8W) Outdoor Gamewell - FCI ET1010	0.5000		0.8750
7	SP-1W	Voice Evacuation Speakers (1W) Gamewell - FCI E60	1.0000		0.2917
0	SP-2W	Voice Evacuation Speakers (8W) Outdoor Gamewell - FCI ET1010	2.0000		0.0000
		TOTALS	1.4750	4.0305	19.3030

TOTAL ALARM AMP-HOURS (15 MIN.) =	0.25	HR	x	19.303	A	=	4.8258	A-H
TOTAL STANDBY AMP-HOURS (24 HRS) =	24	HR	x	1.475	A	=	35.4006	A-H
TOTAL REQUIRED AMP-HOURS =						=	**40.2264**	**A-H**
TOTAL DESIGN AMP-HOURS WITH 25% SAFETY FACTOR =						=	**50.2829**	**A-H**
BATTERY CAPACITY REQUIREMENTS							**55.000**	**A-H**

TOTAL SPEAKER WATTAGE - AMP #1	=	**11.00 W**
REQUIRED AMPLIFIER WATTAGE (+25% INSERTION LOSS FACTOR)	=	**13.75 W**
SPECIFIED AMPLIFIER WATTAGE	=	**50.00 W**
TOTAL SPEAKER WATTAGE - AMP #2	=	**7.25 W**
REQUIRED AMPLIFIER WATTAGE (+25% INSERTION LOSS FACTOR)	=	**9.06 W**
SPECIFIED AMPLIFIER WATTAGE	=	**50.00 W**
TOTAL SPEAKER WATTAGE - AMP #3	=	**3.75 W**
REQUIRED AMPLIFIER WATTAGE (+25% INSERTION LOSS FACTOR)	=	**4.69 W**
SPECIFIED AMPLIFIER WATTAGE	=	**50.00 W**
TOTAL SPEAKER WATTAGE - AMP #4	=	**6.25 W**
REQUIRED AMPLIFIER WATTAGE (+25% INSERTION LOSS FACTOR)	=	**7.81 W**
SPECIFIED AMPLIFIER WATTAGE	=	**50.00 W**
TOTAL SPEAKER WATTAGE - AMP #5	=	**8.00 W**
REQUIRED AMPLIFIER WATTAGE (+25% INSERTION LOSS FACTOR)	=	**10.00 W**
SPECIFIED AMPLIFIER WATTAGE	=	**50.00 W**

FIRE ALARM BOOSTER PANEL 'FABP' BATTERY CALCULATIONS

QTY.	DEVICE	DESCRIPTION	STANDBY CURRENT	ALARM CURRENT/ DEVICE	ALARM CURRENT
1	HPF	Gamewell-FCI #HPF24S6 Power Expander	0.0020	0.0020	0.0020
10	SPSCRL-15	Speaker Strobe Ceiling, 24 VDC, Multi-Candela, 15 cd, 25/70 Vrms, red	0.0000	0.0410	0.4100
7	SPSCRL-30	Speaker Strobe Ceiling, 24 VDC, Multi-Candela, 30 cd, 25/70 Vrms, red	0.0000	0.0630	0.4410
11	SPSCRL-75	Speaker Strobe Ceiling, 24 VDC, Multi-Candela, 75 cd, 25/70 Vrms, red	0.0000	0.1110	1.2210
8	SPSCRL-115	Speaker Strobe Ceiling, 24 VDC, Multi-Candela, 115 cd, 25/70 Vrms, red	0.0000	0.1580	1.2640
4	MDL3R	Sync Module, two circuit Class B, 24 VDC	0.0400	0.0500	0.2000
		TOTALS	0.0420	0.4250	3.5380

TOTAL ALARM AMP-HOURS (15 MIN.) =	0.25	HR	x	3.538	A	=	0.8845	A-H
TOTAL STANDBY AMP-HOURS (24 HRS) =	24	HR	x	0.042	A	=	1.0080	A-H
TOTAL REQUIRED AMP-HOURS =						=	**1.8925**	**A-H**
TOTAL DESIGN AMP-HOURS WITH 25% SAFETY FACTOR =						=	**2.3656**	**A-H**
BATTERY CAPACITY REQUIREMENTS							**5.000**	**A-H**

dB LINE LOSS CALCULATION

SPEAKER VOLTAGE = 24

SPEAKERS	DEVICE POWER (WATTS)	SIGNAL CKT S1 QTY.	SIGNAL CKT S1 WATTS	SIGNAL CKT S2 QTY.	SIGNAL CKT S2 WATTS	SPEAKER QTY TOTAL.	MIN. AMPLIFIER SIZE (WATTS)
SPEAKER - 1/4 WATT TAP	0.25	2	0.5	4	1	6	
SPEAKER - 1/2 WATT TAP	0.5	2	1	7	3.5	9	
SPEAKER - 1 WATT TAP	1	5	5	0	0	5	**13.2**
SPEAKER - 2 WATT TAP	2	0	0	0	0	0	
TOTAL POWER ON CKT (P) WATTS			6.5		4.5		
LOAD RESISTANCE (LR) OHMS			89		128		
TOTAL WIRE LENGTH (D) FT			295		265		
WIRE SIZE			14 AWG		14 AWG		
TOTAL WIRE RESISTANCE (WR) OHMS			1.9234		1.7278		
POWER LOSS (PL) dB			**-0.1**		**-0.06**		

FORMULAS

WIRE RESISTANCE (R) (OHMS/Kft)*		
18 AWG	=	8.08
16 AWG	=	5.08
14 AWG	=	3.26
12 AWG	=	2.05
*VALUES PER NFPA 70		

TOTAL WIRE RESISTANCE (WR) = (R / 1000) * D

LOAD RESISTANCE (LR) = (SPEAKER VOLTAGE)^2 / P

POWER LINE LOSS (PL) = 10 * LOG (1- (WR / (WR+LR)))

dB LINE LOSS CALCULATION

SPEAKER VOLTAGE = 24

SPEAKERS	DEVICE POWER (WATTS)	SIGNAL CKT S3 QTY.	SIGNAL CKT S3 WATTS	SIGNAL CKT S4 QTY.	SIGNAL CKT S4 WATTS	SPEAKER QTY TOTAL.	MIN. AMPLIFIER SIZE (WATTS)
SPEAKER - 1/4 WATT TAP	0.25	2	0.5	7	1.75	9	
SPEAKER - 1/2 WATT TAP	0.5	7	3.5	1	0.5	8	
SPEAKER - 1 WATT TAP	1	0	0	1	1	1	**8.7**
SPEAKER - 2 WATT TAP	2	0	0	0	0	0	
TOTAL POWER ON CKT (P) WATTS			4		3.25		
LOAD RESISTANCE (LR) OHMS			144		178		
TOTAL WIRE LENGTH (D) FT			505		265		
WIRE SIZE			14 AWG		14 AWG		
TOTAL WIRE RESISTANCE (WR) OHMS			3.2926		1.7278		
POWER LOSS (PL) dB			**-0.1**		**-0.05**		

FORMULAS

WIRE RESISTANCE (R) (OHMS/Kft)*		
18 AWG	=	8.08
16 AWG	=	5.08
14 AWG	=	3.26
12 AWG	=	2.05
*VALUES PER NFPA 70		

TOTAL WIRE RESISTANCE (WR) = (R / 1000) * D

LOAD RESISTANCE (LR) = (SPEAKER VOLTAGE)^2 / P

POWER LINE LOSS (PL) = 10 * LOG (1- (WR / (WR+LR)))

dB LINE LOSS CALCULATION

SPEAKER VOLTAGE = 24

SPEAKERS	DEVICE POWER (WATTS)	SIGNAL CKT S5 QTY.	SIGNAL CKT S5 WATTS	SIGNAL CKT S6 (SPARE) QTY.	SIGNAL CKT S6 (SPARE) WATTS	SPEAKER QTY TOTAL.	MIN. AMPLIFIER SIZE (WATTS)
SPEAKER - 1/4 WATT TAP	0.25	1	0.25	0	0	1	
SPEAKER - 1/2 WATT TAP	0.5	7	3.5	0	0	7	
SPEAKER - 1 WATT TAP	1	0	0	0	0	0	**4.5**
SPEAKER - 2 WATT TAP	2	0	0	0	0	0	
TOTAL POWER ON CKT (P) WATTS			3.75		0		
LOAD RESISTANCE (LR) OHMS			154		0		
TOTAL WIRE LENGTH (D) FT			210		0		
WIRE SIZE			14 AWG		0		
TOTAL WIRE RESISTANCE (WR) OHMS			1.3692		0		
POWER LOSS (PL) dB			**-0.04**		0		

FORMULAS

WIRE RESISTANCE (R) (OHMS/Kft)*		
18 AWG	=	8.08
16 AWG	=	5.08
14 AWG	=	3.26
12 AWG	=	2.05
*VALUES PER NFPA 70		

TOTAL WIRE RESISTANCE (WR) = (R / 1000) * D

LOAD RESISTANCE (LR) = (SPEAKER VOLTAGE)^2 / P

POWER LINE LOSS (PL) = 10 * LOG (1- (WR / (WR+LR)))

dB LINE LOSS CALCULATION

SPEAKER VOLTAGE = 24

SPEAKERS	DEVICE POWER (WATTS)	SIGNAL CKT S7 QTY.	SIGNAL CKT S7 WATTS	SIGNAL CKT S8 QTY.	SIGNAL CKT S8 WATTS	SPEAKER QTY TOTAL.	MIN. AMPLIFIER SIZE (WATTS)
SPEAKER - 1/4 WATT TAP	0.25	5	1.25	4	1	9	
SPEAKER - 1/2 WATT TAP	0.5	4	2	4	2	8	
SPEAKER - 1 WATT TAP	1	0	0	0	0	0	**7.5**
SPEAKER - 2 WATT TAP	2	0	0	0	0	0	
TOTAL POWER ON CKT (P) WATTS			3.25		3		
LOAD RESISTANCE (LR) OHMS			178		192		
TOTAL WIRE LENGTH (D) FT			245		220		
WIRE SIZE			14 AWG		14 AWG		
TOTAL WIRE RESISTANCE (WR) OHMS			1.5974		1.4344		
POWER LOSS (PL) dB			**-0.04**		**-0.04**		

FORMULAS

WIRE RESISTANCE (R) (OHMS/Kft)*		
18 AWG	=	8.08
16 AWG	=	5.08
14 AWG	=	3.26
12 AWG	=	2.05
*VALUES PER NFPA 70		

TOTAL WIRE RESISTANCE (WR) = (R / 1000) * D

LOAD RESISTANCE (LR) = (SPEAKER VOLTAGE)^2 / P

POWER LINE LOSS (PL) = 10 * LOG (1- (WR / (WR+LR)))

dB LINE LOSS CALCULATION

SPEAKER VOLTAGE = 24

SPEAKERS	DEVICE POWER (WATTS)	SIGNAL CKT S9 QTY.	SIGNAL CKT S9 WATTS	SIGNAL CKT S10 QTY.	SIGNAL CKT S10 WATTS	SPEAKER QTY TOTAL.	MIN. AMPLIFIER SIZE (WATTS)
SPEAKER - 1/4 WATT TAP	0.25	2	0.5	6	1.5	8	
SPEAKER - 1/2 WATT TAP	0.5	7	3.5	3	1.5	10	
SPEAKER - 1 WATT TAP	1	0	0	1	1	1	**9.6**
SPEAKER - 2 WATT TAP	2	0	0	0	0	0	
TOTAL POWER ON CKT (P) WATTS			4		4		
LOAD RESISTANCE (LR) OHMS			144		144		
TOTAL WIRE LENGTH (D) FT			440		275		
WIRE SIZE			14 AWG		14 AWG		
TOTAL WIRE RESISTANCE (WR) OHMS			2.8688		1.793		
POWER LOSS (PL) dB			**-0.09**		**-0.06**		

FORMULAS

WIRE RESISTANCE (R) (OHMS/Kft)*		
18 AWG	=	8.08
16 AWG	=	5.08
14 AWG	=	3.26
12 AWG	=	2.05
*VALUES PER NFPA 70		

TOTAL WIRE RESISTANCE (WR) = (R / 1000) * D

LOAD RESISTANCE (LR) = (SPEAKER VOLTAGE)^2 / P

POWER LINE LOSS (PL) = 10 * LOG (1- (WR / (WR+LR)))

NAC 'N1' VOLTAGE DROP CALCULATION

QTY.	DEVICE	DESCRIPTION	ALARM CURRENT/ DEVICE	TOTAL ALARM CURRENT
4	SPSCRL-30	Speaker Strobe Ceiling, 24 VDC, Multi-Candela, 30 cd, 25/70 Vrms, red	0.0630	0.2520
5	SPSRL-110	Speaker Strobe Wall, 24 VDC, Multi-Candela, 110 cd, 25/70 Vrms, red	0.1480	0.7400
		TOTAL CURRENT ADDED TO CIRCUIT	0.211	0.992

LENGTH OF WIRE FROM FACP TO LAST DEVICE (IN FEET) = **295**
ACTUAL SIZE OF WIRE INSTALLED = **12** A... **6530** CIRCULAR MILS
CALCULATED VOLTAGE DROP (IN VDC) = **0.968**

CIRCUIT VOLTAGE CALCULATED AT
LAST DEVICE (IN VDC) = **23 VDC**

PERCENT VOLTAGE DROP (%) = **4.03 %**
VOLTAGE DROP FORMULA:
VOLTAGE DROP = 2 X 10.8 x LENGTH OF CIRCUIT TO FARTHEST DEVICE x CURRENT
WIRE SIZE IN C.M.
COMPUTED WITH TOTAL CURRENT ON CIRCUIT AT MAXIMUM LENGTH (CLASS A CIRCUIT).

NAC 'N2' VOLTAGE DROP CALCULATION

QTY.	DEVICE	DESCRIPTION	ALARM CURRENT/ DEVICE	TOTAL ALARM CURRENT
4	SPSCRL-15	Speaker Strobe Ceiling, 24 VDC, Multi-Candela, 15 cd, 25/70 Vrms, red	0.0410	0.1640
2	SPSCRL-30	Speaker Strobe Ceiling, 24 VDC, Multi-Candela, 30 cd, 25/70 Vrms, red	0.0630	0.1260
5	SPSCRL-75	Speaker Strobe Ceiling, 24 VDC, Multi-Candela, 75 cd, 25/70 Vrms, red	0.1110	0.5550
		TOTAL CURRENT ADDED TO CIRCUIT	0.215	0.845

LENGTH OF WIRE FROM FACP TO LAST DEVICE (IN FEET) = **265**
ACTUAL SIZE OF WIRE INSTALLED = **12** A... **6530** CIRCULAR MILS
CALCULATED VOLTAGE DROP (IN VDC) = **0.741**

CIRCUIT VOLTAGE CALCULATED AT
LAST DEVICE (IN VDC) = **23.3 VDC**

PERCENT VOLTAGE DROP (%) = **3.09 %**
VOLTAGE DROP FORMULA:
VOLTAGE DROP = 2 X 10.8 x LENGTH OF CIRCUIT TO FARTHEST DEVICE x CURRENT
WIRE SIZE IN C.M.
COMPUTED WITH TOTAL CURRENT ON CIRCUIT AT MAXIMUM LENGTH (CLASS A CIRCUIT).

NAC 'N3' VOLTAGE DROP CALCULATION

QTY.	DEVICE	DESCRIPTION	ALARM CURRENT/ DEVICE	TOTAL ALARM CURRENT
2	SPSCRL-15	Speaker Strobe Ceiling, 24 VDC, Multi-Candela, 15 cd, 25/70 Vrms, red	0.0410	0.0820
6	SPSCRL-115	Speaker Strobe Ceiling, 24 VDC, Multi-Candela, 115 cd, 25/70 Vrms, red	0.1580	0.9480
		TOTAL CURRENT ADDED TO CIRCUIT	0.199	1.030

LENGTH OF WIRE FROM FACP TO LAST DEVICE (IN FEET) = **495**
ACTUAL SIZE OF WIRE INSTALLED = **12** A... **6530** CIRCULAR MILS
CALCULATED VOLTAGE DROP (IN VDC) = **1.686**

CIRCUIT VOLTAGE CALCULATED AT
LAST DEVICE (IN VDC) = **22.3 VDC**

PERCENT VOLTAGE DROP (%) = **7.03 %**
VOLTAGE DROP FORMULA:
VOLTAGE DROP = 2 X 10.8 x LENGTH OF CIRCUIT TO FARTHEST DEVICE x CURRENT
WIRE SIZE IN C.M.
COMPUTED WITH TOTAL CURRENT ON CIRCUIT AT MAXIMUM LENGTH (CLASS A CIRCUIT).

NAC 'N4' VOLTAGE DROP CALCULATION

QTY.	DEVICE	DESCRIPTION	ALARM CURRENT/ DEVICE	TOTAL ALARM CURRENT
7	SPSCRL-15	Speaker Strobe Ceiling, 24 VDC, Multi-Candela, 15 cd, 25/70 Vrms, red	0.0410	0.2870
1	SPSCRL-75	Speaker Strobe Ceiling, 24 VDC, Multi-Candela, 75 cd, 25/70 Vrms, red	0.1110	0.1110
1	SPSRL-110	Speaker Strobe Wall, 24 VDC, Multi-Candela, 110 cd, 25/70 Vrms, red	0.1480	0.1480
		TOTAL CURRENT ADDED TO CIRCUIT	0.300	0.546

LENGTH OF WIRE FROM FACP TO LAST DEVICE (IN FEET) = **265**
ACTUAL SIZE OF WIRE INSTALLED = **12** A... **6530** CIRCULAR MILS
CALCULATED VOLTAGE DROP (IN VDC) = **0.479**

CIRCUIT VOLTAGE CALCULATED AT
LAST DEVICE (IN VDC) = **23.5 VDC**

PERCENT VOLTAGE DROP (%) = **1.99 %**
VOLTAGE DROP FORMULA:
VOLTAGE DROP = 2 X 10.8 x LENGTH OF CIRCUIT TO FARTHEST DEVICE x CURRENT
WIRE SIZE IN C.M.
COMPUTED WITH TOTAL CURRENT ON CIRCUIT AT MAXIMUM LENGTH (CLASS A CIRCUIT).

NAC 'N5' VOLTAGE DROP CALCULATION

QTY.	DEVICE	DESCRIPTION	ALARM CURRENT/ DEVICE	TOTAL ALARM CURRENT
1	SPSRL-15	Speaker Strobe Wall, 24 VDC, Multi-Candela, 15 cd, 25/70 Vrms, red	0.0430	0.0430
4	SPSCRL-30	Speaker Strobe Ceiling, 24 VDC, Multi-Candela, 30 cd, 25/70 Vrms, red	0.0630	0.2520
3	SPSCRL-75	Speaker Strobe Ceiling, 24 VDC, Multi-Candela, 75 cd, 25/70 Vrms, red	0.1110	0.3330
		TOTAL CURRENT ADDED TO CIRCUIT	0.217	0.628

LENGTH OF WIRE FROM FACP TO LAST DEVICE (IN FEET) = **210**
ACTUAL SIZE OF WIRE INSTALLED = **12** A... **6530** CIRCULAR MILS
CALCULATED VOLTAGE DROP (IN VDC) = **0.436**

CIRCUIT VOLTAGE CALCULATED AT
LAST DEVICE (IN VDC) = **23.6 VDC**

PERCENT VOLTAGE DROP (%) = **1.82 %**
VOLTAGE DROP FORMULA:
VOLTAGE DROP = 2 X 10.8 x LENGTH OF CIRCUIT TO FARTHEST DEVICE x CURRENT
WIRE SIZE IN C.M.
COMPUTED WITH TOTAL CURRENT ON CIRCUIT AT MAXIMUM LENGTH (CLASS A CIRCUIT).

NAC 'N7' VOLTAGE DROP CALCULATION

QTY.	DEVICE	DESCRIPTION	ALARM CURRENT/ DEVICE	TOTAL ALARM CURRENT
3	SPSCRL-15	Speaker Strobe Ceiling, 24 VDC, Multi-Candela, 15 cd, 25/70 Vrms, red	0.0410	0.1230
3	SPSCRL-30	Speaker Strobe Ceiling, 24 VDC, Multi-Candela, 30 cd, 25/70 Vrms, red	0.0630	0.1890
3	SPSCRL-75	Speaker Strobe Ceiling, 24 VDC, Multi-Candela, 75 cd, 25/70 Vrms, red	0.1110	0.3330
		TOTAL CURRENT ADDED TO CIRCUIT	0.215	0.645

LENGTH OF WIRE FROM FACP TO LAST DEVICE (IN FEET) = **230**
ACTUAL SIZE OF WIRE INSTALLED = **12** A... **6530** CIRCULAR MILS
CALCULATED VOLTAGE DROP (IN VDC) = **0.491**

CIRCUIT VOLTAGE CALCULATED AT
LAST DEVICE (IN VDC) = **23.5 VDC**

PERCENT VOLTAGE DROP (%) = **2.04 %**
VOLTAGE DROP FORMULA:
VOLTAGE DROP = 2 X 10.8 x LENGTH OF CIRCUIT TO FARTHEST DEVICE x CURRENT
WIRE SIZE IN C.M.
COMPUTED WITH TOTAL CURRENT ON CIRCUIT AT MAXIMUM LENGTH (CLASS A CIRCUIT).

NAC 'N8' VOLTAGE DROP CALCULATION

QTY.	DEVICE	DESCRIPTION	ALARM CURRENT/ DEVICE	TOTAL ALARM CURRENT
3	SPSCRL-15	Speaker Strobe Ceiling, 24 VDC, Multi-Candela, 15 cd, 25/70 Vrms, red	0.0410	0.1230
1	SPSCRL-30	Speaker Strobe Ceiling, 24 VDC, Multi-Candela, 30 cd, 25/70 Vrms, red	0.0630	0.0630
4	SPSCRL-75	Speaker Strobe Ceiling, 24 VDC, Multi-Candela, 75 cd, 25/70 Vrms, red	0.1110	0.4440
		TOTAL CURRENT ADDED TO CIRCUIT	0.215	0.630

LENGTH OF WIRE FROM FACP TO LAST DEVICE (IN FEET) = **205**
ACTUAL SIZE OF WIRE INSTALLED = **12** A... **6530** CIRCULAR MILS
CALCULATED VOLTAGE DROP (IN VDC) = **0.427**

CIRCUIT VOLTAGE CALCULATED AT
LAST DEVICE (IN VDC) = **23.6 VDC**

PERCENT VOLTAGE DROP (%) = **1.78 %**
VOLTAGE DROP FORMULA:
VOLTAGE DROP = 2 X 10.8 x LENGTH OF CIRCUIT TO FARTHEST DEVICE x CURRENT
WIRE SIZE IN C.M.
COMPUTED WITH TOTAL CURRENT ON CIRCUIT AT MAXIMUM LENGTH (CLASS A CIRCUIT).

NAC 'N9' VOLTAGE DROP CALCULATION

QTY.	DEVICE	DESCRIPTION	ALARM CURRENT/ DEVICE	TOTAL ALARM CURRENT
2	SPSCRL-30	Speaker Strobe Ceiling, 24 VDC, Multi-Candela, 30 cd, 25/70 Vrms, red	0.0630	0.1260
6	SPSCRL-115	Speaker Strobe Ceiling, 24 VDC, Multi-Candela, 115 cd, 25/70 Vrms, red	0.1580	0.9480
1	SPSRL-75	Speaker Strobe wall, 24 VDC, Multi-Candela, 75 cd, 25/70 Vrms, red	0.1070	0.1070
		TOTAL CURRENT ADDED TO CIRCUIT	0.328	1.181

LENGTH OF WIRE FROM FACP TO LAST DEVICE (IN FEET) = **425**
ACTUAL SIZE OF WIRE INSTALLED = **12** A... **6530** CIRCULAR MILS
CALCULATED VOLTAGE DROP (IN VDC) = **1.660**

CIRCUIT VOLTAGE CALCULATED AT
LAST DEVICE (IN VDC) = **22.3 VDC**

PERCENT VOLTAGE DROP (%) = **6.92 %**
VOLTAGE DROP FORMULA:
VOLTAGE DROP = 2 X 10.8 x LENGTH OF CIRCUIT TO FARTHEST DEVICE x CURRENT
WIRE SIZE IN C.M.
COMPUTED WITH TOTAL CURRENT ON CIRCUIT AT MAXIMUM LENGTH (CLASS A CIRCUIT).

NAC 'N10' VOLTAGE DROP CALCULATION

QTY.	DEVICE	DESCRIPTION	ALARM CURRENT/ DEVICE	TOTAL ALARM CURRENT
4	SPSCRL-15	Speaker Strobe Ceiling, 24 VDC, Multi-Candela, 15 cd, 25/70 Vrms, red	0.0410	0.1640
2	SPSCRL-30	Speaker Strobe Ceiling, 24 VDC, Multi-Candela, 30 cd, 25/70 Vrms, red	0.0630	0.1260
4	SPSCRL-75	Speaker Strobe Ceiling, 24 VDC, Multi-Candela, 75 cd, 25/70 Vrms, red	0.1110	0.4440
		TOTAL CURRENT ADDED TO CIRCUIT	0.215	0.734

LENGTH OF WIRE FROM FACP TO LAST DEVICE (IN FEET) = **260**
ACTUAL SIZE OF WIRE INSTALLED = **12** A... **6530** CIRCULAR MILS
CALCULATED VOLTAGE DROP (IN VDC) = **0.631**

CIRCUIT VOLTAGE CALCULATED AT
LAST DEVICE (IN VDC) = **23.4 VDC**

PERCENT VOLTAGE DROP (%) = **2.63 %**
VOLTAGE DROP FORMULA:
VOLTAGE DROP = 2 X 10.8 x LENGTH OF CIRCUIT TO FARTHEST DEVICE x CURRENT
WIRE SIZE IN C.M.
COMPUTED WITH TOTAL CURRENT ON CIRCUIT AT MAXIMUM LENGTH (CLASS A CIRCUIT).

IDENTIFICATION STAMP
DIV. OF THE STATE ARCHITECT
APP: 02-122821 INC: 2
REVIEWED FOR
SS ☑ FLS ☑ ACS ☑
DATE: 11/20/2025

Teter, Inc. expressly reserves its common law copyright and other property rights in these plans. This document, the ideas and designs incorporated herein, as an instrument of professional service, is not to be used in whole or in part, for any other project without prior written authorization.

MARK	DATE	DESCRIPTION
A	11/13/2025	DSA BACKCHECK

08/21/2025

TETER, INC.
FRESNO HEADQUARTERS
VISALIA | BAKERSFIELD | MODESTO | SAN LUIS OBISPO
ARCHITECTS ENGINEERS CONNECTED

VISALIA CAMPUS UNIVERSITY CENTER
COLLEGE OF THE SEQUOIAS
915 S. MOONEY BLVD
VISALIA, CA

DRAWING TITLE
FIRE ALARM BATTERY AND VOLTAGE DROP CALCULATIONS

PROJECT NO.
22-12498

DRAWING
E711.2

\\tet-file1\Users\gene.vea_TETR\Documents\12498-E-UC_gene.vea.rvt

CODES, RULES & REGULATIONS

ALL WORK SHOWN HEREIN SHALL COMPLY WITH THE CURRENT REGULATIONS OF THE CALIFORNIA STATE FIRE MARSHAL, CALIFORNIA BUILDING CODE, TITLES 8 AND 19 THROUGH 24, SERVING UTILITY RULES AND ALL OTHER APPLICABLE STATE ORDINANCES. NOTHING IN THESE PLANS OR SPECIFICATIONS SHALL BE INTERPRETED AS TO PERMIT ANY WORK NOT IN CONFORMANCE WITH THESE CODES, RULES AND REGULATIONS. WHERE WORK OF A GREATER DEGREE IS INDICATED IN THESE PLANS OR SPECIFICATIONS, THAT REQUIREMENT SHALL GOVERN SUCH WORK.

C.E.C. TITLE 24 COMPLIANCE

THE LIGHTING AND LIGHTING CONTROL SYSTEMS DESIGN DEPICTED HEREIN IS IN COMPLIANCE WITH REQUIREMENTS OF THE CURRENT CALIFORNIA ENERGY COMMISSION EFFICIENCY STANDARDS FOR NONRESIDENTIAL BUILDINGS.

GENERAL NOTES (TYPICAL)

1. REFER TO THE ARCHITECTURAL REFLECTED CEILING PLAN FOR THE EXACT LOCATION OF ALL CEILING MOUNTED ELECTRICAL EQUIPMENT.
2. REFER TO THE MECHANICAL AND PLUMBING PLANS FOR THE EXACT LOCATION OF ALL MECHANICAL, HVAC AND PLUMBING EQUIPMENT.
3. VERIFY THE EXACT LOCATION OF ALL FLOOR BOXES AND ASSOCIATED TRENCH, BACKFILL AND SAWCUTTING REQUIREMENTS WITH THE ARCHITECT PRIOR TO COMMENCEMENT OF ANY ROUGH -IN WORK FOR THIS EQUIPMENT.
4. COORDINATE ELECTRICAL PANEL AND TERMINAL CABINET LOCATIONS AND ROUTING OF UNDERGROUND CONDUITS WITH THE ARCHITECTURAL AND STRUCTURAL DRAWINGS PRIOR TO COMMENCEMENT OF ANY ROUGH-IN WORK FOR THIS EQUIPMENT.
5. COORDINATE ALL ELECTRICAL WORK WITH OTHER TRADES WHOSE WORK WILL IMPACT PLACEMENT OR CONNECTION OF ELECTRICALLY POWERED EQUIPMENT REGARDLESS OF RESPONSIBILITY FOR SUPPLYING EQUIPMENT.

MEP COMPONENT ANCHORAGE NOTE

ALL MECHANICAL, PLUMBING, AND ELECTRICAL COMPONENTS SHALL BE ANCHORED AND INSTALLED PER THE DETAILS ON THE DSA APPROVED CONSTRUCTION DOCUMENTS. THE FOLLOWING COMPONENTS SHALL BE ANCHORED OR BRACED TO MEET THE FORCE AND DISPLACEMENT REQUIREMENTS PRESCRIBED IN THE 2022 CBC, SECTIONS 1617A.1.18 THROUGH 1617A.1.26 AND ASCE 7-16 CHAPTERS 13, 26 AND 30.

1. ALL PERMANENT EQUIPMENT AND COMPONENTS.
2. TEMPORARY, MOVEABLE OR MOBILE EQUIPMENT THAT IS PERMANENTLY ATTACHED (E.G. HARD WIRED) TO THE BUILDING UTILITY SERVICES SUCH AS ELECTRICITY, GAS OR WATER. "PERMANENTLY ATTACHED" SHALL INCLUDE ALL ELECTRICAL CONNECTIONS EXCEPT PLUGS FOR 110/220 VOLT RECEPTACLES HAVING FLEXIBLE CABLE.
3. TEMPORARY, MOVABLE OR MOBILE EQUIPMENT EQUIPMENT WHICH IS HEAVIER THAN 400 POUNDS OR HAS A CENTER OF MASS LOCATED 4 FEET OR MORE ABOVE THE ADJACENT FLOOR OR ROOF LEVEL THAT DIRECTLY SUPPORT THE COMPONENT IS REQUIRED TO BE RESTRAINED IN A MANNER APPROVED BY DSA.

THE FOLLOWING MECHANICAL AND ELECTRICAL COMPONENTS SHALL BE POSITIVELY ATTACHED TO THE STRUCTURE BUT NEED NOT DEMONSTRATE DESIGN COMPLIANCE WITH THE REFERENCES NOTED ABOVE. THESE COMPONENTS SHALL HAVE FLEXIBLE CONNECTIONS PROVIDED BETWEEN THE COMPONENT AND ASSOCIATED DUCTWORK, PIPING, AND CONDUIT. FLEXIBLE CONNECTIONS MUST ALLOW MOVEMENT IN BOTH TRANSVERSE AND LONGITUDINAL DIRECTIONS:

A. COMPONENTS WEIGHING LESS THAN 400 POUNDS AND HAVE A CENTER OF MASS LOCATED 4 FEET OR LESS ABOVE THE ADJACENT FLOOR OR ROOF LEVEL THAT DIRECTLY SUPPORT THE COMPONENT.

B. COMPONENTS WEIGHING LESS THAN 20 POUNDS, OR IN THE CASE OF DISTRIBUTED SYSTEMS, LESS THAN 5 POUNDS PER FOOT, WHICH ARE SUSPENDED FROM A ROOF OR FLOOR OR HUNG FROM A WALL.

THE ANCHORAGE OF ALL MECHANICAL, ELECTRICAL AND PLUMBING COMPONENTS SHALL BE SUBJECT TO THE APPROVAL OF THE DESIGN PROFESSIONAL IN GENERAL RESPONSIBLE CHARGE OR STRUCTURAL ENGINEER DELEGATED RESPONSIBILITY AND ACCEPTANCE BY DSA. THE PROJECT INSPECTOR WILL VERIFY THAT ALL COMPONENTS AND EQUIPMENT HAVE BEEN ANCHORED IN ACCORDANCE WITH THE ABOVE REQUIREMENTS.

PIPING, DUCTWORK, AND ELECTRICAL DISTRIBUTION SYSTEM BRACING NOTE:

PIPING, DUCTWORK, AND ELECTRICAL DISTRIBUTION SYSTEMS SHALL BE BRACED TO COMPLY WITH THE FORCES AND DISPLACEMENTS PRESCRIBED IN ASCE 7-16 SECTION 13.3 AS DEFINED IN ASCE 7-16 SECTION 13.6.5, 13.6.6, 13.6.7, 13.6.8; AND 2022 CBC, SECTIONS 1617A.1.24, 1617A.1.25, AND 1617A.1.26.

THE METHOD OF SHOWING BRACING AND ATTACHMENTS TO THE STRUCTURE FOR THE IDENTIFIED DISTRIBUTION SYSTEM ARE AS NOTED BELOW. WHEN BRACING AND ATTACHMENTS ARE BASED ON A PREAPPROVED INSTALLATION GUIDE (E.G., HCAi OPM FOR 2013 CBC OR LATER), COPIES OF THE BRACING SYSTEM INSTALLATION GUIDE OR MANUAL SHALL BE AVAILABLE ON THE JOBSITE PRIOR TO THE START OF AND DURING THE HANGING AND BRACING OF THE DISTRIBUTION SYSTEMS. THE STRUCTURAL ENGINEER OF RECORD SHALL VERIFY THE ADEQUACY OF THE STRUCTURE TO SUPPORT THE HANGER AND BRACE LOADS.

MECHANICAL PIPING (MP), MECHANICAL DUCTS (MD), PLUMBING PIPING (PP), ELECTRICAL DISTRIBUTION SYSTEM (E):

MP ☐ MD ☐ PP ☐ E ☒ OPTION 1: DETAILED ON THE APPROVED DRAWINGS WITH SPECIFIC NOTES AND DETAILS.

GENERAL NOTES N.T.S. 29

LIGHTING FIXTURE SCHEDULE

FIXTURE DESIGNATION	FIXTURE VOLTAGE	FIXTURE WATTAGE	MOUNTING	DRIVER & COLOR TEMP	DESCRIPTION	MANUFACTURER	CATALOG #
A1	277 V	26	RECESSED PER 3/E603.2	LED - 4000K (0-10VDC DIMMING)	2' X 4' TROFFER LED NLIGHT ENABLED	MARK	WHSPR-2X4-80CRI-40K-3500LM-MIN1-MVOLT-YBC-NLIGHT
A1E	277 V	26	RECESSED PER 3/E603.2	LED - 4000K (0-10VDC DIMMING)	2' X 4' TROFFER LED NLIGHT ENABLED WITH INTEGRAL T20 COMPLIANT EMERGENCY BATTERY PACK	MARK	WHSPR-2X4-80CRI-40K-3500LM-MIN1-MVOLT-YBC-NLIGHT-E10WLCP
B1	277 V	47	RECESSED PER 11/E603.2	LED - 4000K (0-10VDC DIMMING)	6" RECESSED SQUARE CAN LIGHT	GOTHAM	EVO6SQ-40/45-AR-LSS-MVOLT-EZ10
B1E	277 V	47	RECESSED PER 11/E603.2	LED - 4000K (0-10VDC DIMMING)	6" RECESSED SQUARE CAN LIGHT	GOTHAM	EVO6SQ-40/45-AR-LSS-MVOLT-EZ1
B2	277 V	30	RECESSED PER 11/E603.2	LED - 4000K (0-10VDC DIMMING)	6" RECESSED SQUARE CAN LIGHT	GOTHAM	EVO6SQ-40/30-AR-LSS-MVOLT-EZ10
B2E	277 V	30	RECESSED PER 11/E603.2	LED - 4000K (0-10VDC DIMMING)	6" RECESSED SQUARE CAN LIGHT W/ INTEGRAL EMERGENCY BATTERY PACK	GOTHAM	EVO6SQ-40/30-AR-LSS-MVOLT-EZ10 - E10WCP
B3	277 V	25	RECESSED PER 11/E603.2	LED - 4000K (0-10VDC DIMMING)	6" RECESSED SQUARE CAN LIGHT - OUTDOOR	GOTHAM	EVO6SQ-40/25-AR-LSS-MVOLT-EZ10
B3E	277 V	25	RECESSED PER 11/E603.2	LED - 4000K (0-10VDC DIMMING)	6" RECESSED SQUARE CAN LIGHT - OUTDOOR	GOTHAM	EVO6SQ-40/25-AR-LSS-MVOLT-EZ10-E10WCP
C1	277 V	32	RECESSED PER 15/E603.2	LED - 4000K (0-10VDC DIMMING)	4' RECESSED LINEAR (T-GRID)	MARK	SL4L-LOP-4FT-FLP-TG-80CRI-40K-800LMF-MIN10-277-NLIGHT
C1E	277 V	32	RECESSED PER 15/E603.2	LED - 4000K (0-10VDC DIMMING)	4' RECESSED LINEAR W/ INTEGRAL EMERGENCY BATTERY PACK (T-GRID)	MARK	SL4L-LOP-4FT-FLP-TG-80CRI-40K-800LMF-MIN10-277-E10WLCP-NLIGHT
C2	277 V	48	RECESSED PER 15/E603.2	LED - 4000K (0-10VDC DIMMING)	6' RECESSED LINEAR (T-GRID)	MARK	SL4L-LOP-6FT-FLP-TG-80CRI-40K-800LMF-MIN10-277-NLIGHT
C2E	277 V	48	RECESSED PER 15/E603.2	LED - 4000K (0-10VDC DIMMING)	6' RECESSED LINEAR W/ INTEGRAL EMERGENCY BATTERY PACK (T-GRID)	MARK	SL4L-LOP-6FT-FLP-TG-80CRI-40K-800LMF-MIN10-277-E10WLCP-NLIGHT
C3	277 V	280	FLANGELESS RECESSED GYPBOARD INSTALLATION PER ARCHITECTURAL DETAIL 4/A843.2	LED - 4000K (0-10VDC DIMMING)	33'-10" RECESSED LINEAR (FOR TRIMLESS SHEETROCK INSTALLATION)	MARK	SL4L-LOP-33FT10"-FLP-GB-80CRI-40K-800LMF-MIN10-277
C4	277 V	968	FLANGELESS RECESSED GYPBOARD INSTALLATION PER ARCHITECTURAL DETAIL 4/A843.2	LED - 4000K (0-10VDC DIMMING)	120'-6" RECESSED LINEARSEVEN 4-FOOT EMERGENCY SECTIONS SHALL BEGIN 16-FEET FROM END AND BE SPACED EVERY 16-FEET THEREAFTER (FOR TRIMLESS SHEETROCK INSTALLATION)	MARK	SL4L-LOP-120FT6"-FLP-GB-80CRI-40K-800LMF-MIN10-277-*7E10WLCP
C5	277 V	984	FLANGELESS RECESSED GYPBOARD INSTALLATION PER ARCHITECTURAL DETAIL 4/A843.2	LED - 4000K (0-10VDC DIMMING)	122'-9" RECESSED LINEAR SEVEN 4-FOOT EMERGENCY SECTIONS SHALL BEGIN 4-FEET FROM END AND BE SPACED EVERY 16-FEET THEREAFTER (FOR TRIMLESS SHEETROCK INSTALLATION)	MARK	SL4L-LOP-122FT9"-FLP-GB-80CRI-40K-800LMF-MIN10-277-*7E10WLCP
C6	277 V	1472	FLANGELESS RECESSED GYPBOARD INSTALLATION PER ARCHITECTURAL DETAIL 4/A843.2	LED - 4000K (0-10VDC DIMMING)	18-'8" SEGMENT+160-DEGREE INSIDE ANGLE SEGMENT+163'-2" SEGMENT RECESSED LINEAR WITH NINE 4-FOOT EMERGENCY BATTERY PACK SECTIONS EQUALLY SPACED ALONG 163FT-2" STRAIGHT SEGMENT (FOR TRIMLESS SHEETROCK INSTALLATION)	MARK	SL4L-LOP-18FT8"+160-DEGREE INSIDE ANGLE+163FT2"-FLP-GB-80CRI-40K-800LMF-MIN10-277-*9E10WLCP
D1	277 V	27	SURFACE PER 4/E603.2	LED - 4000K (0-10VDC DIMMING)	1' X 4' SURFACE LED	LITHONIA	STL4-30L-EZ1-LP840
D1E	277 V	27	SURFACE PER 4/E603.2	LED - 4000K (0-10VDC DIMMING)	1' X 4' SURFACE LED W/ INTEGRAL EMERGENCY BATTERY PACK	LITHONIA	STL4-30L-EZ1-LP840-E10WLCP
D2	277 V	24	SURFACE PER -/E600	LED - 4000K	VAPOR TIGHT LED STRIP LIGHT WITH INTEGRATED MOTION SENSOR AND PHOTOCELL	LITHONIA	CVST-L48-3000LM-MVOLT-40K-80CRI-SBOR10P
D3	277 V	27	VARIES PER KEYNOTES	LED - 4000K (0-10VDC DIMMING)	1' X 4' SURFACE LED - UNISTRUT MOUNT	LITHONIA	STL4-30L-EZ1-LP840
D3E	277 V	27	VARIES PER KEYNOTES	LED - 4000K (0-10VDC DIMMING)	1' X 4' SURFACE LED W/ INTEGRAL EMERGENCY BATTERY PACK - UNISTRUT MOUNT	LITHONIA	STL4-30L-EZ1-LP840-E10WLCP
D4	277 V	39	SURFACE PER 4/E603.2	LED - 4000K	1' X 2' SURFACE LED	LITHONIA	STL2-40L-MVOLT-EZ1-LP840
H1	277 V	5	RECESSED PER 10/E603.2	LED - 4000K	STEP LIGHT 6"	HYDRELL	HSL13-6"-LED-4000K-MVOLT-L-****
H2	120 V	3	RECESSED PER 13/E603.2	LED - 3000k	3"H X 5"W X2"D STEP LIGHT	MODERN FORMS	SL-LED100-30-***
P6	120 V	14	MOUNT PER 9/E603.2	LED - 4000K	SOUCE FOUR MINI LED	ETC	4ML-40-80-120-C
R4	277 V	18	RECESSED PER 19/E603.2	LED - 4000K (0-10VDC DIMMING)	4' RECESSED LINEAR	PINNACLE	EV3D-HE-840-4'-FL(F)-U-EE1-1-0-S
R4E	277 V	18	RECESSED PER 19/E603.2	LED - 4000K (0-10VDC DIMMING)	4' RECESSED LINEAR W/ INTEGRAL EMERGENCY BATTERY PACK	PINNACLE	EV3D-HE-840-4'-FL(F)-U-EE1-1-0-IC-S
R6	277 V	27	RECESSED PER 17/E603.2	LED - 4000K (0-10VDC DIMMING)	6' RECESSED LINEAR - PERIMETER MOUNT SLOT T-BAR	PINNACLE	EV3DPM-HE-840-6'-PM-U-EE1-1-0-W
R11	277 V	18	RECESSED PER 18/E603.2	LED - 4000K (0-10VDC DIMMING)	4' RECESSED LINEAR - PERIMETER MOUNT HARDLID	PINNACLE	EV3D-HE-840-4'-PM-U-EE1-1-0-W
R14	277 V	64	RECESSED PER 18/E603.2	LED - 4000K (0-10VDC DIMMING)	14'-6" RECESSED LINEAR	PINNACLE	EV3D-HE-840-14'6"-PM-U-EE1-1-0-S
R16	277 V	70	RECESSED PER 18/E603.2	LED - 4000K (0-10VDC DIMMING)	16' RECESSED LINEAR	PINNACLE	EV3D-HE-840-16'-PM-U-EE1-1-0-S
R19	277 V	84	RECESSED PER 18/E603.2	LED - 4000K (0-10VDC DIMMING)	19' RECESSED LINEAR	PINNACLE	EV3D-HE-840-19'-PM-U-EE1-1-0-S
S1	277 V	68	POLE PER 23/E600.2	LED - 4000K	SINGLE HEAD POLE MOUNTED SITE LIGHT WITH INTEGRATED MOTION SENSOR + 17'-6" x 5" ROUND STRAIGHT STEEL POLE WITH EXTRA HANDHOLE AND COUPLER FOR MOTION SENSOR	LITHONIA	FIXTURE HEAD: DSX1 LED-P2-40K-80CRI-TM3-MVOLT-RPA-PIR-***; POLE RSS-17-6"-SB-DM19AS-CPL12/"xyD--EHH15D-***
S2	277 V	41	POLE PER 15/E600.2	LED - 3000K	SITE BOLLARD WITH INTEGRAL OCCUPANCY SENSOR	LIGMAN	UCO-10127-41W-1-W30-***-120/277- **(*ARCHITECT TO VERIFY COLOR)-OCC1-A14291 - (COLUMBUS 2)
T4	120 V	80	WALL PER 20/E603.2	LED - 4000K (0-10VDC DIMMING)	15' TRACK LIGHTING WITH 5 LIGHT FIXTURES	LUMENTURE	FIXTURE HEAD: T65-400H-1500-60-***-J; TRACK LUMENTURE JT1 TRACK
T5	120 V	187	CEILING PER 16/E603.2	LED - 4000K (0-10VDC DIMMING)	15' TRACK LIGHTING WITH 5 LIGHT FIXTURES	JUNO	LIGHT FIXTURE HEAD: R612L-TEK-40K-80CRI-PDIM-FL-BL; TRACK JUNO TEK SERIES
T6	120 V	217	CEILING PER 16/E603.2	LED - 4000K (0-10VDC DIMMING)	18' TRACK LIGHTING WITH 6 LIGHT FIXTURES	JUNO	LIGHT FIXTURE HEAD: R612L-TEK-40K-80CRI-PDIM-FL-BL; TRACK JUNO TEK SERIES
TL36	120 V	27	RECESSED PER 25/E603.2	LED - 4000K	36' LED TAPE LIGHT WITH FLUSH MOUNT TRIMLESS "MUD-IN" CHANNEL AND 96-WATT CLASS 2 120VAC-24VDC POWER SUPPLY	KELVIX	TAPE LIGHT: UNI1-WL-I-100-40K-24V-NA-FML-2C-6; CHANNEL AND LENS: CH0003-2-WH-EC-CH CON 02 180 (QTY6 FOR 36' LENGTH); POWER SUPPLY: MINI ULV96-M
U1	277 V	23	INGRADE PER 14/E603.2	LED - 4000K	6" LED IN-GRADE FIXTURE (WALLWASH)	HYDREL	IGF6-SS-LED-P1-80CRI-40K-MVOLT-WWD-0T-FLCSR-34S-ZT-BL
U2	277 V	23	INGRADE PER 14/E603.2	LED - 4000K	6" LED IN-GRADE FIXTURE (PLANTER)	HYDREL	IGF6-SS-LED-P1-80CRI-40K-MVOLT-60DEG-0T-FLC-34S-ISS-ZT-BL
U3	277 V	23	INGRADE PER 14/E603.2	LED - 4000K	6" LED IN-GRADE FIXTURE (COLUMN)	HYDREL	IGF6-SS-LED-P1-80CRI-40K-MVOLT-7DEG-5T-FLCSR-34S-ISS-ZT-BL
U4	277 V	25	INGRADE PER 14/E603.2	LED - 4000K	IN-GRADE FIXTURE (WALLWASH)	BEGA	BEGA 84618-K4-BLK
W1E	277 V	10	WALL PER PLAN	LED - 4000K	WALL MOUNTED FIXTURE W/ INTEGRAL EMERGENCY BATTERY PACK	LITHONIA	WDGE1 LED-P1-40K-80CRI-VW-MVOLT-E4WH-***
W2	120 V	11	WALL PER PLAN	LED - 4000K	DECORATIVE WALL FIXTURE	HYDREL	PLACER-A-P1-80CRI-40K-120-35DEG-FLC-CN5-DNA-S12-C3
W3	277 V	18	WALL PER PLAN	LED - 4000K	VAPOR TIGHT LED FIXTURE - ELEVATOR	LITHONIA	DMW2-L24-2000LM-PCL-WD-MVOLT-GZ10-40K80CRI
W4	277 V	19	WALL PER PLAN	LED - 4000K	WALL MOUNTED FLOOD LIGHT	LITHONIA	ESXF1-AL0-SWW2-KY-DDB-3000L
X1	277 V	2	WALL PER PLAN	LED-GREEN	WALL MOUNTED LED EXIT SIGN WITH INTEGRAL BATTERY BACK-UP	LITHONIA	LE-S-1-G-ELN-SD
X2	277 V	2	CEILING PER PLAN	LED-GREEN	CEILING MOUNTED LED EXIT SIGN WITH INTEGRAL BATTERY BACKUP	LITHONIA	LE-S-2-G-ELN-SD

LIGHTING FIXTURE SCHEDULE N.T.S. 14

ELECTRICAL SYMBOL LEGEND

DIMENSIONS INDICATED ARE MEASURED TO CENTERLINE OF ENCLOSURE, UNLESS OTHERWISE NOTED
NOTE: SOME SYMBOLS SHOWN MAY NOT APPLY TO THIS PROJECT

SYMBOL	DESCRIPTION
E.P.	DENOTES EXPLOSION PROOF CONSTRUCTION
D.T.	DENOTES DUST TIGHT CONSTRUCTION
O.C.	DENOTES SPACING DIMENSION ON CENTER LINE OF DEVICE
R.T.	DENOTES RAIN TIGHT CONSTRUCTION
U.G.	DENOTES UNDERGROUND INSTALLATION
V.P.	DENOTES VAPOR TIGHT CONSTRUCTION
W.P.	DENOTES WEATHERPROOF CONSTRUCTION
W.T.	DENOTES WATER TIGHT CONSTRUCTION
A.F.F.	DENOTES ABOVE FINISHED FLOOR
A.F.G.	DENOTES ABOVE FINISHED GRADE
F.B.O.	DENOTES FURNISHED BY OTHERS
U.O.N.	DENOTES UNLESS OTHERWISE NOTED
(E)	DENOTES EXISTING TO REMAIN, NO WORK U.O.N.
(N)	DENOTES NEW
(1)	ELECTRICAL KEYNOTES: DENOTES KEYNOTE #1 OF NOTES ON SAME SHEET
A-3	CIRCUIT HOME RUN: DENOTES PANEL A, CKT. #3, - 3/4"C. MINIMUM, U.O.N.
(1)	CIRCUIT FEEDER: DENOTES FEEDER '1' PER SYSTEM FEEDER SCHEDULE
	CONDUIT IN ATTIC/WALL: DENOTES 3/4"C-2#12 AWG CU THWN, 1#12 CU GND, U.O.N.
	CONDUIT IN FLOOR/U.G.: DENOTES 3/4"C-2#12 AWG CU THWN, 1#12 CU GND, U.O.N.
	DENOTES EXISTING CONDUIT RUN TO REMAIN
	CONDUIT RUN - STUBBED, CAPPED AND LABELED.
	CONDUIT RUN: DENOTES 3/4"C - 3 #12 AWG CU THWN + 1 #12 CU GND, U.O.N.
	CONDUIT RUN: DENOTES 3/4"C - 4 #12 AWG CU THWN + 1 #12 CU GND, U.O.N.
	CONDUIT RUN: DENOTES 3/4"C - 5 #12 AWG CU THWN + 1 #12 CU GND, U.O.N.
	CONDUIT RUN: DENOTES 1"C - 6 #12 AWG CU THWN + 1 #12 CU GND, U.O.N.
	SEPARATE POWER AND DATA FLOOR BOXES (2)
	FLUSH FLOOR BOX WITH DEVICE(S) INSTALLED PER PLANS, U.O.N. (2)
	TAMPER-RESISTANT SINGLE RECEPTACLE IN WALL @ +18", U.O.N.
	TAMPER-RESISTANT DUPLEX RECEPTACLE IN WALL @ +18", U.O.N.
	TAMPER-RESISTANT DUPLEX GFI RECEPTACLE. IN WALL @ 18", U.O.N.
	TAMPER-RESISTANT SWITCHED GFCI RECEPTACLE IN WALL @ +18" A.F.F. U.O.N. (OCC. SENSOR OR WALL SWITCH CONTROLLED)
WP	TAMPER-RESISTANT WEATHER RESISTANT (W/R) DUPLEX GFCI RECEPTACLE W/ W.P. COVER @+18", U.O.N.
	TAMPER-RESISTANT DUPLEX ISOLATED GROUND RECEPTACLE IN WALL @ +18", U.O.N. (7)
	TAMPER-RESISTANT QUADRUPLEX RECEPTACLE IN WALL @ +18", U.O.N.
	SPECIAL PURPOSE ELECTRICAL OUTLET PER PLAN IN WALL @ 18" U.O.N.
	DUPLEX RECEPTACLE FLUSH IN CEILING
	TAMPER-RESISTANT QUADRUPLEX RECEPTACLE IN WALL @ +18" A.F.F. U.O.N. ONE UNSWITCHED RECEPTACLE AND ONE SWITCHED (OCC. SENSOR CONTROLLED) RECEPTACLE
	JUNCTION BOX
	JUNCTION BOX WITH FLEXIBLE CONDUIT CONNECTION TO EQUIPMENT
	NON-FUSIBLE DISCONNECT SWITCH
	FUSIBLE DISCONNECT SWITCH
	FUSIBLE DISCONNECT SWITCH WITH INTEGRAL MAGNETIC STARTER
	ELECTRIC MOTOR
	EXHAUST FAN OR FRACTIONAL HORSEPOWER MOTOR
	SURFACE MOUNTED RACEWAY, MOUNT @ +18" A.F.F. U.O.N.
	RECESSED LED LIGHTING FIXTURE
	RECESSED LED LIGHTING FIXTURE WITH EMERGENCY BATTERY BACKUP
	SURFACE MOUNTED LED LIGHTING FIXTURE
	SURFACE MOUNTED LED LIGHTING FIXTURE WITH EMERGENCY BATTERY BACKUP
	SURFACE MOUNTED LED STRIP LIGHT
	SURFACE MOUNTED LED STRIP LIGHT WITH EMERGENCY BATTERY BACKUP
	POST TOP MOUNTED LIGHTING FIXTURE
	WALL MOUNTED LIGHTING FIXTURE
	WALL MOUNTED LIGHTING FIXTURE WITH EMERGENCY BATTERY BACKUP
	CEILING MOUNTED LIGHTING FIXTURE
	CEILING MOUNTED LIGHTING FIXTURE WITH EMERGENCY BATTERY BACKUP
	RECESSED LIGHTING FIXTURE
	RECESSED FIXTURE WITH EMERGENCY BATTERY BACKUP
	SURFACE MOUNTED ROUND LIGHTING FIXTURE
	SURFACE MOUNTED ROUND LIGHTING FIXTURE WITH EMERGENCY BATTERY BACKUP
	ILLUMINATED EXIT SIGN MOUNTED ON CEILING
	ILLUMINATED EXIT SIGN MOUNTED ON WALL
	LOW LEVEL PHOTOLUMINESCENT EXIT SIGN MOUNTED ON WALL
	POLE MOUNTED EXTERIOR LIGHTING FIXTURE
2/	COMBINATION VOICE AND DATA OUTLET IN WALL, WITH TWO 'D' CABLES TO IDF + TWO 'T' CABLES TO TELEPHONE BACKBOARD (1) (6)
X	DATA OUTLET IN WALL @ +18", U.O.N., WITH 'D' CABLES TO IDF OR MDF (SUBSCRIPT INDICATES QUANTITY OF CABLES AND STATION SIDE JACKS) (1) (6)
TV	TELEVISION OUTLET IN WALL @ +18", U.O.N. (1)
M	MICROPHONE OUTLET IN WALL @ +18", U.O.N. (1)
S	SPEAKER OUTLET IN WALL @ +18", U.O.N. (1)
IC	INTERCOMMUNICATIONS HANDSET ON WALL @ +48" TO TOP OF BOX U.O.N.
WAP	WIRELESS ACCESS POINT LOCATION, PROVIDE TWO TYPE 'D10' CABLES TO IDF

SYMBOL	DESCRIPTION
$ a	SINGLE POLE AC SNAP SWITCH @ +48" TO TOP OF BOX, U.O.N. — LOWER CASE SUBSCRIPT INDICATES CONTROLLED SWITCHLEG OF CIRCUIT
$ 2	TWO POLE AC SNAP SWITCH @ +48" TO TOP OF BOX, U.O.N.
$ 3	THREE WAY AC SNAP SWITCH @ +48" TO TOP OF BOX, U.O.N.
$ 4	FOUR WAY AC SNAP SWITCH @ +48" TO TOP OF BOX, U.O.N.
$ M	HORSEPOWER RATED AC SNAP SWITCH @ +48" TO TOP OF BOX U.O.N.
$ P	SINGLE POLE AC SNAP SWITCH WITH PILOT LAMP @ +48" TO TOP OF BOX U.O.N.
$ T	DIGITAL TIMER SWITCH, FLUSH MOUNTED @ +48" TO TOP OF BOX U.O.N.
$ A	SINGLE POLE AC SNAP SWITCH @ +48" TO TOP OF BOX, U.O.N.
$ K	KEY OPERATED AC SNAP SWITCH @ +48" TO TOP OF BOX U.O.N.
$ CS	SYSTEM CONTROL SWITCH PER PLANS, @ 48" TO TOP OF BOX U.O.N.
$	WALL SWITCH WITH INTEGRAL OCCUPANCY SENSOR @ +48" TO TOP OF BOX, U.O.N.
M	OCCUPANCY SENSOR - CEILING MOUNTED
M W	OCCUPANCY SENSOR - WALL MOUNTED @ +90" TO TOP OF BOX, U.O.N.
P	LIGHTING CONTROL SYSTEM DIMMING/POWER PACK MOUNTED IN ATTIC
RP	LIGHTING CONTROL SYSTEM PLUG LOAD RELAY PACK MOUNTED IN ATTIC
C1	LIGHTING CONTROL SYSTEM 3-BUTTON DIMMING WALL SWITCH @ +48" TO TOP OF BOX, U.O.N.
C4	LIGHTING CONTROL SYSTEM 4-BUTTON DIMMING WALL SWITCH @ +48" TO TOP OF BOX, U.O.N.
C1L	LIGHTING CONTROL SYSTEM DIMMING WALL SWITCH WITH LOCKING COVER @ +48" TO TOP OF BOX, U.O.N.
DS	LIGHTING CONTROL SYSTEM DAYLIGHT SENSOR - CEILING MOUNTED
NB	LIGHTING CONTROL SYSTEM NETWORK BRIDGE
NG	LIGHTING CONTROL SYSTEM NETWORK GATEWAY
AD	LIGHTING CONTROL SYSTEM AUTOMATED DEMAND RESPONSE MODULE
TC	LIGHTING CONTROL SYSTEM TIME CLOCK
PC	PHOTOCELL CONTROL MOUNTED ON ROOF
T	LOW VOLTAGE CONTROL TRANSFORMER
	ELECTRICAL PANELBOARD PER PLANS, FLUSH MOUNTED IN WALL (4)
	ELECTRICAL PANELBOARD PER PLANS, SURFACE MOUNTED ON WALL
	TERMINAL CABINET PER PLANS, FLUSH MOUNTED IN WALL (5)
	TERMINAL CABINET PER PLANS, SURFACE MOUNTED ON WALL
	CONTROL PANEL PER PLANS, FLUSH MOUNTED IN WALL (5)
	CONTROL PANEL PER PLANS, SURFACE MOUNTED ON WALL
	LIGHTING CONTROL PANEL PER PLANS, FLUSH MOUNTED IN WALL (5)
	LIGHTING CONTROL PANEL PER PLANS, SURFACE MOUNTED ON WALL
	FIRE ALARM PANEL PER PLANS, FLUSH MOUNTED IN WALL (5)
	FIRE ALARM PANEL PER PLANS, SURFACE MOUNTED ON WALL
S	EXTERIOR SPEAKER, ELEVATION AS NOTED
S	SPEAKER IN CEILING, U.O.N.
S CR	SPEAKER/CLOCK IN COMMON BACKBOX PER PLAN @ 12" BELOW CEILING, U.O.N.
	WALL CLOCK PER PLAN @ 12" BELOW CEILING, U.O.N.
S	SPEAKER ON WALL @ 12" BELOW CEILING, U.O.N.
AC	ACCESS CONTROL SYSTEM MAGNETIC DOOR CONTACT
ES	ACCESS CONTROL SYSTEM ELECTRIC DOOR STRIKE
EH	ACCESS CONTROL SYSTEM ELECTRIC DOOR HINGE
CR	ACCESS CONTROL SYSTEM CARD READER WALL MOUNTED @ +46" TO TOP OF BOX
mm CR	ACCESS CONTROL SYSTEM CARD READER MULLION MOUNTED @ +46" TO TOP OF DEVICE
C	SECURITY CAMERA ROUGH-IN LOCATION PER PLAN (3)
B	FIRE SPRINKLER BELL PER FIRE PROTECTION PLANS
SD	FIRE ALARM SMOKE DETECTOR ON CEILING, U.O.N.
SM	FIRE ALARM SYNC MODULE
HD	FIRE ALARM HEAT DETECTOR ON CEILING, U.O.N.
DD	FIRE ALARM DUCT DETECTOR IN HVAC DUCT
WF	FIRE ALARM WATERFLOW DETECTION SWITCH
TS	FIRE ALARM TAMPER SWITCH
CC	FIRE ALARM ADDRESSABLE INPUT/OUTPUT MODULE
CR	FIRE ALARM ADDRESSABLE CONTROL RELAY MODULE
DR	FIRE ALARM DOOR RELEASE
AM	FIRE ALARM INDIVIDUAL ADDRESSABLE MODULE
F	FIRE ALARM MANUAL PULL STATION @ +46" TO TOP OF BOX, U.O.N.
V	FIRE ALARM VISUAL ALARM UNIT @ +80" MINIMUM, U.O.N.
H	INTERIOR FIRE ALARM HORN @ +10'-0", U.O.N.
H	EXTERIOR FIRE ALARM HORN
AV	FIRE ALARM HORN/STROBE ALARM UNIT @ +80" MINIMUM, U.O.N.
SV	VOICE EVACUATION SPEAKER/STROBE ALARM UNIT @ +80" MINIMUM, U.O.N.
S	EXTERIOR VOICE EVACUATION SPEAKER
	FIRE ALARM CIRCUIT END OF LINE RESISTOR

ELECTRICAL SYMBOLS NOTES:

(1) RUN 1"C CONCEALED IN WALL AND STUB INTO ACCESSIBLE ATTIC SPACE ABOVE NEAREST T-BAR CEILING, U.O.N.

(2) RUN 1"C TO NEAREST WALL, THEN RISE CONCEALED IN WALL AND STUB INTO ACCESSIBLE ATTIC SPACE ABOVE NEAREST T-BAR CEILING, U.O.N. FOR SINGLE SYSTEMS INDIVIDUAL FLOORBOXES. WHERE MULTIPLE SYSTEMS OCCUR WITHIN A

\\tet-file1\Users\gene.vea_TETR\Documents\12498-E-UC_gene.vea.rvt

PANEL: L1

100 AMP BUS
NEW LIGHTING 277/480V, 3 PH, 4 W
PANELBOARD 100% RATED NEUTRAL

MAIN: 100A CB
TRIP: THERMAL-MAGNETIC
A.I.C.: 22000 A

LOCATION: ELECTRICAL ROOM 127
MOUNTING: SURFACE PER DETAIL 12/E602.2
ENCLOSURE: NEMA 1

CIRCUIT CKT NO.	CIRCUIT PNL SPACE	BREAKER AMP	BREAKER POLE	SERVES	VOLT-AMPERES LOAD	A	B	C	LOAD	SERVES	BREAKER AMP	BREAKER POLE	CIRCUIT PNL SPACE	CIRCUIT CKT NO.
1	1	20	1	LTG-RM111A-E (PROG. OFFICE1)	390	1226			836	LIGHTING - RM114 & RM 116	20	1	2	2
3	3	20	1	LIGHTING - E.M.R. 108	27		468		441	LIGHTING - RM122-125	20	1	4	4
5	5	20	1	LIGHTING - ELEVATOR PIT E1	18			45	27	LIGHTING - E.M.R. 121	20	1	6	6
7	7	20	1	LIGHTING - RM, 113,115,117	1402	1420			18	LIGHTING - ELEVATOR PIT E2	20	1	8	8
9	9	20	1	LIGHTING - RM118&119	104		458		354	LIGHTING - CORR. FIXT. 'C3'	20	1	10	10
11	11	20	1	LIGHTING - LECTURE 101	1529			3001	1472	LIGHTING - CORR. FIXT. 'C6'	20	1	12	12
13	13	20	1	LTG - ENTRY 100 INGRADE	138	1126			988	LIGHTING - CORR. FIXT. 'C5'	20	1	14	14
15	15	20	1	SPARE	0		368		368	LIGHTING - CORR. 'C1 & 'C2'	20	1	16	16
17	17	20	1	LIGHTING - RM 101A	303			505	202	LIGHTING - BLD EXTERIOR	20	1	18	18
19	19	20	1	LT-104-107,109,127-129,101C/D	1200	1245			45	LIGHTING - CORR. 'R11' &'R6'	20	1	20	20
21	21	20	1	LTG-RM110A-E (PROG. OFFICE2)	390		780		390	LTG-RM112A-E (PROG....	20	1	22	22
23	23	20	1	SPARE	0			0	0	SPARE	20	1	24	24
25	25	20	1	SPARE	0	0			0	SPARE	20	1	26	26
27	27	20	1	SPARE	0		0		0	SPARE	20	1	28	28
29	29	20	1	SPARE	0			0	0	SPARE	20	1	30	30
31	31	20	1	SPARE	0	0			0	SPARE	20	1	32	32
33	33	20	1	SPARE	0		0		0	SPARE	20	1	34	34
35	35	20	1	LTG-EXT BOLLARD,INGRD,&STEP	666			1665	999	LTG-EXT S INGRADE & PLNTR	20	1	36	36
37	37	20	1	LTG - EXTERIOR CANOPY	569	713			144	LTG-EXT CARPORT	20	1	38	38
39	39	20	1	LTG-SITE POLE LTGS (NORTH)	340		960		620	LTG-SITE POLE LTGS (SOUTH)	20	1	40	40
41	41	20	1	SPARE	0			63	63	SIGNAGE LIGHT (SOUTH)	20	1	42	42
				TOTAL CONNECTED LOAD (VA) :		5730	3034	5279						
				25% LCL/LML (VA) :		1433	759	1320						
				TOTAL CALCULATED LOAD (VA) :		7163	3793	6599	TOTAL CALCULATED LOAD FOR PANEL:					
				TOTAL CALCULATED LOAD (AMPS) :		25.9	13.7	23.8	17554 VA					

PANEL: L2

100 AMP BUS
NEW LIGHTING 277/480V, 3 PH, 4 W
PANELBOARD 100% RATED NEUTRAL

MAIN: 100A CB
TRIP: THERMAL-MAGNETIC
A.I.C.: 22000 A

LOCATION: ELECTRICAL ROOM 232
MOUNTING: SURFACE PER DETAIL 12/E602.2
ENCLOSURE: NEMA 1

CIRCUIT CKT NO.	CIRCUIT PNL SPACE	BREAKER AMP	BREAKER POLE	SERVES	VOLT-AMPERES LOAD	A	B	C	LOAD	SERVES	BREAKER AMP	BREAKER POLE	CIRCUIT PNL SPACE	CIRCUIT CKT NO.
1	1	20	1	LIGHTING-RM211,213, 215,217	1672	3030			1358	LIGHTING - RM 212,214,216	20	1	2	2
3	3	20	1	LTG-RM207-209,225-232,COR224	753		1187		434	LIGHTING - RM 219 - 223	20	1	4	4
5	5	20	1	SPARE	0			460	460	LTG - RM 210A-C (FACULTY)	20	1	6	6
7	7	20	1	SPARE	0	824			824	LIGHTING - LOBBY TRACK LTS	20	1	8	8
9	9	20	1	LIGHTING - RM 202-205	1560		1638		78	LIGHTING - COR WHT BOARDS	20	1	10	10
11	11	20	1	LIGHTING - LOBBY	972			1956	984	LIGHTING - CORR. FIXT. 'C5'	20	1	12	12
13	13	20	1	LIGHTING - LOBBY INV1	573	1541			968	LIGHTING - CORR. FIXT. 'C4'	20	1	14	14
15	15	20	1	LIGHTING - EXT ENTRY INV2	125		1223		1098	LIGHTING - CORRIDOR	20	1	16	16
17	17	20	1	SPARE	0			0	0	SPARE	20	1	18	18
19	19	20	1	SPARE	0	0			0	SPARE	20	1	20	20
21	21	20	1	SPARE	0		0		0	SPARE	20	1	22	22
23	23	20	1	SPARE	0			0	0	SPARE	20	1	24	24
25	25	20	1	SPARE	0	0			0	SPARE	20	1	26	26
27	27	20	1	SPARE	0		0		0	SPARE	20	1	28	28
29	29	20	1	SPARE	0			0	0	SPARE	20	1	30	30
31	31	20	1	SPARE	0	0			0	SPARE	20	1	32	32
33	33	20	1	SPARE	0		0		0	SPARE	20	1	34	34
35	35	20	1	SPARE	0			0	0	SPARE	20	1	36	36
37	37	20	1	SPARE	0	0			0	SPARE	20	1	38	38
39	39	20	1	SPARE	0		0		0	SPARE	20	1	40	40
41	41	20	1	SPARE	0			0	0	SPARE	20	1	42	42
				TOTAL CONNECTED LOAD (VA) :		5395	4048	2416						
				25% LCL/LML (VA) :		1349	1012	604						
				TOTAL CALCULATED LOAD (VA) :		6744	5060	3020	TOTAL CALCULATED LOAD FOR PANEL:					
				TOTAL CALCULATED LOAD (AMPS) :		24.3	18.3	10.9	14824 VA					

PANEL: DPH

NEW DISTRIBUTION SWITCHBOARD

BUS: 1600 AMP BUS
VOLTAGE: 277/480V, 3 PH, 4 W
NEUTRAL: 100% RATED NEUTRAL

MAIN: 1600A CB GFP
TRIP: ELECTRONIC LSIG
A.I.C.: 35 kAIC

LOCATION: ELECTRICAL ROOM 127
MOUNTING: FLOOR PER DETAIL 1/E602.2
ENCLOSURE: NEMA 1

CIRCUIT CKT NO.	CIRCUIT PNL SPACE	BREAKER AMP	BREAKER POLE	SERVES	VOLT-AMPERES LOAD	A	B	C
		30	3	SURGE PROTECTIVE DEVICE (SPD) 120kA	0	0		
					0		0	
					0			0
1	1	150	3	PANEL 'L1'	7163	7163		
					3793		3793	
					6599			6599
2	2	150	3	PANEL 'L2'	6744	6744		
					5060		5060	
					3020			3020
3	3	600	3	PANEL 'ACH1'	98023	98023		
					98023		98023	
					98023			98023
4	4	450	3	CHILLER 'CH-1'	114927	114927		
					114927		114927	
					114927			114927
5	5	225	3	PANEL 'EQH1'	8005	8005		
					8006		8006	
					8006			8006
6	6	225	3	SPARE	0	0		
					0		0	
					0			0
7	7	350	3	TRANSFORMER TDPL	60071	60071		
					68297		68297	
					61119			61119
8	8	90	3	ELEVATOR (SHUNT-TRIP CIRCUIT BREAKER)	14404	14404		
					14404		14404	
					14404			14404
9	9	90	3	ELEVATOR (SHUNT-TRIP CIRCUIT BREAKER)	14404	14404		
					14404		14404	
					14404			14404
10	10	125	3	TRANSFORMER TR3	20356	20356		
					20632		20632	
					22854			22854
11	11	70	3	SPARE	0	0		
					0		0	
					0			0
12	12		3	SPACE	0	0		
					0		0	
					0			0
13	13		3	SPACE	0	0		
					0		0	
					0			0
				TOTAL CONNECTED LOAD (VA) :	344097	347546	343356	
				25% LCL/LML (VA) :	0	0	0	
				TOTAL CALCULATED LOAD (VA) :	344097	347546	343356	
				TOTAL CALCULATED LOAD (AMPS) :	1242.2	1254.7	1239.6	

PANEL: MSB

NEW MAIN SWITCHBOARD (PROVIDED IN INCREMENT 1)

BUS: 2000 AMP BUS
VOLTAGE: 277/480V, 3 PH, 4 W
NEUTRAL: 100% RATED NEUTRAL

MAIN: 2000A CB GFP
TRIP: ELECTRONIC LSIG
A.I.C.: 65 kAIC

LOCATION: ELECTRICALYARD
MOUNTING: PAD PER DETAIL 1/E600.1
ENCLOSURE: NEMA 3R

CIRCUIT CKT NO.	CIRCUIT PNL SPACE	BREAKER AMP	BREAKER POLE	SERVES	VOLT-AMPERES LOAD	A	B	C
					0	0		
1	1	60	3	SURGE PROTECTIVE DEVICE (240kA)	0		0	
					0			0
					6300	6300		
2	2	45	3	TRANSFORMER 'TY'	5060		5060	
					6300			6300
					6094	6094		
3	3	40	3	IRRIGATION BOOSTER PUMP	6094		6094	
					6094			6094
					28494	28494		
4	4	150	3	AUTOMATIC TRANSFER SWITCH 'ATS'	28344		28344	
					27590			27590
					24960	24960		
5	5	175	3	TRANSFORMER 'TEV'	24960		24960	
					16640			16640
					0	0		
6	6			PREPARED SPACE	0		0	
					0			0
					344097	344097		
7	7	1600	3	DISTRIBUTION SWITCHBOARD 'DPH'	347546		347546	
					343356			343356
					16627	16627		
8	8	400	3	SOLAR BESS COLLECTOR PANEL	16627		16627	
					16627			16627
				TOTAL CONNECTED LOAD (VA) :	426572	428631	416607	
				25% LCL/LML (VA) :	0	0	0	
				TOTAL CALCULATED LOAD (VA) :	426572	428631	416607	
				TOTAL CALCULATED LOAD (AMPS) :	1540.0	1547.4	1504.0	

PANEL: DPL

NEW DISTRIBUTION SWITCHBOARD

BUS: 800 AMP BUS
VOLTAGE: 120/208V, 3 PH, 4 W
NEUTRAL: 100% RATED NEUTRAL

MAIN: 800A CB
TRIP: ELECTRONIC LSIG
A.I.C.: 35 kAIC

LOCATION: ELECTRICAL ROOM 127
MOUNTING: SURFACE PER DETAIL 12/E602.2
ENCLOSURE: NEMA 1

CIRCUIT CKT NO.	CIRCUIT PNL SPACE	BREAKER AMP	BREAKER POLE	SERVES	VOLT-AMPERES LOAD	A	B	C
					13290	13290		
1	1	200	3	PANEL 'R1'	10966		10966	
					9600			9600
					10810	10810		
2	2	200	3	PANEL 'R2'	14040		14040	
					13500			13500
					1080	1080		
3	3	100	3	PANEL 'R6'	1918		1918	
					1176			1176
					11238	11238		
4	4	150	3	PANEL 'ACL2'	11238		11238	
					11300			11300
					8263	8263		
5	5	150	3	PANEL 'EQL1'	5535		5535	
					6933			6933
					0	0		
6	6	100	3	SPARE	0		0	
					0			0
					15390	15390		
7	7	225	3	PANEL 'EQS1'	24600		24600	
					18610			18610
					0	0		
8	8		3	SPACE	0		0	
					0			0
					0	0		
9	9		3	SPARE	0		0	
					0			0
					0	0		
10	10		3	SPACE	0		0	
					0			0
				TOTAL CONNECTED LOAD (VA) :	60071	68297	61119	
				25% LCL/LML (VA) :	0	0	0	
				TOTAL CALCULATED LOAD (VA) :	60071	68297	61119	
				TOTAL CALCULATED LOAD (AMPS) :	500.6	569.1	509.3	

IDENTIFICATION STAMP
DIV. OF THE STATE ARCHITECT
APP: 02-122821 INC: 2
REVIEWED FOR
SS ☑ FLS ☑ ACS ☑
DATE: 11/20/2025

Teter, Inc. expressly reserves its common law copyright and other property rights in these plans. This document, the ideas and designs incorporated herein, as an instrument of professional service, is not to be used in whole or part, for any other project without prior written authorization.

MARK	DATE	DESCRIPTION
A	11/13/2025	DSA BACKCHECK



08/21/2025

TETER, INC.
FRESNO HEADQUARTERS
VISALIA | BAKERSFIELD | MODESTO | SAN LUIS OBISPO
ARCHITECTS ENGINEERS CONNECTED

VISALIA CAMPUS UNIVERSITY CENTER
COLLEGE OF THE SEQUOIAS
915 S. MOONEY BLVD
VISALIA, CA

DRAWING TITLE
PANEL SCHEDULES

PROJECT NO.
22-12498

DRAWING
E801.2

\\tet-file1\Users\gene.vea_TET\Documents\12498-E-UC_gene.vea.rvt

PANEL: ACL2

150 AMP BUS | MAIN: 150A CB | LOCATION: ELECTRICAL ROOM 232
NEW HVAC | 120/208V, 3 PH, 4 W | TRIP: THERMAL-MAGNETIC | MOUNTING: SURFACE PER DETAIL 12/E602.2
PANELBOARD | 100% RATED NEUTRAL | A.I.C.: 10000 A | ENCLOSURE: NEMA 1

CIRCUIT CKT NO.	CIRCUIT PNL SPACE	BREAKER AMP	BREAKER POLE	SERVES	VOLT-AMPERES LOAD	A	B	C	LOAD	SERVES	BREAKER AMP	BREAKER POLE	CIRCUIT PNL SPACE	CIRCUIT CKT NO.
1	1	30	2	OUTDOOR UNIT 'ODU-1'	2600	3744			1144	OUTDOOR UNIT 'ODU-3'	30	2	2	2
3	3				2600		3744		1144				4	4
5	5	30	2	OUTDOOR UNIT 'ODU-2A'	2600			5200	2600	OUTDOOR UNIT 'ODU-4'	30	2	6	6
7	7				2600	5200			2600				8	8
9	9	30	2	OUTDOOR UNIT 'ODU-2B'	2600		5200		2600	OUTDOOR UNIT 'ODU-5'	30	2	10	10
11	11				2600			5200	2600				12	12
13	13	20	1	FIRE SMOKE DAMPERS	500	1644			1144	OUTDOOR UNIT 'ODU-6'	30	2	14	14
15	15	20	1	DCT SMK DETECT-2ND WEST	500		1644		1144				16	16
17	17	20	1	DCT SMK DETECT-2ND EAST	250			250	0	SPARE	15	1	18	18
19	19	20	1	SPARE	0	0			0	SPARE	20	1	20	20
21	21	20	1	SPARE	0		0		0	SPARE	20	1	22	22
23	23	20	1	SPARE	0			0	0	SPARE	20	1	24	24
25	25	20	1	SPARE	0	0			0	SPARE	35	2	26	26
27	27	20	1	SPARE	0		0		0	SPARE			28	28
29	29	20	1	SPARE	0			0	0	SPARE	35	2	30	30
31	31	20	1	SPARE	0	0			0	SPARE			32	32
33	33	20	1	SPARE	0		0		0	SPARE	25	2	34	34
35	35	20	1	SPARE	0			0	0	SPARE			36	36
37	37	20	1	SPARE	0	0			0	SPARE	25	2	38	38
39	39	20	1	SPARE	0		0		0	SPARE			40	40
41	41	20	1	SPARE	0			0	0	SPARE	20	1	42	42
				TOTAL CONNECTED LOAD (VA) :	10588	10588	10650							
				25% LCL/LML (VA) :	650	650	650							
				TOTAL CALCULATED LOAD (VA) :	11238	11238	11300	TOTAL CALCULATED LOAD FOR PANEL:						
				TOTAL CALCULATED LOAD (AMPS) :	93.7	93.7	94.2	33776 VA						

PANEL: ACH4

100 AMP BUS | MAIN: 100A CB | LOCATION: ELECTRICAL ROOM 232
NEW HVAC | 277/480V, 3 PH, 4 W | TRIP: THERMAL-MAGNETIC | MOUNTING: SURFACE PER DETAIL 12/E602.2
PANELBOARD | 100% RATED NEUTRAL | A.I.C.: 22000 A | ENCLOSURE: NEMA 1

CIRCUIT CKT NO.	CIRCUIT PNL SPACE	BREAKER AMP	BREAKER POLE	SERVES	VOLT-AMPERES LOAD	A	B	C	LOAD	SERVES	BREAKER AMP	BREAKER POLE	CIRCUIT PNL SPACE	CIRCUIT CKT NO.
1	1				1906	3812			1906				2	2
3	3	15	3	FAN COIL 'FC 2-1'	1906		3812		1906	FAN COIL 'FC 2-7'	15	3	4	4
5	5				1906			3812	1906				6	6
7	7				1906	3050			1144				8	8
9	9	15	3	FAN COIL 'FC 2-2'	1906		3050		1144	FAN COIL 'FC 2-8'	15	3	10	10
11	11				1906			3050	1144				12	12
13	13				1906	3812			1906				14	14
15	15	15	3	FAN COIL 'FC 2-3'	1906		3812		1906	FAN COIL 'FC 2-9'	15	3	16	16
17	17				1906			3812	1906				18	18
19	19				452	2358			1906				20	20
21	21	15	3	FAN COIL 'FC 2-4'	452		2358		1906	FAN COIL 'FC 2-10'	15	3	22	22
23	23				452			2358	1906				24	24
25	25				867	2773			1906				26	26
27	27	15	3	FAN COIL 'FC 2-5'	867		2773		1906	FAN COIL 'FC 2-11'	15	3	28	28
29	29				867			2773	1906				30	30
31	31				1906	3050			1144				32	32
33	33	15	3	FAN COIL 'FC 2-6'	1906		3050		1144	FAN COIL 'FC 2-12'	15	3	34	34
35	35				1906			3050	1144				36	36
37	37	20	1	SPARE	0	0			0	SPARE	20	1	38	38
39	39	20	1	SPARE	0		0		0	SPARE	20	1	40	40
41	41	20	1	SPARE	0			0	0	SPARE	20	1	42	42
				TOTAL CONNECTED LOAD (VA) :	18855	18855	18855							
				25% LCL/LML (VA) :	477	477	477							
				TOTAL CALCULATED LOAD (VA) :	19332	19332	19332	TOTAL CALCULATED LOAD FOR PANEL:						
				TOTAL CALCULATED LOAD (AMPS) :	69.8	69.8	69.8	57995 VA						

PANEL: ACH1

600 AMP BUS | MAIN: 600A CB | LOCATION: ELECTRICAL ROOM 232
NEW HVAC | 277/480V, 3 PH, 4 W | TRIP: THERMAL-MAGNETIC | MOUNTING: SURFACE PER DETAIL 12/E602.2
PANELBOARD | 100% RATED NEUTRAL | A.I.C.: 35000 A | ENCLOSURE: NEMA 1

CIRCUIT CKT NO.	CIRCUIT PNL SPACE	BREAKER AMP	BREAKER POLE	SERVES	VOLT-AMPERES LOAD	A	B	C	LOAD	SERVES	BREAKER AMP	BREAKER POLE	CIRCUIT PNL SPACE	CIRCUIT CKT NO.
1	1				0	0			0				2	2
3	3	15	3	SPARE	0		0		0	SPARE	20	3	4	4
5	5				0			0	0				6	6
7	7				22606	22606			0				8	8
9	9	150	3	PANEL 'ACH5'	22606		22606		0	SPARE	20	3	10	10
11	11				22606			22606	0				12	12
13	13				0	0			0				14	14
15	15	30	3	SPARE	0		0		0	SPARE	20	3	16	16
17	17				0			0	0				18	18
19	19				0	0			0				20	20
21	21	30	3	SPARE	0		0		0	SPARE	20	3	22	22
23	23				0			0	0				24	24
25	25				0	19332			19332				26	26
27	27	30	3	SPARE	0		19332		19332	PANEL 'ACH4'	100	3	28	28
29	29				0			19332	19332				30	30
31	31				0	50434			50434				32	32
33	33	30	3	SPARE	0		50434		50434	PANEL 'ACH2'	250	3	34	34
35	35				0			50434	50434				36	36
37	37				0	0			0				38	38
39	39	30	3	SPARE	0		0		0	SPARE	225	3	40	40
41	41				0			0	0				42	42
				TOTAL CONNECTED LOAD (VA) :	92371	92371	92371							
				25% LCL/LML (VA) :	5652	5652	5652							
				TOTAL CALCULATED LOAD (VA) :	98023	98023	98023	TOTAL CALCULATED LOAD FOR PANEL:						
				TOTAL CALCULATED LOAD (AMPS) :	353.9	353.9	353.9	294068 VA						

PANEL: ACH5

225 AMP BUS | MAIN: 150A CB | LOCATION: ELECTRICAL ROOM 127
NEW HVAC | 277/480V, 3 PH, 4 W | TRIP: THERMAL-MAGNETIC | MOUNTING: SURFACE PER DETAIL 12/E602.2
PANELBOARD | 100% RATED NEUTRAL | A.I.C.: 22000 A | ENCLOSURE: NEMA 1

CIRCUIT CKT NO.	CIRCUIT PNL SPACE	BREAKER AMP	BREAKER POLE	SERVES	VOLT-AMPERES LOAD	A	B	C	LOAD	SERVES	BREAKER AMP	BREAKER POLE	CIRCUIT PNL SPACE	CIRCUIT CKT NO.
1	1				867	2773			1906				2	2
3	3	15	3	FAN COIL 'FC 1-1'	867		2773		1906	FAN COIL 'FC 1-9'	15	3	4	4
5	5				867			2773	1906				6	6
7	7				2011	3745			1734				8	8
9	9	15	3	FAN COIL 'FC 1-2' AND FAN COIL 'FC 1-3'	2011		3745		1734	FAN COIL 'FC 1-10' AND FAN COIL 'FC 1-11'	15	3	10	10
11	11				2011			3745	1734				12	12
13	13				1319	3225			1906				14	14
15	15	15	3	FAN COIL 'FC 1-4' AND FAN COIL 'FC 1-5'	1319		3225		1906	FAN COIL 'FC 1-12'	15	3	16	16
17	17				1319			3225	1906				18	18
19	19				1734	4022			2288				20	20
21	21	15	3	FAN COIL 'FC 1-6' AND FAN COIL 'FC 1-7'	1734		4022		2288	FAN COIL 'FC 1-13' AND FAN COIL 'FC 1-14'	15	3	22	22
23	23				1734			4022	2288				24	24
25	25				1144	3050			1906				26	26
27	27	15	3	FAN COIL 'FC 1-8'	1144		3050		1906	FAN COIL 'FC 1-15'	15	3	28	28
29	29				1144			3050	1906				30	30
31	31				3108	5014			1906				32	32
33	33	20	3	AIR HANDLER 'AH-1'	3108		5014		1906	FAN COIL 'FC 1-16'	15	3	34	34
35	35				3108			5014	1906				36	36
37	37	20	1	SPARE	0	0			0	SPARE	20	1	38	38
39	39	20	1	SPARE	0		0		0	SPARE	20	1	40	40
41	41	20	1	SPARE	0			0	0	SPARE	20	1	42	42
				TOTAL CONNECTED LOAD (VA) :	21829	21829	21829							
				25% LCL/LML (VA) :	777	777	777							
				TOTAL CALCULATED LOAD (VA) :	22606	22606	22606	TOTAL CALCULATED LOAD FOR PANEL:						
				TOTAL CALCULATED LOAD (AMPS) :	81.6	81.6	81.6	67818 VA						

PANEL: ACH2

250 AMP BUS | MAIN: 250A | LOCATION: ELECTRICAL ROOM 232
NEW HVAC | 277/480V, 3 PH, 4 W | TRIP: THERMAL-MAGNETIC | MOUNTING: SURFACE PER DETAIL 12/E602.2
PANELBOARD | 100% RATED NEUTRAL | A.I.C.: 22000 A | ENCLOSURE: NEMA 1

CIRCUIT CKT NO.	CIRCUIT PNL SPACE	BREAKER AMP	BREAKER POLE	SERVES	VOLT-AMPERES LOAD	A	B	C	LOAD	SERVES	BREAKER AMP	BREAKER POLE	CIRCUIT PNL SPACE	CIRCUIT CKT NO.
1	1				3047	7535			4488				2	2
3	3	20	3	CHILLER PUMP 'P-1A'	3047		7535		4488	DOAS-1	25	3	4	4
5	5				3047			7535	4488				6	6
7	7				3047	7535			4488				8	8
9	9	20	3	CHILLER PUMP 'P-1B'	3047		7535		4488	DOAS-2	25	3	10	10
11	11				3047			7535	4488				12	12
13	13				2105	5152			3047				14	14
15	15	15	3	CHILLER PUMP 'P-2A'	2105		5152		3047	DOAS-3	20	3	16	16
17	17				2105			5152	3047				18	18
19	19				2105	2105			0				20	20
21	21	15	3	CHILLER PUMP 'P-2B'	2105		2105		0	SPARE	15	3	22	22
23	23				2105			2105	0				24	24
25	25				5955	5955			0				26	26
27	27	30	3	HEAT RECOVERY UNIT 'ERV-1'	5955		5955		0	SPARE	30	3	28	28
29	29				5955			5955	0				30	30
31	31				5955	11910			5955				32	32
33	33	30	3	HEAT RECOVERY UNIT 'ERV-2'	5955		11910		5955	HEAT RECOVERY UNIT 'ERV-4'	30	3	34	34
35	35				5955			11910	5955				36	36
37	37				3767	8753			4986				38	38
39	39	15	3	HEAT RECOVERY UNIT 'ERV-3'	3767		8753		4986	HEAT RECOVERY UNIT 'ERV-5'	25	3	40	40
41	41				3767			8753	4986				42	42
				TOTAL CONNECTED LOAD (VA) :	48945	48945	48945							
				25% LCL/LML (VA) :	1489	1489	1489							
				TOTAL CALCULATED LOAD (VA) :	50434	50434	50434	TOTAL CALCULATED LOAD FOR PANEL:						
				TOTAL CALCULATED LOAD (AMPS) :	182.1	182.1	182.1	151301 VA						

IDENTIFICATION STAMP
DIV. OF THE STATE ARCHITECT
APP: 02-122821 INC: 2
REVIEWED FOR
SS ☑ FLS ☑ ACS ☑
DATE: 11/20/2025

Teter, Inc. expressly reserves its common law copyright and other property rights in these plans. This document, the ideas and designs incorporated herein, as an instrument of professional service, is not to be used in whole or in part, for any other project without prior written authorization.

MARK	DATE	DESCRIPTION
A	11/13/2025	DSA BACKCHECK

08/21/2025

TETER, INC.
FRESNO HEADQUARTERS
VISALIA | BAKERSFIELD | MODESTO | SAN LUIS OBISPO
ARCHITECTS ENGINEERS CONNECTED

VISALIA CAMPUS UNIVERSITY CENTER
COLLEGE OF THE SEQUOIAS
915 S. MOONEY BLVD
VISALIA, CA

DRAWING TITLE
PANEL SCHEDULES

PROJECT NO.
22-12498

DRAWING
E802.2

\\tet-file1\Users\gene.vea_TETER\Documents\12498-E-UC_gene.vea.rvt

PANEL: EQS1

225 AMP BUS | MAIN: 225A | LOCATION: ROOM 204 CORRIDOR
NEW EQUIPMENT | 120/208V, 3 PH, 4 W | TRIP: THERMAL-MAGNETIC | MOUNTING: RECESSED PER DETAIL 26/E603.2
PANELBOARD | 100% RATED NEUTRAL | A.I.C.: 22000 A | ENCLOSURE: NEMA 1

CIRCUIT CKT NO.	CIRCUIT PNL SPACE	BREAKER AMP	BREAKER POLE	SERVES	VOLT-AMPERES LOAD	A	B	C	LOAD	SERVES	BREAKER AMP	BREAKER POLE	CIRCUIT PNL SPACE	CIRCUIT CKT NO.
1	1	20	2	OVEN	1680	3030			1350	AUTOCLAVE	15	2	2	2
3	3				1680		3030		1350				4	4
5	5	20	1	RECEPTACLES - COMPUTERS	720			1020	300	FTIR SPECTROMETER - RM 204	20	1	6	6
7	7	20	1	RECEPTACLES - COMPUTERS	1080	1260			180	RECEPTACLE - PC	20	1	8	8
9	9	20	2	ICP-OES MASS SPECTROMETER	1450		2550		1100	GAS CHROMATOGRAPHY	20	1	10	10
11	11				1450			3370	1920	DISHWASHER - ROOM 204	20	1	12	12
13	13	20	1	CAPILLARY ELECTOPHORESIS	300	300			0	SPARE	20	1	14	14
15	15	20	2	ICP-MS MASS SPECTROMETER	1500		1500		0	SPARE	20	1	16	16
17	17				1500			1500	0	SPARE	20	1	18	18
19	19	15	2	AA ATOMIC ABSORPTION	500	500			0	SPARE	20	1	20	20
21	21				500		3000		2500	ZETIUM XRF SPECTROMETER ROOM 204	45	2	22	22
23	23	20	1	RAMAN SPECTROMETER	80			2580	2500				24	24
25	25	15	2	ACCURATE MASS TOF	1100	1280			180	RECEPT - ULTRASONIC BATH	20	1	26	26
27	27				1100		1600		500	CENTRIFUGE	20	1	28	28
29	29	20	1	ANALYTICAL HPLC	1200			1700	500	WALK-IN REF. ACCESSORY	20	1	30	30
31	31	20	1	PREP. LAMINAR FLOW HOOD	1200	1200			0	SPARE	20	1	32	32
33	33	20	1	ELECTRON MICROSCOPE	1920		3120		1200	ANAEROBIC CHAMBER	20	1	34	34
35	35	20	1	PREP. HOOD ACCESSORIES	500			680	180	RECEPTACLE	20	1	36	36
37	37	FEED-THRU LUGS		PANEL 'EQS2 '	7820	7820			0	120kA SURGE PROTECTIVE DEVICE	30	3	38	38
39	39				9800		9800		0				40	40
41	41				7760			7760	0				42	42
				TOTAL CONNECTED LOAD (VA) :		15390	24600	18610						
				25% LCL/LML (VA) :		0	0	0						
				TOTAL CALCULATED LOAD (VA) :		15390	24600	18610	TOTAL CALCULATED LOAD FOR PANEL:					
				TOTAL CALCULATED LOAD (AMPS) :		128.3	205.0	155.1	58600 VA					

PANEL: EQS2

225 AMP BUS | MAIN: MLO | LOCATION: ELECTRICAL ROOM 232
NEW EQUIPMENT | 120/208V, 3 PH, 4 W | MOUNTING: RECESSED PER DETAIL 26/E603.2
PANELBOARD | 100% RATED NEUTRAL | A.I.C.: 22000 A | ENCLOSURE: NEMA 1

CIRCUIT CKT NO.	CIRCUIT PNL SPACE	BREAKER AMP	BREAKER POLE	SERVES	VOLT-AMPERES LOAD	A	B	C	LOAD	SERVES	BREAKER AMP	BREAKER POLE	CIRCUIT PNL SPACE	CIRCUIT CKT NO.
1	1	20	1	RECEPTACLES - COUNTERTOP	540	1080			540	RECEPTS-WORK BENCH RM 203	20	1	2	2
3	3	20	1	RECEPTACLE - INCUBATORS	1440		1980		540	RECEPTS-WORK BENCH RM 203	20	1	4	4
5	5	20	1	CHEM. HOOD ACCESSORIES	500			1040	540	RECEPTS-WORK BENCH RM 203	20	1	6	6
7	7	20	1	CHEM. HOOD ACCESSORIES	500	1040			540	RECEPTS-WORK BENCH RM 203	20	1	8	8
9	9	20	1	CHEM. HOOD ACCESSORIES	500		1040		540	RECEPTS-WORK BENCH RM 203	20	1	10	10
11	11	20	1	CHEM. HOOD ACCESSORIES	500			1040	540	RECEPTS-WORK BENCH RM 203	20	1	12	12
13	13	20	1	CHEM. HOOD ACCESSORIES	500	860			360	RECEPTS-WORK BENCH RM 203	20	1	14	14
15	15	20	1	CHEM. HOOD ACCESSORIES	500		1940		1440	RECEPTACLE - INCUBATORS	20	1	16	16
17	17	20	1	CHEM. HOOD ACCESSORIES	500			1040	540	RECEPTACLES - COUNTERTOP	20	1	18	18
19	19	20	1	CHEM. HOOD ACCESSORIES	500	1040			540	RECEPTACLES - COUNTERTOP	20	1	20	20
21	21	20	1	BIO. LAMINAR FLOW HOOD	1200		1740		540	RECEPTS - LOBBY & FLOORBOX	20	1	22	22
23	23	20	1	BIO. LAMINAR FLOW HOOD	1200			1740	540	RECEPTACLES - ROOM 203/204	20	1	24	24
25	25	20	1	BIO. LAMINAR FLOW HOOD	1200	2000			800	PROJECTOR & MOTOR SCREEN	20	1	26	26
27	27	20	1	RECEPTS-WORK BENCH RM 202	540		840		300	BENCHTOP NMR	20	1	28	28
29	29	20	1	RECEPTS-WORK BENCH RM 202	540			840	300	FLUOR. & ABS. SPECTROMETER	20	1	30	30
31	31	20	1	RECEPTS-WORK BENCH RM 202	540	900			360	RECEPTACLES - PC & PRINTER	20	1	32	32
33	33	20	1	RECEPTS-WORK BENCH RM 202	540		1540		1000	CT SCANNER ROOM 204	20	1	34	34
35	35	20	1	RECEPTS-WORK BENCH RM 202	540			1340	800	PROJECTOR & MOTOR SCREEN	20	1	36	36
37	37	20	1	RECEPTS-WORK BENCH RM 202	540	900			360	RECEPTS-WORK BENCH RM 204	20	1	38	38
39	39	20	1	RECEPTS-WORK BENCH RM 202	360		720		360	RECEPTACLES - BALCONY	20	1	40	40
41	41	20	1	RECEPTACLES - ROOM 202	720			720	0	SPARE	20	1	42	42
				TOTAL CONNECTED LOAD (VA) :		7820	9800	7760						
				25% LCL/LML (VA) :		0	0	0						
				TOTAL CALCULATED LOAD (VA) :		7820	9800	7760	TOTAL CALCULATED LOAD FOR PANEL:					
				TOTAL CALCULATED LOAD (AMPS) :		65.2	81.7	64.7	25380 VA					

PANEL: EQH1

225 AMP BUS | MAIN: 225A CB | LOCATION: ELECTRICAL ROOM 232
NEW EQUIPMENT | 277/480V, 3 PH, 4 W | TRIP: THERMAL-MAGNETIC | MOUNTING: SURFACE PER DETAIL 12/E602.2
PANELBOARD | 100% RATED NEUTRAL | A.I.C.: 22000 A | ENCLOSURE: NEMA 1

CIRCUIT CKT NO.	CIRCUIT PNL SPACE	BREAKER AMP	BREAKER POLE	SERVES	VOLT-AMPERES LOAD	A	B	C	LOAD	SERVES	BREAKER AMP	BREAKER POLE	CIRCUIT PNL SPACE	CIRCUIT CKT NO.
1	1				5956	8005			2050				2	2
3	3	40	3	AIR COMPRESSOR 'AC-1'	5956		8066		2050	VACUUM PUMP 'VP-1'	15	3	4	4
5	5				5956			8066	2050				6	6
7	7	20	1	SPARE	0	0			0	SPARE	20	1	8	8
9	9	20	1	SPARE	0		0		0	SPARE	20	1	10	10
11	11	20	1	SPARE	0			0	0	SPARE	20	1	12	12
13	13	20	1	SPARE	0	0			0	SPARE	20	1	14	14
15	15	20	1	SPARE	0		0		0	SPARE	20	1	16	16
17	17	20	1	SPARE	0			0	0	SPARE	20	1	18	18
19	19	20	1	SPARE	0	0			0	SPARE	20	1	20	20
21	21	20	1	SPARE	0		0		0	SPARE	20	1	22	22
23	23	20	1	SPARE	0			0	0	SPARE	20	1	24	24
25	25	20	1	SPARE	0	0			0	SPARE	20	1	26	26
27	27	20	1	SPARE	0		0		0	SPARE	20	1	28	28
29	29	20	1	SPARE	0			0	0	SPARE	20	1	30	30
31	31	20	1	SPARE	0	0			0	SPARE	20	1	32	32
33	33	20	1	SPARE	0		0		0	SPARE	20	1	34	34
35	35	20	1	SPARE	0			0	0	SPARE	20	1	36	36
37	37	20	1	SPARE	0	0			0	SPARE	20	1	38	38
39	39	20	1	SPARE	0		0		0	SPARE	20	1	40	40
41	41	20	1	SPARE	0			0	0	SPARE	20	1	42	42
				TOTAL CONNECTED LOAD (VA) :		8005	8006	8006						
				25% LCL/LML (VA) :		0	0	0						
				TOTAL CALCULATED LOAD (VA) :		8005	8006	8006	TOTAL CALCULATED LOAD FOR PANEL:					
				TOTAL CALCULATED LOAD (AMPS) :		28.9	28.9	28.9	24017 VA					

PANEL: EQL1

150 AMP BUS | MAIN: 150A CB | LOCATION: ELECTRICAL ROOM 127
NEW | 120/208V, 3 PH, 4 W | TRIP: THERMAL-MAGNETIC | MOUNTING: SURFACE PER DETAIL 12/E602.2
PANELBOARD | 100% RATED NEUTRAL | A.I.C.: 10000 A | ENCLOSURE: NEMA 1

CIRCUIT CKT NO.	CIRCUIT PNL SPACE	BREAKER AMP	BREAKER POLE	SERVES	VOLT-AMPERES LOAD	A	B	C	LOAD	SERVES	BREAKER AMP	BREAKER POLE	CIRCUIT PNL SPACE	CIRCUIT CKT NO.
1	1				564	2712			2148	RECIRCUILATION SYSTEM (DI-1)	40	1	2	2
3	3	15	3	RECIRCULATION SYSTEM (RO-1)	564		2244		1680	REVERSE OSMOSIS UNIT(RO-1)	20	1	4	4
5	5				567			2247	1680	REVERSE OSMOSIS UNIT (DI-1)	20	1	6	6
7	7				1356	1856			500	WATER SOFTNER 'WS-1'	20	1	8	8
9	9	30	3	BOOSTER PUMP 'BP-1'	1356		1856		500	NEUTRAL TANK MON 'NT-1'	20	1	10	10
11	11				1356			1856	500	WATER HEATER 'WH-1'	15	1	12	12
13	13	20	1	DRINKING FOUNTAIN 'DF-1'	375	875			500	CIRCUILUATION PUMP 'CP-1'	15	1	14	14
15	15	20	1	DRINKING FOUNTAIN 'DF-1'	375		395		20	FIRE SPRNKLR BELL THRU 24V Tx	15	1	16	16
17	17	20	2	WHEEL CHAIR ACCESIBILITY	1920			2100	180	RECEPT ELEVATOR 2 PIT	20	1	18	18
19	19				1920	2100			180	RECEPT ELEV 2 MACH ROOM	20	1	20	20
21	21	20	1	FIRE/SMOKE DAMPERS	500		680		180	ELEVATOR 2 CAB LIGHT	20	1	22	22
23	23	20	1	DUCT SMOKE DETECTORS	500			550	50	ELEVATOR SHUNT TRIP CIRCUIT	20	1	24	24
25	25	20	1	SPARE	0	180			180	RECEPT ELEVATOR 1 PIT	20	1	26	26
27	27	20	1	SPARE	0		180		180	RECEPT ELEV 1 MACH ROOM	20	1	28	28
29	29	20	1	SPARE	0			180	180	ELEVATOR 1 CAB LIGHT	20	1	30	30
31	31	20	1	SPARE	0	540			540	RECEPTS - RESTROOM & JAN.	20	1	32	32
33	33	20	1	SPARE	0		180		180	RECEPT - WASHING MACHINE	20	1	34	34
35	35	20	1	SPARE	0			0	0	SPARE	20	1	36	36
37	37	20	1	SPARE	0	0			0	SPARE	20	1	38	38
39	39	20	1	SPARE	0		0		0	SPARE	20	1	40	40
41	41	20	1	SPARE	0			0	0	SPARE	20	1	42	42
				TOTAL CONNECTED LOAD (VA) :		8263	5535	6933						
				25% LCL/LML (VA) :		0	0	0						
				TOTAL CALCULATED LOAD (VA) :		8263	5535	6933	TOTAL CALCULATED LOAD FOR PANEL:					
				TOTAL CALCULATED LOAD (AMPS) :		68.9	46.1	57.8	20731 VA					

IDENTIFICATION STAMP
DIV. OF THE STATE ARCHITECT
APP: 02-122821 INC: 2
REVIEWED FOR
SS ☑ FLS ☑ ACS ☑
DATE: 11/20/2025

Teter, Inc. expressly reserves its common law copyright and other property rights in these plans. This document, the ideas and designs incorporated herein, as an instrument of professional service, is not to be used in whole or part, for any other project without prior written authorization.

MARK	DATE	DESCRIPTION
A	11/13/2025	DSA BACKCHECK

08/21/2025

TETER, INC.
ARCHITECTS ENGINEERS CONNECTED
FRESNO HEADQUARTERS
VISALIA | BAKERSFIELD | MODESTO | SAN LUIS OBISPO

VISALIA CAMPUS UNIVERSITY CENTER
COLLEGE OF THE SEQUOIAS
915 S. MOONEY BLVD
VISALIA, CA

DRAWING TITLE: PANEL SCHEDULES

PROJECT NO. 22-12498

DRAWING E803.2

\\tet-file1\Users\gene.vea_TETER\Documents\12498-E-UC_gene.vea.rvt

PANEL: R5

200 AMP BUS | MAIN: 200A CB | LOCATION: FACULTY OFFICE 210A
NEW RECEPTACLE | 120/208V, 3 PH, 4 W | TRIP: THERMAL-MAGNETIC | MOUNTING: RECESSED PER DETAIL 26/E603.2
PANELBOARD | 100% RATED NEUTRAL | A.I.C.: 22000 A | ENCLOSURE: NEMA 1

CIRCUIT CKT NO.	CIRCUIT PNL SPACE	BREAKER AMP	BREAKER POLE	SERVES	VOLT-AMPERES LOAD	A	B	C	LOAD	SERVES	BREAKER AMP	BREAKER POLE	CIRCUIT PNL SPACE	CIRCUIT CKT NO.
1	1	20	1	ELEC DRINKING FOUNTAIN	550	1990			1440	RECEPTS - LOBBY FLRBX	20	1	2	2
3	3	20	1	RECEPT - CORR/RR	900		2340		1440	RECEPTS-FLRBX RM 212	20	1	4	4
5	5	20	1	RECEPT - FLOOR BOXES	720			1800	1080	RECEPTACLES - ROOM 212	20	1	6	6
7	7	20	1	RECEPT - JAN CLOSET/RR	1260	1980			720	RECEPTACLES - ROOM 212	20	1	8	8
9	9	20	1	RECEPT - COPIER	180		360		180	RECEPTS - MEETING RM 208	20	1	10	10
11	11	20	1	RECEPTACLE - COUNTERTOP	540			1980	1440	RECEPTS - MEETING RM 207	20	1	12	12
13	13	20	1	RECEPT-GARBAGE DISPOSAL	180	1620			1440	RECEPTS-FLRBX RM 214	20	1	14	14
15	15	20	1	RECEPTS - BACK CNTR FLRBX	550		1630		1080	RECEPTACLES - ROOM 214	20	1	16	16
17	17	20	1	RECEPTACLE - FAC OFFICE	720			1440	720	RECEPTACLES - ROOM 214	20	1	18	18
19	19	20	1	RECEPTACLE - FAC OFFICE	720	900			180	RECEPTACLES - ROOM 214	20	1	20	20
21	21	20	1	RECEPTACLE - MEETING RM	1080		2520		1440	RECEPTS-FLRBX RM 216	20	1	22	22
23	23	20	1	RECEPTS - RR & CORR 103	1080			2520	1440	RECEPTS-FLRBX RM 216	20	1	24	24
25	25	20	1	RECEPT - NETWORK PRINTER	180	1260			1080	RECEPTACLES - ROOM 216	20	1	26	26
27	27	20	1	RECEPTACLE - MONITOR	180		900		720	RECEPTACLES - ROOM 216	20	1	28	28
29	29	20	1	RECEPTS - A/V DISPLAY WALL	1000			1180	180	RECEPTACLES - ROOM 216	20	1	30	30
31	31	20	1	RECEPT - STAIRWAY & RR	1080	1168			88	LIGHTING - COR200	20	1	32	32
33	33	20	1	LOBBY TRACK LIGHTS	374		374		0	SPARE	20	1	34	34
35	35	20	1	LOBBY TRACK LIGHTS	434			434	0	SPARE	20	1	36	36
37	37	20	1	RECEPTS - STOR 128 & 129	0	0			0	SPARE	20	1	38	38
39	39	20	1	RECEPTS - MECH RM 106	0		0		0	SPARE	20	1	40	40
41	41	20	1	SPARE	0			360	360	RECEPTACLES - GFCI &...	20	1	42	42
				TOTAL CONNECTED LOAD (VA) :		8918	8124	9714						
				DEMAND FACTOR FOR RECEPTACLES >...		0	0	0						
				TOTAL CALCULATED LOAD (VA) :		8918	8124	9714	TOTAL CALCULATED LOAD FOR PANEL:					
				TOTAL CALCULATED LOAD (AMPS) :		74.3	67.7	81.0	26756 VA					

PANEL: R6

100 AMP BUS | MAIN: 100A CB | LOCATION: ROOM 101C
NEW RECEPTACLE | 120/208V, 3 PH, 4 W | TRIP: THERMAL-MAGNETIC | MOUNTING: SURFACE PER DETAIL 12/E602.2
PANELBOARD | 100% RATED NEUTRAL | A.I.C.: 10000 A | ENCLOSURE: NEMA 1

CIRCUIT CKT NO.	CIRCUIT PNL SPACE	BREAKER AMP	BREAKER POLE	SERVES	VOLT-AMPERES LOAD	A	B	C	LOAD	SERVES	BREAKER AMP	BREAKER POLE	CIRCUIT PNL SPACE	CIRCUIT CKT NO.
1	1	20	1	RECEPTS - RM 101 FLOORBOX	360	540			180	RECEPT - STOR ROOM 101D	20	1	2	2
3	3	20	1	RECEPTS - RM 101 FLOORBOX	360		720		360	RECEPT - AV EQUIP RACK	20	1	4	4
5	5	20	1	RECEPTS - RM 101 FLOORBOX	360			360	0	SPARE	20	1	6	6
7	7	20	1	RECEPTACLES - MEET RM 110B	360	360			0	SPARE	20	1	8	8
9	9	20	1	RECEPT - RM 101 PROJECTOR	180		430		250	DUCT SMOKE DETECTORS	20	1	10	10
11	11	20	1	RECEPTACLES - VESTIBULE	720			720	0	SPARE	20	1	12	12
13	13	20	1	RECEPT-EXTERIOR WP...	180	180			0	SPARE	20	1	14	14
15	15	20	1	RECEPTS - LECTURE RM 101	720		720		0	SPARE	20	1	16	16
17	17	20	1	SPARE	0			0	0	SPARE	20	1	18	18
19	19	20	1	SPARE	0	0			0	SPARE	20	1	20	20
21	21	20	1	SPARE	0		48		48	STEP LIGHTS	20	1	22	22
23	23	20	1	SPARE	0			96	96	TAPE LIGHT POWER SUPPLY	20	1	24	24
25	25	20	1	SPARE	0	0			0	120kA SURGE PROTECTIVE DEVICE	30	3	26	26
27	27	20	1	SPARE	0		0		0				28	28
29	29	20	1	SPARE	0			0	0				30	30
				RECEPT - STAIRWAY & RR		1080	1918	1176						
				DEMAND FACTOR FOR RECEPTACLES >...		0	0	0						
				TOTAL CALCULATED LOAD (VA) :		1080	1918	1176	TOTAL CALCULATED LOAD FOR PANEL:					
				RECEPTS - STOR 128 & 129		9.0	16.0	9.8	RE... 4174 VA					

PANEL: R3

400 AMP BUS | MAIN: 300A CB | LOCATION: ELECTRICAL ROOM 232
NEW RECEPTACLE | 120/208V, 3 PH, 4 W | TRIP: THERMAL-MAGNETIC | MOUNTING: SURFACE PER DETAIL 12/E602.2
PANELBOARD | 100% RATED NEUTRAL | A.I.C.: 22000 A | ENCLOSURE: NEMA 1

CIRCUIT CKT NO.	CIRCUIT PNL SPACE	BREAKER AMP	BREAKER POLE	SERVES	VOLT-AMPERES LOAD	A	B	C	LOAD	SERVES	BREAKER AMP	BREAKER POLE	CIRCUIT PNL SPACE	CIRCUIT CKT NO.
1	1	20	1	RECEPTACLES - ROOM 217	720	2160			1440	RECEPTS-FLOOR BOX RM 211	20	1	2	2
3	3	20	1	RECEPTACLE - ROOM 217	180		1620		1440	RECEPTS-FLOOR BOX RM 211	20	1	4	4
5	5	20	1	RECEPTACLES - ROOM 217	1080			1980	900	RECEPTACLES - ROOM 211	20	1	6	6
7	7	20	1	RECEPTACLES - ROOM 217	180	900			720	RECEPTACLES - ROOM 211	20	1	8	8
9	9	20	1	RECEPTS-FLOOR BOX RM 217	1440		1620		180	RECEPTACLES - ROOM 211	20	1	10	10
11	11	20	1	RECEPTS-FLOOR BOX RM 217	1440			2880	1440	RECEPTS-FLOOR BOX RM 213	20	1	12	12
13	13	20	1	RECEPTS-FLOOR BOX RM 217	1440	2880			1440	RECEPTS-FLOOR BOX RM 213	20	1	14	14
15	15	20	1	RECEPTS-FLOOR BOX RM 217	1440		2520		1080	RECEPTACLES - ROOM 213	20	1	16	16
17	17	20	1	RECEPTS-FLOOR BOX RM 217	1440			2160	720	RECEPTACLES - ROOM 213	20	1	18	18
19	19	20	1	RECEPTS-FLOOR BOX RM 217	1440	1620			180	RECEPTACLES - ROOM 213	20	1	20	20
21	21	20	1	RECEPTS-FLOOR BOX RM 217	1440		2880		1440	RECEPTS-FLOOR BOX RM 215	20	1	22	22
23	23	20	1	RECEPTS-FLOOR BOX RM 217	1440			2880	1440	RECEPTS-FLOOR BOX RM 215	20	1	24	24
25	25	20	1	SPARE	0	1080			1080	RECEPTACLES - ROOM 215	20	1	26	26
27	27	20	1	SPARE	0		720		720	RECEPTACLES - ROOM 215	20	1	28	28
29	29	20	1	SPARE	0			180	180	RECEPTACLES - ROOM 215	20	1	30	30
31	31	20	1	SPARE	0	0			0	SPARE	20	1	32	32
33	33	20	1	SPARE	0		0		0	SPARE	20	1	34	34
35	35	20	1	SPARE	0			0	0	SPARE	20	1	36	36
37	37				8918	11716			2798				38	38
39	39	200	3	PANEL 'R5'	8124		11272		3148	PANEL 'R4'	200	3	40	40
41	41				9714			12774	3060				42	42
				TOTAL CONNECTED LOAD (VA) :		20356	20632	22854						
				DEMAND FACTOR FOR RECEPTACLES >...		0	0	0						
				TOTAL CALCULATED LOAD (VA) :		20356	20632	22854	TOTAL CALCULATED LOAD FOR PANEL:					
				TOTAL CALCULATED LOAD (AMPS) :		169.6	171.9	190.5	63842 VA					

PANEL: R4

200 AMP BUS | MAIN: 200A CB | LOCATION: ELECTRICAL ROOM 232
NEW RECEPTACLE | 120/208V, 3 PH, 4 W | TRIP: THERMAL-MAGNETIC | MOUNTING: SURFACE PER DETAIL 12/E602.2
PANELBOARD | 100% RATED NEUTRAL | A.I.C.: 22000 A | ENCLOSURE: NEMA 1

CIRCUIT CKT NO.	CIRCUIT PNL SPACE	BREAKER AMP	BREAKER POLE	SERVES	VOLT-AMPERES LOAD	A	B	C	LOAD	SERVES	BREAKER AMP	BREAKER POLE	CIRCUIT PNL SPACE	CIRCUIT CKT NO.
1	1	20	1	LIGHTING - CORR 200	88	628			540	RECEPTACLES - RESTROOMS	20	1	2	2
3	3	20	1	LIGHTING - CORR 200	88		628		540	RECEPTACLES - LAC RM	20	1	4	4
5	5	20	1	SPARE	0			360	360	RECEPTS - STORAGE & CORR.	20	1	6	6
7	7	20	1	SPARE	0	550			550	RECEPTS - ELEC. DRINK FNTN	20	1	8	8
9	9	20	1	SPARE	0		1080		1080	RECEPTS - MEETING ROOM...	20	1	10	10
11	11	20	1	SPARE	0			1080	1080	RECEPTS - MEETING ROOM...	20	1	12	12
13	13	20	1	SPARE	0	720			720	RECEPTS - MEETING ROOM	20	1	14	14
15	15	20	1	SPARE	0		1260		1260	RECEPTS - MEETING ROOM	20	1	16	16
17	17	20	1	SPARE	0			360	360	RECEPTACLES - CORR. 200	20	1	18	18
19	19	20	1	SPARE	0	0			0	SPARE	20	1	20	20
21	21	20	1	SPARE	0		0		0	SPARE	20	1	22	22
23	23	20	1	SPARE	0			0	0	SPARE	20	1	24	24
25	25	20	1	SPARE	0	0			0	SPARE	20	1	26	26
27	27	20	1	SPARE	0		0		0	SPARE	20	1	28	28
29	29	20	1	SPARE	0			0	0	SPARE	20	1	30	30
31	31	20	1	SPARE	0	0			0	SPARE	20	1	32	32
33	33	20	1	SPARE	0		0		0	SPARE	20	1	34	34
35	35	20	1	SPARE	0			0	0	SPARE	20	1	36	36
37	37	20	1	SPARE	0	900			900	RECEPTACLES - STUDY AREA	20	1	38	38
39	39	20	1	SPARE	0		180		180	RECEPT. - ELEC ROOM GFCI	20	1	40	40
41	41	20	1	SPARE	0			1260	1260	RECEPTACLES - ROOFTOP	20	1	42	42
				TOTAL CONNECTED LOAD (VA) :		2798	3148	3060						
				DEMAND FACTOR FOR RECEPTACLES >...		0	0	0						
				TOTAL CALCULATED LOAD (VA) :		2798	3148	3060	TOTAL CALCULATED LOAD FOR PANEL:					
				TOTAL CALCULATED LOAD (AMPS) :		23.3	26.2	25.5	9006 VA					

PANEL: R1

200 AMP BUS | MAIN: 200A CB | LOCATION: ELECTRICAL ROOM 127
NEW RECEPTACLE | 120/208V, 3 PH, 4 W | TRIP: THERMAL-MAGNETIC | MOUNTING: SURFACE PER DETAIL 12/E602.2
PANELBOARD | 100% RATED NEUTRAL | A.I.C.: 22000 A | ENCLOSURE: NEMA 1

CIRCUIT CKT NO.	CIRCUIT PNL SPACE	BREAKER AMP	BREAKER POLE	SERVES	VOLT-AMPERES LOAD	A	B	C	LOAD	SERVES	BREAKER AMP	BREAKER POLE	CIRCUIT PNL SPACE	CIRCUIT CKT NO.
1	1	20	1	RECEPTACLE - ELECT ROOM	180	1620			1440	RECEPTS-FLOOR BOX RM 113	20	1	2	2
3	3	20	1	RECEPTACLE - REFRIGERATOR	550		1990		1440	RECEPTS-FLOOR BOX RM 113	20	1	4	4
5	5	20	1	RECEPTACLE - MICROWAVE	1180			2260	1080	RECEPTACLES - ROOM 113	20	1	6	6
7	7	20	1	RECEPTACLES - ROOM 111B	1800	2520			720	RECEPTACLES - ROOM 113	20	1	8	8
9	9	20	1	RECEPTACLE - COPIER	180		360		180	RECEPTACLES - ROOM 113	20	1	10	10
11	11	20	1	RECEPTACLES - ROOM 111A	720			720	0	SPARE	20	1	12	12
13	13	20	1	RECEPTACLE - OFFICE 111C	1080	2520			1440	RECEPTS-FLOOR BOX RM 115	20	1	14	14
15	15	20	1	RECEPTACLE - OFFICE 111D	1260		2700		1440	RECEPTS-FLOOR BOX RM 115	20	1	16	16
17	17	20	1	RECEPTACLE - OFFICE 111E	1260			2340	1080	RECEPTACLES - ROOM 115	20	1	18	18
19	19	20	1	RECEPTACLES -...	720	1440			720	RECEPTACLES - ROOM 115	20	1	20	20
21	21	20	1	RECEPTACLES - STUDY AREA	1080		1260		180	RECEPTACLES - ROOM 115	20	1	22	22
23	23	20	1	RECEPTS - RESTROOMS &...	720			720	0	SPARE	20	1	24	24
25	25	20	1	RECEPTACLES - ROOM 109A	1080	2520			1440	RECEPTS-FLOOR BOX RM 117	20	1	26	26
27	27	20	1	RECEPTACLES - ROOM 109	1440		2880		1440	RECEPTS-FLOOR BOX RM 117	20	1	28	28
29	29	20	1	SPARE	1080			2160	1080	RECEPTACLES - ROOM 117	20	1	30	30
31	31	20	1	RECEPTACLES - LOBBY	540	1260			720	RECEPTACLES - ROOM 117	20	1	32	32
33	33	20	1	RECEPTACLES - LOBBY	720		900		180	RECEPTACLES - ROOM 117	20	1	34	34
35	35	20	1	RECEPTACLE - LOBBY A/V	180			900	720	RECEPTS - STOR/MECH...	20	1	36	36
37	37	20	1	RECEPTACLE - STORAGE 128...	360	910			550	RECEPTACLE - REFRIGERATOR	20	1	38	38
39	39	20	1	RECEPTS - MECHANICAL...	540		876		336	LTG-COR102&RM102A (TRK)	20	1	40	40
41	41	20	1	CONDSATE LIFT PUMP	500			500	0	SPARE	20	1	42	42
43	43	20	1	CONDSATE LIFT PUMP	500	500			0	SPARE	20	1	44	44
45	45	20	1	SPARE	0		0		0	SPARE	20	1	46	46
47	47	20	1	SPARE	0			0	0	SPARE	20	1	48	48
49	49	20	1	SPARE	0	0			0	SPARE	20	1	50	50
51	51	20	1	SPARE	0		0		0	SPARE	20	1	52	52
53	53	20	1	SPARE	0			0	0	SPARE	20	1	54	54
				TOTAL CONNECTED LOAD (VA) :		13290	10966	9600						
				DEMAND FACTOR FOR RECEPTACLES >...		0	0	0						
				TOTAL CALCULATED LOAD (VA) :		13290	10966	9600	TOTAL CALCULATED LOAD FOR PANEL:					
				TOTAL CALCULATED LOAD (AMPS) :		110.8	91.4	80.0	33856 VA					

PANEL: R2

200 AMP BUS | MAIN: 200A CB | LOCATION: ELECTRICAL ROOM 127
NEW RECEPTACLE | 120/208V, 3 PH, 4 W | TRIP: THERMAL-MAGNETIC | MOUNTING: SURFACE PER DETAIL 12/E602.2
PANELBOARD | 100% RATED NEUTRAL | A.I.C.: 22000 A | ENCLOSURE: NEMA 1

CIRCUIT CKT NO.	CIRCUIT PNL SPACE	BREAKER AMP	BREAKER POLE	SERVES	VOLT-AMPERES LOAD	A	B	C	LOAD	SERVES	BREAKER AMP	BREAKER POLE	CIRCUIT PNL SPACE	CIRCUIT CKT NO.
1	1	20	1	RECEPT. - ELEC. DRINKING FOUNTAIN	550	730			180	RECEPTS - LOBBY...	20	1	2	2
3	3	20	1	RECEPTACLES - CORR. & RESTROOM	1260		2700		1440	RECEPTS-FLOOR BOX RM 114	20	1	4	4
5	5	20	1	RECEPTACLES - STUDY AREA	720			2160	1440	RECEPTS-FLOOR BOX RM 114	20	1	6	6
7	7	20	1	RECEPTACLES - MEETING ROOM 110B	1440	2520			1080	RECEPTACLES - ROOM 114	20	1	8	8
9	9	20	1	RECEPTACLES - ROOM 110B A/V	540		1260		720	RECEPTACLES - ROOM 114	20	1	10	10
11	11	20	1	RECEPTACLES - ROOM 110C	1080			1260	180	RECEPTACLES - ROOM 114	20	1	12	12
13	13	20	1	RECEPTACLES - ROOM 110D	1080	1800			720	RECEPTACLES - ROOM 116	20	1	14	14
15	15	20	1	RECEPTACLES - ROOM 110E	1440		1620		180	RECEPTACLE - ROOM 116	20	1	16	16
17	17	20	1	RECEPTACLES - ROOM 110A	1080			2160	1080	RECEPTACLES - ROOM 116	20	1	18	18
19	19	20	1	RECEPTACLES - ROOM 110A	180	360			180	RECEPTACLES - ROOM 116	20	1	20	20
21	21	20	1	RECEPTACLES - ROOM 110A	540		1980		1440	RECEPTS-FLOOR BOX RM 116	20	1	22	22
23	23	20	1	RECEPTACLES - MEETING ROOM 112B	1440			2880	1440	RECEPTS-FLOOR BOX RM 116	20	1	24	24
25	25	20	1	RECEPTACLES - ROOM 112B A/V	540	1980			1440	RECEPTS-FLOOR BOX RM 116	20	1	26	26
27	27	20	1	RECEPTACLES - ROOM 112C	1440		2880		1440	RECEPTS-FLOOR BOX RM 116	20	1	28	28
29	29	20	1	RECEPTACLES - ROOM 112D	1080			2520	1440	RECEPTS-FLOOR BOX RM 116	20	1	30	30
31	31	20	1	RECEPTACLES - ROOM 112E	1080	2520			1440	RECEPTS-FLOOR BOX RM 116	20	1	32	32
33	33	20	1	RECEPTACLES - ROOM 112A	900		2340		1440	RECEPTS-FLOOR BOX RM 116	20	1	34	34
35	35	20	1	RECEPTACLES - ROOM 112A	180			1620	1440	RECEPTS-FLOOR BOX RM 116	20	1	36	36
37	37	20	1	RECEPTACLES - ROOM 112A	540	900			360	RECEPT-FLOOR BOX RM 119	20	1	38	38
39	39	20	1	RECEPTACLE - PRINTER & CORR.	360		1260		900	RECEPTACLES - ROOM 102	20	1	40	40
41	41	20	1	SPARE	0			900	900	RECEPTACLES - ROOM 102	20	1	42	42
43	43	20	1	SPARE	0	0			0	SPARE	20	1	44	44
45	45	20	1	SPARE	0		0		0	SPARE	20	1	46	46
47	47	20	1	SPARE	0			0	0	SPARE	20	1	48	48
49	49	20	1	SPARE	0	0			0	SPARE	20	1	50	50
51	51	20	1	SPARE	0		0		0	SPARE	20	1	52	52
53	53	20	1	SPARE	0			0	0	SPARE	20	1	54	54
				TOTAL CONNECTED LOAD (VA) :		10810	14040	13500						
				DEMAND FACTOR FOR RECEPTACLES > 10kVA:		0	0	0						
				TOTAL CALCULATED LOAD (VA) :		10810	14040	13500	TOTAL CALCULATED LOAD FOR PANEL:					
				TOTAL CALCULATED LOAD (AMPS) :		90.1	117.0	112.5	38350 VA					

IDENTIFICATION STAMP
DIV. OF THE STATE ARCHITECT
APP: 02-122821 INC: 2
REVIEWED FOR
SS ☑ FLS ☑ ACS ☑
DATE: 11/20/2025

Teter, Inc. expressly reserves its common law copyright and other property rights in these plans. This document, the ideas and designs incorporated herein, as an instrument of professional service, is not to be used in whole or in part, for any other project without prior written authorization.

MARK	DATE	DESCRIPTION
A	11/13/2025	DSA BACKCHECK

08/21/2025

TETER, INC.
ARCHITECTS ENGINEERS CONNECTED
FRESNO HEADQUARTERS
VISALIA | BAKERSFIELD | MODESTO | SAN LUIS OBISPO

VISALIA CAMPUS UNIVERSITY CENTER
COLLEGE OF THE SEQUOIAS
915 S. MOONEY BLVD
VISALIA, CA

DRAWING TITLE: PANEL SCHEDULES

PROJECT NO. 22-12498

DRAWING E804.2

\\tet-file1\Users\gene.vea_TETER\Documents\12498-E-LIC_gene.vea.rvt

LIGHTING CONTROL PANEL

120/277V WITH SIXTEEN 30AMP RELAYS AND
CA TITLE 24 COMPLIANT ASTRONOMIC TIME CLOCK

LOCATION: ELECTRICAL ROOM 127
MOUNTING: SURFACE 12/E602.2
ENCLOSURE: NEMA 1

LOW VOLTAGE INPUT		HIGH VOLTAGE OUTPUT			
CONTROL SCHEME	DEVICE	PANEL	CIRCUIT	WATTAGE	DESCRIPTION
ATC*	Relay 1	L1	36	252	NORTH AND SOUTH INGRADE
ATC*	Relay 2	L1	36	747	SOUTH AND WEST INGRADE AND PLANTER
ATC*	Relay 3	L1	40	272	POLE LIGHTS SOUTH 'a'
ATC*	Relay 4	L1	40	348	POLE LIGHTS SOUTH 'b'
ATC*	Relay 5	L1	35	123	STEP AND BOLLARD LIGHTS
ATC*	Relay 6	L1	35	369	ROUND ABOUT BOLLARDS
ATC*	Relay 7	L1	38	144	CARPORT LIGHT FIXTURES
ATC*	Relay 8	L1	39	204	SITE LIGHT POLE NORTH 'a'
ATC*	Relay 9	L1	39	136	SITE LIGHT POLE NORTH 'b'
ATC*	Relay 10	L1	37	569	EXTERIOR CANOPY
ATC*	Relay 11				SPARE
ATC*	Relay 12	L1	42	63	EXTERIOR SOUTH SIGNAGE
ATC*	Relay 13	L1	18	20	BUILDING EXTERIOR - EAST ENTRY
ATC*	Relay 14	L1	18	30	BUILDING EXTERIOR - NORTH ENTRY
ATC*	Relay 15	L1	18	152	BUILDING EXTERIOR - ROOF
ATC*	Relay 16				SPARE
	SPACE				

NOTES:
* Astronomic Time Clock (ATC) through Title 24 compliant EMS System

PANEL: IT1

NEW IT ROOM
PANELBOARD

150 AMP BUS
120/208V, 3 PH, 4 W
100% RATED NEUTRAL

MAIN: 150A CB
TRIP: THERMAL-MAGNETIC
A.I.C.: 10000 A

LOCATION: DATA ROOM 126
MOUNTING: SURFACE PER DETAIL 12/E602.2
ENCLOSURE: NEMA 1

CIRCUIT CKT NO.	CIRCUIT PNL SPACE	BREAKER AMP	BREAKER POLE	SERVES	VOLT-AMPERES LOAD	A	B	C	LOAD	SERVES	BREAKER AMP	BREAKER POLE	CIRCUIT PNL SPACE	CIRCUIT CKT NO.
1	1	20	1	RECEPTACLES - N. WALL	360	3160			2800				2	2
3	3	20	1	RECEPTACLES - E. WALL	540		3340		2800	RACK 1	30	3	4	4
5	5	20	1	RECEPTACLES - S. WALL	360			3160	2800				6	6
7	7	20	1	RECEPTACLES - W. WALL	360	3160			2800				8	8
9	9	20	1	RECEPTACLE - GFCI	180		2980		2800	RACK 2	30	3	10	10
11	11	20	1	FIRE ALARM CONTROL PANEL	600			3400	2800				12	12
13	13	20	1	ACCESS CONTROL...	600	3400			2800				14	14
15	15	30	2	SPARE	0		2800		2800	RACK 3	30	3	16	16
17	17				0			2800	2800				18	18
19	19	20	1	RECEPTACLE - RACK 1	360	3160			2800				20	20
21	21	20	1	RECEPTACLE - RACK 2	360		3160		2800	RACK 4	30	3	22	22
23	23	20	1	RECEPTACLE - RACK 3	360			3160	2800				24	24
25	25	20	1	RECEPTACLE - RACK 4	360	360			0	SPARE	20	1	26	26
27	27	20	1	LIGHTING CONTROL GATEWAY	500		500		0	SPARE	20	1	28	28
29	29	20	1	SPARE	0			0	0	SPARE	20	1	30	30
31	31	20	1	SPARE	0	0			0	SPARE	20	1	32	32
33	33	20	1	SPARE	0		0		0	SPARE	20	1	34	34
35	35	30	1	SPARE	0			0	0	SPARE	20	1	36	36
37	37	30	1	SPARE	0	0			0				38	38
39	39	30	1	SPARE	0		0		0	120kA SURGE PROTECTIVE DEVICE	30	3	40	40
41	41	30	1	SPARE	0			0	0				42	42
				TOTAL CONNECTED LOAD (VA) :		13240	12780	12520						
				25% LCL/LML (VA) :		0	0	0						
				TOTAL CALCULATED LOAD (VA) :		13240	12780	12520	TOTAL CALCULATED LOAD FOR PANEL:					
				TOTAL CALCULATED LOAD (AMPS) :		110.3	106.5	104.3	38540 VA					

PANEL: IT2

NEW IT ROOM
PANELBOARD

100 AMP BUS
120/208V, 3 PH, 4 W
100% RATED NEUTRAL

MAIN: 100A CB
TRIP: THERMAL-MAGNETIC
A.I.C.: 10000 A

LOCATION: DATA ROOM 231
MOUNTING: SURFACE PER DETAIL 12/E602.2
ENCLOSURE: NEMA 1

CIRCUIT CKT NO.	CIRCUIT PNL SPACE	BREAKER AMP	BREAKER POLE	SERVES	VOLT-AMPERES LOAD	A	B	C	LOAD	SERVES	BREAKER AMP	BREAKER POLE	CIRCUIT PNL SPACE	CIRCUIT CKT NO.
1	1	20	1	RECEPTACLES - N. WALL	360	3160			2800				2	2
3	3	20	1	RECEPTACLES - E. WALL	360		3160		2800	RACK 1	30	3	4	4
5	5	20	1	RECEPTACLES - S. WALL	180			2980	2800				6	6
7	7	20	1	RECEPTACLES - W. WALL	180	2980			2800				8	8
9	9	20	1	FIRE ALARM BOOSTER PANEL	550		3350		2800	RACK 2	30	3	10	10
11	11	20	1	RECEPTACLE - RACK 1	360			3160	2800				12	12
13	13	20	1	RECEPTACLE - RACK 2	360	360			0				14	14
15	15	20	1	SPARE	0		0		0	SPARE	30	3	16	16
17	17	20	1	SPARE	0			0	0				18	18
19	19	20	1	SPARE	0	0			0	SPARE	20	1	20	20
21	21	20	1	SPARE	0		0		0	SPARE	20	1	22	22
23	23	20	1	SPARE	0			0	0	SPARE	20	1	24	24
25	25	20	1	EMS PANEL	500	500			0				26	26
27	27	20	1	EMS PANEL	500		500		0	120kA SURGE PROTECTIVE DEVICE	30	3	28	28
29	29	20	1	RECEPTACLE - GFCI	180			180	0				30	30
				TOTAL CONNECTED LOAD (VA) :		7000	7010	6320						
				25% LCL/LML (VA) :		0	0	0						
				TOTAL CALCULATED LOAD (VA) :		7000	7010	6320	TOTAL CALCULATED LOAD FOR PANEL:					
				TOTAL CALCULATED LOAD (AMPS) :		58.3	58.4	52.7	20330 VA					

PANEL: SBL

NEW STANDBY POWER
PANELBOARD

225 AMP BUS
120/208V, 3 PH, 4 W
100% RATED NEUTRAL

MAIN: 225A CB
TRIP: THERMAL-MAGNETIC
A.I.C.: 10000 A

LOCATION: ELECTRICAL ROOM 232
MOUNTING: SURFACE PER DETAIL 12/E602.2
ENCLOSURE: NEMA 1

CIRCUIT CKT NO.	CIRCUIT PNL SPACE	BREAKER AMP	BREAKER POLE	SERVES	VOLT-AMPERES LOAD	A	B	C	LOAD	SERVES	BREAKER AMP	BREAKER POLE	CIRCUIT PNL SPACE	CIRCUIT CKT NO.
1	1				13240	20240			7000				2	2
3	3	150	3	PANEL 'IT1'	12780		19790		7010	PANEL 'IT2'	100	3	4	4
5	5				12520			18840	6320				6	6
7	7	20	1	WALK-IN COOLER - LIGHTS	200	1100			900				8	8
9	9	20	1	WALK-IN COOLER-EVAP	500		1400		900	WALK-IN COOLER - CONDENSING UNIT	15	3	10	10
11	11	20	1	SCI. REFRIGERATOR/FREEZER	1476			2376	900				12	12
13	13	20	1	SCI. REFRIGERATOR/FREEZER	1476	1476			0	SPARE	20	1	14	14
15	15	20	1	SCI. REFRIGERATOR/FREEZER	1476		1476		0	SPARE	20	1	16	16
17	17	20	1	SPARE	0			696	696	EXHAUST FAN 'EF-4'	15	1	18	18
19	19	20	1	SPARE	0	0			0	SPARE	20	1	20	20
21	21	20	1	SPARE	0		0		0	SPARE	20	1	22	22
23	23	20	1	SPARE	0			0	0	SPARE	20	1	24	24
25	25	20	1	SPARE	0	0			0	SPARE	20	1	26	26
27	27	20	1	SPARE	0		0		0	SPARE	20	1	28	28
29	29	20	1	SPARE	0			0	0	SPARE	20	1	30	30
31	31	20	1	SPARE	0	0			0	SPARE	20	1	32	32
33	33	20	1	SPARE	0		0		0	SPARE	20	1	34	34
35	35	20	1	SPARE	0			0	0	SPARE	20	1	36	36
37	37	20	1	SPARE	0	0			0				38	38
39	39	20	1	SPARE	0		0		0	120kA SURGE PROTECTIVE DEVICE	30	3	40	40
41	41	20	1	SPARE	0			0	0				42	42
				TOTAL CONNECTED LOAD (VA) :		22816	22666	21912						
				25% LCL/LML (VA) :		0	0	0						
				TOTAL CALCULATED LOAD (VA) :		22816	22666	21912	TOTAL CALCULATED LOAD FOR PANEL:					
				TOTAL CALCULATED LOAD (AMPS) :		190.1	188.9	182.6	67394 VA					

PANEL: SBH

NEW STANDBY POWER
PANELBOARD

150 AMP BUS
277/480V, 3 PH, 4 W
100% RATED NEUTRAL

MAIN: 150A CB
TRIP: THERMAL-MAGNETIC
A.I.C.: 22000 A

LOCATION: ELECTRICAL ROOM 232
MOUNTING: SURFACE PER DETAIL 12/E602.2
ENCLOSURE: NEMA 1

CIRCUIT CKT NO.	CIRCUIT PNL SPACE	BREAKER AMP	BREAKER POLE	SERVES	VOLT-AMPERES LOAD	A	B	C	LOAD	SERVES	BREAKER AMP	BREAKER POLE	CIRCUIT PNL SPACE	CIRCUIT CKT NO.
1	1				22816	24921			2105				2	2
3	3	125	3	TRANSFORMER 'TSB'	22666		24771		2105	EXHAUST FAN 'EF-2'	15	3	4	4
5	5				21912			24017	2105				6	6
7	7				2105	3047			942				8	8
9	9	15	3	EXHAUST FAN 'EF-1'	2105		3047		942	EXHAUST FAN 'EF-3'	15	3	10	10
11	11				2105			3047	942				12	12
13	13	20	1	SPARE	0	0			0	SPARE	20	1	14	14
15	15	20	1	SPARE	0		0		0	SPARE	20	1	16	16
17	17	20	1	SPARE	0			0	0	SPARE	20	1	18	18
19	19	20	1	SPARE	0	0			0	SPARE	20	1	20	20
21	21	20	1	SPARE	0		0		0	SPARE	20	1	22	22
23	23	20	1	SPARE	0			0	0	SPARE	20	1	24	24
25	25	20	1	SPARE	0	0			0	SPARE	20	1	26	26
27	27	20	1	SPARE	0		0		0	SPARE	20	1	28	28
29	29	20	1	SPARE	0			0	0	SPARE	20	1	30	30
31	31	20	1	SPARE	0	0			0	SPARE	20	1	32	32
33	33	20	1	SPARE	0		0		0	SPARE	20	1	34	34
35	35	20	1	SPARE	0			0	0	SPARE	20	1	36	36
37	37	20	1	SPARE	0	0			0				38	38
39	39	20	1	SPARE			0		0	120kA SURGE PROTECTIVE DEVICE	30	3	40	40
41	41	20	1	SPARE	0			0	0				42	42
				TOTAL CONNECTED LOAD (VA) :		27968	27818	27064						
				25% LCL/LML (VA) :		526	526	526						
				TOTAL CALCULATED LOAD (VA) :		28494	28344	27590	TOTAL CALCULATED LOAD FOR PANEL:					
				TOTAL CALCULATED LOAD (AMPS) :		102.9	102.3	99.6	84429 VA					

IDENTIFICATION STAMP
DIV. OF THE STATE ARCHITECT
APP: 02-122821 INC: 2
REVIEWED FOR
SS ☑ FLS ☑ ACS ☑
DATE: 11/20/2025

Teter, Inc. expressly reserves its common law copyright and other property rights in these plans. This document, the ideas and designs incorporated herein, as an instrument of professional service, is not to be used in whole or in part, for any other project without prior written authorization.

MARK	DATE	DESCRIPTION
A	11/13/2025	DSA BACKCHECK



08/21/2025

TETER, INC.
ARCHITECTS ENGINEERS CONNECTED
FRESNO HEADQUARTERS
VISALIA | BAKERSFIELD | MODESTO | SAN LUIS OBISPO

VISALIA CAMPUS UNIVERSITY CENTER
COLLEGE OF THE SEQUOIAS
915 S. MOONEY BLVD
VISALIA, CA

DRAWING TITLE
PANEL SCHEDULES

PROJECT NO.
22-12498

DRAWING
E805.2

\\tet-file1\Users\gene.vea_TETR\Documents\12498-E-UC_gene.vea.rvt

IDENTIFICATION STAMP
DIV. OF THE STATE ARCHITECT
APP: 02-122821 INC: 2
REVIEWED FOR
SS ☑ FLS ☑ ACS ☑
DATE: 11/20/2025

Teter, Inc. expressly reserves its common law copyright and other property rights in these plans. This document, the ideas and designs incorporated herein, as an instrument of professional service, is not to be used in whole or in part, for any other project without prior written authorization.

MARK	DATE	DESCRIPTION
A	11/13/2025	DSA BACKCHECK

09/21/2025

STATE OF CALIFORNIA
Electrical Power Distribution
CALIFORNIA ENERGY COMMISSION

CERTIFICATE OF COMPLIANCE	NRCC-ELC-E
This document is used to demonstrate compliance with mandatory requirements in 130.5, for electrical systems in newly constructed nonresidential and hotel/motel occupancies and 160.6 and 160.9 for electrical systems in newly constructed multifamily occupancies. Additions and alterations to electrical service systems in nonresidential and hotel/motel occupancies will also use this document to demonstrate compliance per 141.0(a) or 141.0(b)2P for alterations. For multifamily addition or alterations compliance will be documented per 180.1(a) or 180.2 (b)4Bvii	
Project Name:	**Report Page:** (Page 1 of 6)
Project Address:	**Date Prepared:** 11/20/2024

A. GENERAL INFORMATION

01	Project Location (city)	02	Climate Zone	13
		03	Occupancy Types Within Project:	All Other OccupanciesClassroomConvention CenterData CenterOfficeSupport AreasWarehouse

B. PROJECT SCOPE

This table includes electrical systems that are within the scope of the permit application.

01	02	03	04	05	06	07
Electrical Service Designation/ Description	Scope of Work[1]	Rating[2] (kVA)	Utility Provided Metering System Exception to 130.5(a)/ 160.6(a)[3]	System subject to CA Elec Code Article 517 Exception to 130.5(a)and (b)	Demand Response Controls	Provides power to dwelling units/common living areas only in multifamily occupancy
Switchboard DPH	New electrical service equipment and meter	1330	☐	☐	Where required, demand response controls must be specified which are capable of receiving and automatically responding to at least one standards based messaging protocol which enables demand response after receiving a demand response signal. Sections 120.2/ 160.3, 130.1/ 160.5, and 130.3/ 160.5, and mechanical, indoor lighting, and sign lighting Certificate of Compliance documents will indicate when demand response controls are required.	☐

[1] FOOTNOTES: Adding only new feeders and branch circuits triggers Voltage Drop 130.5(c)/160.6(c), no other requirements from 130.5/160.6 are required.
[2] If common use areas in a multifamily are submetered, rating is for submeter size serving common use areas.
[3] Applicable if the utility company is providing a metering system that indicates instantaneous kW demand and kWh for a utility-defined period.

STATE OF CALIFORNIA
Electrical Power Distribution
CALIFORNIA ENERGY COMMISSION

CERTIFICATE OF COMPLIANCE	NRCC-ELC-E
Project Name:	**Report Page:** (Page 2 of 6)
	Date Prepared: 11/20/2024

C. COMPLIANCE RESULTS

Results in this table are automatically calculated from data input and calculations in Tables F through J. Note: if any cell on this table says "COMPLIES with Exceptional Conditions" refer to Table D. Exceptional Conditions for guidance or see applicable Table referenced below.

01		02		03		04	05	06
Service Electrical Metering 130.5(a)/ 160.6(a) (See Table F)	AND	Separation for Monitoring 130.5(b)/ 160.6(b) (See Table G)	AND	Voltage Drop 130.5(c)/ 160.6(c) (See Table H)	AND	Controlled Receptacles 130.5(d)/ 160.6(d) (See Table I)	Electric Ready 160.9 (See Table J)	**Compliance Results**
Yes	AND	Yes	AND	Yes	AND	Yes	Yes	COMPLIES

D. EXCEPTIONAL CONDITIONS

This table is auto-filled with uneditable comments because of selections made or data entered in tables throughout the form.

E. ADDITIONAL REMARKS

This table includes remarks made by the permit applicant to the Authority Having Jurisdiction.

F. SERVICE ELECTRICAL METERING

This table includes new or replacement electrical service systems OR equipment to demonstrate compliance with 130.5(a) / 160.6(a). For multifamily occupancies, submetered systems that provide power to common use areas must meet the following metering requirements. Submetered systems providing power to dwelling units do not.

01	02	03				04	05	
Electrical Service Designation/ Description	Rating[1] (kVA)	Required Metering Capabilities per Table 130.5-A				Location of Requirements in Construction Documents	Field Inspector	
		Instantaneous Demand (kW)	Historical Peak Demand (kW)	Tracking kWh for user-defined period	kWh per rate period		Pass	Fail
Switchboard DPH	1330	☒	☒	☒	☒	E700.2	☐	☐

[1] FOOTNOTES: If common use areas in a multifamily are submetered, rating is for submeter size serving common use areas.

STATE OF CALIFORNIA
Electrical Power Distribution
CALIFORNIA ENERGY COMMISSION

CERTIFICATE OF COMPLIANCE	NRCC-ELC-E
Project Name:	**Report Page:** (Page 3 of 6)
	Date Prepared: 11/20/2024

G. SEPARATION OF ELECTRICAL CIRCUITS FOR ENERGY MONITORING

This table includes entirely new or complete replacement electrical power distribution systems to demonstrate compliance with 130.5(b)/ 160.6(b). Any load types that are not included in the service do not need to be shown. For multifamily occupancies, submetered systems that provide power to dwelling units do not need to meet these separation requirements and therefore load types on those submetered systems also do not need to be shown.

01	02	03	04	05	
Load Type[1] per Table 130.5-B	Minimum Required Separation of Load per Table 130.5-B	Compliance Method[2]	Location of Requirements in Construction Documents	Field Inspector	
				Pass	Fail
Switchboard DPH					
Plug Loads and appliances less than 25kVA	All plug loads separated by floor, type or area Groups of plug loads exceeding 25 kVA connected load in an area less than 5000 sf	Method 1: Switchboards, motor control centers, or panelboard loads disaggregated for each load type	E700.2	☐	☐
HVAC systems and components	All HVAC in aggregate and each HVAC load rated at least 50 kVA	Method 1: Switchboards, motor control centers, or panelboard loads disaggregated for each load type	E700.2	☐	☐
Elevators, escalators, moving walkways	All loads in aggregate	Method 1: Switchboards, motor control centers, or panelboard loads disaggregated for each load type	E700.2	☐	☐
Renewable power sources (net or total)	Each group	Method 1: Switchboards, motor control centers, or panelboard loads disaggregated for each load type	E700.2	☐	☐

STATE OF CALIFORNIA
Electrical Power Distribution
CALIFORNIA ENERGY COMMISSION

CERTIFICATE OF COMPLIANCE	NRCC-ELC-E
Project Name:	**Report Page:** (Page 4 of 6)
	Date Prepared: 11/20/2024

G. SEPARATION OF ELECTRICAL CIRCUITS FOR ENERGY MONITORING

This table includes entirely new or complete replacement electrical power distribution systems to demonstrate compliance with 130.5(b)/ 160.6(b). Any load types that are not included in the service do not need to be shown. For multifamily occupancies, submetered systems that provide power to dwelling units do not need to meet these separation requirements and therefore load types on those submetered systems also do not need to be shown.

01	02	03	04	05	
Load Type per Table 130.5-B[1]	Minimum Required Separation of Load per Table 130.5-B	Compliance Method[2]	Location of Requirements in Construction Documents	Field Inspector	
				Pass	Fail
Lighting including exit, egress and exterior	All lighting disaggregated by floor, type or area	Method 1: Switchboards, motor control centers, or panelboard loads disaggregated for each load type	E700.2	☐	☐

** NOTES: If "Other*" is selected under Compliance Method above, please indicate how compliance has been achieved in the space provided below.*

[1] FOOTNOTES: For each separate load type, up to 10% of the connected load may be of any type.
[2] Method 1: Switchboards/ motor control centers/ panelboard loads disaggregated for each load type.
Method 2: Switchboards/ motor control centers/ panelboard supply other distribution equipment with loads disaggregated for each load type.
Method 3: Branch circuits serve load types individually and provisions for adding future branch circuit monitoring.
Method 4: Complete metering system measures and reports loads by type.
See Chapter 8 of the Nonresidential Compliance Manual for more detail on Compliance Methods.

H. VOLTAGE DROP

This table includes entirely new or complete replacement electrical power distribution systems, or alterations that add, modify or replace both feeders and branch circuits to demonstrate compliance with 130.5(c)/ 160.6(c). For alterations, only the altered circuits must demonstrate compliance per 141.0(b)2Pii/ 180.2(b)4Bviic.

01	02				03	04	05	
Electrical Service Designation/Description	Combined Voltage Drop on Installed Feeder/Branch Circuit Conductors Compliance Method				Location of Voltage Drop Calculations[1]	Sheet Number for Voltage Drop Calculations in Construction Documents	Field Inspector	
							Pass	Fail
Switchboard DPH	☒	Voltage drop less than 5%	☐	Permitted by CA Elec Code (Exception to 130.5(c))*	Attached	E700.2	☐	☐

** NOTES: If "Permitted by CA Elec Code *" is selected under Compliance Method above, please indicate where the exception applies in the space provided below.*

STATE OF CALIFORNIA
Electrical Power Distribution
CALIFORNIA ENERGY COMMISSION

CERTIFICATE OF COMPLIANCE	NRCC-ELC-E
Project Name:	**Report Page:** (Page 5 of 6)
	Date Prepared: 11/20/2024

H. VOLTAGE DROP

[1] FOOTNOTES: Voltage drop calculations may be attached to the permit application outside the construction documents if allowed by the Authority Having Jurisdiction. Select "attached" if applicable. If calculations will be the responsibility of the installing contractor, select "Contractor Responsible".

I. CIRCUIT CONTROLS FOR 120-VOLT RECEPTACLES AND CONTROLLED RECEPTACLES

This table includes entirely new or complete replacement electrical power distribution systems to demonstrate compliance with 130.5(d)/ 160.6(d).. Both controlled and uncontrolled receptacles must be provided in office areas, lobbies, conference rooms, kitchen areas in office spaces, copy rooms and hotel/motel guest rooms.

01	02	03	04	05	06	07	
Room name or Description	Location/ Type of Controlled Receptacles[1]	Shut-Off Controls	Demand Responsive Controls	Permanent Durable Marking Will be Used	Location of Requirements in Construction Documents	Field Inspector	
						Pass	Fail
Switchboard DPH	Within 6ft of uncontrolled receptacle	Auto Time-Switch with applicable overrides	Included w capabilities per 110.12(e)	☒	E210.2 & E220.2	☐	☐

** NOTES: If "Other*" is selected under Shut-Off Controls above, please indicate how compliance has been achieved in the space provided below.*

[1] FOOTNOTES: Receptacles dedicated to refrigerators and water dispensers in kitchens, located a minimum of 6ft above the floor specifically for clocks, network copiers, fax machines, A/V and data equipment other than personal computers in copy rooms, circuits rated more than 20 Amps, or connected to a UPS that are intended to be in continuous use and are marked to differentiate them from other receptacles or circuits are excepted from the requirements. .

J. ELECTRIC READY BUILDINGS

This section does not apply to this project.

K. DECLARATION OF REQUIRED CERTIFICATES OF INSTALLATION

Selections have been made based on information provided in this document. If any selection have been changed by permit applicant, an explanation should be included in Table E. Additional Remarks. These documents must be provided to the building inspector during construction and can be found online

Form/Title
NRCI-ELC-E - Must be submitted for all buildings

STATE OF CALIFORNIA
Electrical Power Distribution
CALIFORNIA ENERGY COMMISSION

CERTIFICATE OF COMPLIANCE	NRCC-ELC-E
Project Name:	**Report Page:** (Page 6 of 6)
Project Address:	**Date Prepared:** 11/20/2024

DOCUMENTATION AUTHOR'S DECLARATION STATEMENT

I certify that this Certificate of Compliance documentation is accurate and complete.

Documentation Author Name:	Documentation Author Signature:
Bryan Glass	
Company: Teter Architects & Engineers	Signature Date: 2024-11-22
Address: 7535 N. Palm Ave. Ste. 201	CEA/ HERS Certification Identification (if applicable):
City/State/Zip: Fresno, CA. 93711	Phone: 559-437-0887

RESPONSIBLE PERSON'S DECLARATION STATEMENT

I certify the following under penalty of perjury, under the laws of the State of California:

1. The information provided on this Certificate of Compliance is true and correct.
2. I am eligible under Division 3 of the Business and Professions Code to accept responsibility for the building design or system design identified on this Certificate of Compliance (responsible designer)
3. The energy features and performance specifications, materials, components, and manufactured devices for the building design or system design identified on this Certificate of Compliance conform to the requirements of Title 24, Part 1 and Part 6 of the California Code of Regulations.
4. The building design features or system design features identified on this Certificate of Compliance are consistent with the information provided on other applicable compliance documents, worksheets, calculations, plans and specifications submitted to the enforcement agency for approval with this building permit application.
5. I will ensure that a completed signed copy of this Certificate of Compliance shall be made available with the building permit(s) issued for the building, and made available to the enforcement agency for all applicable inspections. I understand that a completed signed copy of this Certificate of Compliance is required to be included with the documentation the builder provides to the building owner at occupancy.

Responsible Designer Name:	Responsible Designer Signature:
Bryan Glass	
Company: Teter Architects & Engineers	Date Signed: 2024-11-22
Address: 7535 N. Palm Ave Ste. 201	License: E-17773
City/State/Zip: Fresno CA 93711	Phone: 559-437-0887

TETER, INC.
FRESNO HEADQUARTERS
VISALIA | BAKERSFIELD | MODESTO | SAN LUIS OBISPO
ARCHITECTS ENGINEERS CONNECTED

VISALIA CAMPUS UNIVERSITY CENTER
COLLEGE OF THE SEQUOIAS
915 S. MOONEY BLVD
VISALIA, CA

PROJECT NO.
22-12498

DRAWING TITLE
ENERGY COMPLIANCE DOCUMENTS

DRAWING
E900.2

PLOT DATE: 9/4/2025 3:57:58 PM

\\tet-file1\Users\gene.vea_TETR\Documents\12498-E-UC_gene.vea.rvt

STATE OF CALIFORNIA
Solar And Battery
CALIFORNIA ENERGY COMMISSION

CERTIFICATE OF COMPLIANCE	NRCC-SAB-E
This document is used to demonstrate compliance with prescriptive PV and battery requirements in 140.10/ 170.2 for nonresidential, multifamily and mixed-use buildings and prescriptive solar thermal requirements in 170.2(d)3C for multifamily and hotel/ motel occupancies. When PV/battery/solar thermal requirements don't apply or are traded using the performance approach, this document demonstrates compliance with mandatory solar readiness requirements in 110.10/ 160.8 for newly constructed buildings which are either multifamily ten stories or fewer, hotel/motel ten stories or fewer or all other nonresidential buildings three stories or fewer. It is also used to demonstrate compliance with solar readiness in 110.10/ 160.8 for additions to nonresidential, multifamily or hotel/motel building types which add more than 2,000 ft² of roof area. Alterations, or additions of less than 2,000 ft² of roof area, are not required to comply with solar readiness, solar PV and battery requirements and do not need to complete this document.	
Project Name:	**Report Page:** (Page 1 of 6)
Project Address:	**Date Prepared:** 11/20/2024

A. GENERAL INFORMATION

01	Project Location (city)		04	Building Occupancies	All Other OccupanciesConvention CenterData CenterOfficeSupport AreasWarehouse
02	Climate Zone	13	05	Construction Type	New construction
03	Conditioned Floor Area (ft²)	47479	06	Number of Stories	Bldg <= 3 stories

B. PROJECT SCOPE

The compliance path the project is using to comply per 110.10(b)1B/ 140.10/ 170.2(g and h) is indicated below.

Compliance with Solar Photovoltaic (PV) and Battery Requirements in 140.10/ 170.2(g and h)

	01	
☒	Provided PV system and battery storage sized per 140.10/ 170.2 (g and h)	The project has included an installed PV system and battery storage system per requirements in 140.10/ 170.2(g and h) as documented in Table J.
☐	Exception to PV and Battery: Not enough Solar Access Roof Area	The total of all available Solar Access Roof Area(s) of the project site is less than three percent of the conditioned floor area as documented in Table J.
☐	Exception to PV and Battery: Required PV < 4kW	The required PV system size is less than 4 kW dc as documented in Table J..
☐	Exception to PV and Battery: No contiguous Solar Access Roof Area	The Solar Access Roof Area(s) of the project site contains less than 80 contiguous square feet as documented in Table J.
☐	Exception to PV and Battery: Can't meet snow load	The project has a roof design where the enforcement authority has verified it is not possible for the PV system, including panels, modules, components, supports, and attachments to the roof structure, to meet ASCE 7-16 Chapter 7, Snow Loads.
☐	Exception to PV and Battery: Multi-tenant without VNEM or Community Solar	The project is a multi-tenant building in an area where a load serving entity does not provide either a Virtual Net Metering (VNEM) or community solar program.
☐	The prescriptive PV/battery requirement has been traded off using the performance compliance approach as documented on the PRF Certificate of Compliance form.	

STATE OF CALIFORNIA
Solar And Battery
CALIFORNIA ENERGY COMMISSION

CERTIFICATE OF COMPLIANCE	NRCC-SAB-E
Project Name:	**Report Page:** (Page 2 of 6)
	Date Prepared: 11/20/2024

Compliance with Solar Thermal Water Heating Requirements in 170.2(d)3C (Multifamily and hotel/ motel occupancies only)

	01
☐	The project includes a hotel/motel or multifamily occupancy with a gas or propane central water-heating system (serves 2+ dwelling units) and includes a permanently installed domestic solar water-heating system to comply with 170.2(d)3C and Reference Residential Appendix RA4, as documented in Table H. Compliance meets Exception 2 to solar ready requirements in 110.10(b).

C. COMPLIANCE RESULTS

Results in this table are automatically calculated from data input and calculations in Tables F through I. Note: If any cell on this table says "DOES NOT COMPLY" or "COMPLIES with Exceptional Conditions" refer to Table D. for guidance or see the applicable Table referenced below.

Allocated Solar Zone				Installed PV System					Installed SWH System					Smart Tstat and Alternative EE Measure		Compliance Results
01		02		03		04			05		06			07	08	
Required Minimum Area (ft²)	<=	Designated Area (ft²)	OR	Required Minimum DC Power Rating (Watts)	<=	Designed DC Power Rating (Watts)	OR		Required Minimum Solar Savings Fraction	<=	Designed/Rated Solar Savings Fraction	OR		JA5 Compliant Thermostat Specified?	Alternative Energy Efficiency Measure	
(See Table F)				(See Tables G or J)					(See Table H)					(See Table I)		
	<=		OR	80,625	<=	82,000	OR			<=		OR				
Location in construction documents showing the location for inverters and metering equipment and a pathway for the routing of conduit/ plumbing to the electrical service/ water heating system per §110.10(c).																
Battery storage system design meets the minimum requirements in Joint Appendix JA12 and the minimum energy (kWh)/ power (kW) capacity per Table J.																COMPLIES

D. EXCEPTIONAL CONDITIONS

This table is auto-filled with uneditable comments because of selections made or data entered in tables throughout the form.

E. ADDITIONAL REMARKS

This table is includes remarks made by the permit applicant to the Authority Having Jurisdiction.

STATE OF CALIFORNIA
Solar And Battery
CALIFORNIA ENERGY COMMISSION

CERTIFICATE OF COMPLIANCE	NRCC-SAB-E
Project Name:	**Report Page:** (Page 3 of 6)
	Date Prepared: 11/20/2024

F. ALLOCATED SOLAR ZONE

This section does not apply to this project.

G. PERMANENTLY INSTALLED SOLAR PV FOR SOLAR READY EXCEPTION

This section does not apply to this project.

H. PERMANENTLY INSTALLED SOLAR HOT WATER SYSTEMS

This section does not apply to this project.

I. SMART THERMOSTATS AND ALTERNATIVE EFFICIENCY MEASURE FOR SOLAR READY EXCEPTION

This section does not apply to this project.

STATE OF CALIFORNIA
Solar And Battery
CALIFORNIA ENERGY COMMISSION

CERTIFICATE OF COMPLIANCE	NRCC-SAB-E
Project Name:	**Report Page:** (Page 4 of 6)
	Date Prepared: 11/20/2024

J. PHOTOVOLTAIC (PV) AND BATTERY SYSTEMS

This table documents compliance with prescriptive photovoltaic and battery system requirements in 140.10/ 170.2(g and h). Unless the project meets one of the listed exceptions, or trades-off PV in an energy model using performance path, 140.10/ 170.2(g and h) requires installed photovoltaic and battery systems for newly constructed buildings. The installed PV systems must meet the minimum requirements in Joint Appendix 11.

Photovoltaic (PV) System

01	02	03	04	05	06	07	08
Occupancy	Conditioned Floor Area (ft²)	Area of New Roof[1] (ft²)	Roof Area < 70% Solar Access[2] (ft²)	Plansheet or Document showing Solar Access Calculations	Occupied Roof Area[3] (ft²)	Solar Access Roof Area (SARA) (ft²)	Min Size of PV System Required (kWdc)
School or Classroom	49,463	31,041	0	E702.2	0	31,041	80.62
					Total Min Size PV System Required for all Spaces (kWdc):		80.62
					Total Size PV System in Design (kWdc):		82

[1]FOOTNOTES: Includes the area of the building's roof space capable of structurally supporting a PV system and the area of all roof space on covered parking areas, carports, and all other newly constructed structures on the site that are compatible with supporting a PV system per Title 24, Part 2 Section 1511.2.
[2]Solar access must be determined using CEC approved solar access calculation tools found at https://www.energy.ca.gov/programs-and-topics/programs/building-energy-efficiency-standards/solar-assessment-tools.
[3]As specified by CBC Section 503.1.4.

Battery Storage System

01	02	03	04	05
Space Type	Min Size of PV System Required (kWdc)	Rated Single Charge-Discharge AC Efficiency of Battery System[1]	Min Battery Rated Energy Capacity Required (kWh)	Min Power Capacity of Battery Required (kWdc)
School or Classroom	80.62	95	158.7	37.09
		Total Min Energy (kWh) and Power (kW) Capacity Required	158.7	37.09
		Total Energy (kWh) and Power (kW) Capacity in Design	186	50

[1]FOOTNOTE: Rated single charge-discharge cycle AC to AC (round trip) efficiency of the battery storage system

STATE OF CALIFORNIA
Solar And Battery
CALIFORNIA ENERGY COMMISSION

CERTIFICATE OF COMPLIANCE	NRCC-SAB-E
Project Name:	**Report Page:** (Page 5 of 6)
	Date Prepared: 11/20/2024

K. DECLARATION OF REQUIRED CERTIFICATES OF INSTALLATION

Selections have been made based on information provided in this document. If any selections have been changed by the permit applicant, an explanation should be included Table E. Additional Remarks and ExceptionalConditionMessageCCSABE += UserChangedSelectionInCI. These documents must be provided to the building inspector during construction and can be found online

Form/Title
NRCI-SAB-01-E - Must be submitted for all buildings that must comply with solar readiness or PV/Battery requirements.

L. DECLARATION OF REQUIRED CERTIFICATES OF ACCEPTANCE

There are no forms required for this project.

STATE OF CALIFORNIA
Solar And Battery
CALIFORNIA ENERGY COMMISSION

CERTIFICATE OF COMPLIANCE	NRCC-SAB-E
Project Address:	**Date Prepared:** 11/20/2024

DOCUMENTATION AUTHOR'S DECLARATION STATEMENT

I certify that this Certificate of Compliance documentation is accurate and complete.

Documentation Author Name: Bryan Glass	Documentation Author Signature:
Company: Teter Architects & Engineers	Signature Date: 2024-11-22
Address: 7535 N. Palm Ave. Ste. 201	CEA/ HERS Certification Identification (if applicable):
City/State/Zip: Fresno, CA. 93711	Phone: 559-437-0887

RESPONSIBLE PERSON'S DECLARATION STATEMENT

I certify the following under penalty of perjury, under the laws of the State of California:

1. The information provided on this Certificate of Compliance is true and correct.
2. I am eligible under Division 3 of the Business and Professions Code to accept responsibility for the building design or system design identified on this Certificate of Compliance (responsible designer)
3. The energy features and performance specifications, materials, components, and manufactured devices for the building design or system design identified on this Certificate of Compliance conform to the requirements of Title 24, Part 1 and Part 6 of the California Code of Regulations.
4. The building design features or system design features identified on this Certificate of Compliance are consistent with the information provided on other applicable compliance documents, worksheets, calculations, plans and specifications submitted to the enforcement agency for approval with this building permit application.
5. I will ensure that a completed signed copy of this Certificate of Compliance shall be made available with the building permit(s) issued for the building, and made available to the enforcement agency for all applicable inspections. I understand that a completed signed copy of this Certificate of Compliance is required to be included with the documentation the builder provides to the building owner at occupancy.

Responsible Designer Name: Bryan Glass	Responsible Designer Signature:
Company: Teter Architects & Engineers	Date Signed: 2024-11-22
Address: 7535 N. Palm Ave. Ste. 201	License: E-17773
City/State/Zip: Fresno, CA. 93711	Phone: 559-437-0887

IDENTIFICATION STAMP
DIV. OF THE STATE ARCHITECT
APP: 02-122821 INC: 2
REVIEWED FOR
SS ☑ FLS ☑ ACS ☑
DATE: 11/20/2025

Teter, Inc. expressly reserves its common law copyright and other property rights in these plans. This document, the ideas and designs incorporated herein, as an instrument of professional service, is not to be used in whole or in part, for any other project without prior written authorization.

MARK	DATE	DESCRIPTION
A.	11/13/2025	DSA BACKCHECK

08/21/2025

TETER, INC.
FRESNO HEADQUARTERS
VISALIA | BAKERSFIELD | MODESTO | SAN LUIS OBISPO
ARCHITECTS ENGINEERS CONNECTED

VISALIA CAMPUS UNIVERSITY CENTER
COLLEGE OF THE SEQUOIAS
915 S. MOONEY BLVD
VISALIA, CA

DRAWING TITLE
ENERGY COMPLIANCE DOCUMENTS

PROJECT NO.
22-12498

DRAWING
E901.2

PLOT DATE: 9/4/2025 3:58:18 PM

\\tet-file1\Users\gene.vea_TETR\Documents\12498-E-UC_gene.vea.rvt

STATE OF CALIFORNIA
Indoor Lighting
CALIFORNIA ENERGY COMMISSION

CERTIFICATE OF COMPLIANCE	NRCC-LTI-E
This document is used to demonstrate compliance with requirements in 110.9, 110.12(c), 130.0, 130.1, 140.6 and 141.0(b)2 for indoor lighting scopes using the prescriptive path for nonresidential and hotel/motel occupancies. It is also used to document compliance with requirements in 160.5, 170.2(e) and 180.2(b)4 for indoor lighting scopes using the prescriptive path for multifamily occupancies. Multifamily includes dormitory and senior living facilities.	
Project Name:	**Report Page:** **(Page 1 of 7)**
Project Address:	**Date Prepared:** 11/21/2024

A. GENERAL INFORMATION

01	Project Location (city)		04	Total Conditioned Floor Area (ft²)	0
02	Climate Zone	13	05	Total Unconditioned Floor Area (ft²)	2,059
03	Occupancy Types Within Project (select all that apply):		06	# of Stories (Habitable Above Grade)	1

● Classroom ● Convention Center ● Data Center ● Office ● Support Areas ● Warehouse ● All Other Occupancies

B. PROJECT SCOPE

This table includes any lighting systems that are within the scope of the permit application and are demonstrating compliance using the prescriptive path outlined in 140.6 / 170.2(e) or 141.0(b)2 / 180.2(b)4 for alterations.

Scope of Work	Conditioned Spaces		Unconditioned Spaces	
01	02	03	04	05
My Project Consists of (check all that apply):	Calculation Method	Area (ft²)	Calculation Method	Area (ft²)
☒ New Lighting System	Area Category Method	0	Area Category Method	2059
☐ New Lighting System - Parking Garage				
Total Area of Work (ft²)	0		2059	

STATE OF CALIFORNIA
Indoor Lighting
CALIFORNIA ENERGY COMMISSION

CERTIFICATE OF COMPLIANCE	NRCC-LTI-E
Project Name:	**Report Page:** **(Page 2 of 7)**
	Date Prepared: 11/21/2024

C. COMPLIANCE RESULTS

If any cell on this table says "DOES NOT COMPLY" or "COMPLIES with Exceptional Conditions" refer to Table D. for guidance.

Lighting in conditioned and unconditioned spaces must not be combined for compliance per 140.6(b)1 / 170.2(e)	Allowed Lighting Power per 140.6(b) / 170.2(e) (Watts)						Adjusted Lighting Power per 140.6(a) / 170.2(e) (Watts)						Compliance Results
	01	02	03	04		05	06	07		08			09
	Complete Building 140.6(c)1	Area Category 140.6(c)2 / 170.2(e)4	Area Category Additional 140.6(c)2G / 170.2(e)4Av (+)	Tailored 140.6(c)3 / 170.2(e)4B (+)	=	**Total Allowed** (Watts)	≥	Total Designed (Watts)	Adjustments PAF Lighting Control Credits 140.6(a)2 / 170.2(e)1B (-)	=	**Total Adjusted** (Watts) *Includes Adjustments		**05 must be >= 08 140.6 / 170.2(e)**
	(See Table I)	(See Table I)	(See Table J)	(See Table K)				(See Table F)	(See Table P)				
Conditioned					=		≥			=			
Unconditioned		823.6	0		=	824	≥	351	0	=	351		COMPLIES
Controls Compliance (See Table H for Details)													COMPLIES
Rated Power Reduction Compliance (See Table Q for Details)													

D. EXCEPTIONAL CONDITIONS

This table is auto-filled with uneditable comments because of selections made or data entered in tables throughout the form.

E. ADDITIONAL REMARKS

This table includes remarks made by the permit applicant to the Authority Having Jurisdiction.

STATE OF CALIFORNIA
Indoor Lighting
CALIFORNIA ENERGY COMMISSION

CERTIFICATE OF COMPLIANCE	NRCC-LTI-E
Project Name:	**Report Page:** **(Page 3 of 7)**
	Date Prepared: 11/21/2024

F. INDOOR LIGHTING FIXTURE SCHEDULE

This table includes all planned permanent and portable lighting other than dwelling unit/ hotel/ motel room lighting. Multifamily dwelling unit and hotel/motel room lighting is documented in Table T. If using Table T to document lighting in multifamily common use areas providing shared provisions for living, eating, cooking or sanitation, those luminaires are not included here.

Designed Wattage: Unconditioned Spaces

01	02	03	04	05	06	07	08	09	10	
Name or Item Tag	Complete Luminaire Description	Modular (Track) Fixture	Small Aperture & Color Change[1]	Watts per luminaire[2]	How is Wattage determined	Total Number of Luminaires	Excluded per 140.6(a)3 / 170.2(e)2C	Design Watts	Field Inspector	
									Pass	Fail
D3	D3	No	NA	27	Mfr. Spec	13	No	351	☐	☐
							Total Designed Watts: UNCONDITIONED SPACES	351		

[1] *FOOTNOTE: Design Watts for small aperture and color changing luminaires which qualify per 140.6(a)4B / 170.2(e)2D is adjusted to be 75% /80% of their rated wattage. Table F automatically makes this adjustment, the permit applicant should enter full rated wattage in column 05.*

[2] *Authority Having Jurisdiction may ask for Luminaire cut sheets to confirm wattage used for compliance per 130.0(c) / 160.5(b). Wattage used must be the maximum rated for the luminaire, not the lamp.*

G. MODULAR LIGHTING SYSTEMS

This section does not apply to this project.

H. INDOOR LIGHTING CONTROLS (Not including PAFs)

This table includes lighting controls for conditioned and unconditioned spaces.

Building Level Controls

01	02	03	
		Field Inspector	
		Pass	Fail
Mandatory Demand Response 110.12(c)	Shut-off controls 130.1(c) / 160.5(b)4C		
Required >= 4,000W subject to multilevel	Whole Building Auto Time Switch	☐	☐

STATE OF CALIFORNIA
Indoor Lighting
CALIFORNIA ENERGY COMMISSION

CERTIFICATE OF COMPLIANCE	NRCC-LTI-E
Project Name:	**Report Page:** **(Page 4 of 7)**
	Date Prepared: 11/21/2024

H. INDOOR LIGHTING CONTROLS (Not including PAFs)

Area Level Controls

04	05	06	07	08	09	10	11	12	
Area Description	Complete Building or Area Category Primary Function Area	Manual Area Controls 130.1(a) / 160.5(b)4A	Multi-Level Controls 130.1(b) / 160.5(b)4B	Shut-Off Controls 130.1(c) // 160.5(b)4C	Primary/Sky lit Daylighting 130.1(d) / 160.5(b)4D	Secondary Daylighting 130.1(d) / 160.5(b)4D	Interlocked Systems 140.6(a)1/ 170.2(e)2A	Field Inspector	
								Pass	Fail
					13				
					Plan Sheet Showing Daylit Zones:				

I. LIGHTING POWER ALLOWANCE: COMPLETE BUILDING OR AREA CATEGORY METHODS

Each area complying using the Complete Building or Area Category Methods per 140.6(b) are included in this table. Column 06 indicates if additional lighting power allowances per 140.6(c) or adjustments per 140.6(a) are being used .

Unconditioned Spaces

01	02	03	04	05	06	
Area Description	Complete Building or Area Category Primary Function Area	Allowed Density (W/ft²)	Area (ft²)	Allowed Wattage (Watts)	Additional Allowance / Adjustment	
					Area Category	PAF
Zone Sto. 101 C/D	Commercial Industrial Warehouse	0.4	559	223.6	No	No
128 Sto.	All Other Space Types	0.4	750	300	No	No
129 Sto.	All Other Space Types	0.4	750	300	No	No
		TOTALS:	2,059	823.6	See Tables J, or P for detail	

J. ADDITIONAL ALLOWANCE: AREA CATEGORY METHOD QUALIFYING LIGHTING SYSTEM

This section does not apply to this project.

STATE OF CALIFORNIA
Indoor Lighting
CALIFORNIA ENERGY COMMISSION

CERTIFICATE OF COMPLIANCE	NRCC-LTI-E
Project Name:	**Report Page:** **(Page 5 of 7)**
	Date Prepared: 11/21/2024

K. TAILORED METHOD GENERAL LIGHTING POWER ALLOWANCE

This section does not apply to this project.

L. ADDITIONAL LIGHTING ALLOWANCE: TAILORED WALL DISPLAY

This section does not apply to this project.

M. ADDITIONAL LIGHTING ALLOWANCE: TAILORED FLOOR AND TASK LIGHTING

This section does not apply to this project.

N. ADDITIONAL LIGHTING ALLOWANCE: TAILORED DECORATIVE /SPECIAL EFFECTS

This section does not apply to this project.

O. ADDITIONAL LIGHTING ALLOWANCE: TAILORED VERY VALUABLE MERCHANDISE

This section does not apply to this project.

P. POWER ADJUSTMENT: LIGHTING CONTROL CREDIT (POWER ADJUSTMENT FACTOR (PAF))

This section does not apply to this project.

Q. RATED POWER REDUCTION COMPLIANCE FOR ONE-FOR-ONE ALTERATIONS

This section does not apply to this project.

R. 80% LIGHTING POWER FOR ALL ALTERATIONS - CONTROLS EXCEPTIONS

This section does not apply to this project.

STATE OF CALIFORNIA
Indoor Lighting
CALIFORNIA ENERGY COMMISSION

CERTIFICATE OF COMPLIANCE	NRCC-LTI-E
Project Name:	**Report Page:** **(Page 6 of 7)**
	Date Prepared: 11/21/2024

S. DAYLIGHT DESIGN POWER ADJUSTMENT FACTOR (PAF)

This section does not apply to this project.

T. DWELLING UNIT LIGHTING

This section does not apply to this project.

U. DECLARATION OF REQUIRED CERTIFICATES OF INSTALLATION

Selections have been made based on information provided in this document. If any selections have been changed by permit applicant, an explanation should be included in Table E. Additional Remarks. These documents must be provided to the building inspector during construction and can be found online

Form/Title
NRCI-LTI-E - Must be submitted for all buildings

V. DECLARATION OF REQUIRED CERTIFICATES OF ACCEPTANCE

Selections have been made based on information provided in this document. If any selections have been changed by the permit applicant, an explanation should be included in Table E. Additional Remarks. These documents must be provided to the building inspector during construction and any with "-A" in the form name must be completed through an Acceptance Test Technician Certification Provider (ATTCP). For more information visit: http://www.energy.ca.gov/title24/attcp/providers.html

Form/Title	Systems/Spaces To Be Field Verified
NRCA-LTI-02-A - Must be submitted for occupancy sensors and automatic time switch controls.	Whole Building Time Switch;
NRCA-LTI-04-A - Must be submitted for demand responsive lighting controls.	Whole Building Demand Response;

STATE OF CALIFORNIA
Indoor Lighting
CALIFORNIA ENERGY COMMISSION

CERTIFICATE OF COMPLIANCE	NRCC-LTI-E
Project Name:	**Report Page:** **(Page 7 of 7)**
Project Address:	**Date Prepared:** 11/21/2024

DOCUMENTATION AUTHOR'S DECLARATION STATEMENT

I certify that this Certificate of Compliance documentation is accurate and complete.

Documentation Author Name: Bryan Glass	Documentation Author Signature:
Company: Teter Architects & Engineers	Signature Date: 2024-11-22
Address: 7535 N. Palm Ave. Ste. 201	CEA/ HERS Certification Identification (if applicable):
City/State/Zip: Fresno, CA. 93711	Phone: 559-437-0887

RESPONSIBLE PERSON'S DECLARATION STATEMENT

I certify the following under penalty of perjury, under the laws of the State of California:

1. The information provided on this Certificate of Compliance is true and correct.
2. I am eligible under Division 3 of the Business and Professions Code to accept responsibility for the building design or system design identified on this Certificate of Compliance (responsible designer)
3. The energy features and performance specifications, materials, components, and manufactured devices for the building design or system design identified on this Certificate of Compliance conform to the requirements of Title 24, Part 1 and Part 6 of the California Code of Regulations.
4. The building design features or system design features identified on this Certificate of Compliance are consistent with the information provided on other applicable compliance documents, worksheets, calculations, plans and specifications submitted to the enforcement agency for approval with this building permit application.
5. I will ensure that a completed signed copy of this Certificate of Compliance shall be made available with the building permit(s) issued for the building, and made available to the enforcement agency for all applicable inspections. I understand that a completed signed copy of this Certificate of Compliance is required to be included with the documentation the builder provides to the building owner at occupancy.

Responsible Designer Name: Bryan Glass	Responsible Designer Signature:
Company: Teter Architects & Engineers	Date Signed: 2024-11-22
Address: 7535 N. Palm Ave Ste. 201	License: E-17773
City/State/Zip: Fresno CA 93711	Phone: 559-437-0887

STATE OF CALIFORNIA
Outdoor Lighting
CALIFORNIA ENERGY COMMISSION

CERTIFICATE OF COMPLIANCE	NRCC-LTO-E
This document is used to demonstrate compliance with requirements in 110.9, 130.0, 130.2, 140.7, and 141.0(b)2L for outdoor lighting scopes using the prescriptive path for nonresidential and hotel/motel occupancies. It is also used to document compliance with requirements in 160.5, 170.2(e)6, 180.1(a) and 180.2(b)4Bv for outdoor lighting scopes using the prescriptive path for multifamily and mixed-use occupancies. Multifamily includes dormitory and senior living facilities.	
Project Name:	**Report Page:** **(Page 1 of 11)**
Project Address:	**Date Prepared:** 11/21/2024

A. GENERAL INFORMATION

01	Project Location (city)		04	Total Illuminated Hardscape Area (ft²)	57968
02	Climate Zone	13			
03	Outdoor Lighting Zone per Title 24 Part 1 10.114 or as designated by Authority Having Jurisdiction (AHJ):				
☐	LZ-0: Very Low - Undeveloped Parkland	☒	LZ-2: Moderate - Urban Clusters	☐	LZ-4: High - Must be reviewed by CA Energy Commission for Approval
☐	LZ-1: Low - Rural Areas	☐	LZ-3: Moderately High - Urban Areas		
05	Occupancy Types within Project				

● Classroom ● Convention Center ● Data Center ● Office ● Support Areas ● Warehouse ● Warehouse

B. PROJECT SCOPE

This table includes outdoor lighting systems that are within the scope of the permit application and are demonstrating compliance using the prescriptive path outlined in 140.7 / 170.2(e)6 or 141.0(b)2L / 180.2(b)4Bv for alterations.

My Project Consists of:

01	02		
☒	New Lighting System	Must Comply with Allowances from 140.7 / 170.2(e)6	
☐	Altered Lighting System	Is your alteration increasing the connected lighting load (Watts)? ○ Yes ○ No	
03		04	05
% of Existing Luminaires Being Altered[1]		Sum Total of Luminaires Being Added or Altered	Calculation Method
☐ < 10% ☐ >= 10% and < 50% ☐ >= 50%			

Please proceed to Table F. Outdoor Lighting Fixture Schedule to define the project's luminaires.

[1] *FOOTNOTES: % of Existing Luminaires Being Altered = (Sum Total of Luminaires Being Added or Altered / Existing Luminaires within the Scope of the Permit Application) x 100.*

STATE OF CALIFORNIA
Outdoor Lighting
CALIFORNIA ENERGY COMMISSION

CERTIFICATE OF COMPLIANCE	NRCC-LTO-E
Project Name:	**Report Page:** **(Page 2 of 11)**
	Date Prepared: 11/21/2024

C. COMPLIANCE RESULTS

Results in this table are automatically calculated from data input and calculations in Tables F through N. Note: If any cell on this table says "COMPLIES with Exceptional Conditions" refer to Table D. Exceptional Conditions for guidance or see applicable Table referenced below.

Calculations of Total Allowed Lighting Power (Watts) 140.7 / 170.2(e)6 or 141.0(b)2L / 180.2(b)4Bv												Compliance Results		
01		02		03		04		05	OR	06	=	07		08	09
General Hardscape Allowance 140.7(d)1 / 170.2(e)6 (See Table I)	+	Per Application 140.7(d)2 / 170.2(e)6 (See Table J)	+	Sales Frontage 140.7(d)2 (See Table K)	+	Ornamental 140.7(d)2 / 170.2(e)6 (See Table L)	+	Per Specific Area 140.7(d)2 / 170.2(e)6 (See Table M)		Existing Power Allowance 141.0(b)2L / 180.2(b)4Bv (See Table N)		**Total Allowed** (Watts)	≥	**Total Actual** (Watts)	**07 must be >= 08**
1,874	+	50	+	---	+	---	+	1,377.6	OR	---	=	3,301	≥	3,176	COMPLIES
Shielding Compliance (See Table G for Details)															COMPLIES
Controls Compliance (See Table H for Details)															COMPLIES

D. EXCEPTIONAL CONDITIONS

This table is auto-filled with uneditable comments because of selections made or data entered in tables throughout the form.

E. ADDITIONAL REMARKS

This table includes remarks made by the permit applicant to the Authority Having Jurisdiction.

IDENTIFICATION STAMP
DIV. OF THE STATE ARCHITECT
APP: 02-122821 INC: 2
REVIEWED FOR
SS ☑ FLS ☑ ACS ☑
DATE: 11/20/2025

Teter, Inc. expressly reserves its common law copyright and other property rights in these plans. This document, the ideas and designs incorporated herein, as an instrument of professional service, is not to be used in whole or in part, for any other project without prior written authorization.

MARK	DATE	DESCRIPTION
A	11/13/2025	DSA BACKCHECK

08/21/2025

REGISTERED PROFESSIONAL ENGINEER BRYAN A. GLASS No. E 17773 ELECTRICAL STATE OF CALIFORNIA

TETER, INC.
FRESNO HEADQUARTERS
VISALIA | BAKERSFIELD | MODESTO | SAN LUIS OBISPO
ARCHITECTS ENGINEERS CONNECTED

VISALIA CAMPUS UNIVERSITY CENTER
COLLEGE OF THE SEQUOIAS
915 S. MOONEY BLVD
VISALIA, CA

DRAWING TITLE
ENERGY COMPLIANCE DOCUMENTS

PROJECT NO.
22-12498

DRAWING
E902.2

PLOT DATE: 9/4/2025 3:58:38 PM

\\tet-file1\Users\gene.vea_TETR\Documents\12498-E-UC_gene.vea.rvt

STATE OF CALIFORNIA
Outdoor Lighting
CALIFORNIA ENERGY COMMISSION

CERTIFICATE OF COMPLIANCE	NRCC-LTO-E
Project Name:	Report Page: (Page 3 of 11)
	Date Prepared: 11/21/2024

F. OUTDOOR LIGHTING FIXTURE SCHEDULE

For new or altered lighting systems demonstrating compliance with 140.7 / 170.2(e)6 all new luminaires being installed and any existing luminaires remaining or being moved within the spaces covered by the permit application are included in the Table below. For altered lighting systems using the Existing Power method per 141.0(b)2L only new luminaires being installed and replacement luminaires being installed as part of the project scope are included (ie, existing luminaires remaining or existing luminaires being moved are not included). Outdoor lighting attached to multifamily buildings and controlled from the inside of a dwelling unit are included in Table H. and are not included here. All other multifamily outdoor lighting is included here.

Designed Wattage:

01	02		03	04	05	06	07	08	09	10	
Name or Item Tag	Complete Luminaire Description		Watts per luminaire[1, 2]	How is Wattage determined	Total Number Luminaires[2]	Luminaire Status[3]	Excluded per 140.7(a) / 170.2(e)6A	Design Watts	Cutoff Req. > 6,200 initial lumen output 130.2(b) / 160.5(c)1[4]	Field Inspector	
										Pass	Fail
B3	B3	☐ Linear	24.7	Mfr. Spec	28	New	☐	691.6	NA: < 6200 lumens	☐	☐
D2	D2	☐ Linear	24	Mfr. Spec	6	New	☐	144	NA: < 6200 lumens	☐	☐
H1	H1	☐ Linear	5	Mfr. Spec	49	New	☐	245	NA: < 6200 lumens	☐	☐
S1	S1	☐ Linear	68	Mfr. Spec	12	New	☐	816	Provided	☐	☐
S2	S2	☐ Linear	41	Mfr. Spec	12	New	☐	492	Provided	☐	☐
U1	U1	☐ Linear	12	Mfr. Spec	42	New	☐	504	NA: < 6200 lumens	☐	☐
U2	U2	☐ Linear	20	Mfr. Spec	4	New	☐	80	NA: < 6200 lumens	☐	☐
U3	U3	☐ Linear	23	Mfr. Spec	5	New	☐	115	NA: < 6200 lumens	☐	☐
W1	W1	☐ Linear	10	Mfr. Spec	5	New	☐	50	NA: < 6200 lumens	☐	☐
W4	W4	☐ Linear	19	Mfr. Spec	2	New	☐	38	NA: < 6200 lumens	☐	☐
							Total Design Watts:	3176			

STATE OF CALIFORNIA
Outdoor Lighting
CALIFORNIA ENERGY COMMISSION

CERTIFICATE OF COMPLIANCE	NRCC-LTO-E
Project Name:	Report Page: (Page 4 of 11)
	Date Prepared: 11/21/2024

F. OUTDOOR LIGHTING FIXTURE SCHEDULE

For new or altered lighting systems demonstrating compliance with 140.7 / 170.2(e)6 all new luminaires being installed and any existing luminaires remaining or being moved within the spaces covered by the permit application are included in the Table below. For altered lighting systems using the Existing Power method per 141.0(b)2L only new luminaires being installed and replacement luminaires being installed as part of the project scope are included (ie, existing luminaires remaining or existing luminaires being moved are not included). Outdoor lighting attached to multifamily buildings and controlled from the inside of a dwelling unit are included in Table H. and are not included here. All other multifamily outdoor lighting is included here.

Designed Wattage:

01	02	03	04	05	06	07	08	09	10
* NOTES: Selections with a * require a note in the space below explaining how compliance is achieved. *EX: Luminaire is lighting a statue; EXCEPTION 2 to 130.2(b)*									

[1] *FOOTNOTES: Authority Having Jurisdiction may ask for Luminaire cut sheets to confirm wattage used for compliance per 130.0(c) / 160.5(b)*
[2] *For linear luminaires, wattage should be indicated as W/lf instead of Watts/luminaire. Total linear feet should be indicated in column 05 instead of number of luminaires.*
[3] *Select "New" for new luminaires in a new outdoor lighting project, or for added luminaires in an alteration. Select "Altered" for replacement luminaires in an alteration. Select "Existing to Remain" for existing luminaires within the project scope that are not being altered and are remaining. Select "Existing Reinstalled" for existing luminaires which are being removed and reinstalled as part of the project scope.*
[4] *Compliance with mandatory shielding requirements is required for luminaires with initial lumen output >= 6,200 unless exempted by 130.2(b)/ 160.5(c)*

STATE OF CALIFORNIA
Outdoor Lighting
CALIFORNIA ENERGY COMMISSION

CERTIFICATE OF COMPLIANCE	NRCC-LTO-E
Project Name:	Report Page: (Page 5 of 11)
	Date Prepared: 11/21/2024

G. SHIELDING REQUIREMENTS (BUG)

This table includes fixtures of >=6,200 initial lumens indicated on Table F as needing to comply with Shielding Requirements. Maximum lumens can be found in Title 24, Part 11, Section 5.106.8.

01	02	03	04	05	06	07	08	09	10	11	12	
Name or Item Tag	Complete Luminaire Description	Backlight Rating[2]			Uplight Rating[2]			Glare Rating (Lumens)[2]			Field Inspector	
		Mounting Height[1]	Max Allowable Backlight Rating[3]	Backlight Rating Per Design	Lighting type	Max Allowable Uplight Rating[3]	Uplight Rating Per Design	Mounting Height[1]	Max Allowable Glare Rating[3]	Glare Rating Per Design	Pass	Fail
S1	S1	2 MH from property line	No Limit	B1	Area Lighting	U0	U0	> 2 MH from property line	G2	G2	☐	☐
S2	S2	2 MH from property line	No Limit	B1	Area Lighting	U0	U3	> 2 MH from property line	G2	G1	☐	☐
S1	S1	2 MH from property line	No Limit	B1	Area Lighting	U0	U0	> 2 MH from property line	G2	G2	☐	☐

[1] *FOOTNOTES: Mounting Height is labeled MH in this table.*
[2] *Authority Having Jurisdiction may ask for Luminaire cut sheets or other documentation to confirm luminaire type, uplight ratings and glare ratings used for compliance per 130.2(b)/ 160.5(c)*
[3] *BUG ratings with a lower number than the 'Max Allowable' are compliant. Ex. If Max Allowable is Bug Rating B4, then B0, B1, B2 and B3 are all compliant.*

STATE OF CALIFORNIA
Outdoor Lighting
CALIFORNIA ENERGY COMMISSION

CERTIFICATE OF COMPLIANCE	NRCC-LTO-E
Project Name:	Report Page: (Page 6 of 11)
	Date Prepared: 11/21/2024

H. OUTDOOR LIGHTING CONTROLS

This table demonstrates compliance with controls requirements for all new or altered luminaires installed as part of the permit application. For alteration projects, luminaires which are existing to remain (ie untouched) and luminaires which are removed and reinstalled (wiring only) do not need to be included in this table even if they are within the spaces covered by the permit application.
Outdoor lighting for nonresidential buildings, parking garages and common service areas in multifamily buildings must be documented separately from outdoor lighting attached to multifamily buildings and controlled from the inside of a dwelling unit

Mandatory Controls for Nonresidential Occupancies, Parking Garages & Common Areas in Multifamily Buildings

01	02	03	04	05	
Area Description	Shut-Off 130.2(c)1 / 160.5(c)	Auto-Schedule 130.2(c)2 / 160.5(c)	Motion Sensor 130.2(c)3 / 160.5(c)	Field Inspector	
				Pass	Fail
General Hardscape	Astronomical Timer	Provided	Provided	☐	☐
Canopy	Astronomical Timer	Provided	NA: Each Luminaire <= 40 Watts	☐	☐
Building Facade	Astronomical Timer	Provided	NA: Each Luminaire <= 40 Watts	☐	☐
Automotive Hardscape	Astronomical Timer	Provided	Provided	☐	☐
Entrances	Astronomical Timer	Provided	NA: Each Luminaire <= 40 Watts	☐	☐

[1] *FOOTNOTE: Text has been abbreviated, please refer to Table 160.5-A to confirm compliance with the specific light source technologies listed.*
[2] *Authority having jurisdiction may ask for cutsheets or other documentation to confirm compliance of light source.*
[3] *Recessed luminaires marked for use in fire-rated installations, and recessed luminaires installed in non-insulated ceilings are excepted from ii and iii.*

STATE OF CALIFORNIA
Outdoor Lighting
CALIFORNIA ENERGY COMMISSION

CERTIFICATE OF COMPLIANCE	NRCC-LTO-E
Project Name:	Report Page: (Page 7 of 11)
	Date Prepared: 11/21/2024

I. LIGHTING POWER ALLOWANCE (per 140.7 / 170.2(e))

This table includes areas using allowance calculations per 140.7 / 170.2(e). General Hardscape Allowance is per Table 140.7-A/Table 170.2-R while "Use it or lose it" Allowances are per Table 140.7-B /Table 170.2-S. Indicate which allowances are being used to expand sections for user input. Luminaires that qualify for one of the "Use it or lose it" allowances shall not qualify for another "Use it or lose it" allowance.
Outdoor lighting attached to multifamily buildings and controlled from the inside of a dwelling unit are included in Table H. and are not included here. All other multifamily outdoor lighting is included here.

	01				
		"Use it or lose it" Allowance (select all that apply) (select all that apply)			
☒ General Hardscape Allowance Table I (below)	☒ Per Application Table J	☐ Sales Frontage Table K	☐ Ornamental Table L	☒ Per Specific Area Table M	

Calculated General Hardscape Lighting Power Allowance per Table 140.7-A for Nonresidential & Hotel/Motel

02	03	04	05	06	07	08	09
Area Description	Area Wattage Allowance (AWA)			Linear Wattage Allowance (LWA)			Total General AWA + LWA (Watts)
	Illuminated Area (ft²)	Allowed Density (W/ft²)	Area Allowance (Watts)	Perimeter Length (lf)	Allowed Density (W/lf)	Linear Allowance (Watts)	
General Hardscape	45968	0.019	873.4	3333	0.2	500	1373
Automative Hardscape	12000	0.019	228	483	0.2	72.4	300
						Initial Wattage Allowance for Entire Site (Watts):	200
						Instances of Initial Wattage Allowance (LZ 0 only)[1]	
						Total General Hardscape Allowance (Watts):	1874

STATE OF CALIFORNIA
Outdoor Lighting
CALIFORNIA ENERGY COMMISSION

CERTIFICATE OF COMPLIANCE	NRCC-LTO-E
Project Name:	Report Page: (Page 8 of 11)
	Date Prepared: 11/21/2024

J. LIGHTING ALLOWANCE: PER APPLICATION

This table includes areas using the wattage allowance per application from Table 140.7-B / Table 170.2-S.

01	02	03	04	05	06	07	08	09	10
Area Description	Application per Table 140.7-B[1]	CALCULATED ALLOWANCE (Watts)			DESIGN WATTS				Additional Allowance (Watts)
		# of Locations	Allowance per Location[2]	Extra Allowance (Watts)	Luminaire Name or Item Tag	Watts per Luminaire	# of Luminaires	Design Watts	
Entrances	Building Entrance/Exit	8	15	120	W1	10	5	50	50
						Total Design Watts for this Area:		50	
							Total Allowance (Watts) All Areas:		50

[1] *FOOTNOTES: Primary entrance applications are only available for senior care facilities, healthcare facilities, police stations, hospitals, fire stations, and emergency vehicle facilities.*
[2] *The Allowance per Location for ATMs is 100W for the first ATM and 35W for each additional per Table 140.7-B /Table 170.2-S.*
[3] *For luminaires indicated in Table F as linear, wattage in column 07 is W/lf instead of Watts/luminaire. Total linear feet should be indicated in column 08 instead of number of luminaires.*

K. LIGHTING ALLOWANCE: SALES FRONTAGE

This section does not apply to this project.

L. LIGHTING ALLOWANCE: ORNAMENTAL

This section does not apply to this project.

STATE OF CALIFORNIA
Outdoor Lighting
CALIFORNIA ENERGY COMMISSION

CERTIFICATE OF COMPLIANCE	NRCC-LTO-E
Project Name:	Report Page: (Page 9 of 11)
	Date Prepared: 11/21/2024

M. LIGHTING ALLOWANCE: PER SPECIFIC AREA

This table includes areas using the wattage allowance per specific area from Table 140.7-B /Table 170.2-S. More than one specific area allowance may be taken in a single project, if applicable. However, multiple specific area allowances may not be taken for the exact same area on the site.

01	02	03	04	05	06	07	08	09	10
Area Description	Specific Area Type per Table 140.7-B	CALCULATED ALLOWANCE (Watts)			DESIGN WATTS				Additional Allowance (Watts)
		Specific Area (ft²)[1]	Allowed Density (W/ft²)	Extra Allowance (Watts)	Luminaire Name or Item Tag	Watts per Luminaire	# of Luminaires	Design Watts	
Canopy	NonSalesCanopy	11803	0.1	1617	B3	24.7	28	691.6	873.6
					W4	19	2	38	
					D2	24	6	144	
							Total Design Watts for this Area:	873.6	
Building Facade	BuildingFacade	17160	0.1	1716	U1	12	42	504	504
							Total Design Watts for this Area:	504	
								Total Allowance (Watts) All Areas:	1377.6

[1] *FOOTNOTES: See Table 140.7-B /Table 170.2-S for rules for calculating the specific areas (ft² for these additional lighting allowances.*
[2] *For luminaires indicated in Table F as linear, wattage in column 07 is W/lf instead of Watts/luminaire. Total linear feet should be indicated in column 08 instead of number of luminaires.*

N. EXISTING CONDITIONS POWER ALLOWANCE (alterations only)

This section does not apply to this project.

STATE OF CALIFORNIA
Outdoor Lighting
CALIFORNIA ENERGY COMMISSION

CERTIFICATE OF COMPLIANCE	NRCC-LTO-E
Project Name:	Report Page: (Page 10 of 11)
	Date Prepared: 11/21/2024

O. DECLARATION OF REQUIRED CERTIFICATES OF INSTALLATION

Selections have been made based on information provided in this document. If any selection has been changed by permit applicant, an explanation should be included in Table E. Additional Remarks. These documents must be provided to the building inspector during construction and can be found online

Form/Title
NRCI-LTO-E - Must be submitted for all buildings

P. DECLARATION OF REQUIRED CERTIFICATES OF ACCEPTANCE

Selections have been made based on information provided in this document. If any selection has been changed by permit applicant, an explanation should be included in Table E. Additional Remarks. These documents must be provided to the building inspector during construction and must be completed through an Acceptance Test Technician Certification Provider (ATTCP). For more information visit: http://www.energy.ca.gov/title24/attcp/providers.html

Form/Title	Systems/Spaces To Be Field Verified
NRCA-LTO-02-A - Must be submitted for all outdoor lighting controls except for alterations where controls are added to <= 20 luminaires.	General Hardscape; Canopy; Building Facade; Automotive Hardscape; Entrances;

STATE OF CALIFORNIA
Outdoor Lighting
CALIFORNIA ENERGY COMMISSION

CERTIFICATE OF COMPLIANCE	NRCC-LTO-E
Project Name:	Report Page: (Page 11 of 11)
Project Address:	Date Prepared: 11/21/2024

DOCUMENTATION AUTHOR'S DECLARATION STATEMENT

I certify that this Certificate of Compliance documentation is accurate and complete.

Documentation Author Name:	Documentation Author Signature:
Bryan Glass	
Company: Teter Architects & Engineers	Signature Date: 2024-11-22
Address: 7535 N. Palm Ave. Ste. 201	CEA/ HERS Certification Identification (if applicable):
City/State/Zip: Fresno, CA. 93711	Phone: 559-437-0887

RESPONSIBLE PERSON'S DECLARATION STATEMENT

I certify the following under penalty of perjury, under the laws of the State of California:

1. The information provided on this Certificate of Compliance is true and correct.
2. I am eligible under Division 3 of the Business and Professions Code to accept responsibility for the building design or system design identified on this Certificate of Compliance (responsible designer)
3. The energy features and performance specifications, materials, components, and manufactured devices for the building design or system design identified on this Certificate of Compliance conform to the requirements of Title 24, Part 1 and Part 6 of the California Code of Regulations.
4. The building design features or system design features identified on this Certificate of Compliance are consistent with the information provided on other applicable compliance documents, worksheets, calculations, plans and specifications submitted to the enforcement agency for approval with this building permit application.
5. I will ensure that a completed signed copy of this Certificate of Compliance shall be made available with the building permit(s) issued for the building, and made available to the enforcement agency for all applicable inspections. I understand that a completed signed copy of this Certificate of Compliance is required to be included with the documentation the builder provides to the building owner at occupancy.

Responsible Designer Name:	Responsible Designer Signature:
Bryan Glass	
Company: Teter Architects & Engineers	Date Signed: 2024-11-22
Address: 7535 N. Palm Ave Ste. 201	License: E-17773
City/State/Zip: Fresno CA 93711	Phone: 559-437-0887

IDENTIFICATION STAMP
DIV. OF THE STATE ARCHITECT
APP: 02-122821 INC: 2
REVIEWED FOR
SS ☑ FLS ☑ ACS ☑
DATE: 11/20/2025

Teter, Inc. expressly reserves its common law copyright and other property rights in these plans. This document, the ideas and designs incorporated herein, as an instrument of professional service, is not to be used in whole or in part, for any other project without prior written authorization.

MARK	DATE	DESCRIPTION
A.	11/13/2025	DSA BACKCHECK

08/21/2025

TETER, INC.
FRESNO HEADQUARTERS
VISALIA | BAKERSFIELD | MODESTO | SAN LUIS OBISPO
ARCHITECTS ENGINEERS CONNECTED

VISALIA CAMPUS UNIVERSITY CENTER
COLLEGE OF THE SEQUOIAS
915 S. MOONEY BLVD
VISALIA, CA

DRAWING TITLE
ENERGY COMPLIANCE DOCUMENTS

PROJECT NO.
22-12498

DRAWING
E903.2

PLOT DATE: 9/4/2025 3:59:00 PM

C:\Users\sdonn\Box\Cordiner Consulting LLC\Projects 2023\23-023 - TET - New University Center Building\6_Submittals_Design\12498-FP-CCS University Center 2024 DSA Backcheck.rvt

FIRE PROTECTION SHEET INDEX

SHEET NUMBER	SHEET NAME
FP000.2	GENERAL INFORMATION
FP100.2	SITE PLAN
FP210.2	FIRST FLOOR PIPING PLAN WEST
FP211.2	FIRST FLOOR PIPING PLAN EAST
FP212.2	FIRST FLOOR PIPING PLAN LECTURE HALL CEILINGS
FP220.2	SECOND FLOOR PIPING PLAN WEST
FP221.2	SECOND FLOOR PIPING PLAN EAST
FP300.2	ELEVATIONS
FP400.2	SECTIONS
FP401.2	SECTIONS
FP402.2	SECTIONS
FP610.2	FIRST FLOOR REFLECTED CEILING PLAN WEST
FP611.2	FIRST FLOOR REFLECTED CEILING PLAN EAST
FP620.2	SECOND FLOOR REFLECTED CEILING PLAN WEST
FP621.2	SECOND FLOOR REFLECTED CEILING PLAN EAST
FP800.2	DETAILS

FIRST FLOOR SPRINKLER SCHEDULE

Sprinkler Symbol	Qty.	Manufacturer	Model	Orifice Size	K-Factor	Temperature Rating	Sprinkler Orientation	Finish
○	43	VIKING CORP	VK300	1/2"	5.6	200°F	Upright	
◉	3	VIKING CORP	VK302	1/2"	5.6	155°F	Pendent	
◁	2	VIKING CORP	VK305	1/2"	5.6	200°F	Sidewall	
●	201	VIKING CORP	VK462	1/2"	5.6	200°F	Pendent	

SECOND FLOOR SPRINKLER SCHEDULE

Sprinkler Symbol	Qty.	Manufacturer	Model	Orifice Size	K-Factor	Temperature Rating	Sprinkler Orientation	Finish
◎D	2	VIKING CORP	VK180	1/2"	5.6	155°F	Dry Pendent	
○	8	VIKING CORP	VK300	1/2"	5.6	200°F	Upright	
◁	8	VIKING CORP	VK305	1/2"	5.6	200°F	Sidewall	
●	191	VIKING CORP	VK462	1/2"	5.6	200°F	Pendent	
●	27	VIKING CORP	VK634	3/4"	8	200°F	Pendent	

PIPING SYSTEM SCHEDULE

PRODUCT	MANUFACTURER	SCHEDULE	MATERIAL TYPE
MAINS	WHEATLAND OR EQUAL	SCH 10	STEEL
BRANCHLINES > 1"	WHEATLAND OR EQUAL	SCH 10	STEEL
BRANCHLINES 1" & LESS	WHEATLAND OR EQUAL	SCH 40	STEEL
GROOVED FITTINGS	VICTAULIC OR EQUAL	175 PSI	DUCTILE IRON
THREADED FITTINGS	ANVIL OR EQUAL	175 PSI	DUCTILE IRON

FIRE PROTECTION ABBREVIATIONS

A.D.	ACCESS DOOR
A.F.F.	ABOVE FINISHED FLOOR
ALP.	ALARM PANEL
A.P.	ACCESS PANEL
B.F.F.	BELOW FINISHED FLOOR
C.P.	CONTROL PANEL
DCDA	DOUBLE CHECK DETECTOR ASSEMBLY
ELEV	ELEVATION
FD	FLOOR DRAIN
FDC	FIRE DEPARTMENT CONNECTION
FHC	FIRE HOSE VALVE CONNECTION (2-1/2")
FHV	FIRE HOSE VALVE
FLR	FLOOR
FS	FLOW SWITCH NORMALLY CLOSED N.C.
N.I.C	NOT TO SCALE
N.T.S.	NOT IN CONTRACT
OS&Y	OUTSIDE STEM AND YOKE GATE VALVE
PSIG	POUNDS PER SQUARE INCH GAUGE
TS	TAMPER SWITCH
TYP.	TYPICAL THROUGHOUT
PIV	POST INDICATOR VALVE

HYDRAULIC CALCULATION CRITERIA

1. ALL SPRINKLER SYSTEMS THROUGHOUT THE BUILDING SHALL BE HYDRAULICALLY CALCULATED BASED ON COORDINATED SHOP DRAWINGS.
2. SPRINKLER SYSTEM LAYOUT AND CALCULATIONS SHALL COMPLY WITH THE CALIFORNIA BUILDING CODE, NFPA 13, OWNER'S INSURANCE COMPANY REQUIREMENTS AND GOOD ENGINEERING PRACTICE.
3. OCCUPANCY CLASSIFICATION:
   A. LIGHT HAZARD OCCUPANCY: CLASSROOMS, CORRIDORS, COMMON AREAS.
   B. ORDINARY HAZARD GROUP-1 OCCUPANCY: STORAGE, MECHANICAL, ELECTRICAL ROOMS
   C. ORDINARY HAZARD GROUP-2 OCCUPANCY: LABS, VOCATIONAL SHOPS.
   D. EXTRA HAZARD GROUP-2 AUTOMOTIVE TECHNOLOGY LAB, FUEL STORAGE, CHEMICAL STORAGE, INDUSTRIAL MAINTENANCE LAB
4. SPRINKLERS PROTECTING LIGHT HAZARD OCCUPANCY SHALL PROVIDE A MINIMUM DENSITY DISCHARGE OF .10 GPM/SQ.FT. OVER MOST HYDRAULICALLY REMOTE 1,500 SQ.FT., MAXIMUM COVERAGE PER SPRINKLER HEAD- 225 SQ.FT.
5. SPRINKLERS PROTECTING ORDINARY HAZARD GROUP-1 OCCUPANCY SHALL PROVIDE A MINIMUM DENSITY DISCHARGE OF .15 GPM/SQ.FT. OVER MOST HYDRAULICALLY REMOTE 1,500 SQ.FT., MAXIMUM COVERAGE PER SPRINKLER HEAD- 130 SQ.FT.
6. SPRINKLERS PROTECTING ORDINARY HAZARD GROUP-2 OCCUPANCY SHALL PROVIDE A MINIMUM DENSITY DISCHARGE OF .20 GPM/SQ.FT. OVER MOST HYDRAULICALLY REMOTE 1,500 SQ.FT., MAXIMUM COVERAGE PER SPRINKLER HEAD- 130 SQ.FT.
7. MINIMUM PRESSURE AT ANY SPRINKLER HEAD SHALL BE AS REQUIRED BY HYDRAULIC CALCULATIONS BUT IN NO CASE LESS THEN 7-PSI.

EDUCATIONAL OCCUPANCY DESIGN CRITERIA

- LIGHT HAZARD OCCUPANCY (CLASSROOMS, OFFICES, *AUDITORIUMS, COMMON CORRIDORS, LIBRARY READING AREAS WITHOUT HIGH STACKS)- DENSITY .10 GPM PER SQUARE FOOT OVER THE MOST HYDRAULICALLY REMOTE 1500 SQUARE FEET MAXIMUM COVERAGE PER SPRINKLER HEAD 225 SQUARE FEET.
- ORDINARY HAZARD GP-1 OCCUPANCY (KITCHENS, MULTI-PURPOSE ROOMS, LARGE STORAGE AREAS, STAGES [AS DEFINED IN 2022 CBC 410.3])- DENSITY .15 GPM PER SQUARE FOOT OVER THE MOST HYDRAULICALLY REMOTE 1500 SQUARE FEET MAXIMUM COVERAGE PER SPRINKLER HEAD 130 SQUARE FEET.
- ORDINARY HAZARD GP-2 OCCUPANCY (SCIENCE LABS, VOCATIONAL SHOPS, STAGES 1,000SQFT IN AREA OR >50'-0 IN HEIGHT, LIBRARY READING AREAS WITH HIGH STACKS)- DENSITY .20 GPM PER SQUARE FOOT OVER THE MOST HYDRAULICALLY REMOTE 1500 SQUARE FEET MAXIMUM COVERAGE PER SPRINKLER HEAD 130 SQUARE FEET.
- NFPA 13, A.5.1, A.5.3.1, A.5.3.2 *IF ALSO FUNCTIONS AS MULTI-PURPOSE ROOM, USE ORDINARY HAZARD GROUP 1
- MINIMUM PRESSURE AT SPRINKLER HEAD 7 PSI.
- DISCHARGE FROM EACH SPRINKLER HEAD SHALL NOT BE LESS THAN THAT REQUIRED IN NFPA 13 2019 EDITION.

GENERAL NOTES

1. IT IS THE INTENT OF THESE DRAWINGS AND SPECIFICATIONS FOR THE CONTRACTOR TO FURNISH AND INSTALL A COMPLETE NEW WET FIRE SPRINKLER PROTECTION SYSTEM FOR THE BUILDING IN FULL COMPLIANCE WITH THE STATE OF CALIFORNIA AND BUILDING CODES INCLUDING: VALVES, RISERS, AND ALARMS AS REQUIRED. THIS CONTRACTOR SHALL BE RESPONSIBLE FOR THE FULL INSTALLATION ASPECT OF THE FIRE PROTECTION SYSTEM IN ACCORDANCE WITH APPLICABLE CODES.

2. THE ENTIRE INSTALLATION SHALL BE IN ACCORDANCE WITH THE LATEST RULES AND REGULATIONS OF THE AUTHORITIES HAVING JURISDICTION INCLUDING BUT NOT LIMITED TO, STATE BUILDING AND FIRE CODES AND ALL APPENDICES, THE NATIONAL FIRE PROTECTION ASSOCIATION STANDARD NO. 13, 14 & 20 AS ADOPTED BY THE STATE OF CALIFORNIA, AND THE OWNER'S INSURANCE UNDERWRITERS.

3. IF THERE ARE ANY QUESTIONS CONCERNING WHAT THE INSURANCE UNDERWRITER WILL REQUIRE IN ORDER TO APPROVE THE COMPLETED INSTALLATION (PIPING SIZING, LOCATION OF RISERS, TEST STATIONS, HYDRANTS, ALARMS, ETC.) THE BIDDER SHALL CONSULT WITH THE INSURANCE UNDERWRITER BEFORE SUBMITTING HIS BID. FAILURE TO CONSULT WITH THE INSURANCE UNDERWRITER DOES NOT RELIEVE THIS CONTRACTOR FROM HIS RESPONSIBILITY BY THE COMPLETION OF ANY AND ALL WORK REQUIRED WITH NO EXTRA CHARGES TO THE OWNER.

4. FURNISH ALL MATERIALS, LABOR, TOOLS, EQUIPMENT AND SUPERVISION REQUIRED FOR THE INSTALLATION OF COMPLETE SYSTEMS AND ALL NECESSARY PIPING, SPRINKLER HEADS, TEST CONNECTIONS, VALVES, DRAINS AND SPRINKLER ALARMS, FLOW SWITCHES, HORNS OR GONGS, DETECTOR CHECK VALVES, SIAMESE FIRE DEPARTMENT CONNECTIONS, PRESSURE GAUGES, AND OTHER REQUIRED COMPONENTS.

5. ALL MATERIALS EXPOSED WITHIN PLENUMS SHALL BE NONCOMBUSTIBLE OR SHALL HAVE A FLAME SPREAD INDEX OF NOT MORE THAN 25 AND A SMOKE DEVELOPED INDEX OF NOT MORE THAN 50 WHEN TESTED IN ACCORDANCE WITH ASTM E 84. CONTRACTOR SHALL PROVIDE PROOF OF COMPLIANCE WITH THIS REQUIREMENT UPON REQUEST.

6. ALL SPRINKLER PIPING SHALL BE CONCEALED IN ALL FINISHED AREAS, AVOIDING INTERFERENCE WITH LIGHTS, DUCTS, PIPES, ETC. BALANCE MAY BE RUN EXPOSED. ANY CONFLICTS DURING INSTALLATION SHALL BE BROUGHT TO THE ATTENTION OF THE DESIGN ENGINEER.

7. SPRINKLER HEADS SHALL NOT INTERFERE WITH LIGHTING FIXTURES, SPEAKERS, AIR CONDITIONING DIFFUSERS AND GRILLES, ETC. COORDINATE WITH ARCHITECT'S REFLECTED CEILING PRIOR TO SUBMITTING SHOP DRAWING.

8. EXACT LOCATION OF SPRINKLER HEADS AND PIPING SHALL BE COORDINATED WITH OTHER TRADES AND THE ARCHITECT'S REFLECTED CEILING PLAN BEFORE INSTALLATION.

9. CUTTING AND NOTCHING OF JOISTS IS NOT ACCEPTABLE AND WILL NOT BE PERMITTED. ANY DAMAGE CAUSED TO THE BUILDING STRUCTURE DURING INSTALLATION SHALL BE REPAIRED AT THIS CONTRACTORS EXPENSE.

10. ALL ELECTRICAL REQUIREMENTS FOR FIRE PROTECTION AND SPRINKLER SYSTEM ARE TO BE INCLUDED AS PART OF THIS CONTRACTOR'S RESPONSIBILITY. THIS CONTRACTOR SHALL SUB-CONTRACT FOR ALL WIRING AND RELATED COMPONENT REQUIREMENTS WITH SEPARATE ELECTRICAL CONTRACTOR. ALARM WIRING REQUIREMENTS FOR THE FIRE PROTECTION AND ALARM SYSTEM ARE TO BE INCLUDED IN THIS WORK.

11. WHEN COMPLETED, THE ENTIRE SPRINKLER SYSTEM SHALL BE TESTED IN ACCORDANCE WITH CHAPTER 25 OF NFPA 13 AND AS REQUIRED BY THE RULES AND REGULATIONS OF THE AUTHORITIES HAVING JURISDICTION. ALL SYSTEMS MUST BE FREE OF LEAKS AND ANY OTHER DEFECTS.

12. ALL EQUIPMENT AND WORKMANSHIP SHALL BE GUARANTEED FOR A PERIOD OF ONE(1) YEAR AFTER ACCEPTANCE BY THE OWNER AND ARCHITECT, AGAINST DEFECTIVE MATERIALS AND LABOR AND IMPROPER DESIGN.

13. CONTRACTOR SHALL MAKE AN ALLOWANCE FOR A MINIMUM OF 5% ADDITIONAL SPRINKLER HEADS TO BE INSTALLED AS TO PROVIDE ADEQUATE COVERAGE DUE TO ANY OBSTRUCTIONS, DUCTWORK, PIPING, ETC. INSTALLED DURING CONSTRUCTION WHICH MAY ALTER THE ORIGINAL SPRINKLER DESIGN.

14. FURNISH SPRINKLER CABINETS OF FINISHED STEEL AND HINGED COVER SIMILAR TO POTTER-ROEMER FIG. 6162 WITH SPACE FOR A MINIMUM OF 6 SPARE SPRINKLER HEADS PLUS SPRINKLER WRENCH FOR EACH TYPE, SUITABLE FOR WALL MOUNTING. FURNISH SIX (6) EXTRA SPRINKLER HEADS, WITH A MINIMUM OF (2) OF EACH TYPE. THIS SHALL ALSO INCLUDE ESCUTCHEONS.

15. INSTALL SPRINKLER PIPING TO PROVIDE FOR SYSTEM DRAINAGE IN ACCORDANCE WITH NFPA 13.

16. INSTALL SPRINKLER PIPING ACCORDING TO NFPA 13 VIBRATION ISOLATION AND SEISMIC RESTRAINTS.

17. CONTRACTOR TO PAY FOR AND SUPPLY ALL DUMPSTERS FOR DEBRIS REMOVAL, COORDINATE AND OBTAIN APPROVAL FOR DUMPSTER LOCATIONS ON SITE AND DEBRIS REMOVAL ROUTES WITH THE CONSTRUCTION MANAGER.

18. INSTALL NON-COMBUSTIBLE HOODS OR SHIELDS ABOVE IMPORTANT ELECTRICAL EQUIPMENT FOR PROTECTION FROM SPRINKLER DISCHARGE PER NFPA 13, 8.14.10.2.

19. WHERE WORK BETWEEN THESE DRAWINGS AND ARCHITECTURAL PLANS ARE IN CONFLICT, ADVISE ARCHITECT AND ENGINEER PRIOR TO INSTALLATION OF SPRINKLER WORK.

20. ALL SPRINKLER DRAINS SHALL RUN TO SAFE LOCATIONS TO PREVENT OVERFLOW OF DRAINS. PROVIDE SPLASH BLOCK AS REQUIRED.

21. PORTABLE FIRE EXTINGUISHERS, IF REQUIRED (OF REQUIRED CLASS AND CAPACITY) ARE NOT PART OF THE SPRINKLER SCOPE OF WORK.

22. ALL PIPING SYSTEMS SHOWN ON THESE DRAWINGS ARE DIAGRAMMATIC AND EVERY ATTEMPT HAS BEEN MADE TO INDICATE OFFSETS AND PIPING ARRANGEMENTS TO SUIT ACTUAL INSTALLATION REQUIREMENTS. HOWEVER, SPRINKLER CONTRACTOR SHALL COORDINATE WITH THE G.C. AND ALL OTHER TRADES WHEN LAYING OUT HIS WORK TO ENSURE CONFLICT AVOIDANCE.

23. AS THE ACTUAL LIFE SPAN OF THE SPRINKLER SYSTEM IS DEPENDENT ON MANY VARIABLES, INCLUDING BUT NOT LIMITED TO WATER QUALITY AND ATMOSPHERIC CONDITIONS, THE ENGINEER ASSUMES NO LIABILITY OR RESPONSIBILITY OF THE LIFE SPAN OF THE SPRINKLER SYSTEM DUE TO MICRO-BIOLOGICALLY INFLUENCED CORROSION (MIC). THE SPRINKLER CONTRACTOR AND/OR THE GENERAL CONTRACTOR SHALL HAVE THE SPRINKLER SYSTEM TESTED AND TREATED (IF NECESSARY) FOR PROTECTION AGAINST MICRO-BIOLOGICALLY INFLUENCED CORROSION (MIC).

24. INSTALLATION OF THE SPRINKLER SYSTEM SHALL NOT BE STARTED UNTIL DRAWINGS, SPECIFICATIONS, CALCULATIONS, ETC. HAVE BEEN APPROVED BY DSA.

25. THE INSTALLATING CONTRACTOR SHALL SUBMIT THEIR OWN SHOP DRAWINGS, CALCULATIONS, AND TECHINCAL SUBMITALS FOR REVIEW PRIOR TO INSTALLATION.

26. ANY CONFLICTS FOUND BY THE INSTALLING CONTRACT SHALL BE BROUGHT TO THE ATTENTION OF THE ENGINEER AND ARCHITECT IMMEDIATELY AND PRIOR TO ANY INSTALLATION AND/OR FABRICATION.

27. IN AREAS WITH MECHANICAL PLATFORMS AND/OR CLOUD CEILINGS, THE OVERHEAD IS PROTECTED BY UPRIGHTS WHILE DROPPING DOWN WITH PENDENTS TO PROTECT BELOW THE PLATFORM/CLOUD.

28. ALL UNDERGROUND PIPING SHALL BE C900 OR EQUIVALENT.

29. DUE TO HYDRAULIC LIMITATIONS FLEXIBLE SPRINKLER DROPS WILL NOT BE PERMITTED ON THIS INSTALLATION.

30. EXPOSED PIPING ON LEVEL 1 BELOW THE GRATED FLOOR ABOVE SHALL BE STAINLESS STEEL FINISHED FOR AESTHETIC PURPOSES.

31. EXPOSED PIPING IN SKYLIGHTS AND OPEN CEILING AREAS SHALL BE PAINTED TO MATCH THE CEILINGS EXACT COLOR. SPRINKLERS SHALL NOT BE PAINTED PER NFPA 13.

32. REFER TO NOTES ON EACH SHEET FOR COLOR REQUIRMENTS FOR FACTORY FINISHED COVER PLATES IN MULTIPLE AREAS.

IDENTIFICATION STAMP
DIV. OF THE STATE ARCHITECT
APP: 02-122821 INC: 2
REVIEWED FOR
SS ☑ FLS ☑ ACS ☑
DATE: 11/20/2025

Teter, Inc. expressly reserves its common law copyright and other property rights in these plans. This document, the ideas and designs incorporated herein, as an instrument of professional service, is not to be used in whole or in part, for any other project without prior written authorization.

MARK	DATE	DESCRIPTION
A	11/13/2025	DSA BACKCHECK

TETER, LLP
FRESNO HEADQUARTERS
VISALIA | BAKERSFIELD | MODESTO | SAN LUIS OBISPO
ARCHITECTS ENGINEERS CONNECTED

VISALIA CAMPUS UNIVERSITY CENTER
COLLEGE OF THE SEQUOIAS
4999 E. BARDSLEY AVE.
TULARE, CA

DRAWING TITLE
GENERAL INFORMATION

PROJECT NO.
22-12498

DRAWING
FP000.2

PLOT DATE: 9/12/2025 11:08:16 AM

C:\Users\sdonn\Box\Cordiner Consulting LLC\Projects 2023\23-023 - TET - New University Center Building\6_Submittals\1_Design\12498-FP-CCS University Center 2024 DSA Backcheck.rvt

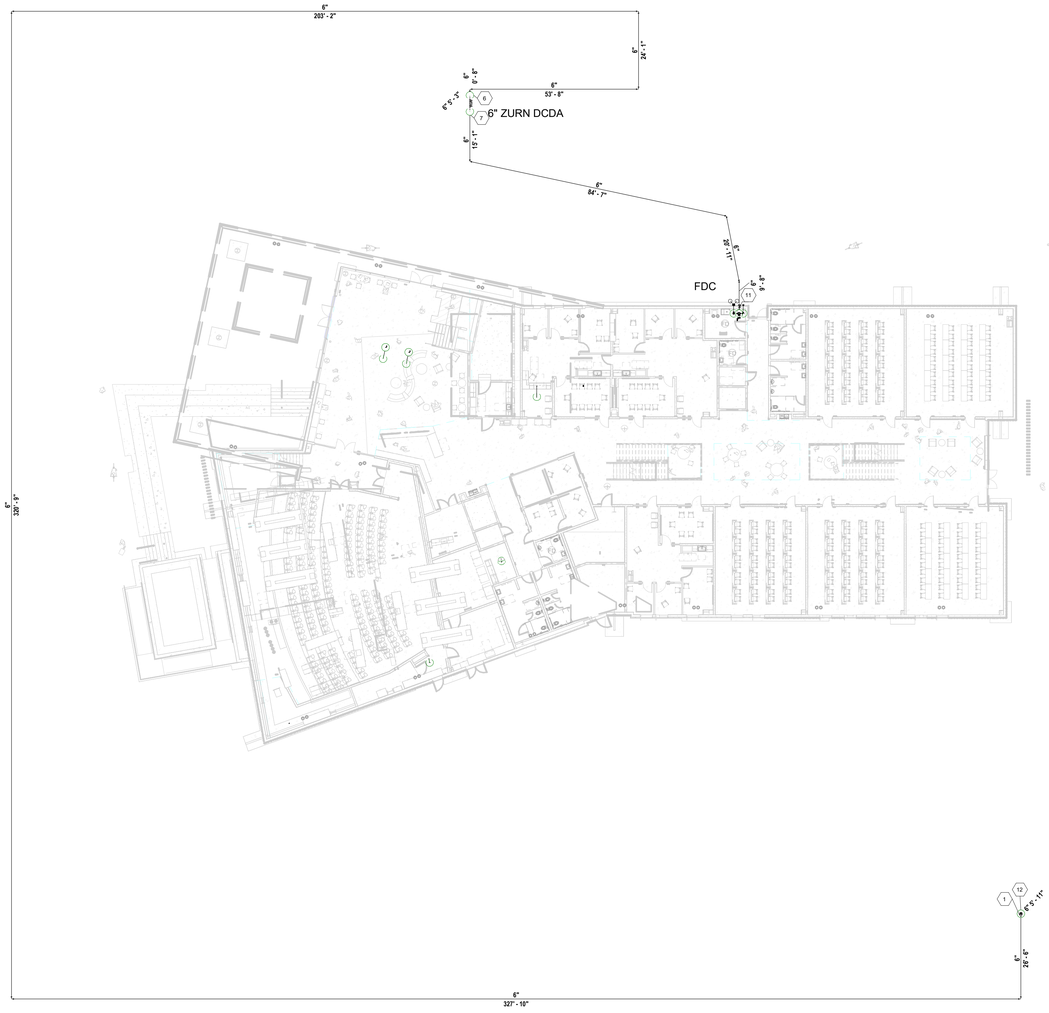

1 FIRE PROTECTION - SITE PLAN
1" = 20'-0"

California Water Service Company
Fire Flow Test
10/13/2025

Test Date: 10/13/2025 Time: 6:45
District: VISALIA Zone: Plat: 31-32
Address: S Mooney BLVD
Cross Street: W Tulare AVE
Requested By: Jon Coulter
Conducted By: Gilbert
Purpose Of Test: Determine Available Flow
Witnessed By: Calwater: Rene
Others:

Outlet No.	Outlet Size	PITOT	Observed	Static Pressure	Residual Pressure	Flow Observed	Flow Avail. @20
Location 1 Hydrant No.: Vis-168			Address: 2015 W Tulare Ave.				
1	2.50	14	628	77	67	2802	7173
2	4.50	16	2175				
3							
4							
Location 2 Hydrant No.: -			Address:				
1							
2							
3							
4							
Location 3 Hydrant No.: -			Address:				
1							
2							
3							
4							
			Total Flow Observed Available @20:			2802	7173

Remarks:

Static/Residual Location: Vis-298 W Tulare Ave. and S Mooney Blvd.

Note:
Regardless of the results of this test, California Water Service Company assumes no liability beyond that stated in the following excerpt from the P.U.C. Tariff Schedule: "The utility (California Water Service Company) will supply only such water at such pressure as may be available from time to time as a result of its normal operation of the system."

SITE PLAN NOTES

1. FIRE PROTECTION SERVICE AND ALL ITS APPURTENANCES ARE SHOWN FOR HYDRAULIC CALCULATION PURPOSES ONLY.
2. LOCATION OF LINES AND EQUIPMENT ARE FOR REFERENCE ONLY HOWEVER THE FIRE SERVICE LINE SHALL BE A MINIMUM OF 6" DIAMETER.
3. SITE CIVIL PLANS SHALL BE CONSULTED FOR ALL UNDERGROUND WORK. UNDERGROUND IS NOT IN THE FIRE PROTECTION SCOPE. FP SCOPE BEGINS 1-0" AFF IN THE RISER ROOM. COORDINATE WITH CIVIL FOR POINT OF CONNECTION INSIDE BUILDING. SEE CIVIL SHEET C601.2 FOR CONTINUATION.
4. ANY DISCREPANCY BETWEEN THIS SITE PLAN AND THOSE OF THE SITE CIVIL DESIGN SHALL DEFER TO THE SITE CIVIL PLAN IN ALL INSTANCES.
5. DISTANCES SHOWN REFLECT CUT LENGTH DISTANCES AND ACCOUNT FOR FITTING TAKEOUTS. ACTUAL LENGTHS FROM POINT TO POINT SHOULD BE TAKEN FROM CIVIL PLANS.
6. UNDERGROUND PIPING MATERIAL SHALL BE IN ACCORDANCE WITH CIVIL PLANS. DR14 C900 OR EQUAL HAS BEEN REFERENCED IN THESE CALCULATIONS BUT IS NOT PART OF THE FIRE PROTECTION SCOPE OF WORK.

WATERFLOW TEST INFORMATION	
STATIC	72psi
RESIDUAL	40psi
FLOW	3270gpm

PLOT DATE: 9/12/2025 11:08:31 AM

IDENTIFICATION STAMP
DIV. OF THE STATE ARCHITECT
APP: 02-122821 INC: 2
REVIEWED FOR
SS ☑ FLS ☑ ACS ☑
DATE: 11/20/2025

Teter, Inc. expressly reserves its statutory and common law copyright and other property rights in these plans. This document, the ideas and designs incorporated herein, as an instrument of professional service, is not to be used in whole or part, for any other project without prior written authorization.

MARK	DATE	DESCRIPTION
A.	11/13/2025	DSA BACKCHECK

TETER, LLP
ARCHITECTS ENGINEERS CONSULTANTS
FRESNO HEADQUARTERS
VISALIA | BAKERSFIELD | MODESTO | SAN LUIS OBISPO

VISALIA CAMPUS UNIVERSITY CENTER
COLLEGE OF THE SEQUOIAS
4999 E. BARDSLEY AVE.
TULARE, CA

DRAWING TITLE
SITE PLAN

PROJECT NO.
22-12498

DRAWING
FP100.2

C:\Users\sdonn\Box\Cordiner Consulting LLC\Projects 2023\23-023 - TET - New University Center Building\6_Submittals\1_Design\12498-FP-CCS University Center 2024 DSA Backcheck.rvt

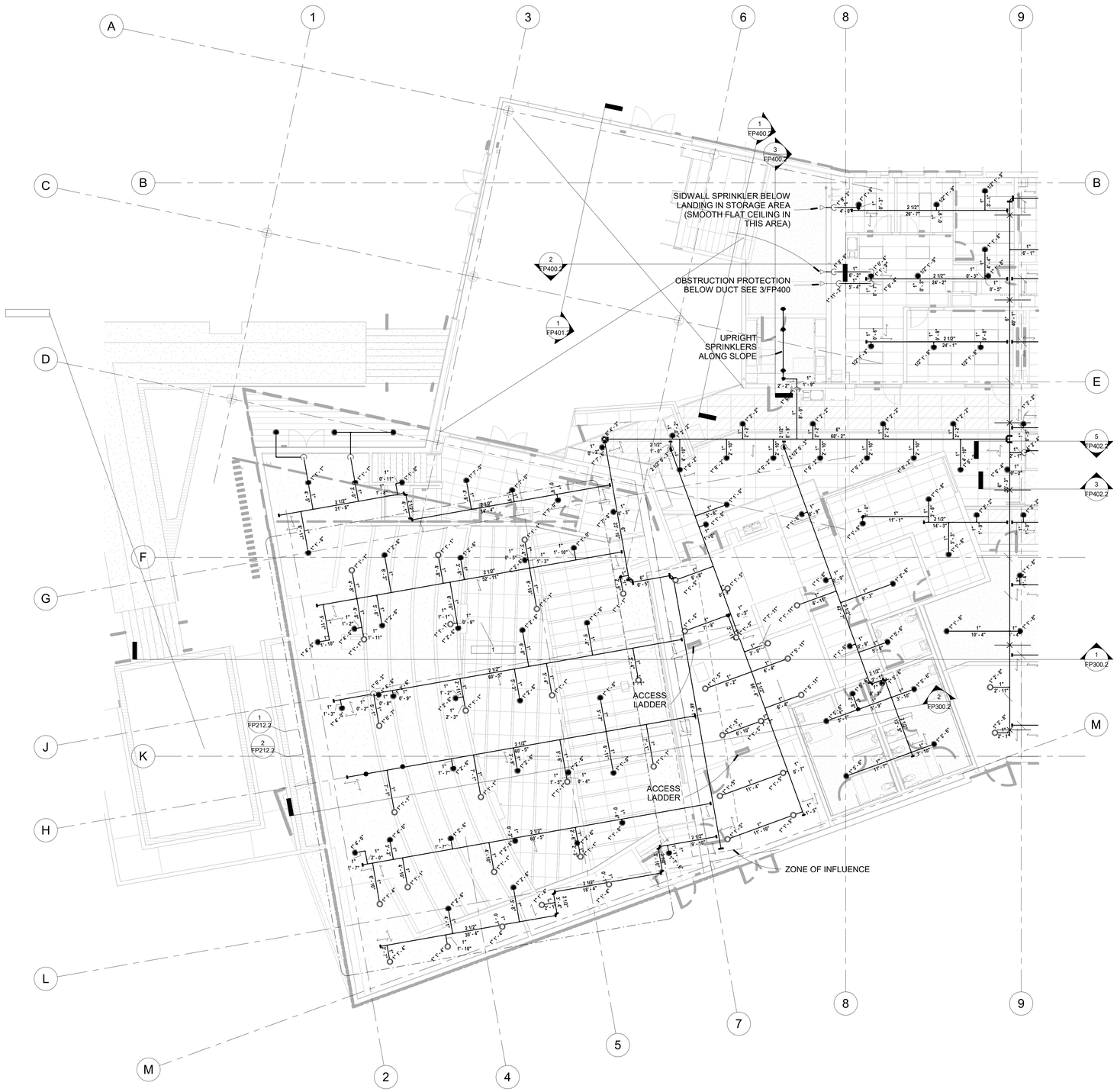

1 1ST FLOOR WEST
1/8" = 1'-0"

0' 4' 8' 16'

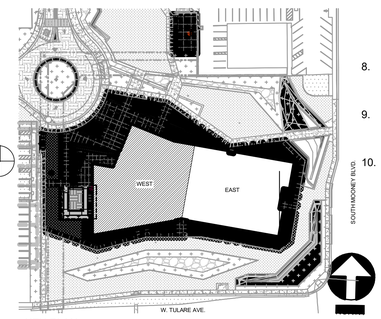

KEY PLAN

SYMBOLS LEGEND

- PIPE DIAMETER, CUT LENGTH, AND SECTION LENGTHS
- PIPE DIAMETER AND CUT LENGTH
- PIPE HANGER
- PIPE CHANGE IN ELEVATION
- LATERAL SWAY BRACE
- LONGITUDINAL SWAY BRACE
- 4-WAY SWAY BRACE
- TRAPEZE HANGER
- FLEX DROP
- HYDRAULIC NODE
- ALARM BELL
- PAV POTTER AIR VENT
- UPRIGHT SPRINKLER
- PENDENT SPRINKLER
- SIDEWALL SPRINKLER
- CONCEALED PENDENT SPRINKLER
- EXTENDED COVERAGE SPRINKLER
- DRY PENDENT SPRINKLER

KEYNOTES

1. ACOUSTICAL CLOUD CEILINGS TO HAVE CONCEALED PENDENTS INSTALLED IN CLOUD WITH UPRIGHTS INSTALLED ABOVE CLOUD CEILING. ALL CONCEALED PENDENTS TO BE INSTALLED ON 36" FLEX DROPS.
2. EXPOSED PIPING AND FITTINGS BELOW STAIRS AND UNDER STEEL GRATING SHALL BE STAINLESS STEEL. ALL PIPING NOT EXPOSED SHALL BE BLACK STEEL IN ACCORDANCE WITH THE GENERAL INFORMATION SHEET MATERIALS TABLE.
3. PIPING UNDER STAIRS SHALL BE SLOPED TO RUN BELOW STAIR TREADS BUT ABOVE STAIR CEILING FINISH. WHERE DOUBLE 90 "SWING JOINTS" MUST BE EXPOSED TO TRANSITION TO ANOTHER AREA, PIPING AND FITTINGS SHALL BE STAINLESS STEEL.

CONCEALED COVER PLATE NOTES

1. ACOUSTICAL CEILINGS WITH WHITE TILES SHALL HAVE WHITE CONCEALED COVER PLATES INSTALLED
2. ENTRY LOBBY CEILING WITH BRUSHED ALUMINUM FINISH SHALL HAVE BRUCHED CHROME FINISHED COVERPLATES
3. CORRIDOR CEILING WITH CUSTOM LIGHT GRAY COLORED FINISH TO HAVE CUSTOM COVER PLATE FROM VIKING SUPPLYNET TO MATCH. COLOR CODE TO BE PROVIDED
4. CORRIDOR WITH CUSTOM COLLEGE OF THE SEQUOIAS ORANGE TILES SHALL HAVE CUSTOM COVER PLATE FROM VIKING SUPPLYNET TO MATCH.
   RGB COLOR CODE
   BLUE= 0/84/164
   ORANGE 247/142/29
   GREEN 141/198/63

GENERAL DESIGN NOTES

1. ANY EXPOSED PIPING OR FITTINGS SUCH AS IN LECTURE HALL AND AT SKYLIGHT LOCATIONS SHALL BE PAINTED TO MATCH CEILING PAINT COLOR.
2. SKYLIGHT SPRINKLERS SHALL BE CHROME FINISHED
3. EXPOSED SPRINKLERS AT STAIRS AND UNDER STEEL GRATING SHALL BE CHROME FINISHED TO MATCH THE STAINLESS STEEL PIPING.
4. MECHANICAL SPACE PLAN EAST OF LECTURE HALL HAS A NON-COMBUSTIBLE CONCEALED SPACE ABOVE DECK. THIS AREA HAS BEEN OMMITTED FROM PROTECTION IN ACCORDACE WITH NFPA 13.
5. ALL SPRINKLERS IN LECTURE HALL CLOUD CEILINGS SHALL BE CENTERED BETWEEN CEILING TEES.
6. ALL ACT CEILIING CONCEALED SPRINKLERS SHALL BE CENTERED IN TILES.
7. UPRIGHT SPRINKLERS IN LECTURE HALL ARE ABOVE CLOUD CEILINGS AND SHOULD BE INSTALLED BASED ON SPACING SHOWN TO PROTECT ABOVE CLOUD CEILINGS AND BEYOND. PROTECTION BELOW CLOUD CEILINGS IS PROVIDED VIA THE CONCEALED PENDENT SPRINKLERS. REFER TO FIRE PROTECTION REFLECED CEILING PLAN SHEET FP610.2 FOR CONCEALED SPRINKLER LAYOUT COMPARED TO COULD CEILINGS.
8. SPRINKLERS HAVE BEEN OMITTED FROM ELEVATOR SHAFTS IN ACCORDANCE WITH NFPA 13 9.3.6.
9. SPRINKLERS HAVE BEEN OMITTED FROM EXTERIOR PROJECTIONS IN ACCORDANCE WITH NFPA 13 9.2.3.2
10. ALL CONCEALED SPACES HAVE BEEN OMITTED FROM PROTECTION IN ACCORDANCE WITH NFPA 13 AS THESE AREAS ARE OF NON-COMBUSTIBLE CONSTRUCTION AND NON-OCCUPIABLE.

IDENTIFICATION STAMP
DIV. OF THE STATE ARCHITECT
APP: 02-122821 INC: 2
REVIEWED FOR
SS ☑ FLS ☑ ACS ☑
DATE: 11/20/2025

Teter, Inc. expressly reserves its common law copyright and other property rights in these plans. This document, the ideas and designs incorporated herein, as an instrument of professional service, is not to be used in whole or part, for any other project without prior written authorization.

MARK	DATE	DESCRIPTION
A	11/13/2025	DSA BACKCHECK

TETER, LLP
FRESNO HEADQUARTERS
VISALIA | BAKERSFIELD | MODESTO | SAN LUIS OBISPO
ARCHITECTS ENGINEERS CONNECTED

VISALIA CAMPUS UNIVERSITY CENTER
COLLEGE OF THE SEQUOIAS
4999 E. BARDSLEY AVE.
TULARE, CA

DRAWING TITLE
FIRST FLOOR PIPING PLAN WEST

PROJECT NO.
22-12498

DRAWING
FP210.2

PLOT DATE: 9/12/2025 11:08:35 AM

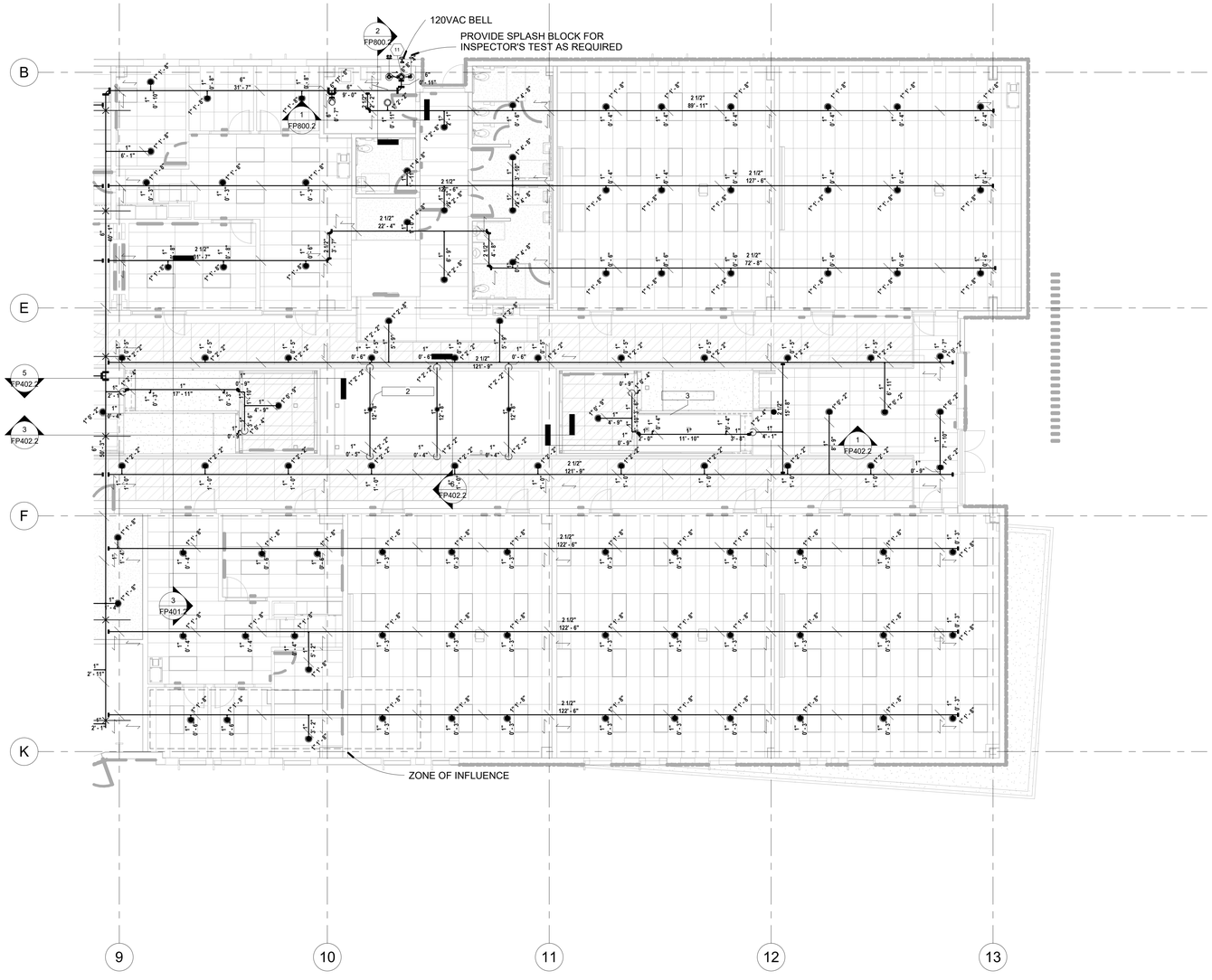

1 1ST FLOOR EAST
1/8" = 1'-0"

0' 4' 8' 16'

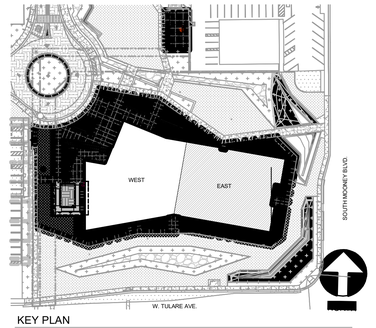

KEY PLAN

SYMBOLS LEGEND

- PIPE DIAMETER, CUT LENGTH, AND SECTION LENGTHS
- PIPE DIAMETER AND CUT LENGTH
- PIPE HANGER
- PIPE CHANGE IN ELEVATION
- LATERAL SWAY BRACE
- LONGITUDINAL SWAY BRACE
- 4-WAY SWAY BRACE
- TRAPEZE HANGER
- FLEX DROP
- HYDRAULIC NODE
- ALARM BELL
- PAV POTTER AIR VENT
- UPRIGHT SPRINKLER
- PENDENT SPRINKLER
- SIDEWALL SPRINKLER
- CONCEALED PENDENT SPRINKLER
- EXTENDED COVERAGE SPRINKLER
- D DRY PENDENT SPRINKLER

KEYNOTES

1. ACOUSTICAL CLOUD CEILINGS TO HAVE CONCEALED PENDENTS INSTALLED IN CLOUD WITH UPRIGHTS INSTALLED ABOVE CLOUD CEILING. ALL CONCEALED PENDENTS TO BE INSTALLED ON 36" FLEX DROPS.
2. EXPOSED PIPING AND FITTINGS BELOW STAIRS AND UNDER STEEL GRATING SHALL BE STAINLESS STEEL. ALL PIPING NOT EXPOSED SHALL BE BLACK STEEL IN ACCORDANCE WITH THE GENERAL INFORMATION SHEET MATERIALS TABLE.
3. PIPING UNDER STAIRS SHALL BE SLOPED TO RUN BELOW STAIR TREADS BUT ABOVE STAIR CEILING FINISH. WHERE DOUBLE 90 "SWING JOINTS" MUST BE EXPOSED TO TRANSITION TO ANOTHER AREA. PIPING AND FITTINGS SHALL BE STAINLESS STEEL.

CONCEALED COVER PLATE NOTES

1. ACOUSTICAL CEILINGS WITH WHITE TILES SHALL HAVE WHITE CONCEALED COVER PLATES INSTALLED
2. ENTRY LOBBY CEILING WITH BRUSHED ALUMINUM FINISH SHALL HAVE BRUCHED CHROME FINISHED COVERPLATES
3. CORRIDOR CEILING WITH CUSTOM LIGHT GRAY COLORED FINISH TO HAVE CUSTOM COVER PLATE FROM VIKING SUPPLYNET TO MATCH. COLOR CODE TO BE PROVIDED
4. CORRIDOR WITH CUSTOM COLLEGE OF THE SEQUOIAS ORANGE TILES SHALL HAVE CUSTOM COVER PLATE FROM VIKING SUPPLYNET TO MATCH.
RGB COLOR CODE
BLUE= 0/84/164
ORANGE 247/142/29
GREEN 141/198/63

GENERAL DESIGN NOTES

1. ANY EXPOSED PIPING OR FITTINGS SUCH AS IN LECTURE HALL AND AT SKYLIGHT LOCATIONS SHALL BE PAINTED TO MATCH CEILING PAINT COLOR.
2. SKYLIGHT SPRINKLERS SHALL BE CHROME FINISHED
3. EXPOSED SPRINKLERS AT STAIRS AND UNDER STEEL GRATING SHALL BE CHROME FINISHED TO MATCH THE STAINLESS STEEL PIPING.
4. MECHANICAL SPACE PLAN EAST OF LECTURE HALL HAS A NON-COMBUSTIBLE CONCEALED SPACE ABOVE DECK. THIS AREA HAS BEEN OMMITTED FROM PROTECTION IN ACCORDACE WITH NFPA 13.
5. ALL SPRINKLERS IN LECTURE HALL CLOUD CEILINGS SHALL BE CENTERED BETWEEN CEILING TEES.
6. ALL ACT CEILIING CONCEALED SPRINKLERS SHALL BE CENTERED IN TILES.
7. SPRINKLERS HAVE BEEN OMITTED FROM EXTERIOR PROJECTIONS IN ACCORDANCE WITH NFPA 13 9.2.3.2
8. ALL CONCEALED SPACES HAVE BEEN OMITTED FROM PROTECTION IN ACCORDANCE WITH NFPA 13 AS THESE AREAS ARE OF NON-COMBUSTIBLE CONSTRUCTION AND NON-OCCUPIABLE.

IDENTIFICATION STAMP
DIV. OF THE STATE ARCHITECT
APP: 02-122821 INC: 2
REVIEWED FOR
SS ☑ FLS ☑ ACS ☑
DATE: 11/20/2025

Teter, Inc. expressly reserves its common law copyright and other property rights in these plans. This document, the ideas and designs incorporated herein, as an instrument of professional service, is not to be used in whole or part, for any other project without prior written authorization.

MARK	DATE	DESCRIPTION
A.	11/13/2025	DSA BACKCHECK

TETER, LLP
ARCHITECTS ENGINEERS CONNECTED
FRESNO HEADQUARTERS
VISALIA | BAKERSFIELD | MODESTO | SAN LUIS OBISPO

VISALIA CAMPUS UNIVERSITY CENTER
COLLEGE OF THE SEQUOIAS
4999 E. BARDSLEY AVE.
TULARE, CA

DRAWING TITLE
FIRST FLOOR PIPING PLAN EAST

PROJECT NO.
22-12498

DRAWING
FP211.2

C:\Users\sdonn\Box\Cordiner Consulting LLC\Projects 2023\23-023 - TET - New University Center Building\6_Submittals_Design\12498-FP-COS University Center 2024 DSA Backcheck.rvt

PLOT DATE: 9/12/2025 11:08:41 AM

C:\Users\sdonn\Box\Cordiner Consulting LLC\Projects 2023\23-023 - TET - New University Center Building\6_Submittals\1_Design\12498-FP-COS University Center 2024 DSA Backcheck.rvt

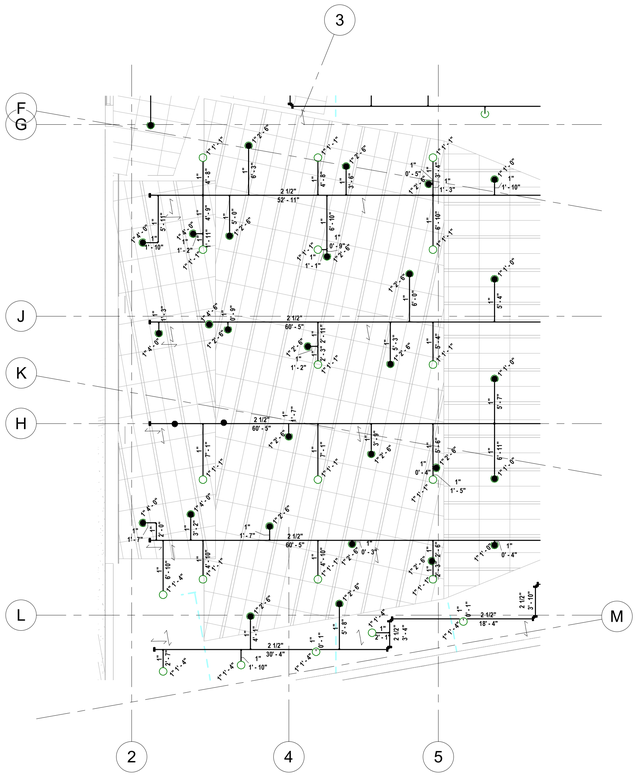

1 LECTURE HALL CLOUD CEILINGS
1/8" = 1'-0"

0' 4' 8' 16'

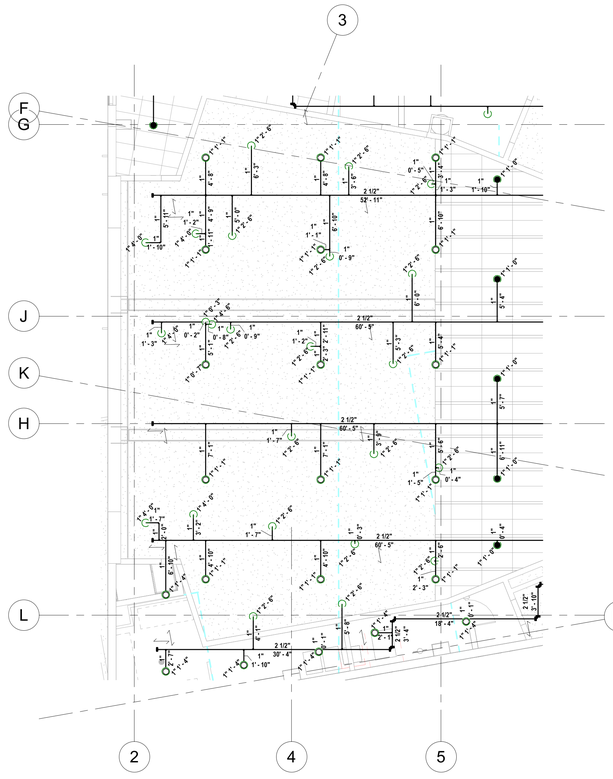

2 LECTURE HALL OVERHEAD PROTECTION
1/8" = 1'-0"

0' 4' 8' 16'

SYMBOLS LEGEND

- PIPE DIAMETER, CUT LENGTH, AND SECTION LENGTHS
- PIPE DIAMETER AND CUT LENGTH
- PIPE HANGER
- PIPE CHANGE IN ELEVATION
- LATERAL SWAY BRACE
- LONGITUDINAL SWAY BRACE
- 4-WAY SWAY BRACE
- TRAPEZE HANGER
- FLEX DROP
- HYDRAULIC NODE
- ALARM BELL
- PAV POTTER AIR VENT
- UPRIGHT SPRINKLER
- PENDENT SPRINKLER
- SIDEWALL SPRINKLER
- CONCEALED PENDENT SPRINKLER
- EXTENDED COVERAGE SPRINKLER
- DRY PENDENT SPRINKLER

KEYNOTES

1. ACOUSTICAL CLOUD CEILINGS TO HAVE CONCEALED PENDENTS INSTALLED IN CLOUD WITH UPRIGHTS INSTALLED ABOVE CLOUD CEILING. ALL CONCEALED PENDENTS TO BE INSTALLED ON 36" FLEX DROPS.
2. EXPOSED PIPING AND FITTINGS BELOW STAIRS AND UNDER STEEL GRATING SHALL BE STAINLESS STEEL. ALL PIPING NOT EXPOSED SHALL BE BLACK STEEL IN ACCORDANCE WITH THE GENERAL INFORMATION SHEET MATERIALS TABLE.
3. PIPING UNDER STAIRS SHALL BE SLOPED TO RUN BELOW STAIR TREADS BUT ABOVE STAIR CEILING FINISH. WHERE DOUBLE 90 "SWING JOINTS" MUST BE EXPOSED TO TRANSITION TO ANOTHER AREA, PIPING AND FITTINGS SHALL BE STAINLESS STEEL.

CONCEALED COVER PLATE NOTES

1. ACOUSTICAL CEILINGS WITH WHITE TILES SHALL HAVE WHITE CONCEALED COVER PLATES INSTALLED
2. ENTRY LOBBY CEILING WITH BRUSHED ALUMINUM FINISH SHALL HAVE BRUCHED CHROME FINISHED COVERPLATES
3. CORRIDOR CEILING WITH CUSTOM LIGHT GRAY COLORED FINISH TO HAVE CUSTOM COVER PLATE FROM VIKING SUPPLYNET TO MATCH. COLOR CODE TO BE PROVIDED
4. CORRIDOR WITH CUSTOM COLLEGE OF THE SEQUOIAS ORANGE TILES SHALL HAVE CUSTOM COVER PLATE FROM VIKING SUPPLYNET TO MATCH.
RGB COLOR CODE
BLUE= 0/84/164
ORANGE 247/142/29
GREEN 141/198/63

GENERAL DESIGN NOTES

1. ANY EXPOSED PIPING OR FITTINGS SUCH AS IN LECTURE HALL AND AT SKYLIGHT LOCATIONS SHALL BE PAINTED TO MATCH CEILING PAINT COLOR.
2. SKYLIGHT SPRINKLERS SHALL BE CHROME FINISHED
3. EXPOSED SPRINKLERS AT STAIRS AND UNDER STEEL GRATING SHALL BE CHROME FINISHED TO MATCH THE STAINLESS STEEL PIPING.
4. MECHANICAL SPACE PLAN EAST OF LECTURE HALL HAS A NON-COMBUSTIBLE CONCEALED SPACE ABOVE DECK. THIS AREA HAS BEEN OMMITTED FROM PROTECTION IN ACCORDACE WITH NFPA 13.
5. ALL SPRINKLERS IN LECTURE HALL CLOUD CEILINGS SHALL BE CENTERED BETWEEN CEILING TEES.
6. ALL ACT CEILIING CONCEALED SPRINKLERS SHALL BE CENTERED IN TILES.
7. UPRIGHT SPRINKLERS IN LECTURE HALL ARE ABOVE CLOUD CEILINGS AND SHOULD BE INSTALLED BASED ON SPACING SHOWN TO PROTECT ABOVE CLOUD CEILINGS AND BEYOND. PROTECTION BELOW CLOUD CEILINGS IS PROVIDED VIA THE CONCEALED PENDENT SPRINKLERS. REFER TO FIRE PROTECTION REFLECED CEILING PLAN SHEET FP610.2 FOR CONCEALED SPRINKLER LAYOUT COMPARED TO COULD CEILINGS.
8. ALL CONCEALED SPACES HAVE BEEN OMITTED FROM PROTECTION IN ACCORDANCE WITH NFPA 13 AS THESE AREAS ARE OF NON-COMBUSTIBLE CONSTRUCTION AND NON-OCCUPIABLE.

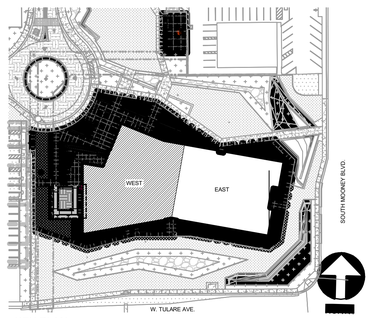

KEY PLAN

IDENTIFICATION STAMP
DIV. OF THE STATE ARCHITECT
APP: 02-122821 INC: 2
REVIEWED FOR
SS ☑ FLS ☑ ACS ☑
DATE: 11/20/2025

Teter, Inc. expressly reserves its common law copyright and other property rights in these plans. This document, the ideas and designs incorporated herein, as an instrument of professional service, is not to be used in whole or part, for any other project without prior written authorization.

MARK	DATE	DESCRIPTION
A.	11/13/2025	DSA BACKCHECK

TETER, LLP
ARCHITECTS ENGINEERS CONNECTED
FRESNO HEADQUARTERS
VISALIA | BAKERSFIELD | MODESTO | SAN LUIS OBISPO

VISALIA CAMPUS UNIVERSITY CENTER
COLLEGE OF THE SEQUOIAS
4999 E. BARDSLEY AVE.
TULARE, CA

DRAWING TITLE
FIRST FLOOR PIPING PLAN LECTURE HALL CEILINGS

PROJECT NO.
22-12498

DRAWING
FP212.2

PLOT DATE: 9/12/2025 11:08:46 AM

C:\Users\sdonn\Box\Cordiner Consulting LLC\Projects 2023\23-023 - TET - New University Center Building\6_Submittals\1_Design\12498-FP-CCS University Center 2024 DSA Backcheck.rvt

ZONE OF INFLUENCE

UP TO SKYLIGHT SPRINKLERS (REFER TO RCP)

Entry Overhead Hydraulic Calculations	
Remote Area 2	
OCCUPANCY CLASSIFICATION	Light Hazard
DENSITY (gpm/ft²)	0.100 for 1500.00ft² (Actual 1520.32ft²)
TOTAL HOSE STREAMS	100.00
TOTAL HEADS FLOWING	12
K-FACTOR	8
TOTAL WATER REQUIRED	591.39
TOTAL PRESSURE REQUIRED	62.275
SAFETY MARGIN (psi)	+8.457 (12.0%)

Prep/Storage Office Hydraulic Calculations	
Remote Area 1	
OCCUPANCY CLASSIFICATION	Ordinary Group II
DENSITY (gpm/ft²)	0.200 for 1500.00ft² (Actual 1610.37ft²)
TOTAL HOSE STREAMS	250.00
TOTAL HEADS FLOWING	16
K-FACTOR	5.6
TOTAL WATER REQUIRED	646.74
TOTAL PRESSURE REQUIRED	54.132
SAFETY MARGIN (psi)	+16.372 (23.2%)

1 2ND FLOOR WEST
1/8" = 1'-0"

0' 4' 8' 16'

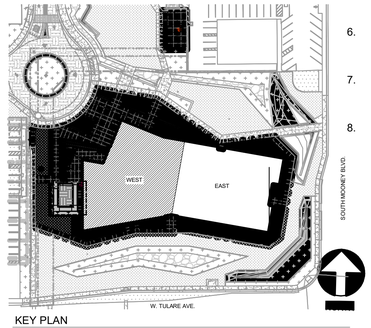

KEY PLAN

SYMBOLS LEGEND

- PIPE DIAMETER, CUT LENGTH, AND SECTION LENGTHS
- PIPE DIAMETER AND CUT LENGTH
- PIPE HANGER
- PIPE CHANGE IN ELEVATION
- LATERAL SWAY BRACE
- LONGITUDINAL SWAY BRACE
- 4-WAY SWAY BRACE
- TRAPEZE HANGER
- FLEX DROP
- HYDRAULIC NODE
- ALARM BELL
- PAV POTTER AIR VENT
- UPRIGHT SPRINKLER
- PENDENT SPRINKLER
- SIDEWALL SPRINKLER
- CONCEALED PENDENT SPRINKLER
- EXTENDED COVERAGE SPRINKLER
- DRY PENDENT SPRINKLER

KEYNOTES

1. ACOUSTICAL CLOUD CEILINGS TO HAVE CONCEALED PENDENTS INSTALLED IN CLOUD WITH UPRIGHTS INSTALLED ABOVE CLOUD CEILING. ALL CONCEALED PENDENTS TO BE INSTALLED ON 36" FLEX DROPS.
2. EXPOSED PIPING AND FITTINGS BELOW STAIRS AND UNDER STEEL GRATING SHALL BE STAINLESS STEEL. ALL PIPING NOT EXPOSED SHALL BE BLACK STEEL IN ACCORDANCE WITH THE GENERAL INFORMATION SHEET MATERIALS TABLE.
3. PIPING UNDER STAIRS SHALL BE SLOPED TO RUN BELOW STAIR TREADS BUT ABOVE STAIR CEILING FINISH. WHERE DOUBLE 90 "SWING JOINTS" MUST BE EXPOSED TO TRANSITION TO ANOTHER AREA, PIPING AND FITTINGS SHALL BE STAINLESS STEEL.
4. LOWEST EXPECTED TEMPERATURE IN COOLER TO BE 35°F

CONCEALED COVER PLATE NOTES

1. ACOUSTICAL CEILINGS WITH WHITE TILES SHALL HAVE WHITE CONCEALED COVER PLATES INSTALLED
2. ENTRY LOBBY CEILING WITH BRUSHED ALUMINUM FINISH SHALL HAVE BRUCHED CHROME FINISHED COVERPLATES
3. CORRIDOR CEILING WITH CUSTOM LIGHT GRAY COLORED FINISH TO HAVE CUSTOM COVER PLATE FROM VIKING SUPPLYNET TO MATCH. COLOR CODE TO BE PROVIDED
4. CORRIDOR WITH CUSTOM COLLEGE OF THE SEQUOIAS ORANGE TILES SHALL HAVE CUSTOM COVER PLATE FROM VIKING SUPPLYNET TO MATCH.
   RGB COLOR CODE
   BLUE= 0/84/164
   ORANGE 247/142/29
   GREEN 141/198/63

GENERAL DESIGN NOTES

1. ANY EXPOSED PIPING OR FITTINGS SUCH AS IN LECTURE HALL AND AT SKYLIGHT LOCATIONS SHALL BE PAINTED TO MATCH CEILING PAINT COLOR.
2. SKYLIGHT SPRINKLERS SHALL BE CHROME FINISHED
3. EXPOSED SPRINKLERS AT STAIRS AND UNDER STEEL GRATING SHALL BE CHROME FINISHED TO MATCH THE STAINLESS STEEL PIPING.
4. MECHANICAL SPACE PLAN EAST OF LECTURE HALL HAS A NON-COMBUSTIBLE CONCEALED SPACE ABOVE DECK. THIS AREA HAS BEEN OMMITTED FROM PROTECTION IN ACCORDACE WITH NFPA 13.
5. ALL SPRINKLERS IN LECTURE HALL CLOUD CEILINGS SHALL BE CENTERED BETWEEN CEILING TEES.
6. ALL ACT CEILIING CONCEALED SPRINKLERS SHALL BE CENTERED IN TILES.
7. SPRINKLERS HAVE BEEN OMITTED FROM EXTERIOR PROJECTIONS IN ACCORDANCE WITH NFPA 13 9.2.3.2
8. ALL CONCEALED SPACES HAVE BEEN OMITTED FROM PROTECTION IN ACCORDANCE WITH NFPA 13 AS THESE AREAS ARE OF NON-COMBUSTIBLE CONSTRUCTION AND NON-OCCUPIABLE.

IDENTIFICATION STAMP
DIV. OF THE STATE ARCHITECT
APP: 02-122821 INC: 2
REVIEWED FOR
SS ☑ FLS ☑ ACS ☑
DATE: 11/20/2025

Teter, Inc. expressly reserves its common law copyright and other property rights in these plans. This document, the ideas and designs incorporated herein, as an instrument of professional service, is not to be used in whole or part, for any other project without prior written authorization.

MARK	DATE	DESCRIPTION
A.	11/13/2025	DSA BACKCHECK

TETER, LLP
ARCHITECTS ENGINEERS CONNECTED
FRESNO HEADQUARTERS
VISALIA | BAKERSFIELD | MODESTO | SAN LUIS OBISPO

VISALIA CAMPUS UNIVERSITY CENTER
COLLEGE OF THE SEQUOIAS
4999 E. BARDSLEY AVE.
TULARE, CA

PROJECT NO. 22-12498

DRAWING TITLE: SECOND FLOOR PIPING PLAN WEST

DRAWING FP220.2

PLOT DATE: 9/12/2025 11:08:52 AM

C:\Users\sdonn\Box\Cordiner Consulting LLC\Projects 2023\23-023 - TET - New University Center Building\6_Submittals\1_Design\12498-FP-COS University Center 2024 DSA Backcheck.rvt

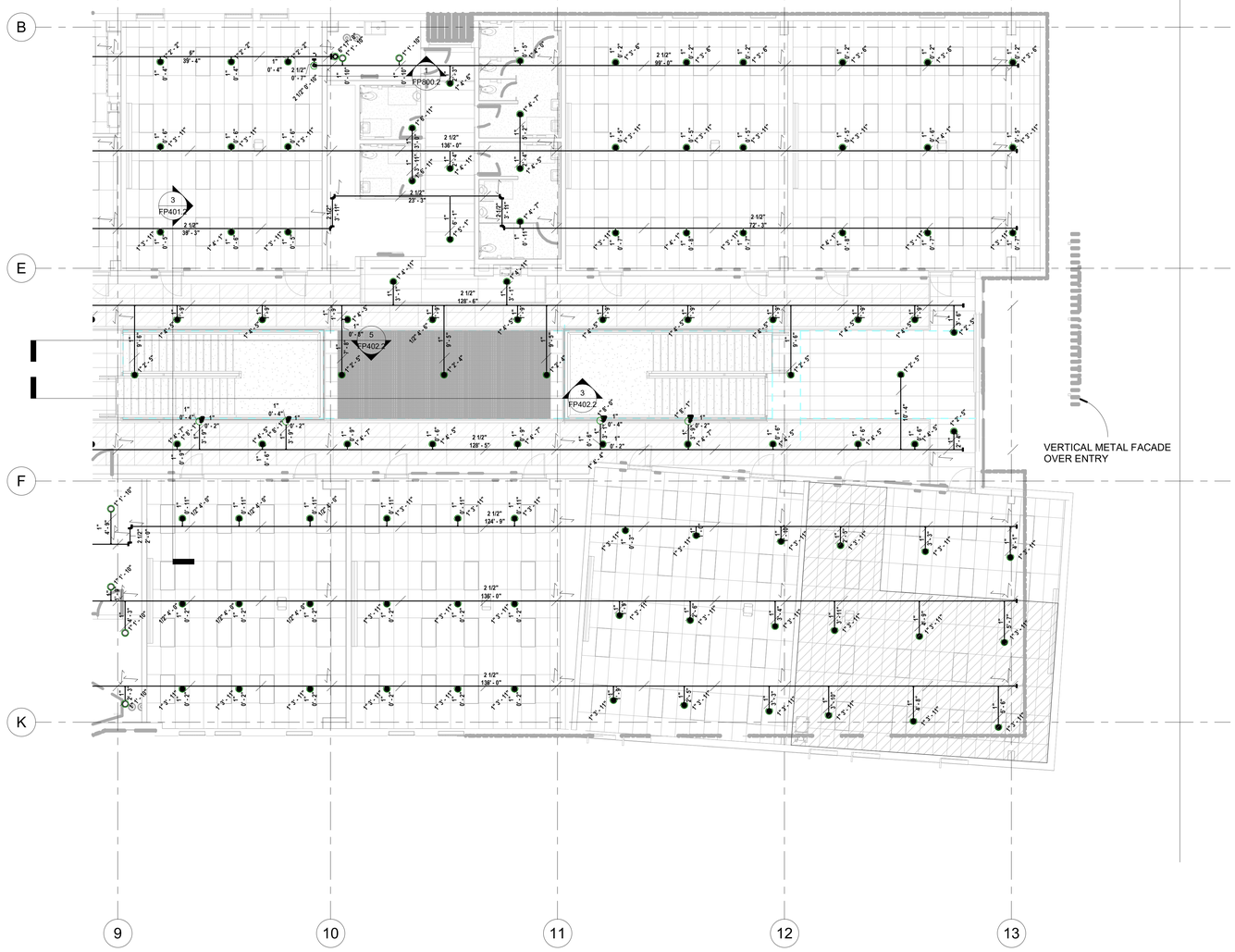

1 2ND FLOOR EAST
1/8" = 1'-0"

0' 4' 8' 16'

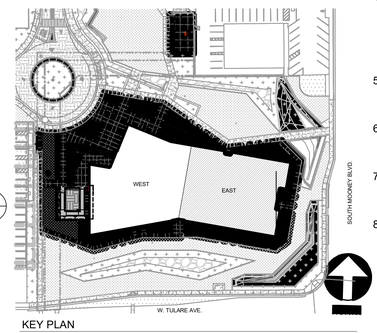

KEY PLAN

SYMBOLS LEGEND

- PIPE DIAMETER, CUT LENGTH, AND SECTION LENGTHS
- PIPE DIAMETER AND CUT LENGTH
- PIPE HANGER
- PIPE CHANGE IN ELEVATION
- LATERAL SWAY BRACE
- LONGITUDINAL SWAY BRACE
- 4-WAY SWAY BRACE
- TRAPEZE HANGER
- FLEX DROP
- HYDRAULIC NODE
- ALARM BELL
- PAV POTTER AIR VENT
- UPRIGHT SPRINKLER
- PENDENT SPRINKLER
- SIDEWALL SPRINKLER
- CONCEALED PENDENT SPRINKLER
- EXTENDED COVERAGE SPRINKLER
- D DRY PENDENT SPRINKLER

KEYNOTES

1. ACOUSTICAL CLOUD CEILINGS TO HAVE CONCEALED PENDENTS INSTALLED IN CLOUD WITH UPRIGHTS INSTALLED ABOVE CLOUD CEILING. ALL CONCEALED PENDENTS TO BE INSTALLED ON 36" FLEX DROPS.
2. EXPOSED PIPING AND FITTINGS BELOW STAIRS AND UNDER STEEL GRATING SHALL BE STAINLESS STEEL. ALL PIPING NOT EXPOSED SHALL BE BLACK STEEL IN ACCORDANCE WITH THE GENERAL INFORMATION SHEET MATERIALS TABLE.
3. PIPING UNDER STAIRS SHALL BE SLOPED TO RUN BELOW STAIR TREADS BUT ABOVE STAIR CEILING FINISH. WHERE DOUBLE 90 "SWING JOINTS" MUST BE EXPOSED TO TRANSITION TO ANOTHER AREA, PIPING AND FITTINGS SHALL BE STAINLESS STEEL.

CONCEALED COVER PLATE NOTES

1. ACOUSTICAL CEILINGS WITH WHITE TILES SHALL HAVE WHITE CONCEALED COVER PLATES INSTALLED
2. ENTRY LOBBY CEILING WITH BRUSHED ALUMINUM FINISH SHALL HAVE BRUCHED CHROME FINISHED COVERPLATES
3. CORRIDOR CEILING WITH CUSTOM LIGHT GRAY COLORED FINISH TO HAVE CUSTOM COVER PLATE FROM VIKING SUPPLYNET TO MATCH. COLOR CODE TO BE PROVIDED
4. CORRIDOR WITH CUSTOM COLLEGE OF THE SEQUOIAS ORANGE TILES SHALL HAVE CUSTOM COVER PLATE FROM VIKING SUPPLYNET TO MATCH.
   RGB COLOR CODE
   BLUE= 0/84/164
   ORANGE 247/142/29
   GREEN 141/198/63

GENERAL DESIGN NOTES

1. ANY EXPOSED PIPING OR FITTINGS SUCH AS IN LECTURE HALL AND AT SKYLIGHT LOCATIONS SHALL BE PAINTED TO MATCH CEILING PAINT COLOR.
2. SKYLIGHT SPRINKLERS SHALL BE CHROME FINISHED
3. EXPOSED SPRINKLERS AT STAIRS AND UNDER STEEL GRATING SHALL BE CHROME FINISHED TO MATCH THE STAINLESS STEEL PIPING.
4. MECHANICAL SPACE PLAN EAST OF LECTURE HALL HAS A NON-COMBUSTIBLE CONCEALED SPACE ABOVE DECK. THIS AREA HAS BEEN OMMITTED FROM PROTECTION IN ACCORDACE WITH NFPA 13.
5. ALL SPRINKLERS IN LECTURE HALL CLOUD CEILINGS SHALL BE CENTERED BETWEEN CEILING TEES.
6. ALL ACT CEILIING CONCEALED SPRINKLERS SHALL BE CENTERED IN TILES.
7. SPRINKLERS HAVE BEEN OMITTED FROM EXTERIOR PROJECTIONS IN ACCORDANCE WITH NFPA 13 9.2.3.2
8. ALL CONCEALED SPACES HAVE BEEN OMITTED FROM PROTECTION IN ACCORDANCE WITH NFPA 13 AS THESE AREAS ARE OF NON-COMBUSTIBLE CONSTRUCTION AND NON-OCCUPIABLE.

IDENTIFICATION STAMP
DIV. OF THE STATE ARCHITECT
APP: 02-122821 INC: 2
REVIEWED FOR
SS ☑ FLS ☑ ACS ☑
DATE: 11/20/2025

Teter, Inc. expressly reserves its common law copyright and other property rights in these plans. This document, the ideas and designs incorporated herein, as an instrument of professional service, is not to be used in whole or part, for any other project without prior written authorization.

MARK	DATE	DESCRIPTION
A.	11/13/2025	DSA BACKCHECK

TETER, LLP
FRESNO HEADQUARTERS
VISALIA | BAKERSFIELD | MODESTO | SAN LUIS OBISPO
ARCHITECTS ENGINEERS CONNECTED

VISALIA CAMPUS UNIVERSITY CENTER
COLLEGE OF THE SEQUOIAS
4999 E. BARDSLEY AVE.
TULARE, CA

DRAWING TITLE
SECOND FLOOR PIPING PLAN EAST

PROJECT NO.
22-12498

DRAWING
FP221.2

PLOT DATE: 9/12/2025 11:09:03 AM

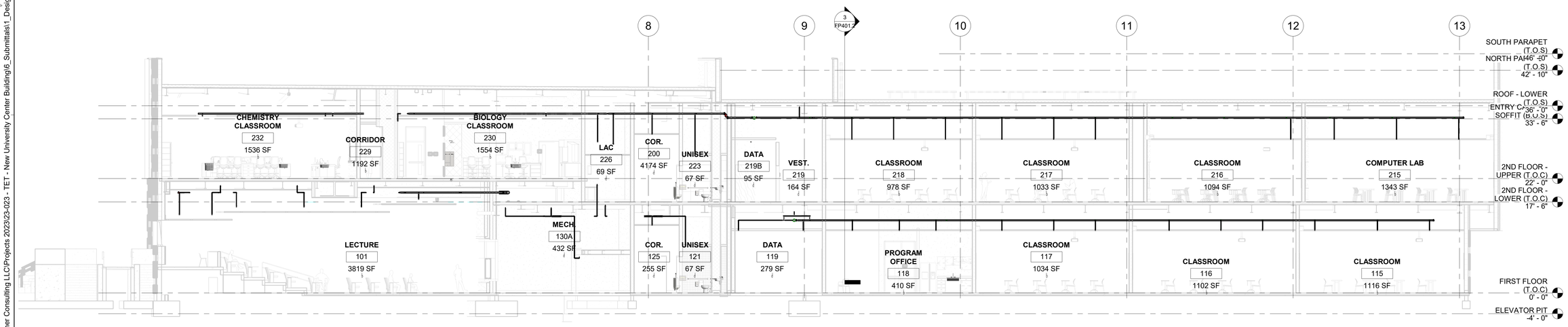

1 SOUTH INTERNAL ELEVATION
1/8" = 1'-0"

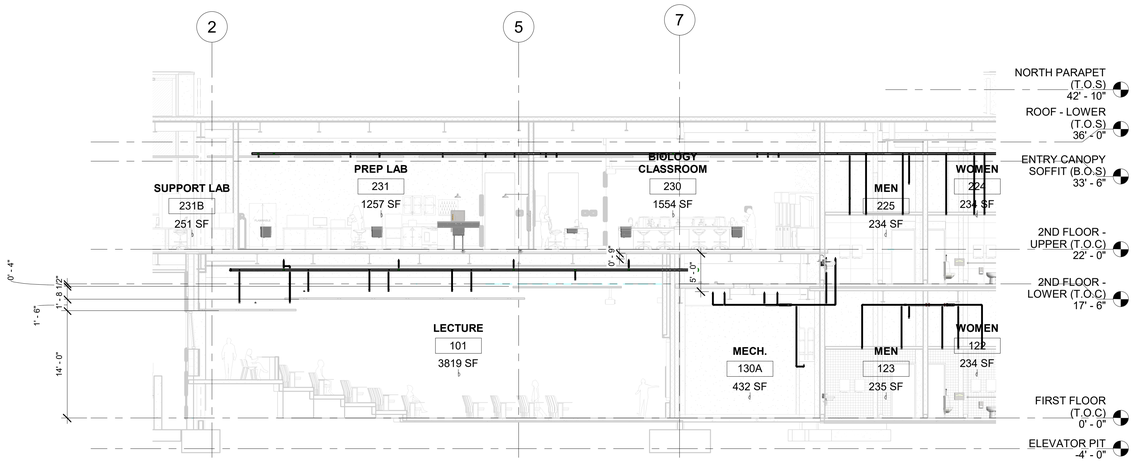

2 LECTURE HALL/LAB SOUTH INTERIOR ELEVATION
1/8" = 1'-0"

IDENTIFICATION STAMP
DIV. OF THE STATE ARCHITECT
APP: 02-122821 INC: 2
REVIEWED FOR
SS ☑ FLS ☑ ACS ☑
DATE: 11/20/2025

Teter, Inc. expressly reserves its common law copyright and other property rights in these plans. This document, the ideas and designs incorporated herein, as an instrument of professional service, is not to be used in whole or part, for any other project without prior written authorization.

MARK	DATE	DESCRIPTION
A.	11/13/2025	DSA BACKCHECK

TETER, LLP
ARCHITECTS ENGINEERS CONNECTED
FRESNO HEADQUARTERS
VISALIA | BAKERSFIELD | MODESTO | SAN LUIS OBISPO

VISALIA CAMPUS UNIVERSITY CENTER
COLLEGE OF THE SEQUOIAS
4999 E. BARDSLEY AVE.
TULARE, CA

DRAWING TITLE
ELEVATIONS

PROJECT NO.
22-12498

DRAWING
FP300.2

C:\Users\sdonn\Box\Cordiner Consulting LLC\Projects 2023\23-023 - TET - New University Center Building\6_Submittals_Design\12498-FP-COS University Center 2024 DSA Backcheck.rvt
PLOT DATE: 9/12/2025 11:09:30 AM

C:\Users\sdonn\Box\Cordiner Consulting LLC\Projects 2023\23-023 - TET - New University Center Building\6_Submittals\1_Design\12498-FP-COS University Center 2024 DSA Backcheck.rvt

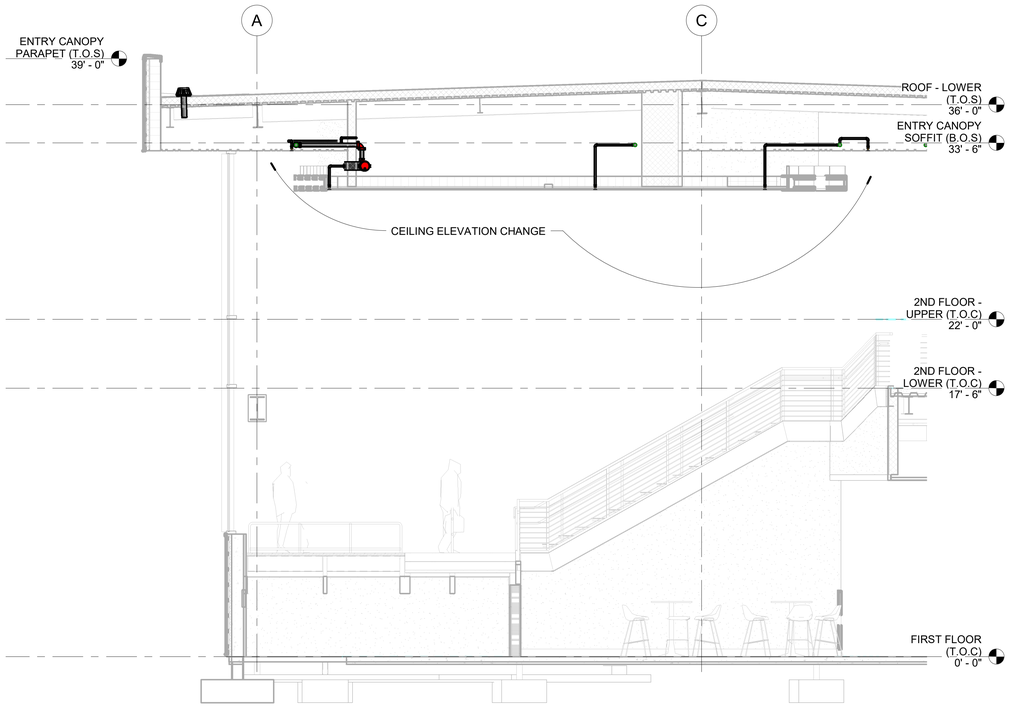

1 LOBBY STAIRS
1/4" = 1'-0"

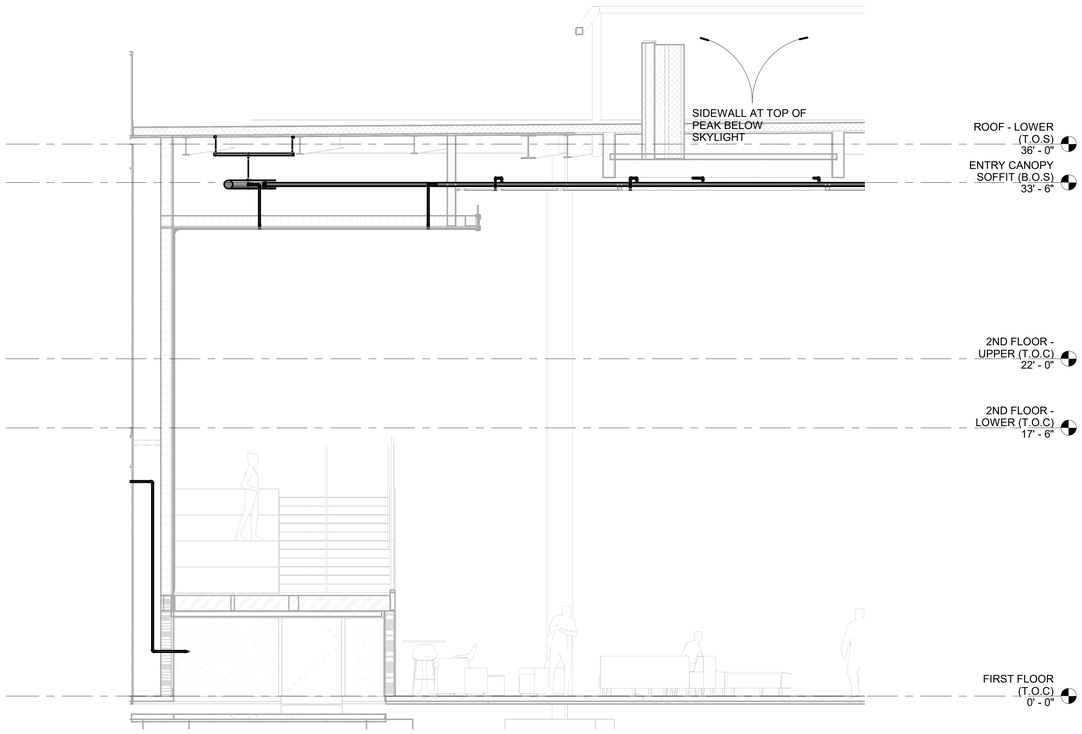

2 LOBBY STAIRS NORTH SECTION
1/4" = 1'-0"

PLOT DATE: 9/12/2025 11:09:56 AM

IDENTIFICATION STAMP
DIV. OF THE STATE ARCHITECT
APP: 02-122821 INC: 2
REVIEWED FOR
SS ☑ FLS ☑ ACS ☑
DATE: 11/20/2025

Teter, Inc. expressly reserves its statutory and common law copyright and other property rights in these plans. This document, the ideas and designs incorporated herein, as an instrument of professional service, is not to be used in whole or part, for any other project without prior written authorization.

MARK	DATE	DESCRIPTION
A	11/13/2025	DSA BACKCHECK

TETER, LLP
ARCHITECTS ENGINEERS CONNECTED
FRESNO HEADQUARTERS
VISALIA | BAKERSFIELD | MODESTO | SAN LUIS OBISPO

VISALIA CAMPUS UNIVERSITY CENTER
COLLEGE OF THE SEQUOIAS
4999 E. BARDSLEY AVE.
TULARE, CA

DRAWING TITLE
SECTIONS

PROJECT NO.
22-12498

DRAWING
FP400.2

C:\Users\sdonn\Box\Cordiner Consulting LLC\Projects 2023\23-023 - TET - New University Center Building\6_Submittals\1_Design\12498-FP-COS University Center 2024 DSA Backcheck.rvt

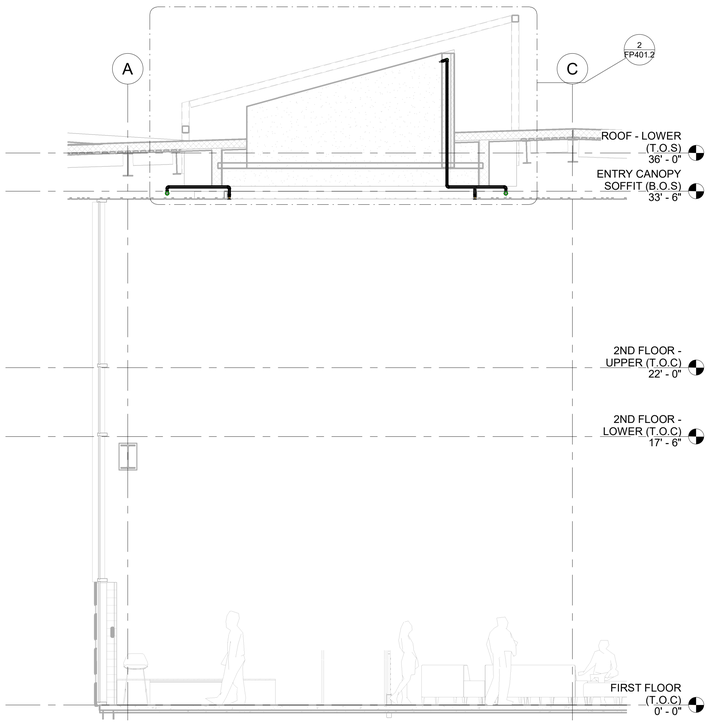

1 LOBBY SKYLIGHT
1/4" = 1'-0"

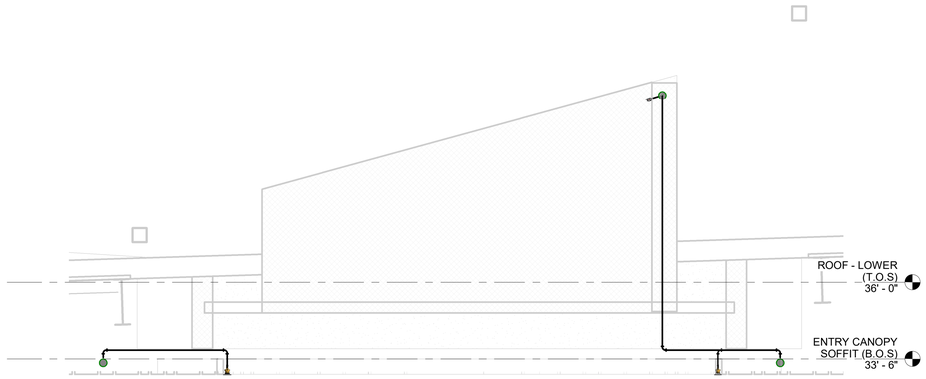

2 LOBBY SKYLIGHT PIPING
1/2" = 1'-0"

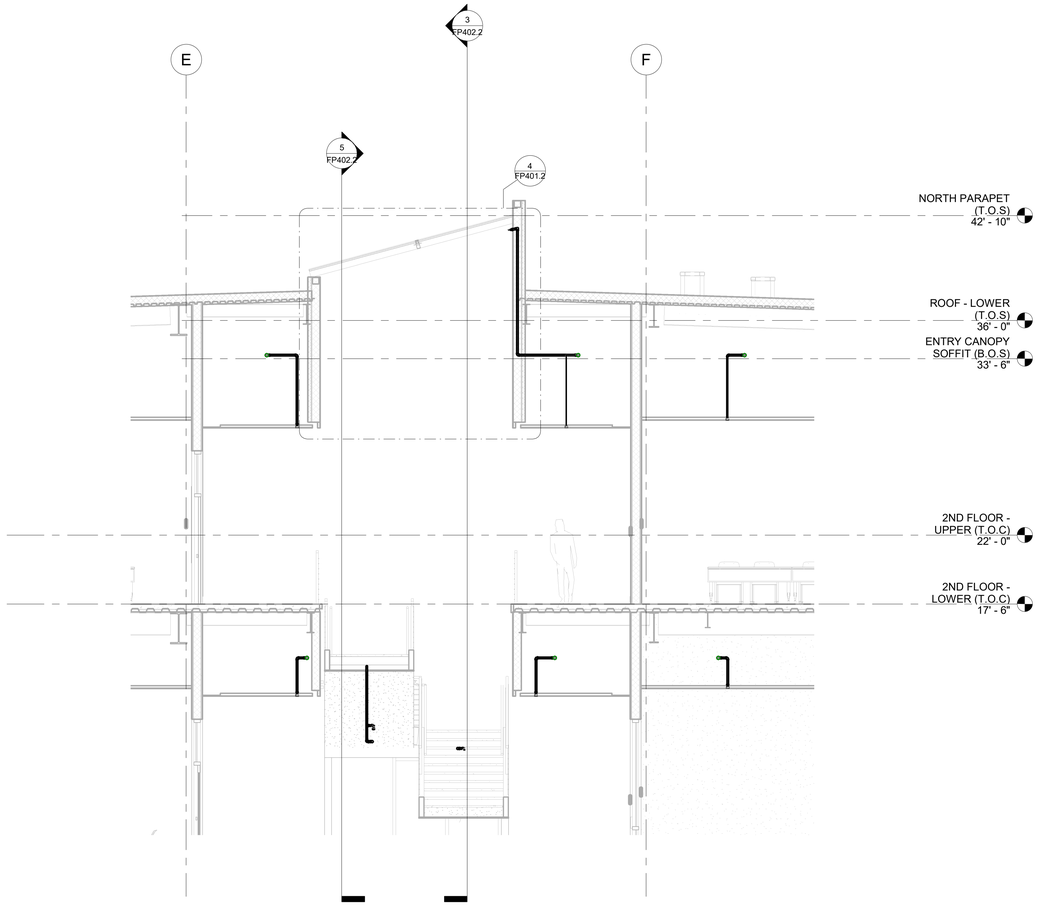

3 STAIR SKYLIGHT PIPING
1/4" = 1'-0"

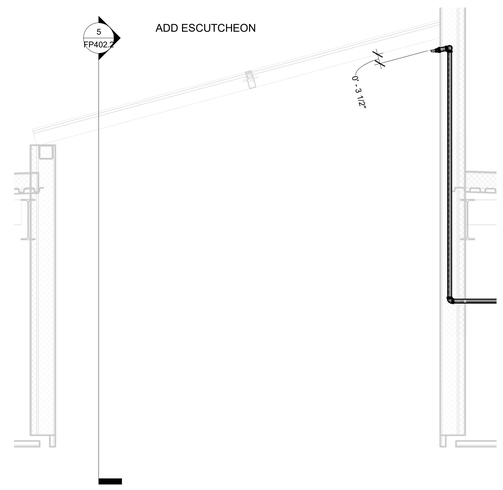

4 ENLARGED STAIR SKYLIGHT PIPING
1/2" = 1'-0"

PLOT DATE: 9/12/2025 11:10:17 AM

IDENTIFICATION STAMP
DIV. OF THE STATE ARCHITECT
APP: 02-122821 INC: 2
REVIEWED FOR
SS ☑ FLS ☑ ACS ☑
DATE: 11/20/2025

Teter, Inc. expressly reserves its common law copyright and other property rights in these plans. This document, the ideas and designs incorporated herein, as an instrument of professional service, is not to be used in whole or part, for any other project without prior written authorization.

MARK	DATE	DESCRIPTION
A.	11/13/2025	DSA BACKCHECK

TETER, LLP
ARCHITECTS ENGINEERS CONNECTED
FRESNO HEADQUARTERS
VISALIA | BAKERSFIELD | MODESTO | SAN LUIS OBISPO

VISALIA CAMPUS UNIVERSITY CENTER
COLLEGE OF THE SEQUOIAS
4999 E. BARDSLEY AVE.
TULARE, CA

DRAWING TITLE
SECTIONS

PROJECT NO.
22-12498

DRAWING
FP401.2

C:\Users\sonni\Box\Cordiner Consulting LLC\Projects 2023\23-023 - TET - New University Center Building\6_Submittals\1_Design\12498-FP-COS University Center 2024 DSA Backcheck.rvt

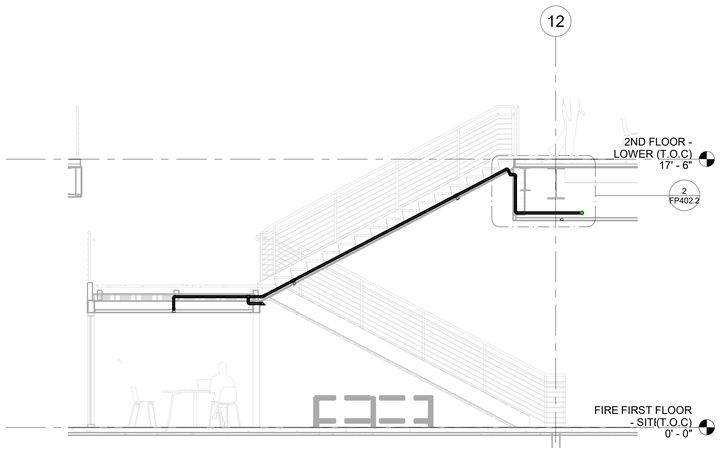

1 EAST STAIR PIPE ROUTING
1/4" = 1'-0"

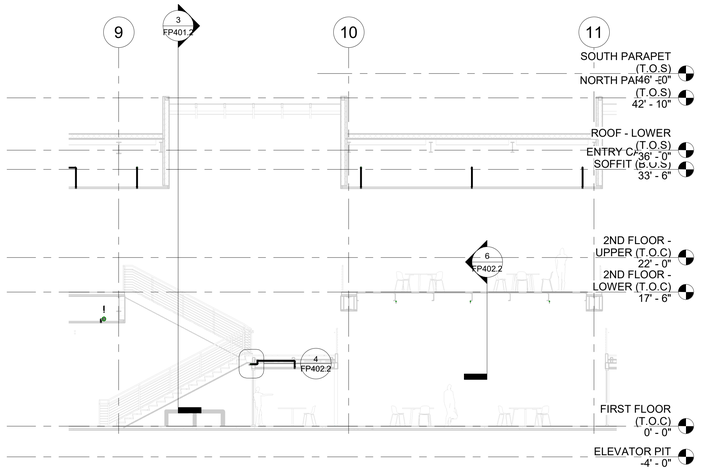

3 LANDING PIPING
1/8" = 1'-0"

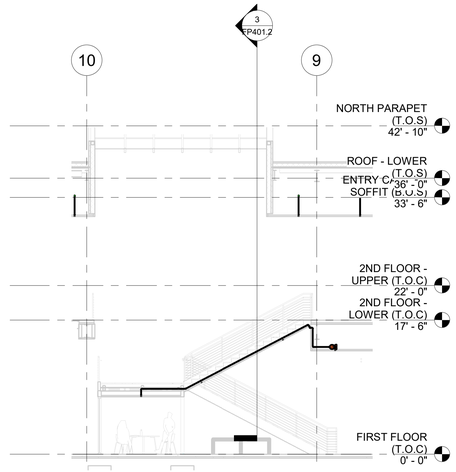

5 WEST STAIR PIPE ROUTING
1/8" = 1'-0"

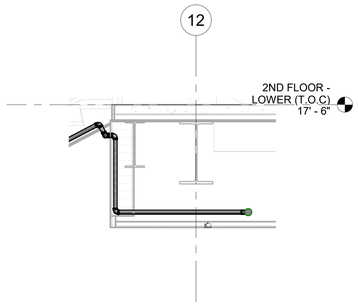

2 ENLARGED STAIR PIPING
1/2" = 1'-0"

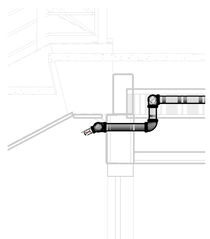

4 ENLARGED STAIR SIDEWALL
1" = 1'-0"

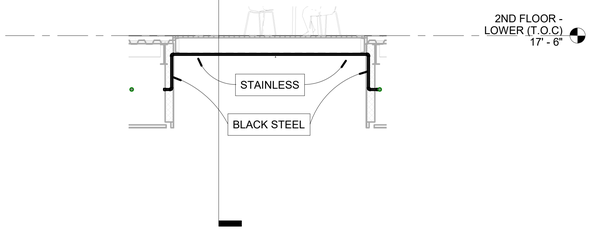

6 BELOW GRATING PROTECTION
1/4" = 1'-0"

IDENTIFICATION STAMP
DIV. OF THE STATE ARCHITECT
APP: 02-122821 INC: 2
REVIEWED FOR
SS ☑ FLS ☑ ACS ☑
DATE: 11/20/2025

Teter, Inc. expressly reserves its common law copyright and other property rights in these plans. This document, the ideas and designs incorporated herein, as an instrument of professional service, is not to be used in whole or in part, for any other project without prior written authorization.

MARK	DATE	DESCRIPTION
A	11/13/2025	DSA BACKCHECK

TETER, LLP
ARCHITECTS ENGINEERS CONNECTED
FRESNO HEADQUARTERS
VISALIA | BAKERSFIELD | MODESTO | SAN LUIS OBISPO

VISALIA CAMPUS UNIVERSITY CENTER
COLLEGE OF THE SEQUOIAS
4999 E. BARDSLEY AVE.
TULARE, CA

DRAWING TITLE
SECTIONS

PROJECT NO.
22-12498

DRAWING
FP402.2

PLOT DATE: 9/12/2025 11:10:30 AM

C:\Users\wacor\Box\Cordiner Consulting LLC\Projects 2023\23-023 - TET - New University Center Building\6_Submittals\1_Design\12498-FP-COS University Center 2024 DSA Backcheck.rvt

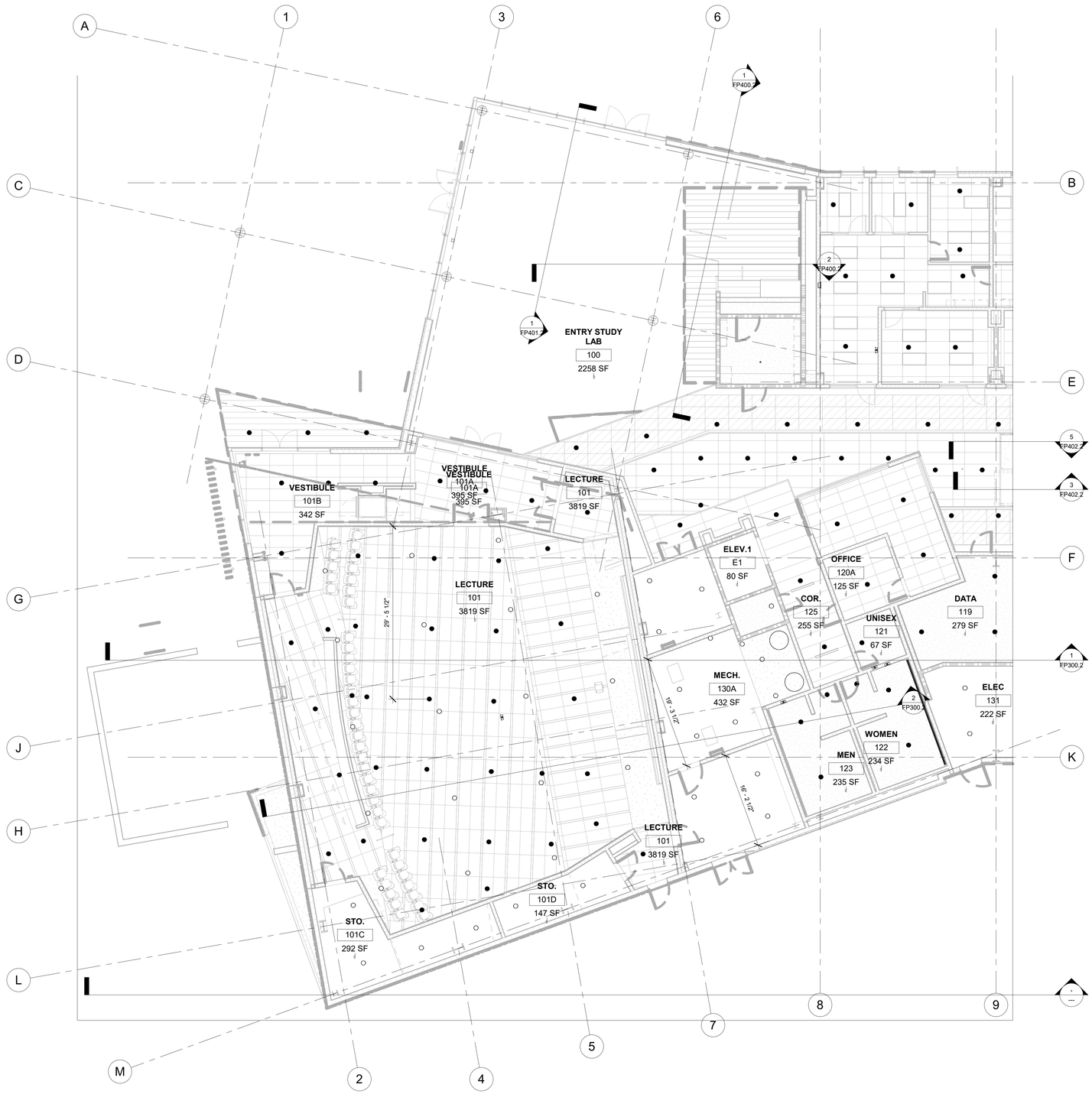

1 FIRST FLOOR WEST
1/8" = 1'-0"

0' 4' 8' 16'

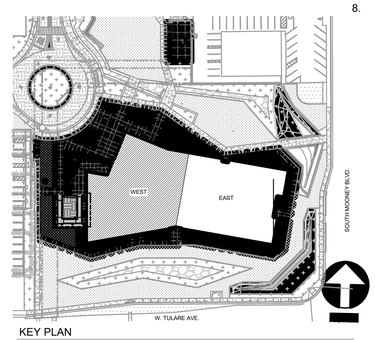

KEY PLAN

SYMBOLS LEGEND

- PIPE DIAMETER, CUT LENGTH, AND SECTION LENGTHS
- PIPE DIAMETER AND CUT LENGTH
- PIPE HANGER
- PIPE CHANGE IN ELEVATION
- LATERAL SWAY BRACE
- LONGITUDINAL SWAY BRACE
- 4-WAY SWAY BRACE
- TRAPEZE HANGER
- FLEX DROP
- HYDRAULIC NODE
- ALARM BELL
- PAV POTTER AIR VENT
- UPRIGHT SPRINKLER
- PENDENT SPRINKLER
- SIDEWALL SPRINKLER
- CONCEALED PENDENT SPRINKLER
- EXTENDED COVERAGE SPRINKLER
- D DRY PENDENT SPRINKLER

CONCEALED COVER PLATE NOTES

1. ACOUSTICAL CEILINGS WITH WHITE TILES SHALL HAVE WHITE CONCEALED COVER PLATES INSTALLED
2. ENTRY LOBBY CEILING WITH BRUSHED ALUMINUM FINISH SHALL HAVE BRUCHED CHROME FINISHED COVERPLATES
3. CORRIDOR CEILING WITH CUSTOM LIGHT GRAY COLORED FINISH TO HAVE CUSTOM COVER PLATE FROM VIKING SUPPLYNET TO MATCH. COLOR CODE TO BE PROVIDED
4. CORRIDOR WITH CUSTOM COLLEGE OF THE SEQUOIAS ORANGE TILES SHALL HAVE CUSTOM COVER PLATE FROM VIKING SUPPLYNET TO MATCH.
   RGB COLOR CODE
   BLUE= 0/84/164
   ORANGE 247/142/29
   GREEN 141/198/63

GENERAL DESIGN NOTES

1. ANY EXPOSED PIPING OR FITTINGS SUCH AS IN LECTURE HALL AND AT SKYLIGHT LOCATIONS SHALL BE PAINTED TO MATCH CEILING PAINT COLOR.
2. SKYLIGHT SPRINKLERS SHALL BE CHROME FINISHED
3. EXPOSED SPRINKLERS AT STAIRS AND UNDER STEEL GRATING SHALL BE CHROME FINISHED TO MATCH THE STAINLESS STEEL PIPING.
4. MECHANICAL SPACE PLAN EAST OF LECTURE HALL HAS A NON-COMBUSTIBLE CONCEALED SPACE ABOVE DECK. THIS AREA HAS BEEN OMMITTED FROM PROTECTION IN ACCORDACE WITH NFPA 13.
5. ALL SPRINKLERS IN LECTURE HALL CLOUD CEILINGS SHALL BE CENTERED BETWEEN CEILING TEES.
6. ALL ACT CEILIING CONCEALED SPRINKLERS SHALL BE CENTERED IN TILES.
7. SPRINKLERS HAVE BEEN OMITTED FROM EXTERIOR PROJECTIONS IN ACCORDANCE WITH NFPA 13 9.2.3.2
8. ALL CONCEALED SPACES HAVE BEEN OMITTED FROM PROTECTION IN ACCORDANCE WITH NFPA 13 AS THESE AREAS ARE OF NON-COMBUSTIBLE CONSTRUCTION AND NON-OCCUPIABLE.

IDENTIFICATION STAMP
DIV. OF THE STATE ARCHITECT
APP: 02-122821 INC: 2
REVIEWED FOR
SS ☑ FLS ☑ ACS ☑
DATE: 11/20/2025

Teter, Inc. expressly reserves its common law copyright and other property rights in these plans. This document, the ideas and designs incorporated herein, as an instrument of professional service, is not to be used in whole or part, for any other project without prior written authorization.

MARK	DATE	DESCRIPTION
A	11/13/2025	DSA BACKCHECK

TETER, LLP
FRESNO HEADQUARTERS
VISALIA | BAKERSFIELD | MODESTO | SAN LUIS OBISPO
ARCHITECTS ENGINEERS CONNECTED

VISALIA CAMPUS UNIVERSITY CENTER
COLLEGE OF THE SEQUOIAS
4999 E. BARDSLEY AVE.
TULARE, CA

DRAWING TITLE
FIRST FLOOR REFLECTED CEILING PLAN WEST

PROJECT NO.
22-12498

DRAWING
FP610.2

PLOT DATE: 9/22/2025 8:12:06 PM

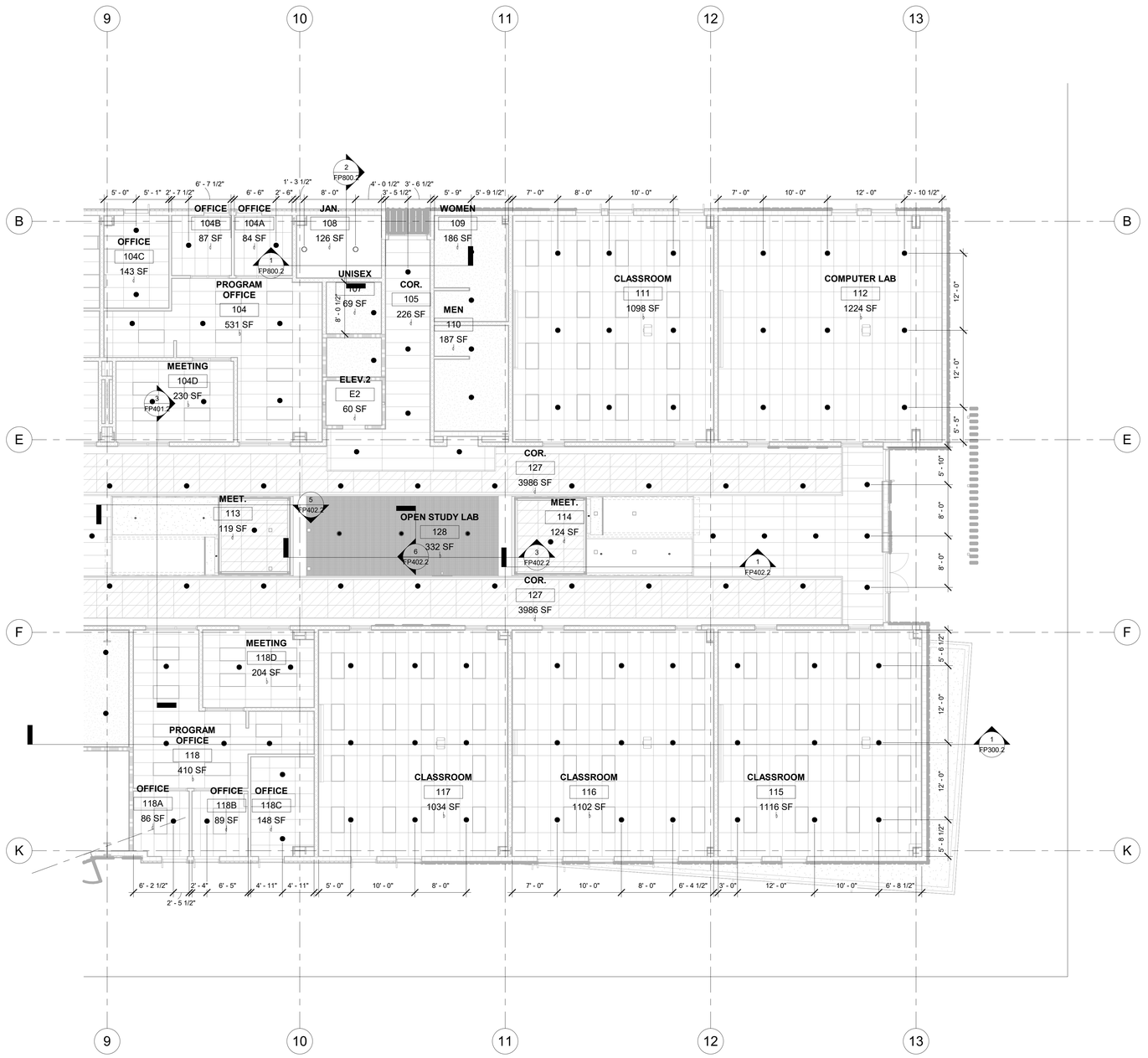

1 FIRST FLOOR EAST
1/8" = 1'-0"

0' 4' 8' 16'

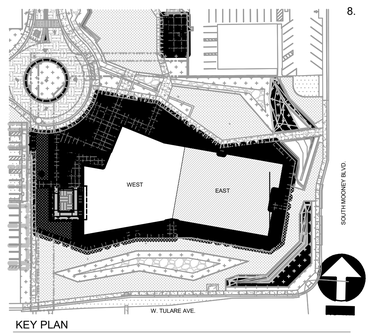

KEY PLAN

SYMBOLS LEGEND

- PIPE DIAMETER, CUT LENGTH, AND SECTION LENGTHS
- PIPE DIAMETER AND CUT LENGTH
- PIPE HANGER
- PIPE CHANGE IN ELEVATION
- LATERAL SWAY BRACE
- LONGITUDINAL SWAY BRACE
- 4-WAY SWAY BRACE
- TRAPEZE HANGER
- FLEX DROP
- HYDRAULIC NODE
- ALARM BELL
- PAV POTTER AIR VENT
- UPRIGHT SPRINKLER
- PENDENT SPRINKLER
- SIDEWALL SPRINKLER
- CONCEALED PENDENT SPRINKLER
- EXTENDED COVERAGE SPRINKLER
- DRY PENDENT SPRINKLER

CONCEALED COVER PLATE NOTES

1. ACOUSTICAL CEILINGS WITH WHITE TILES SHALL HAVE WHITE CONCEALED COVER PLATES INSTALLED
2. ENTRY LOBBY CEILING WITH BRUSHED ALUMINUM FINISH SHALL HAVE BRUCHED CHROME FINISHED COVERPLATES
3. CORRIDOR CEILING WITH CUSTOM LIGHT GRAY COLORED FINISH TO HAVE CUSTOM COVER PLATE FROM VIKING SUPPLYNET TO MATCH. COLOR CODE TO BE PROVIDED
4. CORRIDOR WITH CUSTOM COLLEGE OF THE SEQUOIAS ORANGE TILES SHALL HAVE CUSTOM COVER PLATE FROM VIKING SUPPLYNET TO MATCH.
   RGB COLOR CODE
   BLUE= 0/84/164
   ORANGE 247/142/29
   GREEN 141/198/63

GENERAL DESIGN NOTES

1. ANY EXPOSED PIPING OR FITTINGS SUCH AS IN LECTURE HALL AND AT SKYLIGHT LOCATIONS SHALL BE PAINTED TO MATCH CEILING PAINT COLOR.
2. SKYLIGHT SPRINKLERS SHALL BE CHROME FINISHED
3. EXPOSED SPRINKLERS AT STAIRS AND UNDER STEEL GRATING SHALL BE CHROME FINISHED TO MATCH THE STAINLESS STEEL PIPING.
4. MECHANICAL SPACE PLAN EAST OF LECTURE HALL HAS A NON-COMBUSTIBLE CONCEALED SPACE ABOVE DECK. THIS AREA HAS BEEN OMMITTED FROM PROTECTION IN ACCORDACE WITH NFPA 13.
5. ALL SPRINKLERS IN LECTURE HALL CLOUD CEILINGS SHALL BE CENTERED BETWEEN CEILING TEES.
6. ALL ACT CEILIING CONCEALED SPRINKLERS SHALL BE CENTERED IN TILES.
7. SPRINKLERS HAVE BEEN OMITTED FROM EXTERIOR PROJECTIONS IN ACCORDANCE WITH NFPA 13 9.2.3.2
8. ALL CONCEALED SPACES HAVE BEEN OMITTED FROM PROTECTION IN ACCORDANCE WITH NFPA 13 AS THESE AREAS ARE OF NON-COMBUSTIBLE CONSTRUCTION AND NON-OCCUPIABLE.

IDENTIFICATION STAMP
DIV. OF THE STATE ARCHITECT
APP: 02-122821 INC: 2
REVIEWED FOR
SS ☑ FLS ☑ ACS ☑
DATE: 11/20/2025

Teter, Inc. expressly reserves its common law copyright and other property rights in these plans. This document, the ideas and designs incorporated herein, as an instrument of professional service, is not to be used in whole or in part, for any other project, without prior written authorization.

MARK	DATE	DESCRIPTION
A.	11/13/2025	DSA BACKCHECK

TETER, LLP
FRESNO HEADQUARTERS
VISALIA | BAKERSFIELD | MODESTO | SAN LUIS OBISPO
ARCHITECTS ENGINEERS CONNECTED

VISALIA CAMPUS UNIVERSITY CENTER
COLLEGE OF THE SEQUOIAS
4999 E. BARDSLEY AVE.
TULARE, CA

DRAWING TITLE
FIRST FLOOR REFLECTED CEILING PLAN EAST

PROJECT NO.
22-12498

DRAWING
FP611.2

C:\Users\wacor\Box\Cordiner Consulting LLC\Projects 2023\23-023 - TET - New University Center Building\6_Submittals\1_Design\12498-FP-COS University Center 2024 DSA Backcheck.rvt
PLOT DATE: 9/22/2025 6:12:13 PM

C:\Users\sdonn\Box\Cordiner Consulting LLC\Projects 2023\23-023 - TET - New University Center Building\6_Submittals\1_Design\12498-FP-CCS University Center 2024 DSA Backcheck.rvt

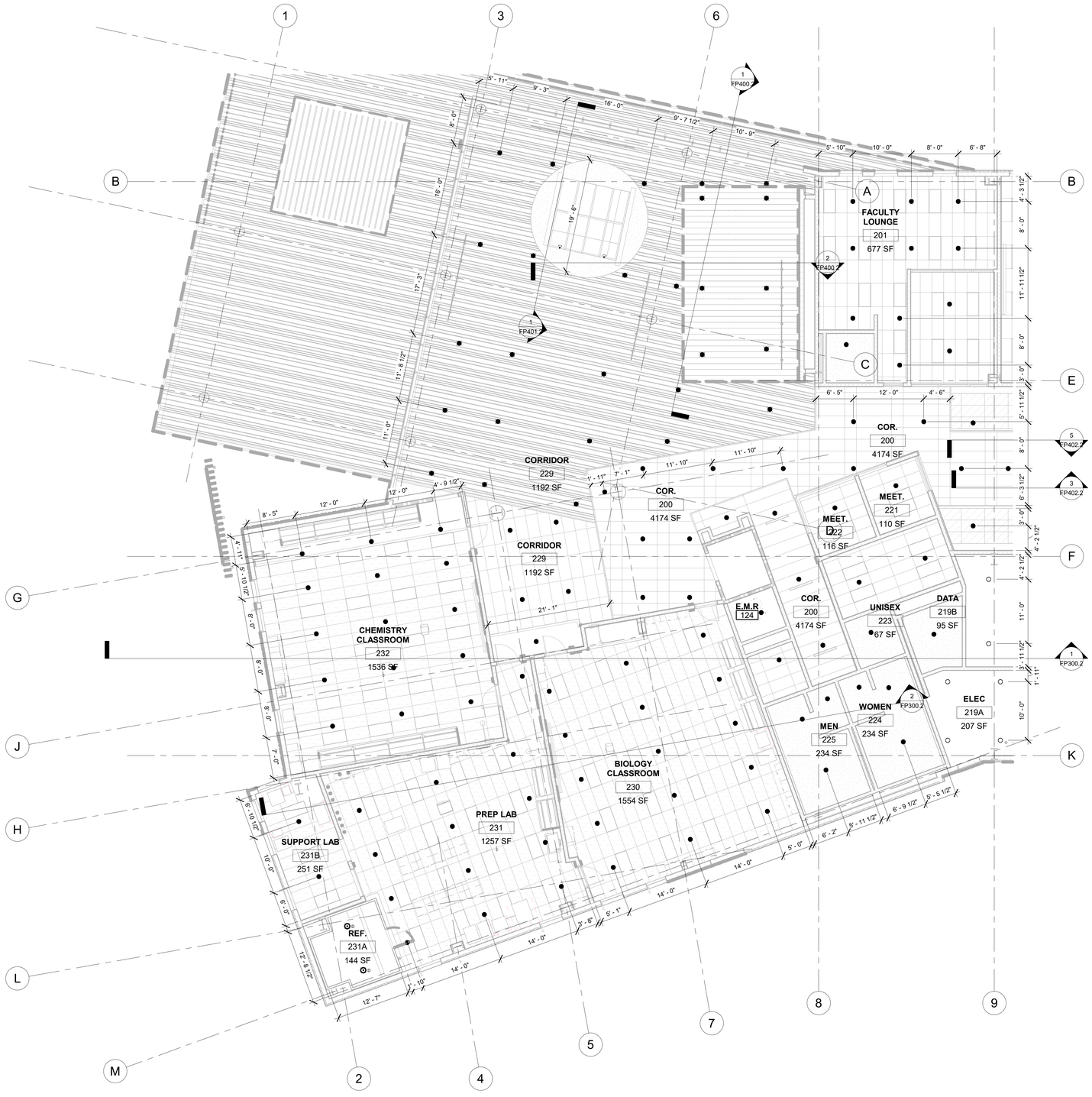

1 2ND FLOOR WEST
1/8" = 1'-0"

0' 4' 8' 16'

SYMBOLS LEGEND

- PIPE DIAMETER, CUT LENGTH, AND SECTION LENGTHS
- PIPE DIAMETER AND CUT LENGTH
- PIPE HANGER
- PIPE CHANGE IN ELEVATION
- LATERAL SWAY BRACE
- LONGITUDINAL SWAY BRACE
- 4-WAY SWAY BRACE
- TRAPEZE HANGER
- FLEX DROP
- HYDRAULIC NODE
- ALARM BELL
- PAV POTTER AIR VENT
- UPRIGHT SPRINKLER
- PENDENT SPRINKLER
- SIDEWALL SPRINKLER
- CONCEALED PENDENT SPRINKLER
- EXTENDED COVERAGE SPRINKLER
- DRY PENDENT SPRINKLER

CONCEALED COVER PLATE NOTES

1. ACOUSTICAL CEILINGS WITH WHITE TILES SHALL HAVE WHITE CONCEALED COVER PLATES INSTALLED
2. ENTRY LOBBY CEILING WITH BRUSHED ALUMINUM FINISH SHALL HAVE BRUCHED CHROME FINISHED COVERPLATES
3. CORRIDOR CEILING WITH CUSTOM LIGHT GRAY COLORED FINISH TO HAVE CUSTOM COVER PLATE FROM VIKING SUPPLYNET TO MATCH. COLOR CODE TO BE PROVIDED
4. CORRIDOR WITH CUSTOM COLLEGE OF THE SEQUOIAS ORANGE TILES SHALL HAVE CUSTOM COVER PLATE FROM VIKING SUPPLYNET TO MATCH.
   RGB COLOR CODE
   BLUE= 0/84/164
   ORANGE 247/142/29
   GREEN 141/198/63

GENERAL DESIGN NOTES

1. ANY EXPOSED PIPING OR FITTINGS SUCH AS IN LECTURE HALL AND AT SKYLIGHT LOCATIONS SHALL BE PAINTED TO MATCH CEILING PAINT COLOR.
2. SKYLIGHT SPRINKLERS SHALL BE CHROME FINISHED
3. EXPOSED SPRINKLERS AT STAIRS AND UNDER STEEL GRATING SHALL BE CHROME FINISHED TO MATCH THE STAINLESS STEEL PIPING.
4. MECHANICAL SPACE PLAN EAST OF LECTURE HALL HAS A NON-COMBUSTIBLE CONCEALED SPACE ABOVE DECK. THIS AREA HAS BEEN OMMITTED FROM PROTECTION IN ACCORDACE WITH NFPA 13.
5. ALL SPRINKLERS IN LECTURE HALL CLOUD CEILINGS SHALL BE CENTERED BETWEEN CEILING TEES.
6. ALL ACT CEILIING CONCEALED SPRINKLERS SHALL BE CENTERED IN TILES.
7. SPRINKLERS HAVE BEEN OMITTED FROM EXTERIOR PROJECTIONS IN ACCORDANCE WITH NFPA 13 9.2.3.2
8. ALL CONCEALED SPACES HAVE BEEN OMITTED FROM PROTECTION IN ACCORDANCE WITH NFPA 13 AS THESE AREAS ARE OF NON-COMBUSTIBLE CONSTRUCTION AND NON-OCCUPIABLE.

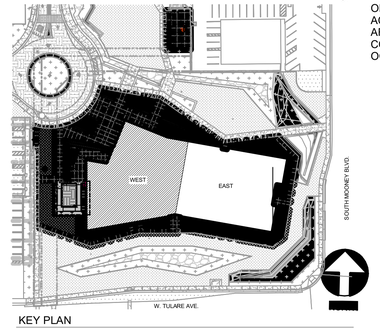

KEY PLAN

IDENTIFICATION STAMP
DIV. OF THE STATE ARCHITECT
APP: 02-122821 INC: 2
REVIEWED FOR
SS ☑ FLS ☑ ACS ☑
DATE: 11/20/2025

Teter, Inc. expressly reserves its common law copyright and other property rights in these plans. This document, the ideas and designs incorporated herein, as an instrument of professional service, is not to be used in whole or in part, for any other project without prior written authorization.

MARK	DATE	DESCRIPTION
A.	11/13/2025	DSA BACKCHECK

TETER, LLP
ARCHITECTS ENGINEERS CONNECTED
FRESNO HEADQUARTERS
VISALIA | BAKERSFIELD | MODESTO | SAN LUIS OBISPO

VISALIA CAMPUS UNIVERSITY CENTER
COLLEGE OF THE SEQUOIAS
4999 E. BARDSLEY AVE.
TULARE, CA

DRAWING TITLE
SECOND FLOOR REFLECTED CEILING PLAN WEST

PROJECT NO.
22-12498

DRAWING
FP620.2

PLOT DATE: 9/12/2025 11:10:44 AM

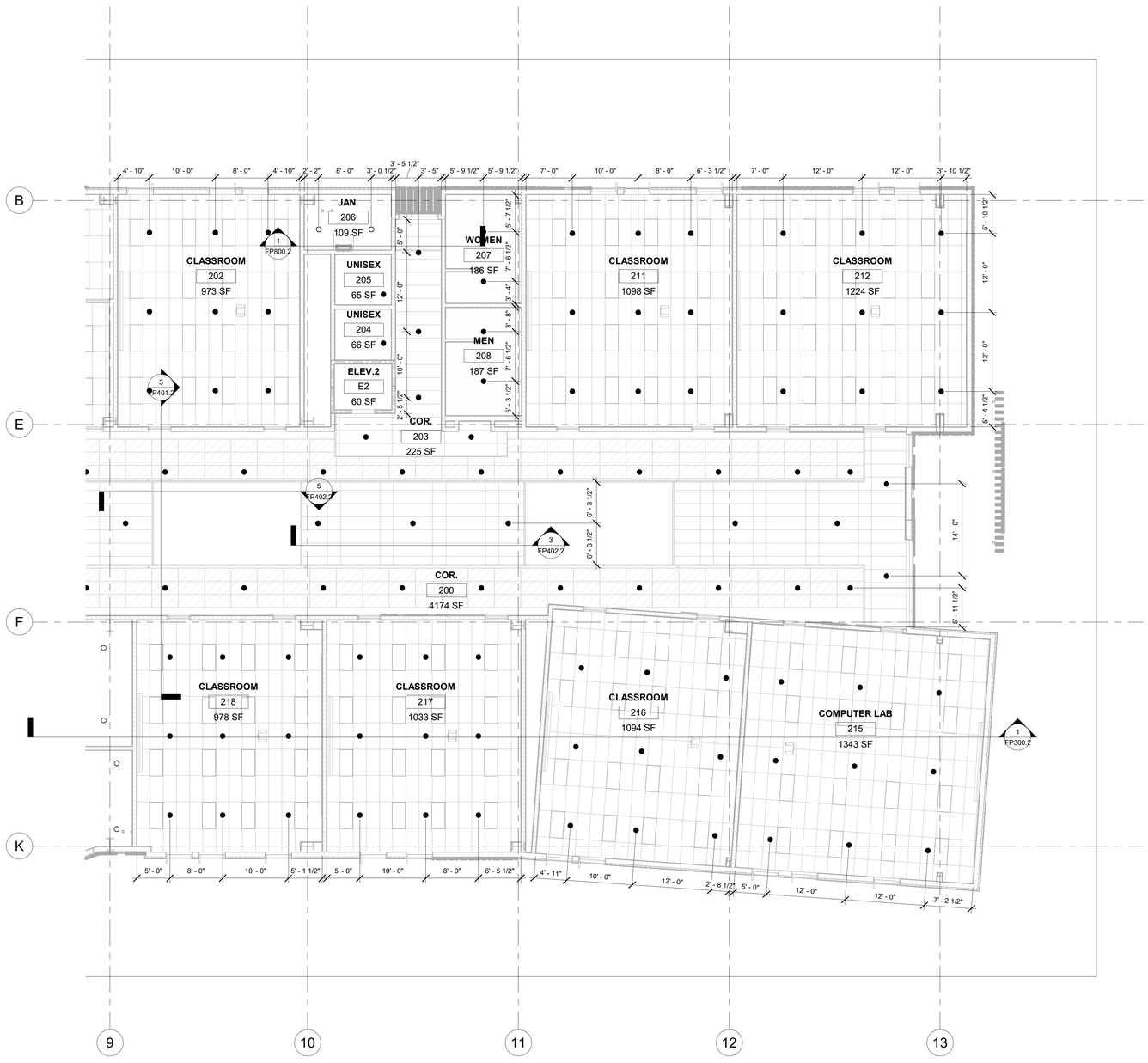

1 2ND FLOOR EAST
1/8" = 1'-0"

0' 4' 8' 16'

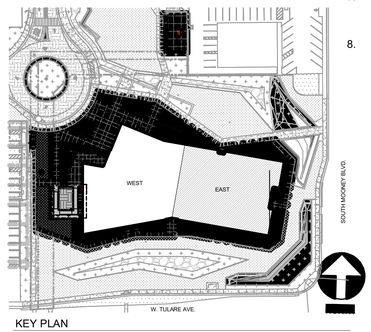

KEY PLAN

SYMBOLS LEGEND

- PIPE DIAMETER, CUT LENGTH, AND SECTION LENGTHS
- PIPE DIAMETER AND CUT LENGTH
- PIPE HANGER
- PIPE CHANGE IN ELEVATION
- LATERAL SWAY BRACE
- LONGITUDINAL SWAY BRACE
- 4-WAY SWAY BRACE
- TRAPEZE HANGER
- FLEX DROP
- HYDRAULIC NODE
- ALARM BELL
- PAV POTTER AIR VENT
- UPRIGHT SPRINKLER
- PENDENT SPRINKLER
- SIDEWALL SPRINKLER
- CONCEALED PENDENT SPRINKLER
- EXTENDED COVERAGE SPRINKLER
- DRY PENDENT SPRINKLER

CONCEALED COVER PLATE NOTES

1. ACOUSTICAL CEILINGS WITH WHITE TILES SHALL HAVE WHITE CONCEALED COVER PLATES INSTALLED
2. ENTRY LOBBY CEILING WITH BRUSHED ALUMINUM FINISH SHALL HAVE BRUCHED CHROME FINISHED COVERPLATES
3. CORRIDOR CEILING WITH CUSTOM LIGHT GRAY COLORED FINISH TO HAVE CUSTOM COVER PLATE FROM VIKING SUPPLYNET TO MATCH. COLOR CODE TO BE PROVIDED
4. CORRIDOR WITH CUSTOM COLLEGE OF THE SEQUOIAS ORANGE TILES SHALL HAVE CUSTOM COVER PLATE FROM VIKING SUPPLYNET TO MATCH.
RGB COLOR CODE
BLUE= 0/84/164
ORANGE 247/142/29
GREEN 141/198/63

GENERAL DESIGN NOTES

1. ANY EXPOSED PIPING OR FITTINGS SUCH AS IN LECTURE HALL AND AT SKYLIGHT LOCATIONS SHALL BE PAINTED TO MATCH CEILING PAINT COLOR.
2. SKYLIGHT SPRINKLERS SHALL BE CHROME FINISHED
3. EXPOSED SPRINKLERS AT STAIRS AND UNDER STEEL GRATING SHALL BE CHROME FINISHED TO MATCH THE STAINLESS STEEL PIPING.
4. MECHANICAL SPACE PLAN EAST OF LECTURE HALL HAS A NON-COMBUSTIBLE CONCEALED SPACE ABOVE DECK. THIS AREA HAS BEEN OMMITTED FROM PROTECTION IN ACCORDACE WITH NFPA 13.
5. ALL SPRINKLERS IN LECTURE HALL CLOUD CEILINGS SHALL BE CENTERED BETWEEN CEILING TEES.
6. ALL ACT CEILIING CONCEALED SPRINKLERS SHALL BE CENTERED IN TILES.
7. SPRINKLERS HAVE BEEN OMITTED FROM EXTERIOR PROJECTIONS IN ACCORDANCE WITH NFPA 13 9.2.3.2
8. ALL CONCEALED SPACES HAVE BEEN OMITTED FROM PROTECTION IN ACCORDANCE WITH NFPA 13 AS THESE AREAS ARE OF NON-COMBUSTIBLE CONSTRUCTION AND NON-OCCUPIABLE.

IDENTIFICATION STAMP
DIV. OF THE STATE ARCHITECT
APP: 02-122821 INC: 2
REVIEWED FOR
SS ☑ FLS ☑ ACS ☑
DATE: 11/20/2025

Teter, Inc. expressly reserves its common law copyright and other property rights in these plans. This document, the ideas and designs incorporated herein, as an instrument of professional service, is not to be used in whole or in part, for any other project without prior written authorization.

MARK	DATE	DESCRIPTION
A.	11/13/2025	DSA BACKCHECK

TETER, LLP
FRESNO HEADQUARTERS
VISALIA | BAKERSFIELD | MODESTO | SAN LUIS OBISPO
ARCHITECTS ENGINEERS CONNECTED

VISALIA CAMPUS UNIVERSITY CENTER
COLLEGE OF THE SEQUOIAS
4999 E. BARDSLEY AVE.
TULARE, CA

DRAWING TITLE
SECOND FLOOR REFLECTED CEILING PLAN EAST

PROJECT NO.
22-12498

DRAWING
FP621.2

C:\Users\sonni\Box\Cordiner Consulting LLC\Projects 2023\23-023 - TET - New University Center Building\6_Submittals_Design\12498-FP-COS University Center 2024 DSA Backcheck.rvt

PLOT DATE: 9/12/2025 11:10:46 AM

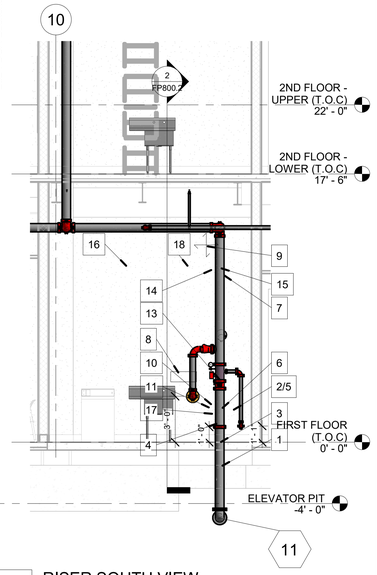

1 RISER SOUTH VIEW
1/4" = 1'-0"

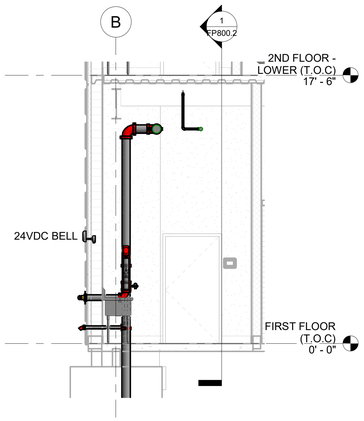

2 RISER SECTION WEST VIEW
1/4" = 1'-0"

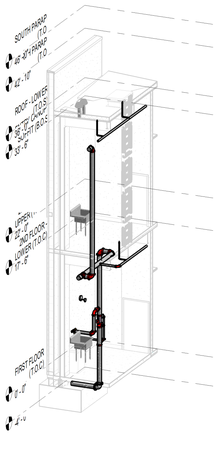

3 RISER ROOM ISOMETRIC

1. POINT OF CONNECTION 1'-0 AFF - 6" FLEXIBLE COUPLING
2. 2" MAIN DRAIN PIPING - THREADED BLACK STEEL SCHEDULE 40
3. 6" RISER PIPING - GROOVED BLACK STEEL SCHEDULE 10
4. SUPERVISED CONTROL VALVE - GROOVED
5. 2" TEST AND DRAIN
6. VIKING COMMERCIAL RISER ASSEMBLY
7. 6" GROOVED FLEXIBLE COUPLING
8. SPARE SPRINKLER BOX - MOUNTED ON EXTERIOR WALL OF EACH RISER ROOM - SHALL CONTAIN (6) SPARE SPRINKLERS (3) OF EACH TYPE AND COMPATIBLE WRENCHES FOR BUILDINGS D & E - (12) SPARE SPRINKLERS (3) OF EACH TYPE AND COMPATIBLE WRENCHES FOR BUILDING F.
9. 4-WAY SWAY BRACE - ATTACHED TO WALL STRUCTURE - REFER TO 4-WAY SWAY BRACE DETAIL
10. 0-300 PSI GAUGE - 1/4" NPS
11. 1/4" NPS GAUGE ISOLATION VALVE
12. 120VAC ELECTRIC WATERFLOW BELL TO BE INSTALLED ON EXTERIOR WALL
13. HYDRAULIC PLACARD AND GENERAL INFORMATION SIGN PER NFPA 13 25.5 & 25.6
14. 6" GROOVED RIGID COUPLING
15. 6" GROOVED 90° ELBOW
16. 6" CROSS MAIN TO SYSTEM
17. 6" VANE TYPE WATERFLOW SWITCH
18. HANGER WITHING 24" OF RISER

4 SYSTEM RISER KEY NOTES
N.T.S.

- **WET SYSTEM RISERS SHALL BE A 6" VIKING COMMERCIAL EASY RISER CONTROL ASSEMBLY WITH SUPERVISED CONTROL VALVE.**
- **FDC IS A REMOTE FREE STANDING FDC. REFER TO CIVIL PLANS FOR INSTALLATION LOCATION.**
- **SUPERVISED CONTROL VALVES AND VANE STYLE WATERFLOW SWITCH SHALL ALL BE SUPERVISED BY THE BASE BUILDING FIRE ALARM SYSTEM**
-
- **A 24VDC ALARM BELL SHALL BE INSTALLED ON THE EXTERIOR WALL OF THE RISER LOCATION**
- **SYSTEM INSPECTOR'S TEST AND DRAIN IS ATTACHED TO THE RISER AND SHALL BE PIPED TO THE EXTERIOR OF THE BUILDING VIA A 2" MAIN DRAIN. THIS SHALL TERMINATE OVER A SPLASH BLOCK WITH A 1/2" OUTLET COMPLETED WITH A 1/2" SMOOTH OUTLET (BROKEN SPRINKLER).**

5 RISER NOTES

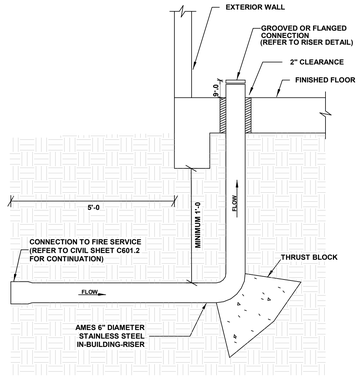

6 AMES STAINLESS STEEL IN-BUILDING RISER
N.T.S

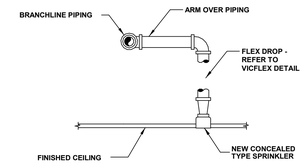

ALL PENDENT AND CONCEALED PENDENTS ON PROJECT SHALL BE INSTALLED USING 31" VIC FLEX FLEXIBLE SPRINKLER DROPS.

TYPICAL PENDANT SPRINKLER HEAD INSTALLATION DETAIL
N.T.S.

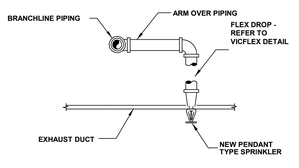

* COORDINATE EXHAUST DUCT PENETRATION WITH MECHANICAL CONTRACTOR *

TYPICAL EXHAUST DUCT PENDANT SPRINKLER INSTALLATION DETAIL
N.T.S.

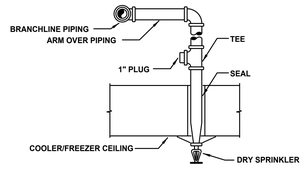

TYPICAL SEMI-RECESSED PENDANT DRY SPRINKLER INSTALLATION DETAIL
N.T.S.

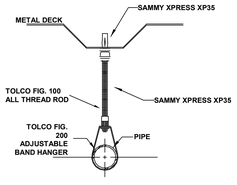

NOTE: DETAIL SHOWN IS FOR 1" ARM OVERS ONLY. FOR ALL OTHER PIPE SIZES SEE DETAIL BELOW

MAXIMUM SUSPENDED LOAD BASED ON STRUCTURAL REQUIREMENTS IS 30LBS.

SYMBOL ON PLANS

SAMMY X-PRESS XP35 - 1-1/2" AND GREATER
N.T.S.

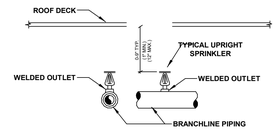

NOTE:
NFPA 13 2016 EDITION 8.6.4.2
8.6.4.2.1 UNLESS THE REQUIREMENTS OF 8.6.4.2.2 OR 8.6.4.2.3 ARE MET, DEFLECTORS OF SPRINKLERS SHALL BE ALIGNED PARALLEL TO CEILINGS, ROOFS, HIPS, OR THE INCLINE OF STAIRS.
8.6.4.2.2 WHERE SPRINKLERS ARE INSTALLED IN THE PEAK BELOW ASLOPED CEILING OR ROOF SURFACE, THE SPRINKLER SHALL BE INSTALLEDWITH THE DEFLECTOR HORIZONTAL.
8.6.4.2.3 ROOFS HAVING A PITCH NOT EXCEEDING 2 IN 12(16.7 PERCENT) ARE CONSIDERED HORIZONTAL IN THE APPLICATION OF 8.6.4.2, AND SPRINKLERS SHALL BE PERMITTED TO BE INSTALLED WITHDEFLECTORS HORIZONTAL.

UPRIGHT SPRINKLER ON BRANCHLINE DETAIL
N.T.S.

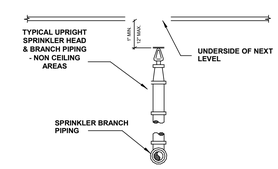

NOTE:
NFPA 13 2016 EDITION 8.6.4.2
8.6.4.2.1 UNLESS THE REQUIREMENTS OF 8.6.4.2.2 OR 8.6.4.2.3 ARE MET, DEFLECTORS OF SPRINKLERS SHALL BE ALIGNED PARALLEL TO CEILINGS, ROOFS, HIPS, OR THE INCLINE OF STAIRS.
8.6.4.2.2 WHERE SPRINKLERS ARE INSTALLED IN THE PEAK BELOW ASLOPED CEILING OR ROOF SURFACE, THE SPRINKLER SHALL BE INSTALLEDWITH THE DEFLECTOR HORIZONTAL.
8.6.4.2.3 ROOFS HAVING A PITCH NOT EXCEEDING 2 IN 12(16.7 PERCENT) ARE CONSIDERED HORIZONTAL IN THE APPLICATION OF 8.6.4.2, AND SPRINKLERS SHALL BE PERMITTED TO BE INSTALLED WITHDEFLECTORS HORIZONTAL.

TYPICAL UPRIGHT SPRINKLER INSTALLATION DETAIL
N.T.S.

** WHERE HANGERS OR BRACING ANCHORS/CLAMPS ARE INSTALLED ON THE BOTTOM FLANGE OF A BEAM, BOTTOM FLANGE BRACING ON ONE SIDE OF THE CLAMP MUST BE INSTALLED. **

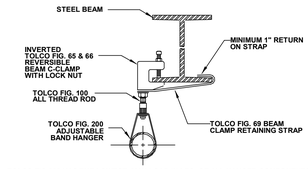

TOLCO FIG 200 HAS THE LOWEST MAX LOAD IN LBS. OF ALL HANGER COMPONENTS. THE TABLE BELOW REFLECTS THE MAXIMUM WEIGHT IN LBS. FOR THESE HANGERS.

1"	400
1-1/2"	400
2"	400
4"	1000

REVERSIBLE BEAM C-CLAMP WITH RETAINING STRAP (BEAM)
N.T.S.

SYMBOL FOR BEAM CLAMP IS CONSISTANT THROUGHOUT. REFER TO "TOP BEAM C-CLAMP" DETAIL.

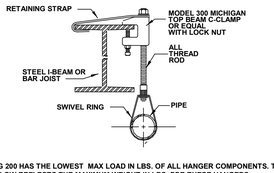

TOLCO FIG 200 HAS THE LOWEST MAX LOAD IN LBS. OF ALL HANGER COMPONENTS. THE TABLE BELOW REFLECTS THE MAXIMUM WEIGHT IN LBS. FOR THESE HANGERS.

1"	400
1-1/2"	400
2"	400
4"	1000

TOP BEAM C-CLAMP WITH RETAINING STRAP (BEAM)
N.T.S.

SYMBOL ON PLANS

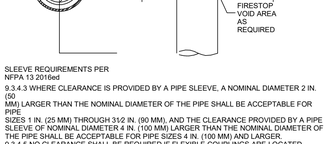

SLEEVE REQUIREMENTS PER NFPA 13 2016ed
9.3.4.3 WHERE CLEARANCE IS PROVIDED BY A PIPE SLEEVE, A NOMINAL DIAMETER 2 IN. (50
(50) MM) LARGER THAN THE NOMINAL DIAMETER OF THE PIPE SHALL BE ACCEPTABLE FOR PIPE
SIZES 1 IN. (25 MM) THROUGH 31⁄2 IN. (90 MM), AND THE CLEARANCE PROVIDED BY A PIPE SLEEVE OF NOMINAL DIAMETER 4 IN. (100 MM) LARGER THAN THE NOMINAL DIAMETER OF THE PIPE SHALL BE ACCEPTABLE FOR PIPE SIZES 4 IN. (100 MM) AND LARGER.
9.3.4.5 NO CLEARANCE SHALL BE REQUIRED IF FLEXIBLE COUPLINGS ARE LOCATED WITHIN
1 FT (300 MM) OF EACH SIDE OF A WALL OR IF THE REQUIREMENTS OF 9.3.2.3.1(2) ARE MET.

TYPICAL SLEEVE PENETRATION INSTALLATION DETAIL AND REQUIREMENTS
N.T.S.

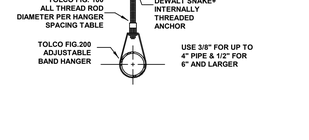

DRILLED SHALLOW CONCRETE ANCHOR
N.T.S.

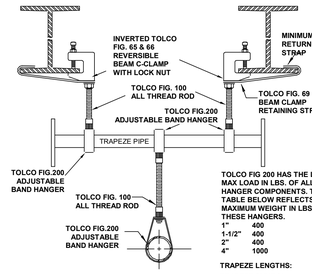

TOLCO FIG 200 HAS THE LOWEST MAX LOAD IN LBS. OF ALL HANGER COMPONENTS. THE TABLE BELOW REFLECTS THE MAXIMUM WEIGHT IN LBS. FOR THESE HANGERS.

1"	400
1-1/2"	400
2"	400
4"	1000

TRAPEZE LENGTHS:

TRAPEZE SYMBOL:
- 4" SCH 10 AT 6'-0
- MODULUS = 0.51
- MINIMUM TRAPEZE PIPE IS 2" SCH 40

REVERSIBLE BEAM C-CLAMP WITH PIPE TRAPEZE HANGER
N.T.S.

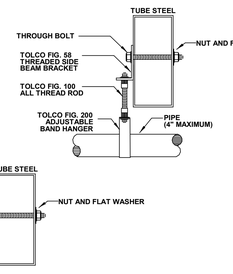

HSS HANGING AND BRACING ATTACHMENT TO STEEL
N.T.S.

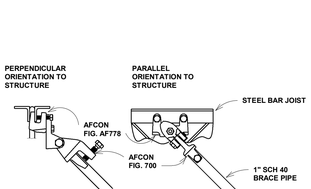

AFCON FIG 700 / 775 ATTACHMENT TO STEEL BEAM FLANGE
N.T.S.

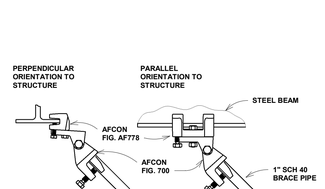

AFCON FIG 700 / 775 ATTACHMENT TO STEEL BAR JOIST
N.T.S.

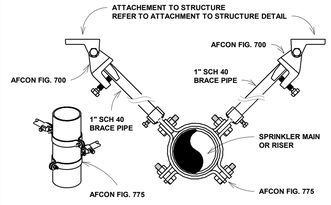

AFCON FIG 700 / 775 4-WAY SWAY BRACE ATTACHMENT
N.T.S.

TABLE 9.2.2 1(a) MAXIMUM DISTANCE BETWEEN HANGERS (FT-IN.)

NOMINAL PIPE SIZE	3/4"	1"	1-1/4"	1-1/2"	2"	2-1/2"	3"	4"	6"	8"
STEEL PIPE	N/A	12-0	12-0	15-0	15-0	15-0	15-0	15-0	15-0	15-0
THREADED LIGHTWALL	N/A	12-0	12-0	12-0	12-0	12-0	12-0	N/A	N/A	N/A
COPPER TUBE	8-0	8-0	10-0	12-0	12-0	12-0	12-0	N/A	N/A	N/A
CPVC	5-6	6-0	6-6	7-0	8-0	9-0	N/A	N/A	N/A	N/A

FIGURE A 9.2.3.2.2 DISTANCE FROM SPRINKLER TO HANGER

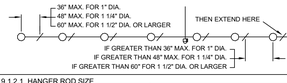

TABLE 9.1.2.1 HANGER ROD SIZE

PIPE SIZE	DIAMETER OF ROD	PIPE SIZE	DIAMETER OF ROD
UP TO AND INCLUDING 4"	3/8"	6" AND 8"	1/2"

NFPA HANGER SPACING TABLE
N.T.S.

Install a ball valve in line with the PAV to assist in servicing the strainer without disabling the sprinkler system.

1. Read and understand the instructions provided before you proceed with installation. The PAV shall be installed in accordance with local ordinances and the applicable NFPA13 standard.

2. The Engineer of Record should select the Model PAV, Potter Air Vent installation location. Usually at a point in the system that will vent the most air. Refer to piping plans for location.

3. The location of the PAV must not interfere with the spray pattern of any sprinkler head. The connection point must be off the top of the pipe. (See Fig. 1)

4. The piping must be level or pitch back toward the fire sprinkler system piping and arranged in such a manner that water will not become trapped. The outlet of the PAV contains a 1/2" male NPT threaded connection allowing the device to be piped to a drain or other suitable location if there are concerns about inadvertent water discharge.

5. Immediately after installation and filling of the fire sprinkler system, the PAV should be inspected for leaks and proper operation. The unit should be inspected periodically. Thereafter the manufacturer recommends quarterly or more frequently.

6. Inspection should include removal and cleaning of the strainer screen. Remove the screen and flush with clean water. Use a wire brush if necessary to remove any particles trapped in the screen.

PAV and Shutoff Valve Replacement

The vent used in the PAV is not field replaceable. If the vent should fail, the entire unit must be replaced.

PAV Outline Drawing

Fig 1

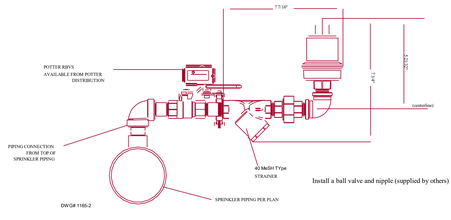

AIR VENT DETAIL
N.T.S.

LATERAL SWAY BRACE ATTACHMENT
N.T.S.

SYMBOL ON PLANS

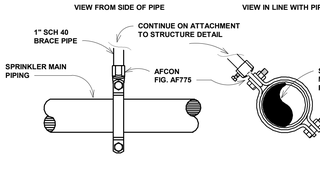

LONGITUDINAL SWAY BRACE ATTACHMENT
N.T.S.

SYMBOL ON PLANS

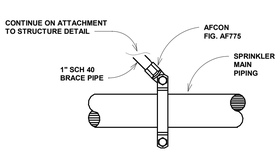

PLOT DATE: 9/12/2025 11:10:51 AM

C:\Users\sdonn\Box\Cordiner Consulting LLC\Projects 2023\23-023 - TET - New University Center Building\6_Submittals\1_Design\12498-FP-CCS University Center 2024 DSA Backcheck.rvt

IDENTIFICATION STAMP
DIV. OF THE STATE ARCHITECT
APP: 02-122821 INC: 2
REVIEWED FOR
SS ☑ FLS ☑ ACS ☑
DATE: 11/20/2025

Teter, Inc. expressly reserves its common law copyright and other property rights in these plans. This document, the ideas and designs incorporated herein, as an instrument of professional service, is not to be used in whole or in part, for any other project without prior written authorization.

MARK	DATE	DESCRIPTION
A	11/13/2025	DSA BACKCHECK

TETER, LLP
FRESNO HEADQUARTERS
VISALIA | BAKERSFIELD | MODESTO | SAN LUIS OBISPO
ARCHITECTS ENGINEERS CONNECTED

VISALIA CAMPUS UNIVERSITY CENTER
COLLEGE OF THE SEQUOIAS
4999 E. BARDSLEY AVE.
TULARE, CA

PROJECT NO.
22-12498

DRAWING TITLE
DETAILS

DRAWING
FP800.2

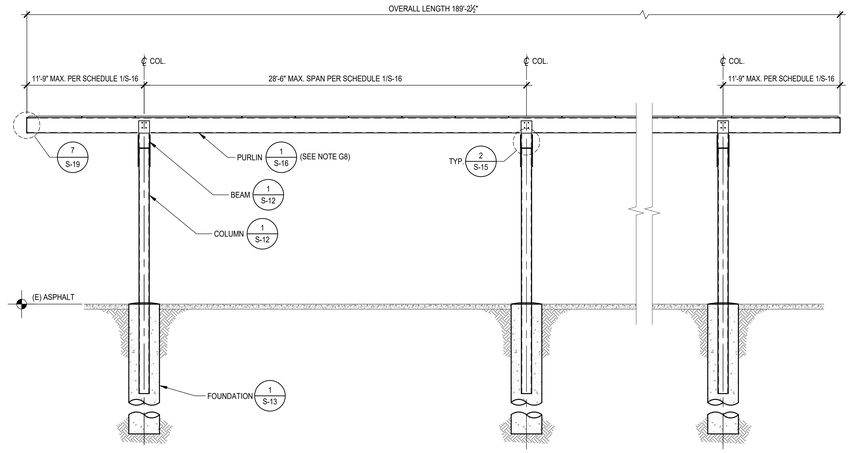

3 OT-STRUCTURE TYPICAL SIDE ELEVATION
SIMPLE-SPAN 1/4" = 1'-0"

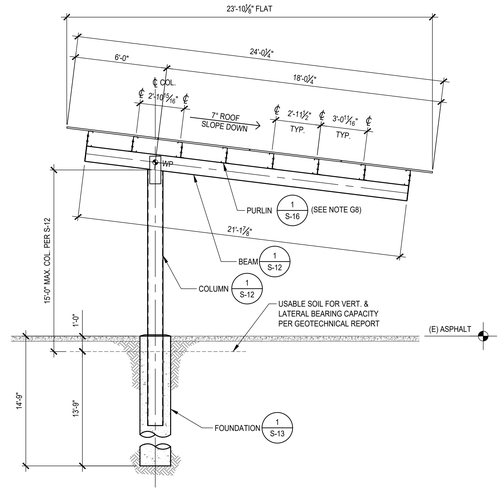

2 OT-STRUCTURE END ELEVATION
SIMPLE-SPAN 1/4" = 1'-0"

GENERAL NOTES

REFERS TO ULTIMATE GUARDIAN 22.1.1 PC: A# 04-123080

G1. FOR DETAILS, REFER TO 1/S-11 2/S-11 4/S-11

G2. MIN. 4,000 psi CONCRETE WITH TYPE II CEMENT.

G3. OT-STRUCTURE SOILS CLASS W PER SCHEDULE ON S-3.

G4. STEEL SHALL BE ORDERED AND INSTALLED BASED ON THE SLOPED DIMENSIONS, NOT THE FLAT DIMENSIONS.

G5. SOLAR PANEL ATTACHMENT PER DETAILS ON SHEET S-18.

G6. STRUCTURES SHALL BE CONSTRUCTED TO 10'-0" MIN. CLR.

G7. N/A

G8. ALL PURLINS TO BE CS12 x 3.5 x 0.071 (14GA).

G9. N/A

G10. USE PC I.D. # OT-110

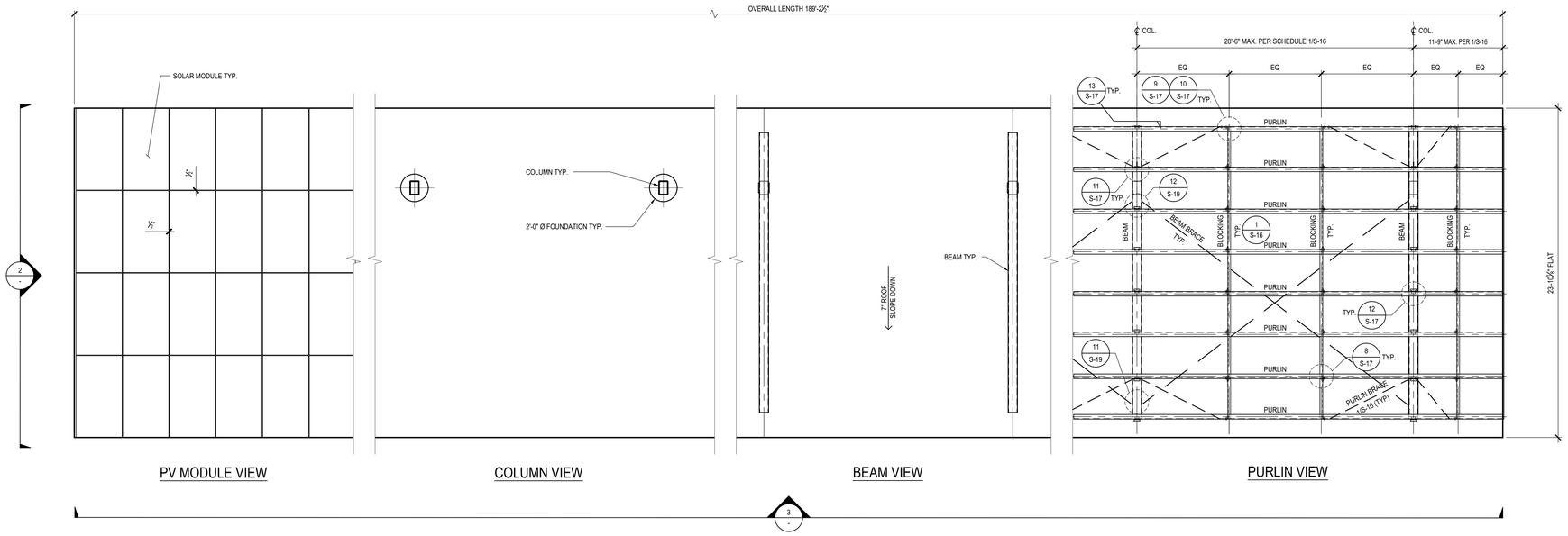

1 OT-STRUCTURE FRAMING PLAN
SIMPLE-SPAN 1/4" = 1'-0"

IDENTIFICATION STAMP
DIV. OF THE STATE ARCHITECT
APP: 02-122821 INC: 2
REVIEWED FOR
SS ☑ FLS ☑ ACS ☑
DATE: 11/20/2025

Teter, Inc. expressly reserves its common law copyright and other property rights in these plans. This document, the ideas and designs incorporated herein, as an instrument of professional service, is not to be used in whole or in part, for any other project without prior written authorization.

MARK	DATE	DESCRIPTION
A	11/13/2025	DSA BACKCHECK

REGISTERED PROFESSIONAL ENGINEER
CHRISTIN K. ROSEPINK
S 5885
STATE OF CALIFORNIA

TETER, INC.
FRESNO HEADQUARTERS
VISALIA | BAKERSFIELD | MODESTO | SAN LUIS OBISPO
ARCHITECTS ENGINEERS CONNECTED

VISALIA CAMPUS UNIVERSITY CENTER
COLLEGE OF THE SEQUOIAS
915 S. MOONEY BLVD
VISALIA, CALIFORNIA

DRAWING TITLE
4 PANEL OT-STRUCTURE SIMPLE-SPAN SITE SPECIFIC

PROJECT NO.
25-1013

DRAWING
S2.1

IDENTIFICATION STAMP
DIV. OF THE STATE ARCHITECT
APP: 02-122821 INC: 2
REVIEWED FOR
SS ☑ FLS ☑ ACS ☑
DATE: 11/20/2025

ULTIMATE GUARDIAN 22.1.1 - LOW WIND & LOW SEISMIC

PHOTOVOLTAIC SUPPORT STRUCTURES



THE ULTIMATE GUARDIAN IS THE SUPREME SOLAR PC ON THE MARKET WITH OVER 15,000,000 COMBINATIONS & CALCULATIONS RUN!

PC OWNERSHIP

4 STEEL ENGINEERING

26030 ACERO
MISSION VIEJO, CA 92691

PHONE: (949) 305-1150
FAX: (949) 305-1420

STRUCTURAL ENGINEER OF RECORD:
DUSTIN K. ROSEPINK, S5885

POINT OF CONTACT:
GARY MILLS, DIRECTOR OF ENGINEERING

M BAR C CONSTRUCTION INC.

1770 LA COSTA MEADOWS DR,
SAN MARCOS, CA 92078

LIC # 869960
B AND C51

POINT OF CONTACT:
ERIK KRIVOKOPICH

PHONE: (760) 744-4131
FAX: (760) 744-4449

STANDARD NOTES FOR PC USE

- 4 S.T.E.L. ENGINEERING, INC. SHALL ALWAYS BE GIVEN THE OPPORTUNITY TO BID THE DSA SUBMITTAL PACKAGE (I.E. TO ACT AS THE DESIGN PROFESSIONAL IN GENERAL RESPONSIBLE CHARGE).
- 4 S.T.E.L. ENGINEERING, INC. SHALL ALWAYS BE THE SEOR FOR ALL PROJECTS UTILIZING THE PC, NO OTHER FIRM IS ALLOWED TO PERFORM THIS SERVICE WITH THIS PC.
- M BAR C CONSTRUCTION, INC. SHALL ALWAYS BE THE STEEL CONTRACTOR FOR THE STEEL CANOPIES (PURLINS, BEAMS, COLUMNS, FOUNDATIONS, AND ASSOCIATED CONNECTIONS). NO OTHER CONTRACTOR IS ALLOWED TO PERFORM THIS SCOPE OF WORK WITH THIS PC.
- FOR CONSTRUCTION COST INFORMATION, CONTACT M BAR C CONSTRUCTION, INC.
- CUSTOM SIZES AND LOADING REQUIRE SUPPLEMENTARY SHOP DRAWINGS AND CALCULATIONS.

LEGAL NOTES

- USE OF PC WITHOUT WRITTEN CONSENT FROM 4 S.T.E.L. ENGINEERING, INC. AND/OR M BAR C CONSTRUCTION, INC. IS STRICTLY PROHIBITED.
- ALL INFORMATION HEREIN IS PROPRIETARY INFORMATION AND UNDER THE OWNERSHIP OF 4 S.T.E.L. ENGINEERING, INC & M BAR C CONSTRUCTION, INC.
- ALL INFORMATION COPYRIGHT 2009, 2011 & 2014.

DESIGN PARAMETER NOTES

1. REFER TO SHEET S-2 FOR 'DESIGN CHECK LIST' AND 'SITE SPECIFIC PARAMETERS'.
2. WHEN A SITE-SPECIFIC PROJECT IS LOCATED IN A FLOOD ZONE OTHER THAN ZONE X, A LETTER STAMPED FROM A GEOTECHNICAL ENGINEER IS REQUIRED IS NEEDED TO VALIDATE THE ALLOWABLE SOIL VALUES SPECIFIED IN THE PC DRAWINGS ARE STILL APPLICABLE. UNLESS THE BOTTOMS OF FOUNDATIONS ARE RAISED ABOVE THE DESIGN FLOOD ELEVATION, A VALIDATION LETTER FROM THE GEOTECHNICAL ENGINEER SHALL BE PROVIDED, EVEN IF THE PRESUMPTIVE LOAD BEARING VALUES PER CBC SECTION 1806A.2 ARE USED.
   EXCEPTION: WHEN A SITE-SPECIFIC PROJECT IS LOCATED IN A FLOOD ZONE D (UNDEFINED) AND THE APPLICANT PROVIDES EVIDENCE FROM THE LOCAL JURISDICTION OR A QUALIFIED DESIGN PROFESSIONAL CONFIRMING THE SITE IS NOT IN A FLOOD HAZARD ZONE.
3. WET STAMPED & SIGNED COPIES OF PC PLANS ARE NOT REQUIRED FOR SITE SPECIFIC PC USE.
4. CHANGES TO PC DOCUMENTS ARE GOVERNED BY DSA PL 07-02, SECTION 5. INCONSEQUENTIAL CHANGES MAY BE MADE TO THE EXTENT THAT THEY CAN BE REVIEWED WITHIN THE TWO-HOUR OTC TIME FRAME. CHANGES TO CODE-REGULATED ASPECTS TO PC DOCUMENTS ARE NOT PERMITTED AND SHALL BE SUBMITTED AND REVIEWED THROUGH THE REGULAR PLAN REVIEW PROCESS.
5. THE SITE SPECIFIC DESIGN PROFESSIONAL IN GENERAL RESPONSIBLE CHARGE IS RESPONSIBLE FOR ENSURING ALL INFORMATION SHOWN IN THE DESIGN PARAMETER CHECKLIST ARE MET AND PROVIDED AT THE TIME OF DSA SUBMITTAL.
6. THE SITE SPECIFIC DESIGN PROFESSIONAL IS RESPONSIBLE FOR OBTAINING A STATEMENT FROM THE PC DESIGN PROFESSIONAL REGARDING THE SOLAR PANEL ADEQUACY. SEE NOTES 12 AND 13 OF THE SOLAR PANEL AND SOLAR PANEL CONNECTION NOTES ON S-3 FOR INFORMATION REGARDING OBTAINING THIS STATEMENT.
7. THE SITE SPECIFIC DESIGN PROFESSIONAL IN GENERAL RESPONSIBLE CHARGE IS RESPONSIBLE FOR ENSURING 4 S.T.E.L. ENGINEERING, INC. HAS BEEN PROPERLY CONTRACTED TO PERFORM THE ROLE AS SEOR. NO OTHER FIRM SHALL PERFORM THE SEOR ROLE. 4 S.T.E.L. ENGINEERING, INC./DUSTIN ROSEPINK SHALL ONLY ACT AS THE SEOR IF PROPERLY CONTRACTED.
8. 4 S.T.E.L. ENGINEERING, INC./DUSTIN ROSEPINK WILL NOT SIGN ANY DSA FORMS (I.E. DSA-5, DSA-6, ETC.), REVIEW OR APPROVE ANY SUBMITTALS (I.E. GEOTECHNICAL REPORTS, CONCRETE MIX DESIGNS, SHOP DRAWINGS, ETC.) FOR THE SITE SPECIFIC PROJECT UNLESS HE IS ACTING AS THE DESIGN PROFESSIONAL IN GENERAL RESPONSIBLE CHARGE OR THE SITE SPECIFIC STRUCTURAL ENGINEER OF RECORD PER NOTE 3 ABOVE.

SHEET INDEX

- ☑ S-1 ..... COVER SHEET 1
- ☑ S-2 ..... COVER SHEET 2
- ☑ S-3 ..... GENERAL NOTES
- ☑ S-4 ..... SAMPLE DSA-103 FORMS
- ☑ S-5 ..... SECTION PROPERTIES & REBAR DETAILS
- ☐ S-6 ..... ~~T-STRUCTURE FRAMING PLAN & ELEVATIONS~~
- ☐ S-7 ..... ~~T-STRUCTURE BEAM/COLUMN SCHEDULE~~
- ☐ S-8 ..... ~~T-STRUCTURE PIER FOUNDATION SCHEDULE~~
- ☐ S-9 ..... ~~T-STRUCTURE SPREAD FOOTING SCHEDULE~~
- ☐ S-10 ..... ~~T-STRUCTURE BEAM-TO-COLUMN SCHEDULE~~
- ☑ S-11 ..... OT-STRUCTURE FRAMING PLAN & ELEVATIONS
- ☑ S-12 ..... OT-STRUCTURE BEAM/COLUMN SCHEDULE
- ☑ S-13 ..... OT-STRUCTURE PIER FOUNDATION SCHEDULE
- ☐ S-14 ..... ~~OT-STRUCTURE SPREAD FOOTING SCHEDULE~~
- ☑ S-15 ..... OT-STRUCTURE BEAM-TO-COLUMN SCHEDULE
- ☑ S-16 ..... PURLIN SCHEDULE
- ☑ S-17 ..... TYPICAL PURLIN DETAILS
- ☑ S-18 ..... TYPICAL SOLAR PANEL DETAILS
- ☑ S-19 ..... BEAM BRACING & MISC. DETAILS
- ☑ S-20 ..... EQUIPMENT COLUMN CONNECTIONS
- ☑ S-21 ..... FOUNDATION MISC. DETAILS
- ☐ S-22 ..... ~~OPTIONAL DETAILS~~
- ☐ S-23 ..... ~~EQUIPMENT PAD DETAILS~~
- ☐ S-24 ..... ~~UNISTRUT BRACED EQUIPMENT RACK 1~~
- ☐ S-25 ..... ~~HSS STEEL EQUIPMENT RACK 2~~
- ☐ S-26 ..... ~~UNISTRUT EQUIPMENT RACK 3~~
- ☐ S-27 ..... ~~WALL MOUNTED EQUIPMENT DETAILS~~
- ☐ S-28 ..... ~~EQUIPMENT PAD ENCLOSURE~~
- ☐ S-29 ..... ~~EQUIPMENT PAD ENCLOSURE DETAILS~~
- ☐ S-30 ..... ~~PERIMETER FENCE DETAILS~~

30 SHEETS

4 STEEL ENGINEERING
26030 ACERO
MISSION VIEJO, CA 92691
949.305.1150 | FAX 949.305.1420

M BAR C CONSTRUCTION INC.
1770 LA COSTA MEADOWS DRIVE, SAN MARCOS, CA 92078
PHONE: (760) 744-4131
FAX: (760) 744-4449
ERIK@MBARCONLINE.COM
LIC # 869960 B AND C51
(770) 787-8645

ENGINEER'S APPROVAL

REGISTERED PROFESSIONAL ENGINEER
DUSTIN K. ROSEPINK
S 5885
CIVIL
STATE OF CALIFORNIA

BID INFORMATION

THE STRUCTURES AND DESIGNS IN THIS PC ARE PROPRIETARY TO M BAR C CONSTRUCTION, INC. AND 4 S.T.E.L. ENGINEERING, INC. ALL SITES USING THIS PC: M BAR C CONSTRUCTION, INC. SHALL BE THE STEEL CONTRACTOR & 4 S.T.E.L. ENGINEERING, INC. SHALL BE THE SEOR. SEE THE STANDARD NOTES FOR PC USE ON S-1 FOR ADDITIONAL REQUIREMENTS.

PRE-CHECK (PC) DOCUMENT

CODE: 2022 CBC

A SEPARATE PROJECT APPLICATION FOR CONSTRUCTION IS REQUIRED

APPROVED
DIV. OF THE STATE ARCHITECT
APP: 04-123080 PC
REVIEWED FOR
SS ☑ FLS ☑ ACS ☑ CG ☐
DATE: 11/25/2024

SITE SPECIFIC INFORMATION

VISALIA CAMPUS UNIV. CENTER
COLLEGE OF THE SEQUOIAS
915 S. MOONEY BLVD,
VISALIA, CA 93277

REVISIONS

MARK	DATE	DESCRIPTION

UG 22.1.1

4 STEL JOB #	MC02-V3-1-1
DATE	11-18-24
DRAWN BY	GM
CHECKED	RWS

COVER SHEET 1

S-1

DRAWINGS, SPECIFICATIONS AND OTHER DOCUMENTS, PREPARED BY THE DESIGN PROFESSIONAL (DP) AND THE DP'S CONSULTANTS ARE INSTRUMENTS OF SERVICE FOR USE SOLELY WITH RESPECT TO THIS PROJECT. THIS INCLUDES DOCUMENTS IN ELECTRONIC FORM. THE DP AND THE DP'S CONSULTANTS SHALL BE DEEMED THE AUTHORS AND OWNERS OF THEIR RESPECTIVE INSTRUMENTS OF SERVICE AND SHALL RETAIN ALL COMMON LAW, STATUTORY AND OTHER RESERVED RIGHTS, INCLUDING COPYRIGHTS. THE INSTRUMENTS OF SERVICE SHALL NOT BE USED BY THE OWNER FOR FUTURE ADDITIONS OR ALTERATIONS TO THIS PROJECT OR FOR OTHER PROJECTS, WITHOUT THE PRIOR WRITTEN AGREEMENT OF THE DP. ANY UNAUTHORIZED USE OF THE INSTRUMENTS OF SERVICE SHALL BE AT THE OWNER'S SOLE RISK AND WITHOUT LIABILITY TO THE DP AND THE DP'S CONSULTANTS.

NOTE: IF DWG, IS NOT 24 x 36, IT IS NOT FULL SIZE

IDENTIFICATION STAMP
DIV. OF THE STATE ARCHITECT
APP: 02-122821 INC: 2
REVIEWED FOR
SS ☑ FLS ☑ ACS ☑
DATE: 11/20/2025

A ○ B ○ C ○ D ○ E ○ F ○ G ○ H ○ I ○ J

DESIGN CHECK LIST

INSTRUCTIONS:
DESIGN PROFESSIONAL SHALL ENSURE ADEQUACY OF PC DESIGN AND PLAN PREPARATION BY VERIFYING THAT ALL THE APPLICABLE CHECKLIST ITEMS BELOW HAVE BEEN PROPERLY EVALUATED/EXECUTED.

SUBMISSION IS FOR: ☐ OTC ☒ REGULAR SUBMITTAL

SEOR

- ☒ ALLOWABLE LATERAL PRESSURE OF SOIL AT PROJECT SITE LIMITS GROUND-LEVEL LATERAL DISPLACEMENT OF THE STRUCTURE TO A MAXIMUM OF 1/2"
- ☒ SITE SPECIFIC GEOTECHNICAL REPORT HAS BEEN PROVIDED WITH A GEOHAZARD SECTION INCLUDED.
- ☒ VERIFY THE SITE PLAN SOLAR PANEL LAYOUT IS PROVIDED WITH AREA THAT DOES NOT EXCEED THE PC MAXIMUM.
- ☒ VERIFY IF CGS APPROVAL OF GEOTECHNICAL REPORT REQUIRED BECAUSE INDIVIDUAL PC STRUCTURES EXCEED 4000 SQ FT OR SITE IS LOCATED IN A STATE OR LOCAL GEOHAZARD ZONE. STRUCTURES MAY BE BROKEN UP INTO MULTIPLE 4,000 SQ FT STRUCTURES WITH SEISMIC BREAKS PER STUCTURAL DATA ON S-2.
- ☒ SOLAR PANEL + NON STRUCTURAL ITEMS < 3.15 psf
- ☒ S-2: VERIFY THE SITE PLANS PLANS UTILIZE A RISK CATEGORY II STRUCTURE.
- ☒ S-2: VERIFY APPROPRIATE SEISMIC SEPARATION PER 'STRUCTURAL DATA'.
- ☒ S-2: VERIFY THAT TABLES IN 'SITE SPECIFIC PARAMETERS' SECTION HAVE BEEN COMPLETED
- ☒ S-2: SPECIFY THE SOLAR PANEL AND VERIFY SOLAR PANEL CAPACITY FOR THE CORRESPONDING STRUCTURE WIDTH
- ☒ S-2: SPECIFY THE SOLAR PANEL'S DIMENSIONS AND WEIGHT AND SELECT THE APPROPRIATE SOLAR PANEL CONNECTION FORCE OPTION.
- ☒ S-3: VERIFY THAT DESIGN PROFESSIONAL STATEMENT REGARDING SOLAR PANEL MEETING PC CRITERIA PER HAS BEEN PROVIDED PER NOTE 15 WITHIN "PV PANEL AND PV PANEL FASTENER INSTALLATION PROCEDURE"
- ☒ S-3: VERIFY THAT OPTIONS FOR CONCRETE DURABILTY BASED ON EXPOSURE CLASS AND THE FOUNDATION SOILS CLASS HAVE BEEN SELECTED.
- ☒ S-3: VERIFY THE SITE SPECIFIC FOUNDATION LOCATIONS MEET WITH NOTE 10 ON S-3 IN THE SOILS NOTES SECTION FOR SET BACK FROM TOP OF SLOPES, OR THAT THE GEOTECHNICAL REPORT HAS ALLOWED A SMALLER DISTANCE.
- ☒ S-5: VERIFY THAT COLD FORMED SECTIONS AND HOT ROLLED SECTIONS HAVE BEEN SELECTED BASED ON THE SITE SPECIFIC PC ID'S UTILIZED ON SHEETS S-7, S-12, AND S-16.
- ☐ S-6: FOR T STRUCTURE, VERIFY WHETHER CANTILEVER MID-SPAN BLOCKING / BRACING REQUIRED PER S-16.
- ☐ S-6: FOR T STRUCTURE, VERIFY 2' MAXIMUM DIFFERENCE IN COLUMN HEIGHTS WITHIN A STRUCTURE.
- ☐ S-6: SELECT APPLICABLE FRAMING, BOLLARD, AND FOUNDATION OPTIONS.
- ☐ S-7: VERIFY T PC ID SELECTION MATCHES SITE SPECIFIC LAYOUT. VERIFY IF MULTI SPAN PURLIN HAS BEEN SELECTED FOR NOTE 3 IF APPLICABLE.
- ☐ S-8: VERIFY T PC ID FOUNDATION SELECTION MATCHES SITE SPECIFIC LAYOUT AND THAT SOILS CLASS SELECTION MATCHES S-3. VERIFY THAT SPIRAL TIE LENGTH AND SPACINGS HAVE BEEN SELECTED IN DETAIL 2. VERIFY IF STEEL CASING REQUIRED IN DETAIL 2. VERIFY IF NON-STRUCTURAL BOLLARD IS REQUIRED PER DETAIL 3.
- ☐ S-9: VERIFY T SPREAD FOOTING PC ID SELECTION MATCHES SITE SPECIFIC LAYOUT. VERIFY IF NON-STRUCTURAL BOLLARD IS REQUIRED PER DETAIL 2.
- ☐ S-10: VERIFY T BEAM TO COLUMN PC ID SELECTION MATCHES SITE SPECIFIC LAYOUT.
- ☒ S-11: FOR OT STRUCTURE, VERIFY WHETHER CANTILEVER MID-SPAN BLOCKING / BRACING REQUIRED PER S-16.
- ☒ S-11: FOR OT STRUCTURE, VERIFY 2' MAXIMUM DIFFERENCE IN COLUMN HEIGHTS WITHIN A STRUCTURE.
- ☒ S-11: SELECT APPLICABLE FRAMING, BOLLARD, AND FOUNDATION OPTIONS.
- ☒ S-12: VERIFY OT PC ID SELECTION MATCHES SITE SPECIFIC LAYOUT. VERIFY IF MULTI SPAN PURLIN HAS BEEN SELECTED FOR NOTE 3 IF APPLICABLE.
- ☒ S-13: VERIFY OT PC ID FOUNDATION SELECTION MATCHES SITE SPECIFIC LAYOUT AND THAT SOILS CLASS SELECTION MATCHES S-3. VERIFY THAT SPIRAL TIE LENGTH AND SPACINGS HAVE BEEN SELECTED IN DETAIL 2. VERIFY IF STEEL CASING REQUIRED IN DETAIL 2. VERIFY IF NON-STRUCTURAL BOLLARD IS REQUIRED PER DETAIL 3.
- ☐ S-14: VERIFY OT SPREAD FOOTING PC ID SELECTION MATCHES SITE SPECIFIC LAYOUT. VERIFY IF NON-STRUCTURAL BOLLARD IS REQUIRED PER DETAIL 2.
- ☒ S-15: VERIFY OT BEAM TO COLUMN PC ID SELECTION MATCHES SITE SPECIFIC LAYOUT.
- ☒ S-16: VERIFY PURLIN ID SELECTION MATCHES SITE SPECIFIC LAYOUT. VERIFY IF THE PURLIN CANTILEVER SCHEDULE SHOWS THAT THE T OR OT PC ID FOR THE ARRAY END COLUMNS NEED TO BE INCREASED DUE TO THE SITE SPECIFIC CANTLEVER EXCEEDING THE MAX CANTILEVER LENGTH SHOWN. VERIFY THAT THE PURLIN BRACE AND SPLICE DETAILS HAVE BEEN SELECTED AND MATCH THE INFORMATION FROM THE SELECTION FOR THE PURLIN ID.
- ☒ S-17: VERIFY THAT THE PURLIN BRACE AND SPLICE DETAILS HAVE BEEN SELECTED AND MATCH THE INFORMATION FROM THE SELECTION FOR THE PURLIN ID ON S-16.
- ☒ S-18: VERIFY PURLIN LAYOUT AND BOLTING OPTIONS HAVE BEEN SELECTED. VERIFY SOLAR PANEL LAYOUT OPTIONS SELECTED MATCH SITE SPECIFIC PLANS. VERIFY PV MODULE MOUNTING BOLT SIZE SELECTED MATCHES REQUIRED PV MODULE MOUNTING BOLT SIZE SPECIFIED IN THE PV MODULE INSTALLATION MANUAL. VERIFY WHETHER ANY GROUNDING/BONDING OPTIONS HAVE BEEN SELECTED.
- ☒ S-20: IF SHEET IS PRESENT, VERIFY THAT COLUMN MOUNTED EQUIPMENT SELECTIONS MATCH SITE SPECIFIC PLANS.
- ☒ S-21: VERIFY OPTIONAL BOLLARD SELECTIONS MATCH SITE SPECIFIC PLANS. VERIFY FOUNDATION OPTIONS FOR CONDUIT ROUTING MATCH SITE SPECIFIC PLANS.
- ☐ S-23: IF SHEET IS PRESENT, VERIFY THAT EQUIPMENT PAD AND RACK SELECTIONS MATCH SITE SPECIFIC PLANS.
- ☐ S-23: IF SHEET IS PRESENT AND BATTERY/BESS EQUIPMENT ITEM 19 SELECTED, VERIFY THAT ALL SITE SPECIFIC DRAWING REQUIREMENTS HAVE BEEN PROVIDED PER NOTE 14 ON DETAIL 1.
- ☐ S-29: IF SHEET IS PRESENT, VERIFY THAT ENCLOSURE OPTIONS HAVE BEEN SELECTED.
- ☐ S-30: IF SHEET IS PRESENT, VERIFY THAT FENCING OPTIONS HAVE BEEN SELECTED.

SITE SPECIFIC PARAMETERS

INSTRUCTIONS:
DESIGN PROFESSIONAL SHALL CHECK THE APPROPRIATE SELECTION BOXES BELOW AND ENTER THE DESIGN PARAMETERS APPLICABLE TO THE SPECIFIC PROJECT SITE.

SNOW
☒ 0 psf | pg = ________ psf | pf = ________ psf ☐ 5 psf ☐ 20 psf | Ce = ________

WIND
V = 94 mph <= 98 mph
Kzt = 1.00 ≤ 1 K_e = ________ ≤ 1 SITE ELEVATION = ________
EXPOSURE: ☒ C ☐ D (***NOT ELIGIBLE FOR OTC REVIEW***)

SEISMIC
☒ DESIGN BASED ON SITE CLASS DETERMINED PER CHAPTER 20 OF ASCE 7-16 GEOTECHICAL INVESTIGATION PROVIDED
SITE CLASS: ☐ C ☒ D ☐ E
S_S = 0.553 Fa = 1.0 PER ASCE 7-16 SUPPL 3, TABLE 11.4-1

☐ DESIGN BASED ON SITE SPECIFIC GROUND MOTION HAZARD ANALYSIS PER CHAPTER 21 OF ASCE 7-16
SHORT-PERIOD DESIGN SPECTRAL RESPONSE PARAMETER, S_{DS}, SHALL BE AS SPECIFIED IN GEOTECHNICAL INVESTIGATION
CGS APPROVAL REQUIRED
NOT ELIGIBLE FOR OTC REVIEW
SITE CLASS: ☐ C ☐ D ☐ E

$S_{DS} = {}^2/_3$ Fa. S_S = 0.5 ≤ 1.00
$C_S = S_{ds} \times I_e / R = \le 0.80$ USED IN DESIGN
SEISMIC DESIGN CATEGORY: ☒ D ☐ E

SOLAR PANEL CAPACITY

INSTRUCTIONS:
DESIGN PROFESSIONAL SHALL ENTER THE INFORMATION FOR THE PROJECT'S SOLAR PANEL, AND CHECK THE APPROPRIATE BOXES BELOW.

	☒	SOLAR PANEL: PANASONIC EVERVOLT EVPV390H (NAME)
OPTION 1	☒	STRUCTURE WIDTH < = 43 FT
	☒	SOLAR PANEL ALLOWABLE STRENGTH WIND UPWARD PRESSURE (ASD) 33.42 PSF IS > = 23.1 PSF
	☒	SOLAR PANEL ALLOWABLE STRENGTH WIND DOWNWARD PRESSURE (ASD) 75.2 PSF IS > = 26.3 PSF
	☐	SOLAR PANEL ALLOWABLE STRENGTH WIND DOWNWARD PRESSURE (ASD) + 5PSF SNOW ___ PSF IS > = 23.4 PSF
	☐	SOLAR PANEL ALLOWABLE STRENGTH WIND DOWNWARD PRESSURE (ASD) + 20PSF SNOW ___ PSF IS > = 31.9 PSF
OPTION 2	☐	STRUCTURE WIDTH > 43 FT
	☐	SOLAR PANEL ALLOWABLE STRENGTH WIND UPWARD PRESSURE (ASD) ___ PSF IS > = 47.2 PSF
	☐	SOLAR PANEL ALLOWABLE STRENGTH WIND DOWNWARD PRESSURE (ASD) ___ PSF IS > = 34.1 PSF
	☐	SOLAR PANEL ALLOWABLE STRENGTH WIND DOWNWARD PRESSURE (ASD) + 5PSF SNOW ___ PSF IS > = 29.2 PSF
	☐	SOLAR PANEL ALLOWABLE STRENGTH WIND DOWNWARD PRESSURE (ASD) + 20psf SNOW ___ psf IS > = 37.7 psf

SOLAR PANEL CONNECTION FORCE

INSTRUCTIONS:
DESIGN PROFESSIONAL SHALL ENTER THE INFORMATION FOR THE PROJECT'S SOLAR PANEL SIZE & WEIGHT. CHECK THE APPROPRIATE OPTION AND BOXES BELOW, AND CALCULATE THE PANEL SITE SPECIFIC BOLT FORCE IF APPLICABLE

	SOLAR PANEL DIMENSIONS 71.7 in x 40 in = 19.92 ft^2 SOLAR PANEL: PANASONIC EVERVOLT EVPV390H WEIGHT 45 lbs
OPTION 1 ☒	IS THE SITE-SPECIFIC PANEL SIZE LESS THAN 28.12 SQ FT? ☒ YES ☐ NO IF ANSWER IS <u>YES</u>, NO CALCULATION NEEDED AND OTC ALLOWED. IF ANSWER IS <u>NO</u>, SEE OPTION 2.
OPTION 2 ☐	IS THE SITE-SPECIFIC PANEL SIZE LESS THAN 29.50 SQ FT? ☐ YES ☐ NO IS THE SITE-SPECIFIC WIND SPEED LESS THAN OR EQUAL TO 96 MPH? ☐ YES ☐ NO IF BOTH ANSWERS ARE <u>YES</u>, NO CALCULATION NEEDED AND OTC ALLOWED. IF ONE OR BOTH ANSWERS ARE <u>NO</u>, SEE OPTION 3.
OPTION 3 ☐	***OTC IS NOT ALLOWED***. A STANDARD SUBMITTAL IS REQUIRED

MAXIMUM DESIGN PARAMETERS

RISK CATEGORY:....................II
ROOF LIVE LOAD (L_r):
- WITH SOLAR PANELS INSTALLED:..........12 psf (PER IR 16-8. REVISED ~~03/03/2021~~ 1/18/2024)
- OPEN TRELLIS SYSTEM:..........12 psf (PER IR 16-8. REVISED ~~03/03/2021~~ 1/18/2024)
- POINT LOAD:..........300 lb (PER IR 16-8. REVISED ~~03/03/2021~~ 1/18/2024)

MAX. ROOF SNOW LOAD (S):..........0 psf, 5 psf, 20 psf (VARIES - PER STRUCTURE SELECTED)

MAX. DEAD LOAD:
SOLAR PANEL/RACKING/ELEC..........3.15 psf

WIND: DIRECTIONAL PROCEDURE
BASIC WIND SPEED..........98 mph (3 SECOND GUST) (SEE NOTES BELOW) [1]
WIND EXPOSURE:..........C[1]
INTERNAL PRESSURE:..........N/A (OPEN STRUCTURE)
..........K_d=0.85
..........K_z=0.88, 0.925 (SEE NOTES BELOW) [1]
..........K_{zt}=1.00

SNOW:
GROUND SNOW, p_g = 0 psf, 5 psf, 20.0 psf
C_e = 0.9
C_t = 1.2
I = 1.0
C_S = 1.0
p_s = $0.7.C_e.C_t.I.p_g.C_S$ = 0 psf, 5 psf, 20.0 psf
ROOF SNOW, p_f = 0 psf, 5 psf, 20.0 psf
$p_{S.E}$ = 0.0 psf

SEISMIC:
BASE:..........FROM USABLE SOIL HT. PER GEOTECHNICAL REPORT
SEISMIC IMPORTANCE FACTOR:..........I_e = 1.0
- SITE CLASS:.......... E [3]
- SHORT SPECTRAL RESPONSE:..........S_{DS} = 1.000 [2]
- RESPONSE MODIFICATION FACTOR:.......... R = 1.25
- SEISMIC RESPONSE COEFFICIENT:..........C_S = 0.800 [2]
- SEISMIC REDUNDANCY FACTOR:.......... ρ = 1.3
- ....ρC_S= 1.040

DESIGN BASE SHEAR: (LRFD)
- T-STRUCTURES:.......... 13,466 [2] lb MAX. (VARIES - PER STRUCTURE SELECTED)
- OFFSET T-STRUCTURES:.......... 7,168 [2] lb MAX. (VARIES - PER STRUCTURE SELECTED)

SEISMIC DESIGN CATEGORY:.......... E
SEISMIC FORCE RESISTING SYSTEM:..........ORDINARY STEEL CANTILEVERED COLUMN
ANALYSIS PROCEDURE:.......... EQUIVALENT LATERAL FORCE

NOTES:
1. THIS PC'S WIND FORCE RESISTING SYSTEM IS DESIGNED TO ONE WIND CRITERIA. 98 mph EXPOSURE C WITH q_h = 19.3 psf MAX. EACH CRITERIA IS DESIGNED WITH THE K_z, K_d, AND K_{zt} PER THE ABOVE. THIS PC MAY BE USED IN ANY LOCATION WITH ANY WIND SPEED AND VALUES OF K_z, K_d, AND K_{zt} SUCH THAT THE RESULTING q_h FOR THE SITE DOES NOT EXCEED 19.3 psf. THE DESIGN PROFESSIONAL IN GENERAL RESPONSIBLE CHARGE IS RESPONSIBLE FOR ENSURING THE WIND CRITERIA SELECTED HAS A HIGHER q_h THAN THE SITE SPECIFIC q_h.
2. THIS PC'S SEISMIC FORCE RESISTING SYSTEM IS DESIGNED TO ONE SEISMIC CRITERIA. S_{DS} = 1.0 WITH R = 1.25 AND $\rho C_s = S_{DS}/R$ = 1.0/1.25 = 0.800x(1.3)=1.040. THIS PC MAY BE USED IN ANY LOCATION WITH SUCH THAT THE RESULTING C_s USING THE APPROPRIATE R VALUE DOES NOT EXCEED THE DESIGN CRITERIA C_s VALUES. THE DESIGN PROFESSIONAL IN GENERAL RESPONSIBLE CHARGE IS RESPONSIBLE FOR ENSURING THE C_s CRITERIA SELECTED HAS A HIGHER C_s THAN THE SITE SPECIFIC C_s. S_{DS} VALUE TO BE CONFIRMED BY THE GEOTECHNICAL REPORT AND CLEARLY IDENTIFIED ON THE CONSTRUCTION DRAWINGS.
3. THIS PC IS EXEMPTED FROM SITE-SPECIFIC GROUND MOTION HAZARD ANALYSIS REQUIREMENTS OF ASCE 7 SECTION 11.4.8. THIS PC IS DESIGNED USING THE EQUIVALENT LATERAL FORCE PROCEDURE AND A SEISMIC RESPONSE COEFFICIENT BASED ON THE SHORT PERIOD DESIGN SPECTRAL RESPONSE ACCELERATION, SDS.
FOR SITE CLASS 'D'; THE INCREASE IN THE SM1 PARAMETER PRESCRIBED IN THE EXCEPTION TO ASCE 7 SEC 11.4.8, ITEM 1, DOES NOT IMPACT THE DESIGN OF THE STRUCTURE.
FOR SITE CLASS 'E'; THE STRUCTURE COMPLIES WITH THE EXCEPTION 1 CONDITIONS OF ASCE 7 SECTION 11.4.8, ITEM 2.

BID INFORMATION

THE STEEL STRUCTURES IN THIS PC ARE PROPRIETARY TO M BAR C CONSTRUCTION, INC. AND 4 S.T.E.L. ENGINEERING, INC. THE STEEL WORK SHALL NOT GO OUT TO BID.

STRUCTURAL DATA

LATERAL RESISTING SYSTEM.......... CANTILEVERED COLUMN
FOUNDATION.......... PIER AND SPREAD FOOTING
MINIMUM REQUIRED SEISMIC SEPARATION.......... 10"
TESTING AND INSPECTION LIST.......... SEE SHEETS S-3 & S-4
DESIGNED TO SUPPORT FIRE SPRINKLERS..........NO

FIRE LIFE SAFETY

AUTOMATIC FIRE SPRINKLERS REQUIRED? (Y/N).......N

1. FOR ALL CANOPY ARRAYS - VERIFY COMPLIANCE W/ CFC 503.2.1
FIRE APPARATUS ACCESS ROADS SHALL HAVE AN UNOBSTRUCTED WIDTH OF NOT LESS THAN 20 FEET, EXCLUSIVE OF SHOULDERS, EXCEPT FOR APPROVED SECURITY GATES IN ACCORDANCE WITH SECTION 503.6, AND AN UNOBSTRUCTED VERTICAL CLEARANCE OF NOT LESS THAN 13 FEET 6 INCHES
2. ALL GROUNDING SHALL BE IN ACCORDANCE WITH CEC ART. 250

ACCESS

1. CONCRETE BOLLARD ABOVE FOUNDATIONS (RAISED PIERS) CANNOT BE LOCATED IN ACCESSIBLE PARKING SPACES OR ACCESS AISLES.
2. SLOPED PORTIONS OF FOUNDATIONS, WHEN LOCATED IN ACCESSIBLE PARKING STALL OR ACCESS AISLE, MUST HAVE A SLOPE LESS THAN OR EQUAL TO 2.08%
3. MINIMUM ARRAY CLEAR HEIGHTS IN ACCESSIBLE AREAS:
8'-2" - WHEN LOCATED OVER ACCESSIBLE PARKING OR ACCESS AISLES
9'-6" - WHEN LOCATED OVER ACCESSIBLE PASSENGER LOADING ZONES

BUILDING DATA

TYPE OF CONSTRUCTION.......... II B
OCCUPANCY.......... VARIES - SEE EXAMPLES BELOW
NUMBER OF STORIES..........1
BUILDING AREAS.......... VARIES DUE TO OCCUPANCY - SEE EXAMPLES BELOW
MODULE SIZES.......... VARIES WITH OPTIONS
BUILDING LENGTH:
ALL WIDTHS.......... MAX. 500'-0" LENGTH
NOTE: NO SEISMIC AND/OR THERMAL EXPANSION JOINTS REQUIRED ALONG THE LENGTH OF THE STRUCTURES. (ALL JOINTS ARE INTERNAL)

OCCUPANCY AND BUILDING AREA EXAMPLES:
ALL STRUCTURES SHALL BE BASED ON RISK CATEGORY II STRUCTURE.
~~OCCUPANCY A:~~
~~EXAMPLE 1:~~
~~STRUCTURES LOCATED OVER LUNCH AREA WITHOUT FIXED SEATING~~
~~OCCUPANCY: A-2~~
~~OCCUPANCY LOAD: 15 ft^2/person - MAX 300 PERSONS FOR RISK II~~
~~MAX SQ FT: 4,500 ft^2~~
~~EXAMPLE 2:~~
~~STRUCTURES LOCATED OVER LUNCH AREA WITH FIXED SEATING~~
~~OCCUPANCY: A-2~~
~~OCCUPANCY LOAD: 18 in/person ALONG LINEAR BENCH - MAX 300 PERSONS FOR RISK II~~
~~MAX SQ FT: 5,400 LINEAR INCHES OF FIXED SEATING UNDER THE STRUCTURE~~
~~EXAMPLE 3:~~
~~STRUCTURES LOCATED OVER AN AREA DESIGNATED FOR ASSEMBLY (TYPICALLY AMPHITHEATER, OR OTHER SPACE WITH FIXED SEATING OR DESIGNATED AS A STANDING ASSEMBLY AREA)~~
~~OCCUPANCY: A~~
~~OCCUPANCY LOAD: 7 ft^2/person - MAX 300 PERSONS FOR RISK II~~
~~MAX SQ FT: 2,100 ft^2~~
~~SHADE STRUCTURE~~
~~EXAMPLE 1:~~
~~STRUCTURES LOCATED OVER A FIELD, BLACKTOP, PLAYGROUND EQUIPMENT, OR OTHER NON DESIGNATED USE SPACES~~
~~OCCUPANCY: E~~
~~OCCUPANCY LOAD: 20 ft^2/person - MAX 250 PERSONS FOR RISK II~~
~~MAX SQ FT: 5,000 ft^2~~
PARKING
EXAMPLE 1:
STRUCTURES LOCATED OVER PARKING
OCCUPANCY: S-2
OCCUPANCY LOAD: 200 ft^2/person
MAX SQ FT: UNLIMITED PER CBC 406.5.4 AND 406.5.5

GENERAL NOTES

1. ALL WORK SHALL CONFORM TO TITLE 24, CALIFORNIA CODE OF REGULATIONS (CCR).
2. CHANGES TO THE APPROVED DRAWINGS AND SPECIFICATIONS SHALL BE MADE BY ADDENDA OR CONSTRUCTION CHANGE DOCUMENTS APPROVED BY THE DIVISION OF THE STATE ARCHITECT, AS REQUIRED BY SECTION 4-338, PART 1, TITLE 24, CCR.
3. A 'DSA CERTIFIED' PROJECT INSPECTOR EMPLOYED BY THE DISTRICT (OWNER) AND APPROVED BY THE DIVISION OF THE STATE ARCHITECT SHALL PROVIDE CONTINUOUS INSPECTION OF THE WORK. THE DUTIES OF THE INSPECTOR ARE DEFINED IN SECTION 4-342, CALIFORNIA BUILDING STANDARDS ADMINISTRATIVE CODE (PART 1, TITLE 24, CCR).
4. A 'DSA CERTIFIED' INSPECTOR WITH CLASS 2 CERTIFICATION IS REQUIRED FOR THIS PROJECT.
5. A 'DSA CERTIFIED' INSPECTOR WHO IS SPECIFICALLY QUALIFIED IN MECHANICAL AND ELECTRICAL WORK WILL BE REQUIRED FOR THIS PROJECT.
6. A DSA ACCEPTED TESTING LABORATORY DIRECTLY EMPLOYED BY THE SCHOOL BOARD SHALL CONDUCT ALL THE REQUIRED TESTS AND INSPECTIONS FOR THE PROJECT.
7. GRADING PLANS, DRAINAGE IMPROVEMENTS, ROAD AND ACCESS REQUIREMENTS AND ENVIRONMENTAL HEALTH CONSIDERATIONS SHALL COMPLY WITH ALL LOCAL ORDINANCES.
8. IF THE PROJECT IS DIVIDED INTO INCREMENTS: THE SCOPE OF WORK FOR EACH INCREMENT MUST BE CLEARLY SPECIFIED ON THE TITLE SHEET OF ALL INCREMENTS SUBMITTED.
9. DESIGN PER 2022 CBC AND ITS PRESCRIBED LOADING AND MATERIAL SPECIFICATIONS:
   - ASCE 7-16
   - ASCE 19-16
   - 15TH EDITION AISC STEEL MANUAL
   - AISI S100-16(2020) W/S2-20 COLD-FORMED STEEL STRUCTURAL MEMBERS, WITH SUPP. 2, 2020 EDITION
   - ACI 318-19
10. THESE STRUCTURES ARE NOT DESIGNED TO BE, NOR SHALL THEY BE, ENCLOSED.
11. ALL DIMENSIONS, CONDITIONS, AND ELEVATIONS ARE TO BE FIELD VERIFIED BY THE CONTRACTOR PRIOR TO COMMENCING WORK OR FABRICATION. IF ANY DISCREPANCIES ARE FOUND OR IF ANY CONDITION EXISTS NOT AS SHOWN ON THE DRAWINGS THE DESIGN PROFESSIONAL IN RESPONSIBLE CHARGE SHALL BE NOTIFIED IMMEDIATELY.
12. IF A SNOW LOAD OPTION IS USED THEN THE SITE-SPECIFIC MAX. ROOF SNOW LOADING INCLUDING DRIFT MUST BE LESS THAN OR EQUAL TO THE psf OF SNOW LOAD SELECTED FOR THE SITE USE (5 OR 20 psf).
13. NO FUTURE STRUCTURAL ROOF DECK OR SHEATHING MAY BE APPLIED TO THE OPEN GRID.
14. THE ALLOWABLE MAXIMUM psf ALLOWED FOR THE SOLAR PANEL, ELECTRICAL, AND OTHER NON-STRUCTURAL ITEMS IS 3.15 psf.
15. ALL SCREWS TO BE ITW BUILDEX TEK SCREWS PER ICC ESR-1976 OR ELCO DRILL SCREW PER ICC ESR-3294.
16. ALL UNISTRUT PARTS & CALLOUTS MAY BE SUBSTITUTED BY OTHER MANUFACTURERS W/ EQUIVALENT STRENGTH.

CODES

GOVERNING CODES:
CALIFORNIA CODE OF REGULATIONS:
2022 CALIFORNIA ADMINISTRATIVE CODE, PART 1, TITLE 24 C.C.R.
2022 CALIFORNIA BUILDING CODE (CBC), PART 2, TITLE 24 C.C.R.
(2021 INTERNATIONAL BUILDING CODE VOLUMES 1-2 AND 2022 CALIFORNIA AMENDMENTS)
2022 CALIFORNIA ELECTRICAL CODE (CEC), PART 3, TITLE 24 C.C.R.
(2020 NATIONAL ELECTRICAL CODE AND 2022 CALIFORNIA AMENDMENTS)
2022 CALIFORNIA MECHANICAL CODE (CMC) PART 4, TITLE 24 C.C.R.
(2021 UNIFORM MECHANICAL CODE AND 2022 CALIFORNIA AMENDMENTS)
2022 CALIFORNIA PLUMBING CODE (CPC), PART 5, TITLE 24 C.C.R.
(2021 UNIFORM PLUMBING CODE AND 2022 CALIFORNIA AMENDMENTS)
2022 CALIFORNIA ENERGY CODE (CEC), PART 6, TITLE 24 C.C.R.
2022 CALIFORNIA FIRE CODE, PART 9, TITLE 24 C.C.R.
(2021 INTERNATIONAL FIRE CODE AND 2022 CALIFORNIA AMENDMENTS)
2022 CALIFORNIA GREEN BUILDING STANDARDS CODE, PART 11, TITLE 24 C.C.R.
2022 CALIFORNIA REFERENCED STANDARDS, PART 12, TITLE 24 C.C.R.
TITLE 19 C.C.R., PUBLIC SAFETY, STATE FIRE MARSHAL REGULATIONS.

NFPA 13	AUTOMATIC FIRE SPRINKLER SYSTEMS	2022 EDITION
NFPA 72	NATIONAL FIRE ALARM & SIGNALING CODE	2022 EDITION

REFERENCE CODE SECTIONS FOR APPLICABLE STANDARDS:
2022 CBC, CHAPTER 35
2022 CFC, CHAPTER 80

PRE-CHECK (PC) DOCUMENT

CODE: 2022 CBC
A SEPARATE PROJECT APPLICATION FOR CONSTRUCTION IS REQUIRED

4 STEL ENGINEERING
26030 ACERO
MISSION VIEJO, CA 92691
949.305.1150 | FAX 949.305.1420

M BAR C CONSTRUCTION INC.
1770 LA COSTA MEADOWS DRIVE SAN MARCOS, CA 92078 ERIK KRIVOKOPICH
PHONE: (760) 744-4131 FAX: (760) 744-4449 ERIK@MBARCONLINE.COM
LIC # 869960 B AND C51 (775) 787-8845

ENGINEER'S APPROVAL
REGISTERED PROFESSIONAL ENGINEER DUSTIN K. ROSEPINK S 5885 STRUCTURAL STATE OF CALIFORNIA

BID INFORMATION
THE STRUCTURES AND DESIGNS IN THIS PC ARE PROPRIETARY TO M BAR C CONSTRUCTION, INC. AND 4 S.T.E.L. ENGINEERING, INC. ALL SITES USING THIS PC: M BAR C CONSTRUCTION, INC. SHALL BE THE STEEL CONTRACTOR & 4 S.T.E.L. ENGINEERING, INC. SHALL BE THE SEOR. SEE THE STANDARD NOTES FOR PC USE ON S-1 FOR ADDITIONAL REQUIREMENTS.

PRE-CHECK (PC) DOCUMENT
CODE: 2022 CBC
A SEPARATE PROJECT APPLICATION FOR CONSTRUCTION IS REQUIRED

APPROVED
DIV. OF THE STATE ARCHITECT
APP: 04-123080 PC
REVIEWED FOR
SS ☑ FLS ☑ ACS ☑ CG ☐
DATE: 11/25/2024

SITE SPECIFIC INFORMATION
VISALIA CAMPUS UNIV. CENTER
COLLEGE OF THE SEQUOIAS
915 S. MOONEY BLVD,
VISALIA, CA 93277

REVISIONS

MARK	DATE	DESCRIPTION

UG 22.1.1

4 STEL JOB #	MC02-V3-1-1
DATE	11-18-24
DRAWN BY	GM
CHECKED	RWS

COVER SHEET 2

S-2

DRAWINGS, SPECIFICATIONS AND OTHER DOCUMENTS, PREPARED BY THE DESIGN PROFESSIONAL (DP) AND THE DP'S CONSULTANTS ARE INSTRUMENTS OF SERVICE FOR USE SOLELY WITH RESPECT TO THIS PROJECT. THIS INCLUDES DOCUMENTS IN ELECTRONIC FORM. THE DP AND THE DP'S CONSULTANTS SHALL BE DEEMED THE AUTHORS AND OWNERS OF THEIR RESPECTIVE INSTRUMENTS OF SERVICE AND SHALL RETAIN ALL COMMON LAW, STATUTORY AND OTHER RESERVED RIGHTS, INCLUDING COPYRIGHTS. THE INSTRUMENTS OF SERVICE SHALL NOT BE USED BY THE OWNER FOR FUTURE ADDITIONS OR ALTERATIONS TO THIS PROJECT OR FOR OTHER PROJECTS, WITHOUT THE PRIOR WRITTEN AGREEMENT OF THE DP. ANY UNAUTHORIZED USE OF THE INSTRUMENTS OF SERVICE SHALL BE AT THE OWNER'S SOLE RISK AND WITHOUT LIABILITY TO THE DP AND THE DP'S CONSULTANTS.

NOTE: IF DWG. IS NOT 24 x 36, IT IS NOT FULL SIZE

IDENTIFICATION STAMP
DIV. OF THE STATE ARCHITECT
APP: 02-122821 INC: 2
REVIEWED FOR
SS ☑ FLS ☑ ACS ☑
DATE: 11/20/2025

PV PANEL AND PV PANEL FASTENER INSTALLATION PROCEDURE

1. PRIOR TO PRETENSIONED PANEL FASTENER INSTALLATION, THE CONTRACTOR MUST SUBMIT TO THE PROFESSIONAL IN RESPONSIBLE CHARGE FOR REVIEW AND ACCEPTANCE A DETAILED PRETENSIONED PANEL FASTENER INSTALLATION PROCEDURE OUTLINING PROVISIONS TO ENSURE ALL PRETENSIONED PANEL FASTENERS ARE INSTALLED AND TORQUED WITHIN THE SPECIFIED MINIMUM AND MAXIMUM TORQUE RANGE. A COPY OF THE RESPONSIBLE DESIGN PROFESSIONAL-ACCEPTED INSTALLATION PROCEDURE SHALL BE PROVIDED TO THE SPECIAL INSPECTOR AND PROJECT INSPECTOR PRIOR TO COMMENCING PANEL FASTENER INSTALLATION.

   NOTE: THE FASTENER INSTALLATION PROCEDURE MAY ALSO BE SUBMITTED AT TIME OF SITE-SPECIFIC APPLICATION AND INCLUDED ON THE SITE-SPECIFIC CONTRACT DOCUMENTS.

2. INSTALLATION VERIFICATION TESTING AND SPECIAL INSPECTION

   PC DRAWINGS HAVING PRETENSIONED PANEL FASTENER CONNECTIONS SHALL SPECIFY ON APPLICABLE PANEL CONNECTION DETAIL(S):

   SPECIAL INSPECTION AND TORQUE TESTING OF PRETENSIONED PANEL FASTENER INSTALLATION SHALL BE PERFORMED BY A QUALIFIED REPRESENTATIVE OF THE LABORATORY OF RECORD (LOR) IN ACCORDANCE WITH SECTION 2.1.8 OF IR PC-7 PC DESIGN CRITERIA FOR CANTILEVERED CANOPY STRUCTURES.

3. SPECIAL INSPECTION AND TESTING
   TO ENSURE COMPLIANCE WITH THE CONTRACTOR'S INSTALLATION PROCEDURE AND DSA-APPROVED CONSTRUCTION DOCUMENTS, SPECIAL INSPECTION OF PRETENSIONED PANEL FASTENER INSTALLATION SHALL BE PERFORMED AS FOLLOWS:
   a. VERIFY THAT SPECIFIED FASTENERS ARE UTILIZED.
   b. VERIFY THAT INSTALLERS HAVE ACCESS TO AND FOLLOW THE INSTALLATION PROCEDURE, INCLUDING ANY SPECIFIED CALIBRATED INSTALLATION EQUIPMENT.
   c. VERIFY AND DOCUMENT PRE-INSTALLATION QUALIFICATION FOR EACH PV PANEL FASTENER INSTALLER BEFORE CONTINUING WITH INSTALLATION BEYOND THIS QUALIFICATION PROCEDURE ON THE PROJECT AS FOLLOWS:
   d. PERFORM TORQUE TESTING OF 30 RANDOMLY SELECTED (AS SPECIFIED IN THE CALIFORNIA ADMINISTRATIVE CODE [CAC]) PANEL FASTENERS FROM THE FIRST 100 FASTENERS INSTALLED.
   e. IF 30 CONSECUTIVE CONFORMING TEST ARE NOT ACHIEVED WITHIN THE FIRST 100 FASTENERS INSTALLED, INSTALL ANOTHER 100 FASTENERS, AND REPEAT THE TESTING PROCESS UNTIL 30 CONSECUTIVE TEST ARE ACHIEVED. ALL FASTENERS FAILING INSTALLATION TORQUE REQUIREMENTS SHALL BE REPLACED AND/OR RE-INSTALLED CORRECTLY BY THE INSTALLER AND TESTED FOR CONFORMANCE.
   f. EQUIPMENT AND TOOLS (E.G., TORQUE WRENCHES) USED FOR VERIFICATION SHALL BE PROVIDED BY THE LOR AND CALIBRATED IN ACCORDANCE WITH MANUFACTURER'S RECOMMENDATIONS AND PERTINENT STANDARD (E.G., ANSI/ASME B107).

4. SPECIAL INSPECTION AND TESTING RATES
   AFTER COMPLETION OF THE PRE-INSTALLATION QUALIFICATION DESCRIBED IN SECTION 2.1.8.3.3 ABOVE, SPECIAL INSPECTION AND TORQUE TESTING OF THE REMAINING INSTALLED PRETENSIONED PANEL FASTENERS (CHOSEN RANDOMLY AS SPECIFIED IN THE CAC, UNLESS INSTALLATION CONCERNS SUGGEST OTHERWISE) TO VERIFY THAT MINIMUM TORQUE VALUES ARE ACHIEVED AND THAT MAXIMUM VALUES ARE NOT EXCEEDED SHALL OCCUR AT LEAST AT THE RATES SHOWN BELOW TO VERIFY CONFORMANCE FOR EACH INSTALLER:

SPECIAL INSPECTION AND TORQUE TESTING RATES TABLE

TOTAL NUMBER OF PANEL FASTENERS ON THE PROJECT	SPECIAL INSPECTION	% OF TOTAL TO BE TESTED
0 - 800	CONTINUOUS	50
801 - 1600	CONTINUOUS	33
1601-3500	PERIODIC*	20
3501-7500	PERIODIC*	10
MORE THAN 7500	PERIODIC*	5

   * FOR PROJECTS WITH MORE THAN 1600 TOTAL PANEL FASTENERS, THE FIRST 1600 SHALL RECEIVE CONTINUOUS INSPECTION.
   IF ANY FASTENER FAILS TORQUE TESTING, ALL FASTENERS OF THE SAME TYPE AND BY THE SAME INSTALLER, BUT NOT PREVIOUSLY TESTED, SHALL BE TESTED UNTIL 20 CONSECUTIVE FASTENERS PASS, THEN RESUME THE INITIAL TEST FREQUENCY

5. ALL SOLAR PANELS MUST BE INSTALLED BY PROPERLY TRAINED AND QUALIFIED PERSONNEL. PROPERLY TRAINED PERSONNEL SHALL BE:
   - FAMILIAR WITH THE DIFFERENCE BETWEEN A DRILL GUN AND AN IMPACT GUN.
   - FAMILIAR WITH HOW TO MEASURE THE TORQUE ON THE INSTALLED BOLT.
   - SHALL BE TRAINED IN INSTALLATION OF STRUCTURAL STEEL BOLTING.
6. ALL SOLAR PANEL INSTALLATION BOLTS SHALL BE ASTM F593C STAINLESS STEEL BOLTS.
7. TESTING OF ASTM F593C SOLAR PANEL ATTACHMENT BOLTS IS REQUIRED.
8. SOLAR PANELS MUST BE SECURED TO THE STRUCTURE WITH A MINIMUM OF 4 DIRECT BOLTS. ALL 4 BOLTS MUST BE PROPERLY INSTALLED, TORQUED, AND INSPECTED FOR ALL PANELS INSTALLED ON A STRUCTURE BY THE END OF THE WORK DAY. NO PANEL MAY BE LEFT ON THE STRUCTURE WITHOUT ALL 4 BOLTS INSTALLED AND PROPERLY TORQUED.
9. THE INSTALLATION TORQUE SHALL BE INSPECTED TO BE IN CONFORMANCE WITH 5/S-18 OR 7/S-18.
10. SPECIAL INSPECTION OF SOLAR PANEL BOLT INSTALLATION SHALL BE PER NOTE 3 ABOVE.
11. CONTRACTOR RESPONSIBLE FOR SOLAR PANEL INSTALLATION AND ATTACHMENT SHALL PROVIDE A SUBMITTAL TO THE SITE SPECIFIC STRUCTURAL ENGINEER OF RECORD FOR THEIR REVIEW CONTAINING: THE PANEL INSTALLATION PROCEDURES, METHOD TO ENSURE ALL PANELS HAVE ALL 4 BOLTS INSTALLED AND PROPERLY TORQUED BEFORE THE END OF EVERY WORK DAY, ALL TOOLS USED TO SECURE THE SOLAR PANEL (INCLUDING BUT NOT LIMITED TO: POWER TOOLS RPMS, TOOLS MAX TORQUE ABILITY, METHOD OF ENSURING TOQUE VALUES ARE NOT EXCEEDED, ETC),, AND ALL BOLTS AND HARDWARE USED TO SECURE THE PANEL TO THE STRUCTURE,
12. SOLAR PANELS MAY BE INSTALLED IN LANDSCAPE OR PORTRAIT SUBJECT TO PANEL MANUFACTURER INSTALLATION REQUIREMENTS.
13. SOLAR PANELS ARE TO BE LISTED AND LABELED IN ACCORDANCE WITH UL1703, OR IEC / UL61730-1 & IEC / UL61730-2 PER CBC SECTION 1511.9 FOR BOTH PORTRAIT AND LANDSCAPE INSTALLATIONS.
14. THE LOAD RATINGS FOR THE SOLAR PANELS SELECTED BY THE CONTRACTOR MUST MEET OR EXCEED THE ACTUAL DESIGN WIND PRESSURES SHOWN ON THE PC PLANS. SEE S-1 DESIGN PARAMETER CHECK LIST NOTE 2 FOR DESIGN WIND PRESSURES.
15. THE OWNER'S SITE PROFESSIONAL SHALL PROVIDE PRODUCT DOCUMENTATION FROM THE SOLAR PANEL SUPPLIER, INCLUDING PANEL DIMENSIONS AND LOAD RATINGS, TO THE PC DESIGN PROFESSIONAL FOR REVIEW PRIOR TO SUBMITTAL TO DSA FOR PLAN REVIEW. DOCUMENTATION SHALL IDENTIFY PANEL LOAD RATINGS AS ALLOWABLE OR STRENGTH LEVEL,THE NUMBER OF FASTENERS REQUIRED TO ACHIEVE THE RATING, AND SPECIFY WHETHER THE LOADS LISTED ARE DESIGN OR TEST VALUES FROM THE UL 1703 TESTS. UPON ACCEPTANCE, THE PC DESIGN PROFESSIONAL SHALL PROVIDE A STATEMENT TO OWNER'S SITE PROFESSIONAL THAT THE SOLAR PANELS ARE IN COMPLIANCE WITH THE APPROVED PC PLANS. THE OWNER'S SITE PROFESSIONAL SHALL SUBMIT THE STATEMENT AND PANEL DOCUMENTATION TO DSA WITH THE PLAN REVIEW PACKAGE.
16. IF 4 S.T.E.L. ENGINEERING, INC. IS NOT THE DESIGN PROFESSIONAL IN GENERAL RESPONSIBLE CHARGE IT WILL NEED TO BE CONTRACTED BY THE APPROPRIATE PARTY IN ORDER TO SUPPLY THE REQUIRED DOCUMENTATION IN NOTE 12 ABOVE, THE CONTRACT SHALL PROVIDE THE APPROPRIATE FEE AND A MINIMUM OF 15 BUSINESS DAYS LEAD TIME TO REVIEW THE DOCUMENTS IN ORDER TO GENERATE THE REQUIRED STATEMENT. ANY REQUESTS MADE WITH LESS NOTICE WILL REQUIRE ADDITIONAL FEES. SAME DAY REQUESTS WILL NOT BE ACCEPTED.

SPECIAL INSPECTION

1. SOILS:
   - VERIFY THE SITE HAS BEEN PREPARED PROPERLY PRIOR TO PLACEMENT OF CONTROLLED FILL AND/OR EXCAVATIONS FOR FOUNDATIONS.
   - VERIFY THAT THE FOUNDATION EXCAVATIONS ARE PROPER WIDTH, EXTENDED TO PROPER DEPTH AND HAVE REACHED PROPER MATERIAL.
   - VERIFY THAT MATERIALS BELOW FOOTINGS ARE ADEQUATE TO ACHIEVE THE DESIGN BEARING CAPACITY.
2. PIER FOUNDATIONS:
   - INSPECT DRILLING OPERATIONS AND MAINTAIN COMPLETE AND ACCURATE RECORDS FOR EACH PIER.
   - VERIFY LOCATIONS OF PIERS.
3. CONCRETE:
   - VERIFY USE OF REQUIRED DESIGN MIX, DETERMINE THE TEMPERATURE OF THE CONCRETE, AND (WHERE REQUIRED) PERFORM AIR CONTENT TEST.
   - TEST CONCRETE (COMPRESSION TEST).
   - INSPECT PLACEMENT OF FORMWORK, REINFORCING STEEL, EMBEDDED ITEMS, AND CONCRETE. INSPECT CURING AND FORM REMOVAL.
   - INSPECT INSTALLATION OF POST-INSTALLED ANCHORS.
   - TEST POST-INSTALLED ANCHORS PER 2022 CBC 1910A.5.
   - ALL ½"Ø HILTI STAINLESS STEEL KB-TZ2 BOLTS TO BE INSTALLED TO 40 FT- lbs OF TORQUE. ALL ⅝"Ø HILTI STAINLESS STEEL KB-TZ2 BOLTS TO BE INSTALLED TO 60 FT- lbs OF TORQUE. ALL ¾"Ø HILTI STAINLESS STEEL KB-TZ2 BOLTS TO BE INSTALLED TO 125 FT- lbs OF TORQUE. AT LEAST 50% OF THE INSTALLED ANCHORS SHALL BE TESTED. HILTI KB TZ2 BOLTS PER ICC ESR-4266.
   - SLUMP TEST SHALL BE PERFORMED PER SITE SPECIFIC DSA-103.
4. STEEL:
   - VERIFY THAT ALL MATERIALS ARE APPROPRIATELY MARKED AND THAT:
     - MILL CERTIFICATES INDICATE MATERIAL PROPERTIES THAT COMPLY WITH REQUIREMENTS.
     - MATERIAL SIZES, TYPES AND GRADES COMPLY WITH REQUIREMENTS.
   - TEST UNIDENTIFIED MATERIALS.
   - VERIFY MEMBER LOCATIONS, BRACING AND ALL DETAILS CONSTRUCTED IN THE FIELD.
   - VERIFY STIFFENER LOCATIONS, CONNECTION TAB LOCATIONS, AND ALL CONSTRUCTION DETAILS FABRICATED IN THE SHOP.
   - VERIFY WELD FILLER MATERIAL IDENTIFICATION MARKINGS PER AWS DESIGNATION LISTED ON THE DSA APPROVED DOCUMENTS AND THE WPS.
   - VERIFY WELD FILLER MATERIAL MANUFACTURER'S CERTIFICATE OF COMPLIANCE.
   - VERIFY WPS, WELDER QUALIFICATIONS, AND EQUIPMENT.
   - INSPECT GROOVE, MULTI-PASS, AND FILLET WELDS > 5/16" (BOTH SHOP AND FIELD WELDS).
5. SHOP FABRICATION:
   - VERIFY FABRICATOR'S FABRICATION AND QUALITY CONTROL PROCEDURES.
   - VERIFY ALL ASPECTS OF SHOP FABRICATION INCLUDING MEMBER LOCATIONS, DIMENSIONAL LAYOUT OF ALL PARTS AND PIECES, ALL WELDING, BOLTING, ETC.
6. SEE DSA APPROVED 103 FOR ADDITIONAL REQUIREMENTS.

CONCRETE NOTES

1. CONCRETE MIN. 4,500 PSI AT 28 DAYS UNLESS THE GEOTECHNICAL REPORT ALLOWS FOR A LOWER STRENGTH (4,000 PSI MIN.). BATCH PLANT INSPECTION NOT REQUIRED.
2. CONCRETE TO REACH 1,000 psi PRIOR TO REMOVAL OF SHORING AND/OR INSTALLATION OF BEAMS AND PURLINS. (NOTE: A HIGHER COMPRESSIVE CONCRETE MAY BE USED TO ACHIEVE 1,000 psi SOONER. SUBMIT AN APPROVED CONCRETE MIX DESIGN TO JUSTIFY) OR 24 HRS WHICH COMES FIRST.
3. CONCRETE TO REACH 3,000 psi PRIOR TO INSTALLATION OF SOLAR PANELS. (NOTE: A HIGHER COMPRESSIVE CONCRETE MAY BE USED TO ACHIEVE 3,000 psi SOONER. SUBMIT AN APPROVED CONCRETE MIX DESIGN TO JUSTIFY).
4. REINFORCEMENT BARS SHALL BE ASTM A615, GR60, MINIMUM U.N.O.
5. MINIMUM CONCRETE COVER SHALL BE 2½" TO EARTH (DRILLED PIER FOUNDATIONS ONLY), 3" TO EARTH ALL OTHER CONCRETE, 2" TO SKY, PER CBC TABLE 1808A.8.2.
6. ALL REINFORCING STEEL AND OTHER EMBEDDED ITEMS SHALL BE SECURELY POSITIONED PRIOR TO THE POURING OF CONCRETE.
7. ALL CONCRETE WORK SHALL COMPLY WITH ACI 301 & 318 LATEST EDITION.
8. AGGREGATE GRADATION AND QUALITY SHALL BE IN ACCORDANCE WITH ACI 302-IR.
9. COLD JOINTS SHALL HAVE A ROUGHENED SURFACE, BONDING AGENT SHALL COMPLY WITH ASTM C1059. A SUBMITTAL FOR CONCRETE BONDING AGENT SHALL BE APPROVED BY DESIGN PROFESSIONAL IN RESPONSIBLE CHARGE PRIOR TO INSTALLATION. DSA INSPECTOR OF RECORD TO PERIODICALLY INSPECT INSTALLATION OF BONDING AGENT.
10. BATCH PLANT INSPECTION NOT REQUIRED PER CBC 1705A3.3.2. SUBJECT TO:
    - A LICENSED WEIGHMASTER SHALL POSITIVELY IDENTIFY QUANTITY OF MATERIALS AND CERTIFY EACH LOAD BY A BATCH TICKET.
    - BATCH TICKETS, INCLUDING MATERIAL QUANTITIES AND WEIGHTS SHALL ACCOMPANY THE LOAD, SHALL BE TRANSMITTED TO THE INSPECTOR OF RECORD BY THE TRUCK DRIVER WITH LOAD IDENTIFIED THEREON. THE LOAD SHALL NOT BE PLACED WITHOUT A BATCH TICKET IDENTIFYING THE MIX, THE INSPECTOR OF RECORD SHALL KEEP A DAILY RECORD OF PLACEMENTS, IDENTIFYING EACH TRUCK, ITS LOAD, AND TIME OF RECEIPT AT THE JOBSITE, AND APPROXIMATE LOCATION OF DEPOSIT IN THE STRUCTURE AND SHALL MAINTAIN A COPY OF THE DAILY RECORD AS REQUIRED BY THE ENFORCEMENT AGENCY.
11. CONCRETE MAY BE PUMPED, POURED, TAILGATED OR OTHER SUCH METHODS INTO PLACE. CONCRETE SHALL BE ALLOWED TO FREE FALL THE ENTIRE DEPTH OF THE FOUNDATION, AS INDICATED IN ACI 304R/09, CHAPTER 5. PLACEMENT OF ANY FREE-F ALL CONCRETE SHALL BE SUCH THAT THE CONCRETE DOES NOT ALTER THE EMBEDMENT DEPTH OR THE CLEARANCE OF THE REINFORCING BAR CAGE OR OTHER EMBEDDED MATERIALS.
12. CONCRETE SHALL MEET THE FOLLOWING MINIMUM REQUIREMENTS BASED ON EXPOSURE CLASS IN ACCORDANCE WITH ACI 318-19 TABLE 19.3.2.1 WHEN DETERMINED BY A SITE SPECIFIC GEOTECHNICAL REPORT. WHEN EXPOSURE CLASS NOT SPECIFIED, USE "NOT DETERMINED" AS PERMITTED BELOW.
13. AIR-ENTRAINED CONCRETE AT EXPOSURE CLASSES F1, F2 AND F3 SHALL MEET ACI 318-19 SECTION 19.3.3.

REQUIREMENTS FOR CONCRETE BASED ON EXPOSURE CLASS

USE	EXPOSURE CLASS ACI TABLE 19.3.1.1	MINIMUM CONCRETE STRENGTH f'_c	CEMENT TYPE ASTM C150	MAX. WATER/CEMENT RATIO W/M
☐	NOT DETERMINED	4,500 PSI	TYPE V	0.45
☒	F0, S0, W0, W1, C0, C1	4,000 PSI	TYPE II	N/A
☐	S1, W2	4,000 PSI	TYPE II	0.50
☐	C2, F3	5,000 PSI	TYPE V	0.40
☐	ALL OTHER	4,500 PSI	TYPE V	0.45

STEEL NOTES

1. COLD FORMED STEEL SIZES ARE BASED ON GAUGE THICKNESS.
2. PURLINS, BEAMS, POSTS (FRAMING MEMBERS) HAVE MIN. YIELD STRENGTHS AS INDICATED.
3. ZINC COATING OF STRUCTURAL STEEL SHALL CONFORM WITH G90 STANDARD OR BETTER COLD FORMED STEEL (CFS) MEMBERS TO BE GALVANIZED IN ACCORDANCE WITH ASTM A653 G90 STANDARD. HOLLOW STRUCTURAL STEEL (HSS) MEMBERS AND STEEL PLATES SHALL BE GALVANIZED IN ACCORDANCE WITH ASTM A123, UNLESS NOTED OTHERWISE.
4. ALL STEEL MEMBERS SHALL BE GALVANIZED OR PAINTED WITH ZINC-RICH PRIMER, UNDERCOAT AND FINISH COAT OR EQUIVALENT PAINT SYSTEM. CONTRACT DOCUMENTS SHALL SPECIFY THE TYPE OF SSPC CORROSION RESISTING SYSTEM TO BE UTILIZED AND THE SSPC GRADE FOR CLEANING, MINIMUM SSPC GRADE SP2.
5. STRUCTURAL STEEL SHALL BE HOT-DIP GALVANIZED (MINIMUM ASTM A123 OR A153, CLASS D) OR PAINTED WITH ZINC-RICH PRIMER, UNDERCOAT, AND FINISH COAT, OR EQUIVALENT PAINT SYSTEM. COLD-FORMED STEEL MEMBERS SHALL BE 55% ALUMINUM-ZINC ALLOY COATED PER ASTM A792/A792M STANDARD IN ACCORDANCE TO AISI S240 TABLE A4-1, CP 90 COATING DESIGNATION.
6. ALL EXPOSED STEEL FASTENERS, INCLUDING CAST IN PLACE ANCHOR BOLTS/RODS, SHALL BE STAINLESS STEEL (TYPE 304 MINIMUM), HOT-DIP GALVANIZED (ASTM A153, CLASS D MINIMUM OR ASTM F2329), OR PROTECTED WITH CORROSION-PREVENTIVE COATING THAT DEMONSTRATED NO MORE THAN 2% OF RED RUST IN MINIMUM 1,000 HOURS OF EXPOSURE IN SALT SPRAY TEST PER ASTM B117. ZINC-PLATED FASTENERS DO NOT COMPLY WITH THIS REQUIREMENT. (EXAMPLE PROPRIETARY COATINGS THAT COMPLY WITH THE 1000 HOUR REQUIREMENT INCLUDE BUT ARE NOT NECESSARILY LIMITED TO: QUIK GUARD BY SIMPSON, KWIK-COTE BY HILTI, STALGARD BY ELCO, VISTACORR BY SFS INTEC, ETC.)
7. ALL STEEL FABRICATION SHALL COMPLY WITH LATEST AISC SPECIFICATIONS.
8. ALL WELDING SHALL COMPLY WITH THE LATEST AWS D1.1. ALL WELD FILLER MATERIAL SHALL HAVE A MINIMUM CHARPY V-NOTCH (CVN) VALUE OF 20 FT-lbs AT A TEMPERATURE OF -20° F.
9. ALL BOLTS TO MEET OR EXCEED ASTM A307. NO BOLTING INSPECTIONS REQUIRED U.N.O.
10. ALL PLATES AND ANGLES TO BE ASTM A36 U.N.O.
11. ALL STRUCTURAL TUBING TO BE ASTM A1085 U.N.O.
12. ALL PURLINS TO BE ASTM A653 GR. 55
13. REPAIR ANY DAMAGED GALVANIZATION AFTER FIELD WELDS WITH AN APPROVED REPAIR METHOD.
14. ALL MEMBERS TO BE GALVANIZED OR PRIMED AND PAINTED IN ACCORDANCE WITH THE CONTRACT DOCUMENTS. ALL CONTRACT DOCUMENTS SHALL SPECIFY THE TYPE OF SSPC CORROSION RESISTING SYSTEM TO BE UTILIZED AND THE SSPC GRADE FOR CLEANING, MINIMUM SSPC GRADE SP2.
15. ALL BEAM TO COLUMN CONNECTIONS TO MEET WITH DETAILS 3 OR 4/S-10, 3 OR 4/S-15 FOR CORROSION PROTECTION.
16. ALL A307 BOLTS MAY BE SUBSTITUTED WITH THE SAME QUANTITY OF SAE J429 GRADE 2 BOLTS OF THE SAME DIAMETER.
17. A1085 STEEL HAS SAME OR BETTER PROPERTIES AND WELDABILITY THAN A500 GR. B.
18. BOLT HOLES FOR ½" Ø BOLTS SHALL BE 9/16" Ø.
19. BOLTS SHALL BE TIGHTENED TO SNUG-TIGHT CONDITION UNLESS NOTED OTHERWISE.
20. ALL BOLTS SHALL BE PROVIDED WITH A METHOD TO PREVENT NUTS FROM LOOSENING. SAMPLE ACCEPTABLE METHODS ARE: LOCK WASHERS, NYLOCK NUTS, BOLTS WITHOUT WASHERS WITH SERRATED NUTS, ND PATCH, LOCTITE, OTHER SIMILAR CHEMICAL LOCKING DEVICES, OR OTHER SIMILAR LOCKING DEVICES. ONLY ONE METHOD IS REQUIRED. CONTRACTOR TO IDENTIFY A METHOD IN ALL SUBMITTALS TO THE DESIGN PROFESSIONAL IN GENERAL RESPONSIBLE CHARGE.
21. ALL BOLTS IN THIS PC OTHER THAN THOSE SHOWN IN DETAILS 3/S-18, 4/S-18, 5/S-18, 7/S-18 DO NOT REQUIRE SPECIAL INSPECTION.
22. ALL HSS MEMBERS MAY BE SUBSTITUTED WITH AN ALTERNATE HSS MEMBER WITH EQUAL OR GREATER DIMENSIONS IN HEIGHT, WIDTH, AND THICKNESS. EXAMPLE HSS 12x8x½ MAY BE SUBSTITUTED WITH 12x8x5/8, OR 14x10x5/8, OR 16x12x5/8 OR OTHER MEMBER WITH A HEIGHT EQUAL TO OR GREATER THAN 12 INCHES WITH A WIDTH EQUAL TO OR GREATER THAN 8 INCHES WITH A WALL THICKNESS OF ½ INCH OR GREATER.
23. ALL HSS MEMBERS USING ASTM A1085 MATERIAL MAY SUBSTITUTE ASTM A500, GRADE B MATERIAL PROVIDED THE THICKNESS OF THE MEMBER IS INCREASED BY A MINIMUM OF 5/8".
24. BOLT HOLES IN THE PURLIN MEMBERS FOR THE PURLIN TO BEAM CONNECTIONS AND PURLIN SPLICES MAY BE OVERSIZED BY 1/8".
25. SPECIFIED SPECIAL INSPECTION FOR THREADED RODS USED FOR BRACING IS FOR MATERIAL ONLY. NO INSTALLATION INSPECTION IS REQUIRED.

SOILS NOTES

1. A SITE SPECIFIC GEOTECHNICAL REPORT IS REQUIRED.
2. THE GEOTECHNICAL ENGINEER SHALL REVIEW THE SITE CONDITIONS, TESTING RESULTS, ALL APPLICABLE ALLOWABLE INCREASES AND SPECIFY THE FINAL SOIL CLASS TO BE USED FROM THE TABLE BELOW. THE GEOTECHNICAL ENGINEER SHALL PROVIDE IN THE GEOTECHNICAL REPORT THE BASE VALUES WITHOUT INCREASE FOR MINIMUM 24" DIAMETER PIERS; THE ALLOWABLE VERTICAL END BEARING, ALLOWABLE LATERAL BEARING, ALLOWABLE DOWNWARD SKIN FRICTION AND ALLOWABLE SKIN FRICTION TO RESIST UPLIFT. FACTORS OF SAFETY USED FOR THESE BASE VALUES ARE TO BE CLEARLY IDENTIFIED. THE GEOTECHNICAL ENGINEER SHALL ALSO PROVIDE ANY ALLOWABLE INCREASES TO THE BASE VALUES. POSSIBLE ALLOWABLE INCREASES TO BE CONFIRMED BY THE GEOTECHNICAL ENGINEER ARE: DOUBLE LATERAL BEARING VALUES DUE TO ISOLATED FOUNDATIONS, DOUBLE LATERAL BEARING VALUES DUE TO THE STRUCTURE NOT BEING ADVERSELY AFFECTED BY 1/2" DEFLECTION AT THE SURFACE, A 4/3 INCREASE DUE TO SHORT TERM LOADING AND ANY OTHER ALLOWABLE INCREASES. THE GEOTECHNICAL ENGINEER SHALL MAKE RECOMMENDATION FOR THE SOIL CLASS TO BE USED AFTER ALL INCREASES HAVE BEEN APPLIED, WHERE ALLOWED PER THE 2022 CBC LOAD COMBINATIONS. ALL FOUNDATIONS HAVE BEEN DESIGNED BASED ON THE VALUES PRESENTED IN THE TABLE BELOW. THE GEOTECHNICAL REPORT SHALL ADDRESS IF THE USE OF STEEL CASING THAT IS TWISTED INTO PLACE AND LEFT INSTALLED AFFECTS ANY ALLOWABLE VALUES.
3. THE GEOTECHNICAL ENGINEER MAY SPECIFY DIFFERENT SOILS CLASSES TO BE USED FOR THE DIFFERENT STRUCTURE TYPES (T OR OT), DIFFERENT AREAS OF THE SITE (I.E. NORTH LOT OR WEST LOT), OR THE ENGINEER MAY SPECIFY ONE SOILS CLASS TO BE USED FOR THE ENTIRE SITE.
4. THE GEOTECHNICAL ENGINEER SHALL ADDRESS IN THE REPORT ANY CONCRETE DURABILITY REQUIREMENTS IN ACCORDANCE WITH ACI 318-19 CHAPTER 4.
5. THE GEOTECHNICAL REPORT SHALL BE SPECIFIC TO THE LOCATION OF THE PHOTOVOLTAIC STRUCTURES. BORING(S) SHALL BE DONE AT THE SPECIFIC LOCATION(S) WHERE THE PHOTOVOLTAIC STRUCTURES ARE TO OCCUR. THE GEOTECHNICAL REPORT SHALL CONFORM TO 2022 CBC SECTION 1803A.
6. GEOTECHNICAL ENGINEER SHALL IDENTIFY THE LOCATION WHERE "USABLE SOIL" STARTS WHICH IS ALLOWED TO BE AT GRADE OR DEEPER IF NECESSARY. SEE DETAILS 2/S-6, 2/S-11, 3/S-11,
7. A COPY OF THE GEOTECHNICAL REPORT SHALL BE PROVIDED AT THE TIME OF PLAN REVIEW.
8. AT THE TIME OF PLAN REVIEW, THE STRUCTURAL ENGINEER OF RECORD SHALL SELECT A SOILS CLASS ON THE SITE-SPECIFIC PLANS BASED ON THE GEOTECHNICAL REPORT.
9. DESIGN OF PC STRUCTURE ASSUMES A MAXIMUM LATERAL DISPLACEMENT OF 1/2" AT THE BASE; ALLOWABLE LATERAL BEARING VALUES THAT RESULT IN LARGER DISPLACEMENTS ARE NOT ACCEPTABLE FOR USE WITH THIS PC STRUCTURE
10. MAXIMUM COLUMN HEIGHT AND FOUNDATION DEPTH FOR STRUCTURES LOCATED ADJACENT TO SLOPES SHALL BE MEASURED FROM A PROJECTED HORIZONTAL LINE OF 7d FROM THE FACE OF THE SLOPE AS SHOWN BELOW:

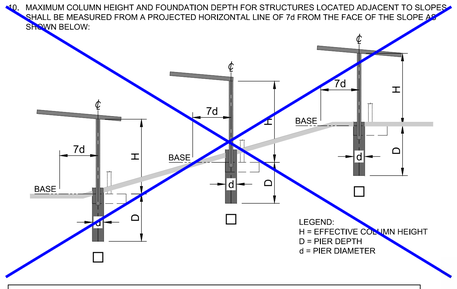

PIER FOUNDATIONS - FINAL DESIGN VALUES [1,2,3]

USE	SOILS CLASS	MIN. ALLOWABLE END BEARING (psf)	MIN. ALLOWABLE LATERAL BEARING (psf/ft)	MAX. LATERAL BEARING (psf)	MIN. ALLOWABLE SKIN FRICTION DOWN (psf)	MIN. ALLOWABLE SKIN FRICTION UP (psf)
☒	CLASS W	0	267	4,000	250	125
☐	CLASS X	0	400	6,000	365	162.5
☐	CLASS Y	0	533	8,000	365	175
☐	CLASS Z	0	800	12,000	425	212.5

SPREAD FOOTINGS - FINAL DESIGN VALUES [1,2,3]

USE	SOILS CLASS	MIN. ALLOWABLE END BEARING (psf)	MIN. ALLOWABLE LATERAL BEARING (psf/ft)	MAX. LATERAL BEARING (psf)	SLIDING FRICTION μ
☐	ALL	1,500	100	2,000	0.25

NOTES:
1. TABLE ALREADY TAKES INTO ACCOUNT 1/3 INCREASE AND DOUBLING OF THE PASSIVE PRESSURE WITHOUT ANY FURTHER INCREASES. GEOTECHNICAL ENGINEER IS REQUIRED TO SPECIFY THE SOILS CLASS WHERE FINAL VALUES WITH INCREASES ARE NOT ALLOWED TO EXCEED THESE VALUES)
2. DOUBLING THE PASSIVE PRESSURE DUE TO SOIL ARCHING EFFECTS IS NOT ALLOWED IN CONJUNCTION WITH DOUBLING BASED ON THE 1/2" DEFLECTION AT THE SURFACE.
3. THE FOUNDATION DESIGNS FOR THIS PC ARE BASED ON 2022 CBC ALTERNATE BASIC LOAD COMBINATIONS PER SECTION 1605A.3.2 WHERE 1/3 INCREASES ARE ALLOWED.

4 STEL ENGINEERING
26030 ACERO
MISSION VIEJO, CA 92691
949.305.1150 | FAX 949.305.1420

MBAR C CONSTRUCTION INC.
1709 LA COSTA MEADOWS DRIVE
SAN MARCOS, CA 92078
ERIK KRVOKOPICH
PHONE: (760) 746-4131
FAX: (760) 746-4457
ERIK@MBARCONLINE.COM
LIC # B-879A2
B, ASC-121
(770) 787-9445

ENGINEER'S APPROVAL

REGISTERED PROFESSIONAL ENGINEER
DUSTIN K. REDEKOP
S 5885
CIVIL
STATE OF CALIFORNIA

BID INFORMATION
THE STRUCTURES AND DESIGNS IN THIS PC ARE PROPRIETARY TO M BAR C CONSTRUCTION, INC. AND 4 S.T.E.L. ENGINEERING, INC. ALL SITES USING THIS PC: M BAR C CONSTRUCTION, INC. SHALL BE THE STEEL CONTRACTOR & 4 S.T.E.L. ENGINEERING, INC. SHALL BE THE SEOR. SEE THE STANDARD NOTES FOR PC USE ON S-1 FOR ADDITIONAL REQUIREMENTS.

PRE-CHECK (PC) DOCUMENT
CODE: 2022 CBC
A SEPARATE PROJECT APPLICATION FOR CONSTRUCTION IS REQUIRED

APPROVED
DIV. OF THE STATE ARCHITECT
APP: 04-123080 PC
REVIEWED FOR
SS ☑ FLS ☑ ACS ☑ CG ☐
DATE: 11/25/2024

SITE SPECIFIC INFORMATION
VISALIA CAMPUS UNIV. CENTER
COLLEGE OF THE SEQUOIAS
915 S. MOONEY BLVD.
VISALIA, CA 93277

REVISIONS

MARK	DATE	DESCRIPTION

UG 22.1.1

4 STEL JOB #	MC02-V3-1-1
DATE	11-18-24
DRAWN BY	GM
CHECKED	RWS

GENERAL NOTES

S-3

DRAWINGS, SPECIFICATIONS AND OTHER DOCUMENTS, PREPARED BY THE DESIGN PROFESSIONAL (DP) AND THE DP'S CONSULTANTS ARE INSTRUMENTS OF SERVICE FOR USE SOLELY WITH RESPECT TO THIS PROJECT. THIS INCLUDES DOCUMENTS IN ELECTRONIC FORM. THE DP AND THE DP'S CONSULTANTS SHALL BE DEEMED THE AUTHORS AND OWNERS OF THEIR RESPECTIVE INSTRUMENTS OF SERVICE AND SHALL RETAIN ALL COMMON LAW, STATUTORY AND OTHER RESERVED RIGHTS, INCLUDING COPYRIGHTS. THE INSTRUMENTS OF SERVICE SHALL NOT BE USED BY THE OWNER FOR FUTURE ADDITIONS OR ALTERATIONS TO THIS PROJECT OR FOR OTHER PROJECTS, WITHOUT THE PRIOR WRITTEN AGREEMENT OF THE DP. ANY UNAUTHORIZED USE OF THE INSTRUMENTS OF SERVICE SHALL BE AT THE OWNER'S SOLE RISK AND WITHOUT LIABILITY TO THE DP AND TH

IDENTIFICATION STAMP
DIV. OF THE STATE ARCHITECT
APP: 02-122821 INC: 2
REVIEWED FOR
SS ☑ FLS ☑ ACS ☑
DATE: 11/20/2025

DSA 103-22: LISTING OF STRUCTURAL TESTS & SPECIAL INSPECTIONS, 2022 CBC

Application Number: 04-122152
School Name: Ultimate Guardian PC-22.1
School District: N/A
DSA File Number: PC-61
- Spread Footing Only with Post Installed Anchors
Increment Number:
Date Created: 2023-04-06

Geotechnical Reports: Project has a geotechnical report, or CDs indicate soils special inspection is required by GE

	Test or Special Inspection	Type	Performed By	Code References and Notes
	S1. GENERAL:			
☑	a. Verify that: • Site has been prepared properly prior to placement of controlled fill and/or excavations for foundations. • Foundation excavations are extended to proper depth and have reached proper material. • Materials below footings are adequate to achieve the design bearing capacity.	Periodic	GE*	* By geotechnical engineer or his or her qualified representative. (See Appendix (end of this form) form for exemptions.)
	C1. CAST-IN-PLACE CONCRETE			
☑	a. Verify use of required design mix.	Periodic	SI	Table 1705A.3 Item 5, 1910A.1.
☑	b. Identify, sample, and test reinforcing steel.	Test	LOR	1910A.2; ACI 318-19 Ch.20 and Section 26.6.1.2; DSA IR 17-10. (See Appendix (end of this form) for exemptions.)
☑	c. During concrete placement, fabricate specimens for strength tests, perform slump and air content tests, and determine the temperature of the concrete.	Test	LOR	Table 1705A.3 Item 6; ACI 318-19 Sections 26.5 & 26.12.
☑	d. Test concrete (f'c).	Test	LOR	1905A.1.17; ACI 318-19 Section 26.12.
	C5. POST-INSTALLED ANCHORS:			
☑	a. Inspect installation of post-installed anchors	See Notes	SI*	1617A.1.19, Table 1705A.3 Item 4a (Continuous) & 4b (Periodic), 1705A.3.8 (See Appendix (end of this form) for exemptions). ACI 318-14 Sections 17.8 & 26.13. * May be performed by the project inspector when specifically approved by DSA.
☑	b. Test post-installed anchors.	Test	LOR	1910A.5. (See Appendix (end of this form) for exemptions.)
	S/A1. STRUCTURAL STEEL, COLD-FORMED STEEL AND ALUMINUM USED FOR STRUCTURAL PURPOSES			
☑	a. Verify identification of all materials and: • Mill certificates indicate material properties that comply with requirements. • Material sizes, types and grades comply with requirements.	Periodic	*	Table 1705A.2.1 Item 3a–3c. 2202A.1; AISI S100-20 Section A3.1 & A3.2, AISI S240-20 Section A3 & A5, AISI S220-20 Sections A4 & A6. * By special inspector or qualified technician when performed off-site.
☑	b. Test unidentified materials	Test	LOR	2202A.1.
☑	c. Examine seam welds of HSS shapes	Periodic	SI	DSA IR 17-3.
☑	d. Verify and document steel fabrication per DSA-approved construction documents.	Periodic	SI	Not applicable to cold-formed steel light-frame construction, except for trusses (1705A.2.4).
	S/A3. WELDING:			
☑	a. Verify weld filler material identification markings per AWS designation listed on the DSA-approved documents and the WPS.	Periodic	SI	1705A.2.5, Table 1705A.2.1 Items 4 & 5: AWS D1.1 and AWS D1.8 for structural steel; AWS D1.2 for Aluminum; AWS D1.3 for cold-formed steel; AWS D1.4 for reinforcing steel; DSA IR 17-3.
☑	b. Verify weld filler material manufacturer's certificate of compliance.	Periodic	SI	DSA IR 17-3.
☑	c. Verify WPS, welder qualifications and equipment.	Periodic	SI	DSA IR 17-3.
	S/A4. SHOP WELDING (IN ADDITION TO SECTION S/A3):			
☑	a. Inspect groove welds, multi-pass fillet welds, single pass fillet welds > 5/16", plug and slot welds.	Continuous	SI	Table 1705A.2.1 Items 5a.1–4; AISC 360-16 (and AISC 341-16 as applicable); DSA IR 17-3.
☑	b. Inspect single-pass fillet welds ≤ 5/16", floor and roof deck welds.	Periodic	SI	1705A.2.2, Table 1705A.2.1 Items 5a.5 & 5a.6; AISC 360-16 (and AISC 341-16 as applicable); DSA IR 17-3.
	S/A5. FIELD WELDING (IN ADDITION TO SECTION S/A3):			
☑	a. Inspect groove welds, multi-pass fillet welds, single pass fillet welds > 5/16", plug and slot welds.	Continuous	SI	Table 1705A.2.1 Items 5a.1–4; AISC 360-16 (AISC 341-16 as applicable); DSA IR 17-3.
☑	b. Inspect single-pass fillet welds ≤ 5/16".	Periodic	SI	Table 1705A.2.1 Item 5a.5; AISC 360-16 (AISC 341-16 as applicable); DSA IR 17-3.
	S/A9. ANCHOR BOLTS AND ANCHOR RODS:			
☑	b. Threaded rod not used for foundation anchorage.	Test	LOR	Identify, sample and test threaded rods **not** meeting exemptions identified in Section 1 of IR 17-11.
	X1. OTHER:			
☑	c. SOLAR PANEL ATTACHMENT	Continuous	LOR	Pre-tension bolt connections and calibration of test equipment
☑	d. SOLAR PANEL ATTACHMENT BOLTS	Test	LOR	Bolts shall be identified, sampled, and tested in accordance with DSA IR 17-8.19

1. Soils Testing and Inspection: Geotechnical Verified Report Form DSA 293
2. Structural Testing and Inspection: Laboratory Verified Report Form DSA 291
3. Post-installed Anchors: Laboratory Verified Report Form DSA 291, or, for independently contracting SI, Special Inspection Verified Report Form DSA 292
4. Shop Welding Inspection: Laboratory Verified Report Form DSA 291, or, for independently contracting SI, Special Inspection Verified Report Form DSA 292
5. Field Welding Inspection: Laboratory Verified Report Form DSA 291, or, for independently contracting SI, Special Inspection Verified Report Form DSA 292

5 / - SAMPLE DSA-103 - STRUCTURES WITH ONLY SPREAD FOUNDATIONS WITH POST INSTALLED ANCHORS

DSA 103-22: LISTING OF STRUCTURAL TESTS & SPECIAL INSPECTIONS, 2022 CBC

Application Number: 04-122152
School Name: Ultimate Guardian PC-22.1
School District: N/A
DSA File Number: PC-61
- Pier and Pad Footing without Post Installed Anchors
Increment Number:
Date Created: 2023-04-06

Geotechnical Reports: Project has a geotechnical report, or CDs indicate soils special inspection is required by GE

	Test or Special Inspection	Type	Performed By	Code References and Notes
	S1. GENERAL:			
☑	a. Verify that: • Site has been prepared properly prior to placement of controlled fill and/or excavations for foundations. • Foundation excavations are extended to proper depth and have reached proper material. • Materials below footings are adequate to achieve the design bearing capacity.	Periodic	GE*	* By geotechnical engineer or his or her qualified representative. (See Appendix (end of this form) form for exemptions.)
	S4. CAST-IN-PLACE DEEP FOUNDATIONS (PIERS):			
☑	a. Inspect drilling operations and maintain complete and accurate records for each pier.	Continuous	GE*	* By geotechnical engineer or his or her qualified representative. (See Appendix (end of this form) for exemptions.)
☑	b. Verify pier locations, diameters, plumbness, bell diameters (if applicable), lengths and embedment into bedrock (if applicable); record concrete or grout volumes.	Continuous	GE*	* By geotechnical engineer or his or her qualified representative. (See Appendix (end of this form) for exemptions.)
☑	c. Confirm adequate end strata bearing capacity.	Continuous	GE*	* By geotechnical engineer or his or her qualified representative. (See Appendix (end of this form) for exemptions.)
☑	d. Concrete piers.	Provide tests and inspections per CONCRETE section below.		
	C1. CAST-IN-PLACE CONCRETE			
☑	a. Verify use of required design mix.	Periodic	SI	Table 1705A.3 Item 5, 1910A.1.
☑	b. Identify, sample, and test reinforcing steel.	Test	LOR	1910A.2; ACI 318-19 Ch.20 and Section 26.6.1.2; DSA IR 17-10. (See Appendix (end of this form) for exemptions.)
☑	c. During concrete placement, fabricate specimens for strength tests, perform slump and air content tests, and determine the temperature of the concrete.	Test	LOR	Table 1705A.3 Item 6; ACI 318-19 Sections 26.5 & 26.12.
☑	d. Test concrete (f'c).	Test	LOR	1905A.1.17; ACI 318-19 Section 26.12.
	S/A1. STRUCTURAL STEEL, COLD-FORMED STEEL AND ALUMINUM USED FOR STRUCTURAL PURPOSES			
☑	a. Verify identification of all materials and: • Mill certificates indicate material properties that comply with requirements. • Material sizes, types and grades comply with requirements.	Periodic	*	Table 1705A.2.1 Item 3a–3c. 2202A.1; AISI S100-20 Section A3.1 & A3.2, AISI S240-20 Section A3 & A5, AISI S220-20 Sections A4 & A6. * By special inspector or qualified technician when performed off-site.
☑	b. Test unidentified materials	Test	LOR	2202A.1.
☑	c. Examine seam welds of HSS shapes	Periodic	SI	DSA IR 17-3.
☑	d. Verify and document steel fabrication per DSA-approved construction documents.	Periodic	SI	Not applicable to cold-formed steel light-frame construction, except for trusses (1705A.2.4).
	S/A3. WELDING:			
☑	a. Verify weld filler material identification markings per AWS designation listed on the DSA-approved documents and the WPS.	Periodic	SI	1705A.2.5, Table 1705A.2.1 Items 4 & 5: AWS D1.1 and AWS D1.8 for structural steel; AWS D1.2 for Aluminum; AWS D1.3 for cold-formed steel; AWS D1.4 for reinforcing steel; DSA IR 17-3.
☑	b. Verify weld filler material manufacturer's certificate of compliance.	Periodic	SI	DSA IR 17-3.
☑	c. Verify WPS, welder qualifications and equipment.	Periodic	SI	DSA IR 17-3.
	S/A4. SHOP WELDING (IN ADDITION TO SECTION S/A3):			
☑	a. Inspect groove welds, multi-pass fillet welds, single pass fillet welds > 5/16", plug and slot welds.	Continuous	SI	Table 1705A.2.1 Items 5a.1–4; AISC 360-16 (and AISC 341-16 as applicable); DSA IR 17-3.
☑	b. Inspect single-pass fillet welds ≤ 5/16", floor and roof deck welds.	Periodic	SI	1705A.2.2, Table 1705A.2.1 Items 5a.5 & 5a.6; AISC 360-16 (and AISC 341-16 as applicable); DSA IR 17-3.
	S/A5. FIELD WELDING (IN ADDITION TO SECTION S/A3):			
☑	a. Inspect groove welds, multi-pass fillet welds, single pass fillet welds > 5/16", plug and slot welds.	Continuous	SI	Table 1705A.2.1 Items 5a.1–4; AISC 360-16 (AISC 341-16 as applicable); DSA IR 17-3.
☑	b. Inspect single-pass fillet welds ≤ 5/16".	Periodic	SI	Table 1705A.2.1 Item 5a.5; AISC 360-16 (AISC 341-16 as applicable); DSA IR 17-3.
	S/A9. ANCHOR BOLTS AND ANCHOR RODS:			
☑	b. Threaded rod not used for foundation anchorage.	Test	LOR	Identify, sample and test threaded rods **not** meeting exemptions identified in Section 1 of IR 17-11.
	X1. OTHER:			
☑	c. SOLAR PANEL ATTACHMENT	Continuous	LOR	Pre-tension bolt connections and calibration of test equipment
☑	d. SOLAR PANEL ATTACHMENT BOLTS	Test	LOR	Bolts shall be identified, sampled, and tested in accordance with DSA IR 17-8.19

1. Soils Testing and Inspection: Geotechnical Verified Report Form DSA 293
2. Structural Testing and Inspection: Laboratory Verified Report Form DSA 291
3. Post-installed Anchors: Laboratory Verified Report Form DSA 291, or, for independently contracting SI, Special Inspection Verified Report Form DSA 292
4. Shop Welding Inspection: Laboratory Verified Report Form DSA 291, or, for independently contracting SI, Special Inspection Verified Report Form DSA 292

4 / - SAMPLE DSA-103 - STRUCTURES WITH PIER & SPREAD FOUNDATIONS WITHOUT POST INSTALLED ANCHORS

DSA 103-22: LISTING OF STRUCTURAL TESTS & SPECIAL INSPECTIONS, 2022 CBC

Application Number: 04-122152
School Name: Ultimate Guardian PC-22.1
School District: N/A
DSA File Number: PC-61
- Pier & Spread Footing with Post Installed Anchors
Increment Number:
Date Created: 2023-04-06

Geotechnical Reports: Project has a geotechnical report, or CDs indicate soils special inspection is required by GE

	Test or Special Inspection	Type	Performed By	Code References and Notes
	S1. GENERAL:			
☑	a. Verify that: • Site has been prepared properly prior to placement of controlled fill and/or excavations for foundations. • Foundation excavations are extended to proper depth and have reached proper material. • Materials below footings are adequate to achieve the design bearing capacity.	Periodic	GE*	* By geotechnical engineer or his or her qualified representative. (See Appendix (end of this form) form for exemptions.)
	S4. CAST-IN-PLACE DEEP FOUNDATIONS (PIERS):			
☑	a. Inspect drilling operations and maintain complete and accurate records for each pier.	Continuous	GE*	* By geotechnical engineer or his or her qualified representative. (See Appendix (end of this form) for exemptions.)
☑	b. Verify pier locations, diameters, plumbness, bell diameters (if applicable), lengths and embedment into bedrock (if applicable); record concrete or grout volumes.	Continuous	GE*	* By geotechnical engineer or his or her qualified representative. (See Appendix (end of this form) for exemptions.)
☑	c. Confirm adequate end strata bearing capacity.	Continuous	GE*	* By geotechnical engineer or his or her qualified representative. (See Appendix (end of this form) for exemptions.)
☑	d. Concrete piers.	Provide tests and inspections per CONCRETE section below.		
	C1. CAST-IN-PLACE CONCRETE			
☑	a. Verify use of required design mix.	Periodic	SI	Table 1705A.3 Item 5, 1910A.1.
☑	b. Identify, sample, and test reinforcing steel.	Test	LOR	1910A.2; ACI 318-19 Ch.20 and Section 26.6.1.2; DSA IR 17-10. (See Appendix (end of this form) for exemptions.)
☑	c. During concrete placement, fabricate specimens for strength tests, perform slump and air content tests, and determine the temperature of the concrete.	Test	LOR	Table 1705A.3 Item 6; ACI 318-19 Sections 26.5 & 26.12.
☑	d. Test concrete (f'c).	Test	LOR	1905A.1.17; ACI 318-19 Section 26.12.
	C5. POST-INSTALLED ANCHORS:			
☑	a. Inspect installation of post-installed anchors	See Notes	SI*	1617A.1.19, Table 1705A.3 Item 4a (Continuous) & 4b (Periodic), 1705A.3.8 (See Appendix (end of this form) for exemptions). ACI 318-14 Sections 17.8 & 26.13. * May be performed by the project inspector when specifically approved by DSA.
☑	b. Test post-installed anchors.	Test	LOR	1910A.5. (See Appendix (end of this form) for exemptions.)
	S/A1. STRUCTURAL STEEL, COLD-FORMED STEEL AND ALUMINUM USED FOR STRUCTURAL PURPOSES			
☑	a. Verify identification of all materials and: • Mill certificates indicate material properties that comply with requirements. • Material sizes, types and grades comply with requirements.	Periodic	*	Table 1705A.2.1 Item 3a–3c. 2202A.1; AISI S100-20 Section A3.1 & A3.2, AISI S240-20 Section A3 & A5, AISI S220-20 Sections A4 & A6. * By special inspector or qualified technician when performed off-site.
☑	b. Test unidentified materials	Test	LOR	2202A.1.
☑	c. Examine seam welds of HSS shapes	Periodic	SI	DSA IR 17-3.
☑	d. Verify and document steel fabrication per DSA-approved construction documents.	Periodic	SI	Not applicable to cold-formed steel light-frame construction, except for trusses (1705A.2.4).
	S/A3. WELDING:			
☑	a. Verify weld filler material identification markings per AWS designation listed on the DSA-approved documents and the WPS.	Periodic	SI	1705A.2.5, Table 1705A.2.1 Items 4 & 5: AWS D1.1 and AWS D1.8 for structural steel; AWS D1.2 for Aluminum; AWS D1.3 for cold-formed steel; AWS D1.4 for reinforcing steel; DSA IR 17-3.
☑	b. Verify weld filler material manufacturer's certificate of compliance.	Periodic	SI	DSA IR 17-3.
☑	c. Verify WPS, welder qualifications and equipment.	Periodic	SI	DSA IR 17-3.
	S/A4. SHOP WELDING (IN ADDITION TO SECTION S/A3):			
☑	a. Inspect groove welds, multi-pass fillet welds, single pass fillet welds > 5/16", plug and slot welds.	Continuous	SI	Table 1705A.2.1 Items 5a.1–4; AISC 360-16 (and AISC 341-16 as applicable); DSA IR 17-3.
☑	b. Inspect single-pass fillet welds ≤ 5/16", floor and roof deck welds.	Periodic	SI	1705A.2.2, Table 1705A.2.1 Items 5a.5 & 5a.6; AISC 360-16 (and AISC 341-16 as applicable); DSA IR 17-3.
	S/A5. FIELD WELDING (IN ADDITION TO SECTION S/A3):			
☑	a. Inspect groove welds, multi-pass fillet welds, single pass fillet welds > 5/16", plug and slot welds.	Continuous	SI	Table 1705A.2.1 Items 5a.1–4; AISC 360-16 (AISC 341-16 as applicable); DSA IR 17-3.
☑	b. Inspect single-pass fillet welds ≤ 5/16".	Periodic	SI	Table 1705A.2.1 Item 5a.5; AISC 360-16 (AISC 341-16 as applicable); DSA IR 17-3.
	S/A9. ANCHOR BOLTS AND ANCHOR RODS:			
☑	b. Threaded rod not used for foundation anchorage.	Test	LOR	Identify, sample and test threaded rods **not** meeting exemptions identified in Section 1 of IR 17-11.
	X1. OTHER:			
☑	c. SOLAR PANEL ATTACHMENT	Continuous	LOR	Pre-tension bolt connections and calibration of test equipment
☑	d. SOLAR PANEL ATTACHMENT BOLTS	Test	LOR	Bolts shall be identified, sampled, and tested in accordance with DSA IR 17-8.19

1. Soils Testing and Inspection: Geotechnical Verified Report Form DSA 293
2. Structural Testing and Inspection: Laboratory Verified Report Form DSA 291
3. Post-installed Anchors: Laboratory Verified Report Form DSA 291, or, for independently contracting SI, Special Inspection Verified Report Form DSA 292
4. Shop Welding Inspection: Laboratory Verified Report Form DSA 291, or, for independently contracting SI, Special Inspection Verified Report Form DSA 292
5. Field Welding Inspection: Laboratory Verified Report Form DSA 291, or, for independently contracting SI, Special Inspection Verified Report Form DSA 292

3 / - SAMPLE DSA-103 - STRUCTURES WITH PIER & SPREAD FOUNDATIONS WITH POST INSTALLED ANCHORS

DSA 103-22: LISTING OF STRUCTURAL TESTS & SPECIAL INSPECTIONS, 2022 CBC

Application Number: 04-122152
School Name: Ultimate Guardian PC-22.1
School District: N/A
DSA File Number: PC-61
- Pier Footing without Post Installed Anchors
Increment Number:
Date Created: 2023-04-06

Geotechnical Reports: Project has a geotechnical report, or CDs indicate soils special inspection is required by GE

	Test or Special Inspection	Type	Performed By	Code References and Notes
	S1. GENERAL:			
☑	a. Verify that: • Site has been prepared properly prior to placement of controlled fill and/or excavations for foundations. • Foundation excavations are extended to proper depth and have reached proper material. • Materials below footings are adequate to achieve the design bearing capacity.	Periodic	GE*	* By geotechnical engineer or his or her qualified representative. (See Appendix (end of this form) form for exemptions.)
	S4. CAST-IN-PLACE DEEP FOUNDATIONS (PIERS):			
☑	a. Inspect drilling operations and maintain complete and accurate records for each pier.	Continuous	GE*	* By geotechnical engineer or his or her qualified representative. (See Appendix (end of this form) for exemptions.)
☑	b. Verify pier locations, diameters, plumbness, bell diameters (if applicable), lengths and embedment into bedrock (if applicable); record concrete or grout volumes.	Continuous	GE*	* By geotechnical engineer or his or her qualified representative. (See Appendix (end of this form) for exemptions.)
☑	c. Confirm adequate end strata bearing capacity.	Continuous	GE*	* By geotechnical engineer or his or her qualified representative. (See Appendix (end of this form) for exemptions.)
☑	d. Concrete piers.	Provide tests and inspections per CONCRETE section below.		
	C1. CAST-IN-PLACE CONCRETE			
☑	a. Verify use of required design mix.	Periodic	SI	Table 1705A.3 Item 5, 1910A.1.
☑	b. Identify, sample, and test reinforcing steel.	Test	LOR	1910A.2; ACI 318-19 Ch.20 and Section 26.6.1.2; DSA IR 17-10. (See Appendix (end of this form) for exemptions.)
☑	c. During concrete placement, fabricate specimens for strength tests, perform slump and air content tests, and determine the temperature of the concrete.	Test	LOR	Table 1705A.3 Item 6; ACI 318-19 Sections 26.5 & 26.12.
☑	d. Test concrete (f'c).	Test	LOR	1905A.1.17; ACI 318-19 Section 26.12.
	S/A1. STRUCTURAL STEEL, COLD-FORMED STEEL AND ALUMINUM USED FOR STRUCTURAL PURPOSES			
☑	a. Verify identification of all materials and: • Mill certificates indicate material properties that comply with requirements. • Material sizes, types and grades comply with requirements.	Periodic	*	Table 1705A.2.1 Item 3a–3c. 2202A.1; AISI S100-20 Section A3.1 & A3.2, AISI S240-20 Section A3 & A5, AISI S220-20 Sections A4 & A6. * By special inspector or qualified technician when performed off-site.
☑	b. Test unidentified materials	Test	LOR	2202A.1.
☑	c. Examine seam welds of HSS shapes	Periodic	SI	DSA IR 17-3.
☑	d. Verify and document steel fabrication per DSA-approved construction documents.	Periodic	SI	Not applicable to cold-formed steel light-frame construction, except for trusses (1705A.2.4).
	S/A3. WELDING:			
☑	a. Verify weld filler material identification markings per AWS designation listed on the DSA-approved documents and the WPS.	Periodic	SI	1705A.2.5, Table 1705A.2.1 Items 4 & 5: AWS D1.1 and AWS D1.8 for structural steel; AWS D1.2 for Aluminum; AWS D1.3 for cold-formed steel; AWS D1.4 for reinforcing steel; DSA IR 17-3.
☑	b. Verify weld filler material manufacturer's certificate of compliance.	Periodic	SI	DSA IR 17-3.
☑	c. Verify WPS, welder qualifications and equipment.	Periodic	SI	DSA IR 17-3.
	S/A4. SHOP WELDING (IN ADDITION TO SECTION S/A3):			
☑	a. Inspect groove welds, multi-pass fillet welds, single pass fillet welds > 5/16", plug and slot welds.	Continuous	SI	Table 1705A.2.1 Items 5a.1–4; AISC 360-16 (and AISC 341-16 as applicable); DSA IR 17-3.
☑	b. Inspect single-pass fillet welds ≤ 5/16", floor and roof deck welds.	Periodic	SI	1705A.2.2, Table 1705A.2.1 Items 5a.5 & 5a.6; AISC 360-16 (and AISC 341-16 as applicable); DSA IR 17-3.
	S/A5. FIELD WELDING (IN ADDITION TO SECTION S/A3):			
☑	a. Inspect groove welds, multi-pass fillet welds, single pass fillet welds > 5/16", plug and slot welds.	Continuous	SI	Table 1705A.2.1 Items 5a.1–4; AISC 360-16 (AISC 341-16 as applicable); DSA IR 17-3.
☑	b. Inspect single-pass fillet welds ≤ 5/16".	Periodic	SI	Table 1705A.2.1 Item 5a.5; AISC 360-16 (AISC 341-16 as applicable); DSA IR 17-3.
	S/A9. ANCHOR BOLTS AND ANCHOR RODS:			
☑	b. Threaded rod not used for foundation anchorage.	Test	LOR	Identify, sample and test threaded rods **not** meeting exemptions identified in Section 1 of IR 17-11.
	X1. OTHER:			
☑	c. SOLAR PANEL ATTACHMENT	Continuous	LOR	Pre-tension bolt connections and calibration of test equipment
☑	d. SOLAR PANEL ATTACHMENT BOLTS	Test	LOR	Bolts shall be identified, sampled, and tested in accordance with DSA IR 17-8.19

1. Soils Testing and Inspection: Geotechnical Verified Report Form DSA 293
2. Structural Testing and Inspection: Laboratory Verified Report Form DSA 291
3. Post-installed Anchors: Laboratory Verified Report Form DSA 291, or, for independently contracting SI, Special Inspection Verified Report Form DSA 292
4. Shop Welding Inspection: Laboratory Verified Report Form DSA 291, or, for independently contracting SI, Special Inspection Verified Report Form DSA 292

2 / - SAMPLE DSA-103 - STRUCTURES WITH ONLY PIER FOUNDATIONS WITHOUT POST INSTALLED ANCHORS

DSA 103-22: LISTING OF STRUCTURAL TESTS & SPECIAL INSPECTIONS, 2022 CBC

Application Number: 04-122152
School Name: Ultimate Guardian PC-22.1
School District: N/A
DSA File Number: PC-61
- Spread Footing without Post Installed Anchors
Increment Number:
Date Created: 2023-04-06

Geotechnical Reports: Project has a geotechnical report, or CDs indicate soils special inspection is required by GE

	Test or Special Inspection	Type	Performed By	Code References and Notes
	S1. GENERAL:			
☑	a. Verify that: • Site has been prepared properly prior to placement of controlled fill and/or excavations for foundations. • Foundation excavations are extended to proper depth and have reached proper material. • Materials below footings are adequate to achieve the design bearing capacity.	Periodic	GE*	* By geotechnical engineer or his or her qualified representative. (See Appendix (end of this form) form for exemptions.)
	C1. CAST-IN-PLACE CONCRETE			
☑	a. Verify use of required design mix.	Periodic	SI	Table 1705A.3 Item 5, 1910A.1.
☑	b. Identify, sample, and test reinforcing steel.	Test	LOR	1910A.2; ACI 318-19 Ch.20 and Section 26.6.1.2; DSA IR 17-10. (See Appendix (end of this form) for exemptions.)
☑	c. During concrete placement, fabricate specimens for strength tests, perform slump and air content tests, and determine the temperature of the concrete.	Test	LOR	Table 1705A.3 Item 6; ACI 318-19 Sections 26.5 & 26.12.
☑	d. Test concrete (f'c).	Test	LOR	1905A.1.17; ACI 318-19 Section 26.12.
	S/A1. STRUCTURAL STEEL, COLD-FORMED STEEL AND ALUMINUM USED FOR STRUCTURAL PURPOSES			
☑	a. Verify identification of all materials and: • Mill certificates indicate material properties that comply with requirements. • Material sizes, types and grades comply with requirements.	Periodic	*	Table 1705A.2.1 Item 3a–3c. 2202A.1; AISI S100-20 Section A3.1 & A3.2, AISI S240-20 Section A3 & A5, AISI S220-20 Sections A4 & A6. * By special inspector or qualified technician when performed off-site.
☑	b. Test unidentified materials	Test	LOR	2202A.1.
☑	c. Examine seam welds of HSS shapes	Periodic	SI	DSA IR 17-3.
☑	d. Verify and document steel fabrication per DSA-approved construction documents.	Periodic	SI	Not applicable to cold-formed steel light-frame construction, except for trusses (1705A.2.4).
	S/A3. WELDING:			
☑	a. Verify weld filler material identification markings per AWS designation listed on the DSA-approved documents and the WPS.	Periodic	SI	1705A.2.5, Table 1705A.2.1 Items 4 & 5: AWS D1.1 and AWS D1.8 for structural steel; AWS D1.2 for Aluminum; AWS D1.3 for cold-formed steel; AWS D1.4 for reinforcing steel; DSA IR 17-3.
☑	b. Verify weld filler material manufacturer's certificate of compliance.	Periodic	SI	DSA IR 17-3.
☑	c. Verify WPS, welder qualifications and equipment.	Periodic	SI	DSA IR 17-3.
	S/A4. SHOP WELDING (IN ADDITION TO SECTION S/A3):			
☑	a. Inspect groove welds, multi-pass fillet welds, single pass fillet welds > 5/16", plug and slot welds.	Continuous	SI	Table 1705A.2.1 Items 5a.1–4; AISC 360-16 (and AISC 341-16 as applicable); DSA IR 17-3.
☑	b. Inspect single-pass fillet welds ≤ 5/16", floor and roof deck welds.	Periodic	SI	1705A.2.2, Table 1705A.2.1 Items 5a.5 & 5a.6; AISC 360-16 (and AISC 341-16 as applicable); DSA IR 17-3.
	S/A5. FIELD WELDING (IN ADDITION TO SECTION S/A3):			
☑	a. Inspect groove welds, multi-pass fillet welds, single pass fillet welds > 5/16", plug and slot welds.	Continuous	SI	Table 1705A.2.1 Items 5a.1–4; AISC 360-16 (AISC 341-16 as applicable); DSA IR 17-3.
☑	b. Inspect single-pass fillet welds ≤ 5/16".	Periodic	SI	Table 1705A.2.1 Item 5a.5; AISC 360-16 (AISC 341-16 as applicable); DSA IR 17-3.
	S/A9. ANCHOR BOLTS AND ANCHOR RODS:			
☑	b. Threaded rod not used for foundation anchorage.	Test	LOR	Identify, sample and test threaded rods **not** meeting exemptions identified in Section 1 of IR 17-11.
	X1. OTHER:			
☑	c. SOLAR PANEL ATTACHMENT	Continuous	LOR	Pre-tension bolt connections and calibration of test equipment
☑	d. SOLAR PANEL ATTACHMENT BOLTS	Test	LOR	Bolts shall be identified, sampled, and tested in accordance with DSA IR 17-8.19

1. Soils Testing and Inspection: Geotechnical Verified Report Form DSA 293
2. Structural Testing and Inspection: Laboratory Verified Report Form DSA 291
3. Post-installed Anchors: Laboratory Verified Report Form DSA 291, or, for independently contracting SI, Special Inspection Verified Report Form DSA 292
4. Shop Welding Inspection: Laboratory Verified Report Form DSA 291, or, for independently contracting SI, Special Inspection Verified Report Form DSA 292

6 / - SAMPLE DSA-103 - STRUCTURES WITH ONLY SPREAD FOUNDATIONS WITHOUT POST INSTALLED ANCHORS

DSA 103-22: LISTING OF STRUCTURAL TESTS & SPECIAL INSPECTIONS, 2022 CBC

Application Number: 04-122152
School Name: Ultimate Guardian PC-22.1
School District: N/A
DSA File Number: PC-61
- Pier Footing with Post Installed Anchors
Increment Number:
Date Created: 2023-04-06

Geotechnical Reports: Project has a geotechnical report, or CDs indicate soils special inspection is required by GE

	Test or Special Inspection	Type	Performed By	Code References and Notes
	S1. GENERAL:			
☑	a. Verify that: • Site has been prepared properly prior to placement of controlled fill and/or excavations for foundations. • Foundation excavations are extended to proper depth and have reached proper material. • Materials below footings are adequate to achieve the design bearing capacity.	Periodic	GE*	* By geotechnical engineer or his or her qualified representative. (See Appendix (end of this form) form for exemptions.)
	S4. CAST-IN-PLACE DEEP FOUNDATIONS (PIERS):			
☑	a. Inspect drilling operations and maintain complete and accurate records for each pier.	Continuous	GE*	* By geotechnical engineer or his or her qualified representative. (See Appendix (end of this form) for exemptions.)
☑	b. Verify pier locations, diameters, plumbness, bell diameters (if applicable), lengths and embedment into bedrock (if applicable); record concrete or grout volumes.	Continuous	GE*	* By geotechnical engineer or his or her qualified representative. (See Appendix (end of this form) for exemptions.)
☑	c. Confirm adequate end strata bearing capacity.	Continuous	GE*	* By geotechnical engineer or his or her qualified representative. (See Appendix (end of this form) for exemptions.)
☑	d. Concrete piers.	Provide tests and inspections per CONCRETE section below.		
	C1. CAST-IN-PLACE CONCRETE			
☑	a. Verify use of required design mix.	Periodic	SI	Table 1705A.3 Item 5, 1910A.1.
☑	b. Identify, sample, and test reinforcing steel.	Test	LOR	1910A.2; ACI 318-19 Ch.20 and Section 26.6.1.2; DSA IR 17-10. (See Appendix (end of this form) for exemptions.)
☑	c. During concrete placement, fabricate specimens for strength tests, perform slump and air content tests, and determine the temperature of the concrete.	Test	LOR	Table 1705A.3 Item 6; ACI 318-19 Sections 26.5 & 26.12.
☑	d. Test concrete (f'c).	Test	LOR	1905A.1.17; ACI 318-19 Section 26.12.
	C5. POST-INSTALLED ANCHORS:			
☑	a. Inspect installation of post-installed anchors	See Notes	SI*	1617A.1.19, Table 1705A.3 Item 4a (Continuous) & 4b (Periodic), 1705A.3.8 (See Appendix (end of this form) for exemptions). ACI 318-14 Sections 17.8 & 26.13. * May be performed by the project inspector when specifically approved by DSA.
☑	b. Test post-installed anchors.	Test	LOR	1910A.5. (See Appendix (end of this form) for exemptions.)
	S/A1. STRUCTURAL STEEL, COLD-FORMED STEEL AND ALUMINUM USED FOR STRUCTURAL PURPOSES			
☑	a. Verify identification of all materials and: • Mill certificates indicate material properties that comply with requirements. • Material sizes, types and grades comply with requirements.	Periodic	*	Table 1705A.2.1 Item 3a–3c. 2202A.1; AISI S100-20 Section A3.1 & A3.2, AISI S240-20 Section A3 & A5, AISI S220-20 Sections A4 & A6. * By special inspector or qualified technician when performed off-site.
☑	b. Test unidentified materials	Test	LOR	2202A.1.
☑	c. Examine seam welds of HSS shapes	Periodic	SI	DSA IR 17-3.
☑	d. Verify and document steel fabrication per DSA-approved construction documents.	Periodic	SI	Not applicable to cold-formed steel light-frame construction, except for trusses (1705A.2.4).
	S/A3. WELDING:			
☑	a. Verify weld filler material identification markings per AWS designation listed on the DSA-approved documents and the WPS.	Periodic	SI	1705A.2.5, Table 1705A.2.1 Items 4 & 5: AWS D1.1 and AWS D1.8 for structural steel; AWS D1.2 for Aluminum; AWS D1.3 for cold-formed steel; AWS D1.4 for reinforcing steel; DSA IR 17-3.
☑	b. Verify weld filler material manufacturer's certificate of compliance.	Periodic	SI	DSA IR 17-3.
☑	c. Verify WPS, welder qualifications and equipment.	Periodic	SI	DSA IR 17-3.
	S/A4. SHOP WELDING (IN ADDITION TO SECTION S/A3):			
☑	a. Inspect groove welds, multi-pass fillet welds, single pass fillet welds > 5/16", plug and slot welds.	Continuous	SI	Table 1705A.2.1 Items 5a.1–4; AISC 360-16 (and AISC 341-16 as applicable); DSA IR 17-3.
☑	b. Inspect single-pass fillet welds ≤ 5/16", floor and roof deck welds.	Periodic	SI	1705A.2.2, Table 1705A.2.1 Items 5a.5 & 5a.6; AISC 360-16 (and AISC 341-16 as applicable); DSA IR 17-3.
	S/A5. FIELD WELDING (IN ADDITION TO SECTION S/A3):			
☑	a. Inspect groove welds, multi-pass fillet welds, single pass fillet welds > 5/16", plug and slot welds.	Continuous	SI	Table 1705A.2.1 Items 5a.1–4; AISC 360-16 (AISC 341-16 as applicable); DSA IR 17-3.
☑	b. Inspect single-pass fillet welds ≤ 5/16".	Periodic	SI	Table 1705A.2.1 Item 5a.5; AISC 360-16 (AISC 341-16 as applicable); DSA IR 17-3.
	S/A9. ANCHOR BOLTS AND ANCHOR RODS:			
☑	b. Threaded rod not used for foundation anchorage.	Test	LOR	Identify, sample and test threaded rods **not** meeting exemptions identified in Section 1 of IR 17-11.
	X1. OTHER:			
☑	c. SOLAR PANEL ATTACHMENT	Continuous	LOR	Pre-tension bolt connections and calibration of test equipment
☑	d. SOLAR PANEL ATTACHMENT BOLTS	Test	LOR	Bolts shall be identified, sampled, and tested in accordance with DSA IR 17-8.19

1. Soils Testing and Inspection: Geotechnical Verified Report Form DSA 293
2. Structural Testing and Inspection: Laboratory Verified Report Form DSA 291
3. Post-installed Anchors: Laboratory Verified Report Form DSA 291, or, for independently contracting SI, Special Inspection Verified Report Form DSA 292
4. Shop Welding Inspection: Laboratory Verified Report Form DSA 291, or, for independently contracting SI, Special Inspection Verified Report Form DSA 292
5. Field Welding Inspection: Laboratory Verified Report Form DSA 291, or, for independently contracting SI, Special Inspection Verified Report Form DSA 292

1 / - SAMPLE DSA-103 - STRUCTURES WITH ONLY PIER FOUNDATIONS WITH POST INSTALLED ANCHORS

THE EXAMPLE FORM DSA-103'S SHOWN ON THIS SHEET ARE FOR ILLUSTRATION PURPOSES ONLY TO ASSIST IN THE COMPLETION OF FUTURE PROJECT-SPECIFIC FORM DSA-103'S. A FORM DSA-103 IS TO BE COMPLETED FOR EACH APPLICATION THAT THIS PC IS BEING INCORPORATED INTO AND ALL EXAMPLE FORM DSA-103'S ARE TO BE CROSSED OUT ON THIS DRAWING

DRAWINGS, SPECIFICATIONS AND OTHER DOCUMENTS, PREPARED BY THE DESIGN PROFESSIONAL (DP) AND THE DP'S CONSULTANTS ARE INSTRUMENTS OF SERVICE FOR USE SOLELY WITH RESPECT TO THIS PROJECT. THIS INCLUDES DOCUMENTS IN ELECTRONIC FORM. THE DP AND THE DP'S CONSULTANTS SHALL BE DEEMED THE AUTHORS AND OWNERS OF THEIR RESPECTIVE INSTRUMENTS OF SERVICE AND SHALL RETAIN ALL COMMON LAW, STATUTORY AND OTHER RESERVED RIGHTS, INCLUDING COPYRIGHTS. THE INSTRUMENTS OF SERVICE SHALL NOT BE USED BY THE OWNER FOR FUTURE ADDITIONS OR ALTERATIONS TO THIS PROJECT OR FOR OTHER PROJECTS, WITHOUT THE PRIOR WRITTEN AGREEMENT OF THE DP. ANY UNAUTHORIZED USE OF THE INSTRUMENTS OF SERVICE SHALL BE AT THE OWNER'S SOLE RISK AND WITHOUT LIABILITY TO THE DP AND THE DP'S CONSULTANTS.

4 STEL ENGINEERING
26030 ACERO
MISSION VIEJO, CA 92691
949.305.1150 | FAX 949.305.1420

M BAR C CONSTRUCTION INC.
1770 LA COSTA MEADOWS DRIVE SAN MARCOS, CA 92078
ERIK KRIVOKOPICH
PHONE: (760) 744-4131
FAX: (760) 744-4449
ERIK@MBARCONLINE.COM
LIC # 869960 B AND C51
(775) 787-8845

ENGINEER'S APPROVAL
REGISTERED PROFESSIONAL ENGINEER
DUSTIN K. ROSEPINK
S 5885
STRUCTURAL
STATE OF CALIFORNIA

BID INFORMATION
THE STRUCTURES AND DESIGNS IN THIS PC ARE PROPRIETARY TO M BAR C CONSTRUCTION, INC. AND 4 S.T.E.L. ENGINEERING, INC. ALL SITES USING THIS PC: M BAR C CONSTRUCTION, INC. SHALL BE THE STEEL CONTRACTOR & 4 S.T.E.L. ENGINEERING, INC. SHALL BE THE SEOR. SEE THE STANDARD NOTES FOR PC USE ON S-1 FOR ADDITIONAL REQUIREMENTS.

PRE-CHECK (PC) DOCUMENT
CODE: 2022 CBC
A SEPARATE PROJECT APPLICATION FOR CONSTRUCTION IS REQUIRED

APPROVED
DIV. OF THE STATE ARCHITECT
APP: 04-123080 PC
REVIEWED FOR
SS ☑ FLS ☑ ACS ☑ CG ☐
DATE: 11/25/2024

SITE SPECIFIC INFORMATION
VISALIA CAMPUS UNIV. CENTER
COLLEGE OF THE SEQUOIAS
915 S. MOONEY BLVD,
VISALIA, CA 93277

REVISIONS

MARK	DATE	DESCRIPTION

UG 22.1.1

4 STEL JOB #	MC02-V3-1-1
DATE	11-18-24
DRAWN BY	GM
CHECKED	RWS

SAMPLE
DSA-103 FORMS

S-4

NOTE: IF DWG. IS NOT 24 x 36, IT IS NOT FULL SIZE

USE	SECTION NAME	D (in)	B (in)	L (in)	GA	WT (lb/ft)	A (in²)	AXIS X-X			AXIS Y-Y		
								I_x (in⁴)	S_{xx} (in³)	r_x (in)	I_y (in⁴)	S_y (in³)	r_y (in)
☐	CS5 x 2.5 x 0.057	5	2.5	0.625	16	2.086	0.613	2.513	0.819	2.025	0.625	0.322	0.929
☐	CS7 x 2.5 x 0.057	7	2.5	0.625	16	2.471	0.726	5.462	1.288	2.743	0.590	0.334	0.902
☐	CS7 x 2.5 x 0.071	7	2.5	0.625	14	3.086	0.907	6.768	1.934	2.732	0.723	0.402	0.893
☒	CS9 x 2.5 x 0.057	9	2.5	0.625	16	2.856	0.839	9.864	1.630	3.428	0.635	0.341	0.870
☐	CS11 x 2.5 x 0.057	11	2.5	0.625	16	3.241	0.953	15.045	2.245	4.091	0.669	0.347	0.838

NOTES:

1. COLD FORMED STEEL (CFS) BLOCKING MATERIAL SHALL CONFORM TO ASTM A653 SS GRADE 55 (F_y = 55 KSI, F_U = 70 KSI) OR ASTM A1011 SS GRADE 55 (F_y = 55 KSI, F_U = 70 KSI).
2. COLD FORMED STEEL (CFS) DESIGNED PER 2012 AISI SPECIFICATIONS AND COLD-FORMED STEEL DESIGN MANUAL.
3. CFS SECTION PROPERTIES LISTED ABOVE ARE MINIMUM SECTION PROPERTIES REQUIRED PER THE LATEST STEEL FRAMING INDUSTRY ASSOCIATION (SFIA) PRODUCT TECHNICAL GUIDE. ACTUAL MANUFACTURER'S PROPERTIES MUST MEET OR EXCEED SFIA PROPERTIES.

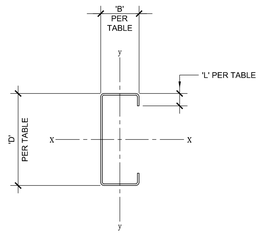

3 PURLIN BLOCKING AND BRACING
COLD FORMED C-SECTIONS
N.T.S.

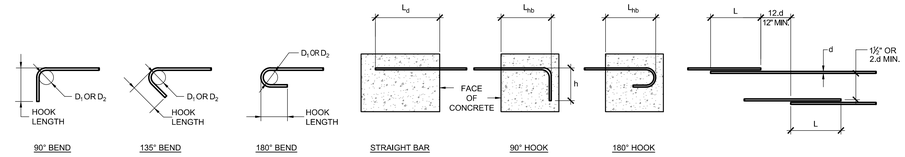

FINISHED BEND DIAMETERS		
BAR SIZE	D_1	D_2
#3	1½"	2¼"
#4	2"	3"
#5	2½"	3¾"
#6, #7, #8	6.d	6.d

"D_1" - FINISHED BEND DIA. FOR STIRRUP & TIE HOOKS.
"D_2" - BEND DIA. FOR STD HOOKS.
"d" - BAR DIAMETER

STANDARD HOOK LENGTHS				
BAR SIZE	MAIN REINFT.		STIRRUP & TIE HOOKS	
	90°	180°	90°	135°
#3	6"	4"	3½"	4¼"
#4	8"	4½"	4½"	4½"
#5	10"	5"	6"	6"
#6	12"	6"	12"	7½"
#7	14"	7"	14"	9"
#8	16"	8"	16"	10"

REINFORCEMENT DEVELOPMENT LENGTHS				
CONCRETE STRENGTH		F'c = 3,000 PSI		
NOMINAL BAR SIZE	h	L_d		L_{hb}
		TOP BARS	OTHER BARS	
#3	6"	1'-10"	1'-5"	9"
#4	8"	2'-5"	1'-10"	11"
#5	10"	3'-0"	2'-4"	1'-2"
#6	1'-0"	3'-7"	2'-9"	1'-5"
#7	1'-2"	5'-3"	4'-0"	1'-7"
#8	1'-4"	6'-0"	4'-7"	1'-10"

NOTES:
1. TOP BARS ARE HORIZONTAL BARS WITH MORE THAN 12 INCHES OF CONCRETE CAST BELOW.

REINFORCEMENT LAP SPLICE LENGTH 'L'		
CONCRETE STRENGTH	F'c=3,000 PSI	
NOMINAL BAR SIZE	TOP BARS	OTHER BARS
#3	2'-4"	1'-10"
#4	3'-2"	2'-5"
#5	3'-11"	3'-0"
#6	4'-8"	3'-7"
#7	6'-9"	5'-3"
#8	7'-9"	6'-0"

NOTES:
1. LAP SPLICE SHALL BE INCREASED 50% WHERE CLEAR SPACE BETWEEN BARS IS LESS THAN 2 BAR DIAMETERS AND/OR THE CLEAR COVER IS LESS THAN ONE BAR DIAMETER.

A STANDARD HOOKS
B DEVELOPMENT LENGTHS
C OFFSETS AND LAP SPLICES

1 TYPICAL REINFORCEMENT BAR BENDS AND LAPS
N.T.S.

USE	SECTION NAME	D (in)	B (in)	t (in)	WT (lb/ft)	A (in²)	AXIS X-X			AXIS Y-Y		
							I_x (in⁴)	Z_x (in³)	r_x (in)	I_y (in⁴)	Z_y (in³)	r_y (in)
☐	HSS 12 x 8 x 1/4	12	8	0.250	33.630	9.590	196.000	30.100	4.520	105.000	20.600	3.310
☐	HSS 12 x 8 x 5/16	12	8	0.313	40.350	11.900	239.000	36.800	4.480	128.000	25.100	3.280
☐	HSS 12 x 8 x 3/8	12	8	0.375	47.000	14.100	279.000	43.600	4.450	149.000	29.300	3.250
☒	HSS 12 x 8 x 1/2	12	8	0.500	62.460	18.400	353.000	72.400	4.380	188.000	54.700	3.200
☐	HSS 14 x 10 x 5/16	14	10	0.313	48.860	14.400	406.000	69.100	5.310	242.000	55.000	4.100
☐	HSS 14 x 10 x 3/8	14	10	0.375	58.100	17.100	476.000	81.500	5.280	284.000	64.800	4.080
☐	HSS 14 x 10 x 1/2	14	10	0.500	76.070	22.400	608.000	105.000	5.210	361.000	83.600	4.010
☐	HSS 14 x 10 x 5/8	14	10	0.625	93.340	27.400	728.000	127.000	5.150	431.000	101.000	3.970
☐	HSS 16 x 12 x 5/16	16	12	0.313	57.360	16.900	636.000	93.900	6.130	410.000	77.300	4.930
☐	HSS 16 x 12 x 3/8	16	12	0.375	68.310	20.100	748.000	111.000	6.100	482.000	91.300	4.900
☐	HSS 16 x 12 x 1/2	16	12	0.500	89.680	26.400	962.000	144.000	6.040	618.000	118.000	4.840

NOTES
1. HSS BEAMS AND COLUMNS SHALL CONFORM TO ASTM A1085, F_y=50 ksi.

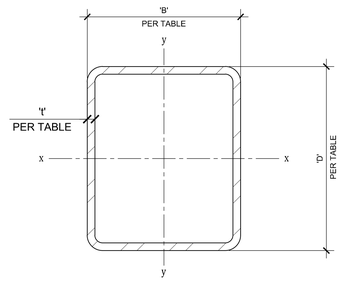

4 HOLLOW STRUCTURAL SECTIONS
N.T.S.

USE	SECTION NAME	D (in)	B (in)	L (in)	GA	WT (lb/ft)	A (in²)	AXIS X-X			AXIS Y-Y		
								I_x (in⁴)	S_{xx} (in³)	r_x (in)	I_y (in⁴)	S_y (in³)	r_y (in)
☐	CS8 x 3.5 x 0.071	8	3.5	0.875	14	4.000	1.174	12.046	2.596	3.203	2.034	0.836	1.316
☐	CS8 x 4 x 0.071	8	4	1.000	14	4.240	1.246	13.167	2.696	3.251	2.797	1.060	1.498
☐	CS10 x 3.5 x 0.071	10	3.5	0.875	14	4.480	1.317	20.204	3.417	3.917	2.185	0.877	1.288
☐	CS10 x 3.5 x 0.102	10	3.5	0.875	12	6.310	1.855	28.148	5.118	3.895	2.992	1.207	1.270
☐	CS10 x 4 x 0.071	10	4	1.000	14	4.720	1.388	21.961	3.424	3.977	3.009	1.086	1.472
☒	CS12 x 3.5 x 0.071	12	3.5	1.000	14	4.970	1.460	30.996	4.061	4.608	2.306	0.904	1.257
☐	CS12 x 3.5 x 0.102	12	3.5	1.000	12	7.010	2.059	43.269	6.590	4.584	3.159	1.244	1.239
☐	CS12 x 4 x 0.071	12	4	1.000	14	5.200	1.531	33.532	4.082	4.680	3.183	1.105	1.442
☐	CS12 x 4 x 0.102	12	4	1.000	12	7.350	2.161	46.868	6.761	4.658	4.376	1.527	1.423

NOTES:
1. COLD FORMED STEEL (CFS) PURLIN MATERIAL SHALL CONFORM TO ASTM A653 SS GRADE 55 (F_y = 55 KSI, F_U = 70 KSI) OR ASTM A1011 SS GRADE 55 (F_y = 55 KSI, F_U = 70 KSI).
2. COLD FORMED STEEL (CFS) DESIGNED PER 2012 AISI SPECIFICATIONS AND AISI COLD-FORMED STEEL DESIGN MANUAL.
3. CFS SECTION PROPERTIES LISTED ABOVE ARE MINIMUM SECTION PROPERTIES REQUIRED PER THE LATEST STEEL FRAMING INDUSTRY ASSOCIATION (SFIA) PRODUCT TECHNICAL GUIDE. ACTUAL MANUFACTURER'S PROPERTIES MUST MEET OR EXCEED SFIA PROPERTIES.

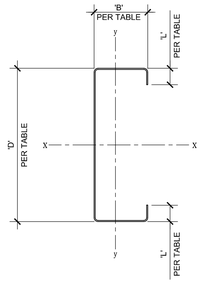

2 PURLINS
COLD FORMED C-SECTIONS
N.T.S.

DRAWINGS, SPECIFICATIONS AND OTHER DOCUMENTS, PREPARED BY THE DESIGN PROFESSIONAL (DP) AND THE DP'S CONSULTANTS ARE INSTRUMENTS OF SERVICE FOR USE SOLELY WITH RESPECT TO THIS PROJECT. THIS INCLUDES DOCUMENTS IN ELECTRONIC FORM. THE DP AND THE DP'S CONSULTANTS SHALL BE DEEMED THE AUTHORS AND OWNERS OF THEIR RESPECTIVE INSTRUMENTS OF SERVICE AND SHALL RETAIN ALL COMMON LAW, STATUTORY AND OTHER RESERVED RIGHTS, INCLUDING COPYRIGHTS. THE INSTRUMENTS OF SERVICE SHALL NOT BE USED BY THE OWNER FOR FUTURE ADDITIONS OR ALTERATIONS TO THIS PROJECT OR FOR OTHER PROJECTS, WITHOUT THE PRIOR WRITTEN AGREEMENT OF THE DP. ANY UNAUTHORIZED USE OF THE INSTRUMENTS OF SERVICE SHALL BE AT THE OWNER'S SOLE RISK AND WITHOUT LIABILITY TO THE DP AND THE DP'S CONSULTANTS.

IDENTIFICATION STAMP
DIV. OF THE STATE ARCHITECT
APP: 02-122821 INC: 2
REVIEWED FOR
SS ☑ FLS ☑ ACS ☑
DATE: 11/20/2025

4 STEL ENGINEERING
26030 ACERO
MISSION VIEJO, CA 92691
949.305.1150 | FAX 949.305.1420

M BAR C CONSTRUCTION INC.
17781A COSTA MEADOWS DRIVE
SAN MARCOS, CA 92078
ERIK KRNOKOPICH
PHONE: (760) 744-4131
FAX: (760) 746-4497
MBARCMAR@COMCAST.NET
LIC # 847960
B, HAZ-121
(775) 787-0645

ENGINEER'S APPROVAL

REGISTERED PROFESSIONAL ENGINEER
DUSTIN K. REBEAK
S 5885
CIVIL
STATE OF CALIFORNIA

BID INFORMATION

THE STRUCTURES AND DESIGNS IN THIS PC ARE PROPRIETARY TO M BAR C CONSTRUCTION, INC. AND 4 S.T.E.L. ENGINEERING, INC. ALL SITES USING THIS PC: M BAR C CONSTRUCTION, INC. SHALL BE THE STEEL CONTRACTOR & 4 S.T.E.L. ENGINEERING, INC. SHALL BE THE SEOR. SEE THE STANDARD NOTES FOR PC USE ON S-1 FOR ADDITIONAL REQUIREMENTS.

PRE-CHECK (PC) DOCUMENT

CODE: 2022 CBC

A SEPARATE PROJECT APPLICATION FOR CONSTRUCTION IS REQUIRED

APPROVED
DIV. OF THE STATE ARCHITECT
APP: 04-123080 PC
REVIEWED FOR
SS ☑ FLS ☑ ACS ☑ CG ☐
DATE: 11/25/2024

SITE SPECIFIC INFORMATION

VISALIA CAMPUS UNIV. CENTER
COLLEGE OF THE SEQUOIAS
915 S. MOONEY BLVD.
VISALIA, CA 93277

REVISIONS

MARK	DATE	DESCRIPTION

UG 22.1.1

4 STEL JOB #	MC02-V3-1-1
DATE	11-18-24
DRAWN BY	GM
CHECKED	RWS

SECTION PROPERTIES & REBAR DETAILS

S-5

NOTE: IF DWG. IS NOT 24 x 36, IT IS NOT FULL SIZE

IDENTIFICATION STAMP
DIV. OF THE STATE ARCHITECT
APP: 02-122821 INC: 2
REVIEWED FOR
SS ☑ FLS ☑ ACS ☑
DATE: 11/20/2025

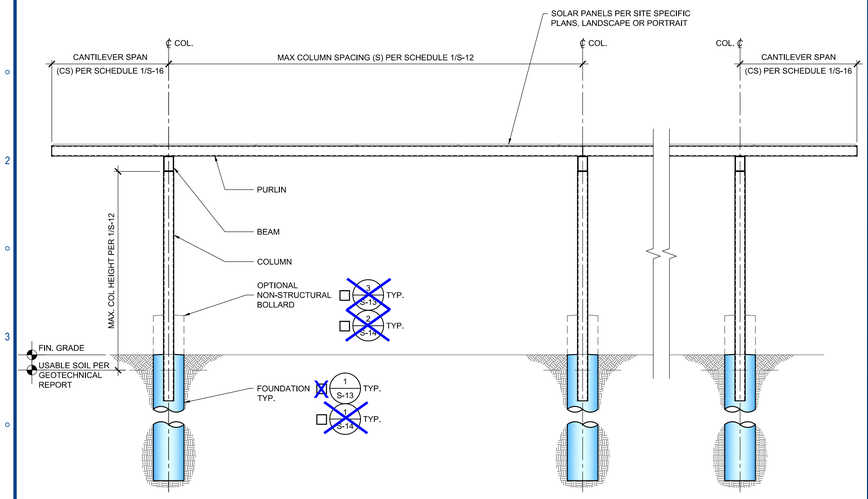

4 OT-STRUCTURE - TYPICAL SIDE ELEVATION
N.T.S.

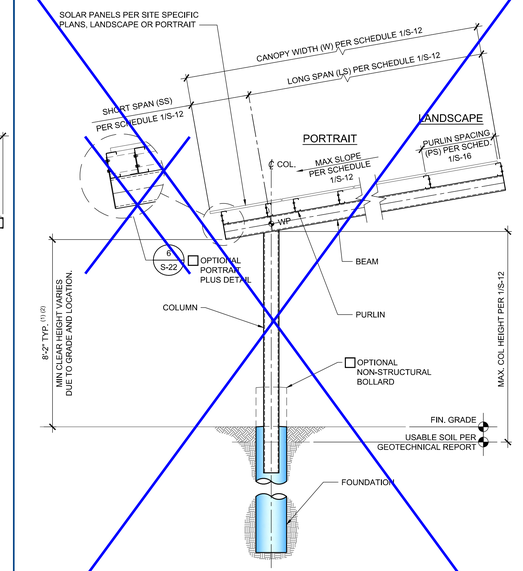

NOTES:
1. SEE ACCESS NOTES ON SHEET S-2 WHEN LOCATED IN ACCESSIBLE AREAS.
2. SEE FIRE LIFE SAFETY NOTE #1 ON SHEET S-2 WHEN AT FIRE LANE.

3 ☐ OT-STRUCTURE - END ELEVATION
N.T.S.

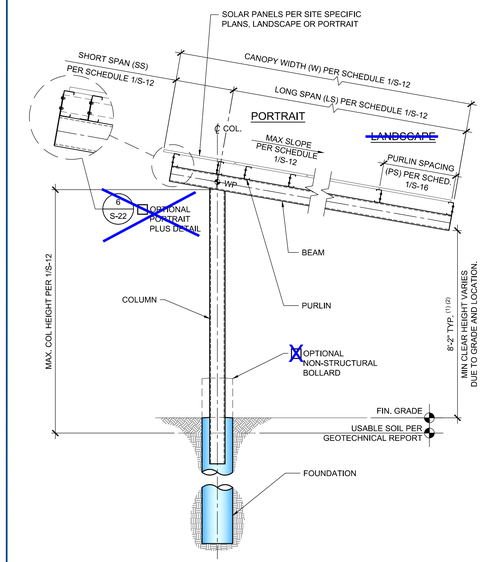

NOTES:
1. SEE ACCESS NOTES ON SHEET S-2 WHEN LOCATED IN ACCESSIBLE AREAS.
2. SEE FIRE LIFE SAFETY NOTE #1 ON SHEET S-2 WHEN AT FIRE LANE.

2 ☒ OT-STRUCTURE - END ELEVATION
N.T.S.

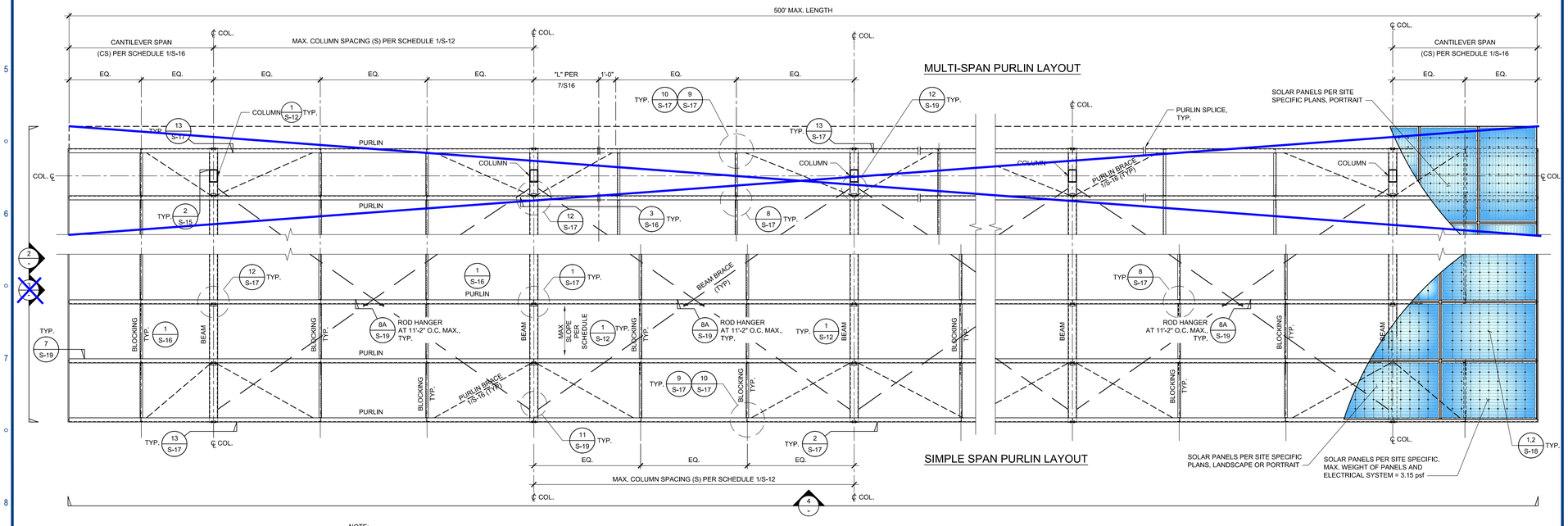

NOTE:
1. BEAM, COLUMN, CONNECTION, AND FOUNDATION SIZES AT ENDS OF STRUCTURE MAY NEED TO BE INCREASED DEPENDING ON PURLIN CANTILEVER. SEE PURLIN SCHEDULE '1/S-16' NOTE 6.
2. ☒ CANTILEVER MID-SPAN BLOCKING/CANTILEVER BRACING REQUIRED, SEE S-16.

1 OT-STRUCTURE - FRAMING PLAN
N.T.S.

DRAWINGS, SPECIFICATIONS AND OTHER DOCUMENTS, PREPARED BY THE DESIGN PROFESSIONAL (DP) AND THE DP'S CONSULTANTS ARE INSTRUMENTS OF SERVICE FOR USE SOLELY WITH RESPECT TO THIS PROJECT. THIS INCLUDES DOCUMENTS IN ELECTRONIC FORM. THE DP AND THE DP'S CONSULTANTS SHALL BE DEEMED THE AUTHORS AND OWNERS OF THEIR RESPECTIVE INSTRUMENTS OF SERVICE AND SHALL RETAIN ALL COMMON LAW, STATUTORY AND OTHER RESERVED RIGHTS, INCLUDING COPYRIGHTS. THE INSTRUMENTS OF SERVICE SHALL NOT BE USED BY THE OWNER FOR FUTURE ADDITIONS OR ALTERATIONS TO THIS PROJECT OR FOR OTHER PROJECTS, WITHOUT THE PRIOR WRITTEN AGREEMENT OF THE DP. ANY UNAUTHORIZED USE OF THE INSTRUMENTS OF SERVICE SHALL BE AT THE OWNER'S SOLE RISK AND WITHOUT LIABILITY TO THE DP AND THE DP'S CONSULTANTS.

4 STEL ENGINEERING
26030 ACERO
MISSION VIEJO, CA 92691
949.305.1150 | FAX 949.305.1420

M BAR C CONSTRUCTION INC.
1778 LA COSTA MEADOWS DRIVE
SAN MARCOS, CA 92078
ERIK KRVOKOPICH
PHONE: (760) 744-4131
FAX: (760) 746-4457
ERIK@MBARCONLINE.COM
LIC # B-879-0
B, ROC-121
(770) 787-8445

ENGINEER'S APPROVAL

REGISTERED PROFESSIONAL ENGINEER DUSTIN K. REBENACK S 5885 CIVIL STATE OF CALIFORNIA

BID INFORMATION
THE STRUCTURES AND DESIGNS IN THIS PC ARE PROPRIETARY TO M BAR C CONSTRUCTION, INC. AND 4 S.T.E.L. ENGINEERING, INC. ALL SITES USING THIS PC: M BAR C CONSTRUCTION, INC. SHALL BE THE STEEL CONTRACTOR & 4 S.T.E.L. ENGINEERING, INC. SHALL BE THE SEOR. SEE THE STANDARD NOTES FOR PC USE ON S-1 FOR ADDITIONAL REQUIREMENTS.

PRE-CHECK (PC) DOCUMENT
CODE: 2022 CBC
A SEPARATE PROJECT APPLICATION FOR CONSTRUCTION IS REQUIRED

APPROVED
DIV. OF THE STATE ARCHITECT
APP: 04-123080 PC
REVIEWED FOR
SS ☑ FLS ☑ ACS ☒ CG ☐
DATE: 11/25/2024

SITE SPECIFIC INFORMATION
VISALIA CAMPUS UNIV. CENTER
COLLEGE OF THE SEQUOIAS
915 S. MOONEY BLVD.
VISALIA, CA 93277

REVISIONS

MARK	DATE	DESCRIPTION

UG 22.1.1

4 STEL JOB #	MC02-V3-1-1
DATE	11-18-24
DRAWN BY	GM
CHECKED	RWS

OT-STRUCTURE FRAMING PLAN & ELEVATIONS

S-11

NOTE: IF DWG. IS NOT 24 x 36, IT IS NOT FULL SIZE

IDENTIFICATION STAMP
DIV. OF THE STATE ARCHITECT
APP: 02-122821 INC: 2
REVIEWED FOR
SS ☑ FLS ☑ ACS ☑
DATE: 11/20/2025

OT-STRUCTURE BEAM/COLUMN SCHEDULE

USE	I.D. #	MULTI SPAN PURLIN	MAX. WIDTH W	MIN. SHORT SPAN SS	MAX. LONG SPAN LS	MAX. COLUMN SPACING S	MAX. COLUMN HEIGHT (5)	MAX. ROOF SLOPE	ROOF SNOW LOAD (PSF)	BEAM		BEAM TO COLUMN DETAIL	COLUMN		LONG SPAN 'LS' BEAM LATERAL BRACING
										SECTION	DETAIL		SECTION	DETAIL	DETAILS
☐	OT-101		22'-0"	2'-0"	20'-0"	18'-0"	15'-0"	7°	5	HSS12 x 8 x 1/4	4/S-5	2/S-15	HSS12 x 8 x 1/4	4/S-5	11/S-19, 12/S-19
☐	OT-102		22'-0"	6'-0"	16'-0"	18'-0"	15'-0"	7°	5	HSS12 x 8 x 1/4	4/S-5	2/S-15	HSS12 x 8 x 1/4	4/S-5	11/S-19, 12/S-19
☐	OT-103		22'-0"	2'-0"	20'-0"	28'-6"	15'-0"	7°	5	HSS12 x 8 x 5/16	4/S-5	2/S-15	HSS12 x 8 x 3/8	4/S-5	11/S-19, 12/S-19
☐	OT-104		22'-0"	6'-0"	16'-0"	28'-6"	15'-0"	7°	5	HSS12 x 8 x 1/4	4/S-5	2/S-15	HSS12 x 8 x 5/16	4/S-5	11/S-19, 12/S-19
☐	OT-105	✓	22'-0"	2'-0"	20'-0"	32'-6"	15'-0"	7°	5	HSS12 x 8 x 5/16	4/S-5	2/S-15	HSS12 x 8 x 3/8	4/S-5	11/S-19, 12/S-19
☐	OT-106	✓	22'-0"	6'-0"	16'-0"	32'-6"	15'-0"	7°	5	HSS12 x 8 x 1/4	4/S-5	2/S-15	HSS12 x 8 x 5/16	4/S-5	11/S-19, 12/S-19
☐	OT-107	✓	22'-0"	2'-0"	20'-0"	35'-9"	15'-0"	7°	5	HSS12 x 8 x 3/8	4/S-5	2/S-15	HSS12 x 8 x 1/2	4/S-5	11/S-19, 12/S-19
☐	OT-108	✓	22'-0"	6'-0"	16'-0"	35'-9"	15'-0"	7°	5	HSS12 x 8 x 1/4	4/S-5	2/S-15	HSS12 x 8 x 5/16	4/S-5	11/S-19, 12/S-19
☐	OT-109		28'-3"	6'-0"	22'-3"	18'-0"	15'-0"	7°	5	HSS12 x 8 x 5/16	4/S-5	2/S-15	HSS12 x 8 x 5/16	4/S-5	11/S-19, 12/S-19
☒	OT-110		28'-3"	6'-0"	22'-3"	28'-6"	15'-0"	7°	5	HSS12 x 8 x 1/2	4/S-5	2/S-15	HSS12 x 8 x 1/2	4/S-5	11/S-19, 12/S-19
☐	OT-111		22'-0"	2'-0"	20'-0"	18'-0"	20'-0"	7°	5	HSS12 x 8 x 1/4	4/S-5	2/S-15	HSS12 x 8 x 5/16	4/S-5	11/S-19, 12/S-19
☐	OT-112		22'-0"	6'-0"	16'-0"	18'-0"	20'-0"	7°	0	HSS12 x 8 x 1/4	4/S-5	2/S-15	HSS12 x 8 x 1/4	4/S-5	11/S-19, 12/S-19
☐	OT-113		22'-0"	2'-0"	20'-0"	28'-6"	20'-0"	7°	0	HSS12 x 8 x 5/16	4/S-5	2/S-15	HSS12 x 8 x 3/8	4/S-5	11/S-19, 12/S-19
☐	OT-114		22'-0"	6'-0"	16'-0"	28'-6"	20'-0"	7°	5	HSS12 x 8 x 1/4	4/S-5	2/S-15	HSS12 x 8 x 5/16	4/S-5	11/S-19, 12/S-19
☐	OT-115	✓	22'-0"	2'-0"	20'-0"	32'-6"	20'-0"	7°	5	HSS12 x 8 x 3/8	4/S-5	2/S-15	HSS12 x 8 x 1/2	4/S-5	11/S-19, 12/S-19
☐	OT-116	✓	22'-0"	6'-0"	16'-0"	32'-6"	20'-0"	7°	5	HSS12 x 8 x 1/4	4/S-5	2/S-15	HSS12 x 8 x 3/8	4/S-5	11/S-19, 12/S-19
☐	OT-117	✓	22'-0"	2'-0"	20'-0"	35'-9"	20'-0"	7°	5	HSS12 x 8 x 3/8	4/S-5	2/S-15	HSS12 x 8 x 1/2	4/S-5	11/S-19, 12/S-19
☐	OT-118	✓	22'-0"	6'-0"	16'-0"	35'-9"	20'-0"	7°	5	HSS12 x 8 x 1/4	4/S-5	2/S-15	HSS12 x 8 x 3/8	4/S-5	11/S-19, 12/S-19
☐	OT-119		28'-3"	6'-0"	22'-3"	18'-0"	20'-0"	7°	5	HSS12 x 8 x 5/16	4/S-5	2/S-15	HSS12 x 8 x 5/16	4/S-5	11/S-19, 12/S-19
☐	OT-120		28'-3"	6'-0"	22'-3"	28'-6"	20'-0"	7°	5	HSS12 x 8 x 1/2	4/S-5	2/S-15	HSS12 x 8 x 1/2	4/S-5	11/S-19, 12/S-19
☐	OT-151		22'-0"	2'-0"	20'-0"	18'-0"	15'-0"	7°	20	HSS12 x 8 x 5/16	4/S-5	2/S-15	HSS12 x 8 x 3/8	4/S-5	11/S-19, 12/S-19
☐	OT-152		22'-0"	6'-0"	16'-0"	18'-0"	15'-0"	7°	20	HSS12 x 8 x 1/4	4/S-5	2/S-15	HSS12 x 8 x 5/16	4/S-5	11/S-19, 12/S-19
☐	OT-153		22'-0"	2'-0"	20'-0"	28'-6"	15'-0"	7°	20	HSS14 x 10 x 3/8	4/S-5	2/S-15	HSS14 x 10 x 1/2	4/S-5	11/S-19, 12/S-19
☐	OT-154		22'-0"	6'-0"	16'-0"	28'-6"	15'-0"	7°	20	HSS12 x 8 x 5/16	4/S-5	2/S-15	HSS12 x 8 x 3/8	4/S-5	11/S-19, 12/S-19
☐	OT-155	✓	22'-0"	2'-0"	20'-0"	32'-6"	15'-0"	7°	20	HSS14 x 10 x 3/8	4/S-5	2/S-15	HSS14 x 10 x 1/2	4/S-5	11/S-19, 12/S-19
☐	OT-156	✓	22'-0"	6'-0"	16'-0"	32'-6"	15'-0"	7°	20	HSS12 x 8 x 3/8	4/S-5	2/S-15	HSS12 x 8 x 1/2	4/S-5	11/S-19, 12/S-19
☐	OT-157	✓	22'-0"	2'-0"	20'-0"	35'-9"	15'-0"	7°	20	HSS14 x 10 x 1/2	4/S-5	2/S-15	HSS14 x 10 x 1/2	4/S-5	11/S-19, 12/S-19
☐	OT-158	✓	22'-0"	6'-0"	16'-0"	35'-9"	15'-0"	7°	20	HSS12 x 8 x 3/8	4/S-5	2/S-15	HSS12 x 8 x 1/2	4/S-5	11/S-19, 12/S-19
☐	OT-159		28'-3"	6'-0"	22'-3"	18'-0"	15'-0"	7°	20	HSS12 x 8 x 1/2	4/S-5	2/S-15	HSS12 x 8 x 1/2	4/S-5	11/S-19, 12/S-19
☐	OT-160		28'-3"	6'-0"	22'-3"	28'-6"	15'-0"	7°	20	HSS14 x 10 x 1/2	4/S-5	2/S-15	HSS14 x 10 x 1/2	4/S-5	11/S-19, 12/S-19
☐	OT-161		22'-0"	2'-0"	20'-0"	18'-0"	20'-0"	7°	20	HSS12 x 8 x 5/16	4/S-5	2/S-15	HSS12 x 8 x 3/8	4/S-5	11/S-19, 12/S-19
☐	OT-162		22'-0"	6'-0"	16'-0"	18'-0"	20'-0"	7°	20	HSS12 x 8 x 1/4	4/S-5	2/S-15	HSS12 x 8 x 5/16	4/S-5	11/S-19, 12/S-19
☐	OT-163		22'-0"	2'-0"	20'-0"	28'-6"	20'-0"	7°	20	HSS14 x 10 x 3/8	4/S-5	2/S-15	HSS14 x 10 x 1/2	4/S-5	11/S-19, 12/S-19
☐	OT-164		22'-0"	6'-0"	16'-0"	28'-6"	20'-0"	7°	20	HSS12 x 8 x 5/16	4/S-5	2/S-15	HSS12 x 8 x 3/8	4/S-5	11/S-19, 12/S-19
☐	OT-165	✓	22'-0"	2'-0"	20'-0"	32'-6"	20'-0"	7°	20	HSS14 x 10 x 3/8	4/S-5	2/S-15	HSS14 x 10 x 1/2	4/S-5	11/S-19, 12/S-19
☐	OT-166	✓	22'-0"	6'-0"	16'-0"	32'-6"	20'-0"	7°	20	HSS12 x 8 x 3/8	4/S-5	2/S-15	HSS12 x 8 x 1/2	4/S-5	11/S-19, 12/S-19
☐	OT-167	✓	22'-0"	2'-0"	20'-0"	35'-9"	20'-0"	7°	20	HSS14 x 10 x 1/2	4/S-5	2/S-15	HSS14 x 10 x 5/8	4/S-5	11/S-19, 12/S-19
☐	OT-168	✓	22'-0"	6'-0"	16'-0"	35'-9"	20'-0"	7°	20	HSS14 x 10 x 5/16	4/S-5	2/S-15	HSS14 x 10 x 3/8	4/S-5	11/S-19, 12/S-19
☐	OT-169		28'-3"	6'-0"	22'-3"	18'-0"	20'-0"	7°	20	HSS12 x 8 x 1/2	4/S-5	2/S-15	HSS12 x 8 x 1/2	4/S-5	11/S-19, 12/S-19
☐	OT-170		28'-3"	6'-0"	22'-3"	28'-6"	20'-0"	7°	20	HSS14 x 10 x 1/2	4/S-5	2/S-15	HSS14 x 10 x 1/2	4/S-5	11/S-19, 12/S-19

1. MULTIPLE STRUCTURE ID'S MAY BE SELECTED WITHIN THE SAME SITE AND/OR STRUCTURE.

2. WHEN UTILIZING A STRUCTURE ID READ FROM WITHIN THAT ID ROW ONLY.

3. THE SHORT SPAN AND LONG SPANS MAY BE ADJUSTED WITH THE FOLLOWING REQUIREMENTS:
   - THE OVERALL CANOPY WIDTH IS NOT EXCEEDED.
   - NEITHER SPAN IS LESS THAN THE MIN SHORT SPAN.
   - NEITHER SPAN EXCEEDS THE MAX LONG SPAN.

☐ MULTI-SPAN PURLIN REQUIRED

4. 32'-6" AND 35'-9" COLUMN SPACING MUST UTILIZE THE MULTI-SPAN PURLIN AS SHOWN WHEN MULTI SPAN PURLIN IS CHECKED ABOVE. THE ACTUAL SITE SPECIFIC COLUMN SPACING WILL BE DETERMINED BY THE SOLAR PANEL UTILIZED ON THE SITE. THE COLUMN QUANTITY, COLUMN SPACING, AND PURLIN CANTILEVER LENGTHS ON EACH ARRAY MUST COMPLY WITH THE CORRESPONDING NOTE 9 OR 10 ON 1/S-16.

5. MAXIMUM COLUMN HEIGHT IS MEASURED FROM 'USABLE SOIL PER GEOTECHNICAL REPORT' AS SHOWN ON SHEET S-11 AND DETERMINED ON GEOTECH REPORT.

1 / - OT-STRUCTURE BEAM/COLUMN SCHEDULE

4 STEL ENGINEERING
26030 ACERO
MISSION VIEJO, CA 92691
949.305.1150 | FAX 949.305.1420

M BAR C CONSTRUCTION INC.
1770 LA COSTA MEADOWS DRIVE
SAN MARCOS, CA 92078
DIR: KRIVOKOPICH
PHONE: (760) 744-4121
FAX: (760) 744-4497
DIR@MBARCONLINE.COM
LIC # B6Pm2
B.NVC-121
(770) 787-8445

ENGINEER'S APPROVAL

REGISTERED PROFESSIONAL ENGINEER
DUSTIN K. RESENK
S 5885
STATE OF CALIFORNIA

BID INFORMATION

THE STRUCTURES AND DESIGNS IN THIS PC ARE PROPRIETARY TO M BAR C CONSTRUCTION, INC. AND 4 S.T.E.L. ENGINEERING, INC. ALL SITES USING THIS PC: M BAR C CONSTRUCTION, INC. SHALL BE THE STEEL CONTRACTOR & 4 S.T.E.L. ENGINEERING, INC. SHALL BE THE SEOR. SEE THE STANDARD NOTES FOR PC USE ON S-1 FOR ADDITIONAL REQUIREMENTS.

PRE-CHECK (PC) DOCUMENT

CODE: 2022 CBC

A SEPARATE PROJECT APPLICATION FOR CONSTRUCTION IS REQUIRED

APPROVED
DIV. OF THE STATE ARCHITECT
APP: 04-123080 PC
REVIEWED FOR
SS ☑ FLS ☑ ACS ☑ CG ☐
DATE: 11/25/2024

SITE SPECIFIC INFORMATION

VISALIA CAMPUS UNIV. CENTER
COLLEGE OF THE SEQUOIAS
915 S. MOONEY BLVD,
VISALIA, CA 93277

REVISIONS

MARK	DATE	DESCRIPTION

UG 22.1.1

4 STEL JOB #	MC02-V3-1-1
DATE	11-18-24
DRAWN BY	GM
CHECKED	RWS

OT-STRUCTURE BEAM/COLUMN SCHEDULE

S-12

DRAWINGS, SPECIFICATIONS AND OTHER DOCUMENTS, PREPARED BY THE DESIGN PROFESSIONAL (DP) AND THE DP'S CONSULTANTS ARE INSTRUMENTS OF SERVICE FOR USE SOLELY WITH RESPECT TO THIS PROJECT. THIS INCLUDES DOCUMENTS IN ELECTRONIC FORM. THE DP AND THE DP'S CONSULTANTS SHALL BE DEEMED THE AUTHORS AND OWNERS OF THEIR RESPECTIVE INSTRUMENTS OF SERVICE AND SHALL RETAIN ALL COMMON LAW, STATUTORY AND OTHER RESERVED RIGHTS, INCLUDING COPYRIGHTS. THE INSTRUMENTS OF SERVICE SHALL NOT BE USED BY THE OWNER FOR FUTURE ADDITIONS OR ALTERATIONS TO THIS PROJECT OR FOR OTHER PROJECTS, WITHOUT THE PRIOR WRITTEN AGREEMENT OF THE DP. ANY UNAUTHORIZED USE OF THE INSTRUMENTS OF SERVICE SHALL BE AT THE OWNER'S SOLE RISK AND WITHOUT LIABILITY TO THE DP AND THE DP'S CONSULTANTS.

NOTE: IF DWG. IS NOT 24 x 36, IT IS NOT FULL SIZE

IDENTIFICATION STAMP
DIV. OF THE STATE ARCHITECT
APP: 02-122821 INC: 2
REVIEWED FOR
SS ☑ FLS ☑ ACS ☑
DATE: 11/20/2025

OT-STRUCTURE PIER FOUNDATION SCHEDULE

USE	I.D. #	MAX. WIDTH W	MAX. COLUMN SPACING S	MAX. COLUMN HEIGHT	MAX. ROOF SLOPE	ROOF SNOW LOAD (PSF)	COLUMN EMBEDMENT CE	FOUNDATION DETAIL	☒ W DIAMETER	☒ W VERTICAL REINFT.	☒ W DEPTH	☐ X DIAMETER	☐ X DEPTH	☐ Y DIAMETER	☐ Y DEPTH	☐ Z DIAMETER	☐ Z DEPTH	☒ X, Y, & Z VERTICAL REINFT.	ALL CLASSES TIE SPACING "TS" AT TOP
									PIER FOUNDATION DIAMETER & DEPTH — SOIL CLASS PER SOILS NOTES SHEET S-3										
☐	OT-101	22'-0"	18'-0"	15'-0"	7°	5	56"	2/S-13	2'-0"	(5) - #8	12'-0"	2'-0"	10'-6"	2'-0"	9'-6"	2'-0"	8'-3"	(5) - #8	6"
☐	OT-102	22'-0"	18'-0"	15'-0"	7°	5	56"	2/S-13	2'-0"	(4) - #8	10'-9"	2'-0"	9'-3"	2'-0"	8'-3"	2'-0"	7'-3"	(4) - #8	6"
☐	OT-103	22'-0"	28'-6"	15'-0"	7°	5	56"	2/S-13	2'-0"	(7) - #8	13'-9"	2'-0"	12'-0"	2'-0"	11'-0"	2'-0"	9'-6"	(7) - #8	5"
☐	OT-104	22'-0"	28'-6"	15'-0"	7°	5	56"	2/S-13	2'-0"	(4) - #8	12'-0"	2'-0"	10'-6"	2'-0"	9'-6"	2'-0"	8'-3"	(4) - #8	6"
☐	OT-105	22'-0"	32'-6"	15'-0"	7°	0	56"	2/S-13	2'-0"	(7) - #8	14'-0"	2'-0"	12'-3"	2'-0"	11'-0"	2'-0"	9'-9"	(7) - #8	5"
☐	OT-106	22'-0"	32'-6"	15'-0"	7°	5	56"	2/S-13	2'-0"	(5) - #8	12'-6"	2'-0"	11'-0"	2'-0"	10'-0"	2'-0"	8'-9"	(5) - #8	6"
☐	OT-107	22'-0"	35'-9"	15'-0"	7°	5	56"	2/S-13	2'-0"	(9) - #8	15'-0"	2'-0"	13'-0"	2'-0"	11'-9"	2'-0"	10'-3"	(9) - #8	3"
☐	OT-108	22'-0"	35'-9"	15'-0"	7°	5	56"	2/S-13	2'-0"	(5) - #8	13'-0"	2'-0"	11'-3"	2'-0"	10'-3"	2'-0"	9'-0"	(5) - #8	6"
☐	OT-109	28'-3"	18'-0"	15'-0"	7°	5	56"	2/S-13	2'-0"	(5) - #8	12'-9"	2'-0"	11'-0"	2'-0"	10'-0"	2'-0"	8'-9"	(5) - #8	6"
☒	OT-110	28'-3"	28'-6"	15'-0"	7°	5	56"	2/S-13	2'-0"	(9) - #8	14'-9"	2'-0"	13'-0"	2'-0"	11'-9"	2'-0"	10'-3"	(9) - #8	3"
☐	OT-111	22'-0"	18'-0"	20'-0"	7°	5	56"	2/S-13	2'-0"	(5) - #8	12'-3"	2'-0"	10'-9"	2'-0"	9'-9"	2'-0"	8'-6"	(5) - #8	6"
☐	OT-112	22'-0"	18'-0"	20'-0"	7°	0	56"	2/S-13	2'-0"	(4) - #8	11'-3"	2'-0"	9'-9"	2'-0"	8'-9"	2'-0"	7'-6"	(4) - #8	6"
☐	OT-113	22'-0"	28'-6"	20'-0"	7°	0	56"	2/S-13	2'-0"	(7) - #8	13'-9"	2'-0"	12'-0"	2'-0"	11'-0"	2'-0"	9'-6"	(7) - #8	5"
☐	OT-114	22'-0"	28'-6"	20'-0"	7°	5	56"	2/S-13	2'-0"	(5) - #8	12'-6"	2'-0"	11'-0"	2'-0"	9'-9"	2'-0"	8'-6"	(5) - #8	6"
☐	OT-115	22'-0"	32'-6"	20'-0"	7°	5	56"	2/S-13	2'-0"	(9) - #8	15'-0"	2'-0"	13'-0"	2'-0"	11'-9"	2'-0"	10'-3"	(9) - #8	3"
☐	OT-116	22'-0"	32'-6"	20'-0"	7°	5	56"	2/S-13	2'-0"	(6) - #8	13'-0"	2'-0"	11'-3"	2'-0"	10'-3"	2'-0"	9'-0"	(6) - #8	6"
☐	OT-117	22'-0"	35'-9"	20'-0"	7°	5	56"	2/S-13	2'-0"	(10) - #8	15'-6"	2'-0"	13'-6"	2'-0"	12'-3"	2'-0"	10'-9"	(10) - #8	3"
☐	OT-118	22'-0"	35'-9"	20'-0"	7°	5	56"	2/S-13	2'-0"	(6) - #8	13'-6"	2'-0"	11'-9"	2'-0"	10'-9"	2'-0"	9'-3"	(6) - #8	6"
☐	OT-119	28'-3"	18'-0"	20'-0"	7°	5	56"	2/S-13	2'-0"	(6) - #8	13'-3"	2'-0"	11'-6"	2'-0"	10'-6"	2'-0"	9'-0"	(6) - #8	6"
☐	OT-120	28'-3"	28'-6"	20'-0"	7°	5	56"	2/S-13	2'-0"	(10) - #8	15'-3"	2'-0"	13'-3"	2'-0"	12'-3"	2'-0"	10'-6"	(10) - #8	3"
☐	OT-151	22'-0"	18'-0"	15'-0"	7°	20	56"	2/S-13	2'-0"	(7) - #8	12'-9"	2'-0"	11'-3"	2'-0"	10'-3"	2'-0"	9'-0"	(7) - #8	6"
☐	OT-152	22'-0"	18'-0"	15'-0"	7°	20	56"	2/S-13	2'-0"	(4) - #8	11'-0"	2'-0"	9'-9"	2'-0"	8'-9"	2'-0"	7'-9"	(4) - #8	6"
☐	OT-153	22'-0"	28'-6"	15'-0"	7°	20	70"	2/S-13	2'-6"	(7) - #8	13'-9"	2'-6"	12'-0"	2'-6"	11'-0"	2'-6"	9'-6"	(7) - #8	6"
☐	OT-154	22'-0"	28'-6"	15'-0"	7°	20	56"	2/S-13	2'-0"	(6) - #8	13'-0"	2'-0"	11'-3"	2'-0"	10'-3"	2'-0"	9'-0"	(6) - #8	6"
☐	OT-155	22'-0"	32'-6"	15'-0"	7°	20	70"	2/S-13	2'-6"	(9) - #8	14'-6"	2'-6"	12'-9"	2'-6"	11'-6"	2'-6"	10'-0"	(9) - #8	5"
☐	OT-156	22'-0"	32'-6"	15'-0"	7°	20	56"	2/S-13	2'-0"	(7) - #8	15'-6"	2'-0"	11'-9"	2'-0"	10'-9"	2'-0"	9'-3"	(7) - #8	4"
☐	OT-157	22'-0"	35'-9"	15'-0"	7°	20	70"	2/S-13	2'-6"	(10) - #8	15'-0"	2'-6"	13'-3"	2'-6"	12'-0"	2'-6"	10'-6"	(10) - #8	4"
☐	OT-158	22'-0"	35'-9"	15'-0"	7°	20	56"	2/S-13	2'-6"	(6) - #8	13'-9"	2'-0"	12'-3"	2'-0"	11'-9"	2'-0"	10'-0"	(8) - #8	4"
☐	OT-159	28'-3"	18'-0"	15'-0"	7°	20	56"	2/S-13	2'-0"	(8) - #8	13'-9"	2'-0"	12'-0"	2'-0"	11'-0"	2'-0"	9'-6"	(8) - #8	4"
☐	OT-160	28'-3"	28'-6"	15'-0"	7°	20	70"	2/S-13	2'-6"	(9) - #8	14'-9"	2'-6"	13'-0"	2'-6"	11'-9"	2'-6"	10'-3"	(9) - #8	5"
☐	OT-161	22'-0"	18'-0"	20'-0"	7°	20	56"	2/S-13	2'-0"	(7) - #8	13'-3"	2'-0"	11'-6"	2'-0"	10'-6"	2'-0"	9'-3"	(7) - #8	5"
☐	OT-162	22'-0"	18'-0"	20'-0"	7°	20	56"	2/S-13	2'-0"	(4) - #8	11'-9"	2'-0"	10'-0"	2'-0"	9'-0"	2'-0"	8'-0"	(4) - #8	6"
☐	OT-163	22'-0"	28'-6"	20'-0"	7°	20	70"	2/S-13	2'-6"	(8) - #8	14'-3"	2'-6"	12'-6"	2'-6"	11'-3"	2'-6"	9'-9"	(8) - #8	6"
☐	OT-164	22'-0"	28'-6"	20'-0"	7°	20	56"	2/S-13	2'-0"	(7) - #8	13'-3"	2'-0"	11'-6"	2'-0"	10'-6"	2'-0"	9'-3"	(7) - #8	5"
☐	OT-165	22'-0"	32'-6"	20'-0"	7°	20	70"	2/S-13	2'-6"	(9) - #8	15'-0"	2'-6"	13'-0"	2'-6"	11'-9"	2'-6"	10'-3"	(9) - #8	5"
☐	OT-166	22'-0"	32'-6"	20'-0"	7°	20	56"	2/S-13	2'-0"	(8) - #8	16'-0"	2'-0"	12'-3"	2'-0"	11'-0"	2'-0"	9'-9"	(8) - #8	4"
☐	OT-167	22'-0"	35'-9"	20'-0"	7°	20	70"	2/S-13	2'-6"	(11) - #8	15'-6"	2'-6"	13'-6"	2'-6"	12'-3"	2'-6"	10'-9"	(11) - #8	4"
☐	OT-168	22'-0"	35'-9"	20'-0"	7°	20	70"	2/S-13	2'-6"	(6) - #8	14'-0"	2'-6"	11'-9"	2'-6"	10'-6"	2'-6"	9'-3"	(6) - #8	6"
☐	OT-169	28'-3"	18'-0"	20'-0"	7°	20	56"	2/S-13	2'-0"	(9) - #8	14'-3"	2'-0"	12'-6"	2'-0"	11'-3"	2'-0"	9'-9"	(9) - #8	3"
☐	OT-170	28'-3"	28'-6"	20'-0"	7°	20	70"	2/S-13	2'-6"	(10) - #8	15'-3"	2'-6"	13'-3"	2'-6"	12'-0"	2'-6"	10'-6"	(10) - #8	4"

1. MULTIPLE STRUCTURE ID'S MAY BE SELECTED WITHIN THE SAME SITE AND/OR STRUCTURE.
2. WHEN UTILIZING A STRUCTURE ID READ FROM WITHIN THAT ID ROW ONLY.
3. SEE SOILS NOTES ON SHEET S-3 FOR INFORMATION ON SOILS CLASS SELECTION.
4. WHERE WATER MITIGATION IS NECESSARY, OR FOR OTHER CONDITIONS REQUIRING MITIGATION, REFER TO DETAIL '2/-' FOR SLEEVED FOUNDATION OPTION.
5. FOR CONDUIT INTERACTION WITH FOUNDATION SEE S-21.

1 / - OT-STRUCTURE NON-CONSTRAINED PIER FOUNDATION SCHEDULE

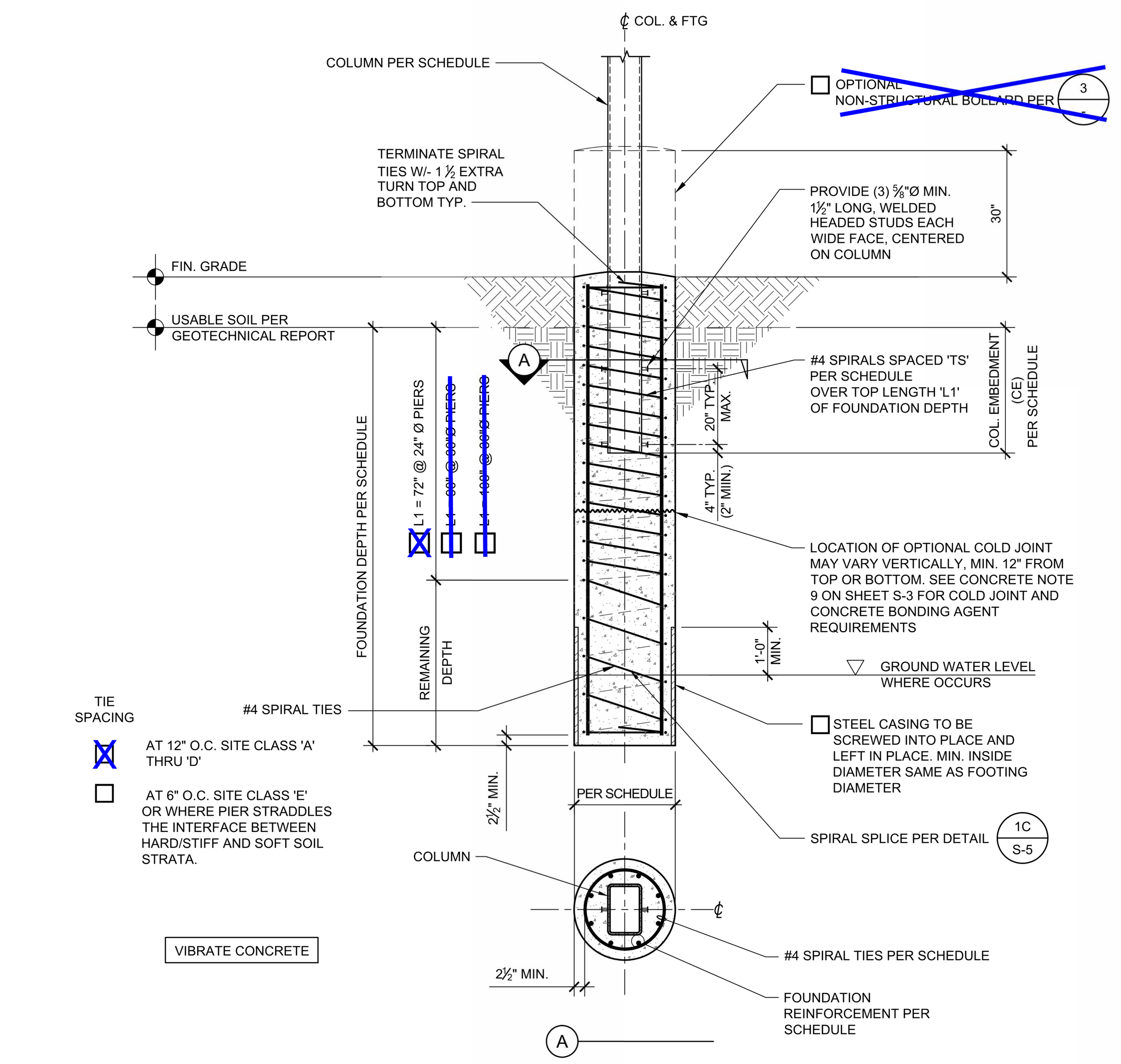

2 / - PIER FOUNDATION DETAIL
1/2" = 1'-0"

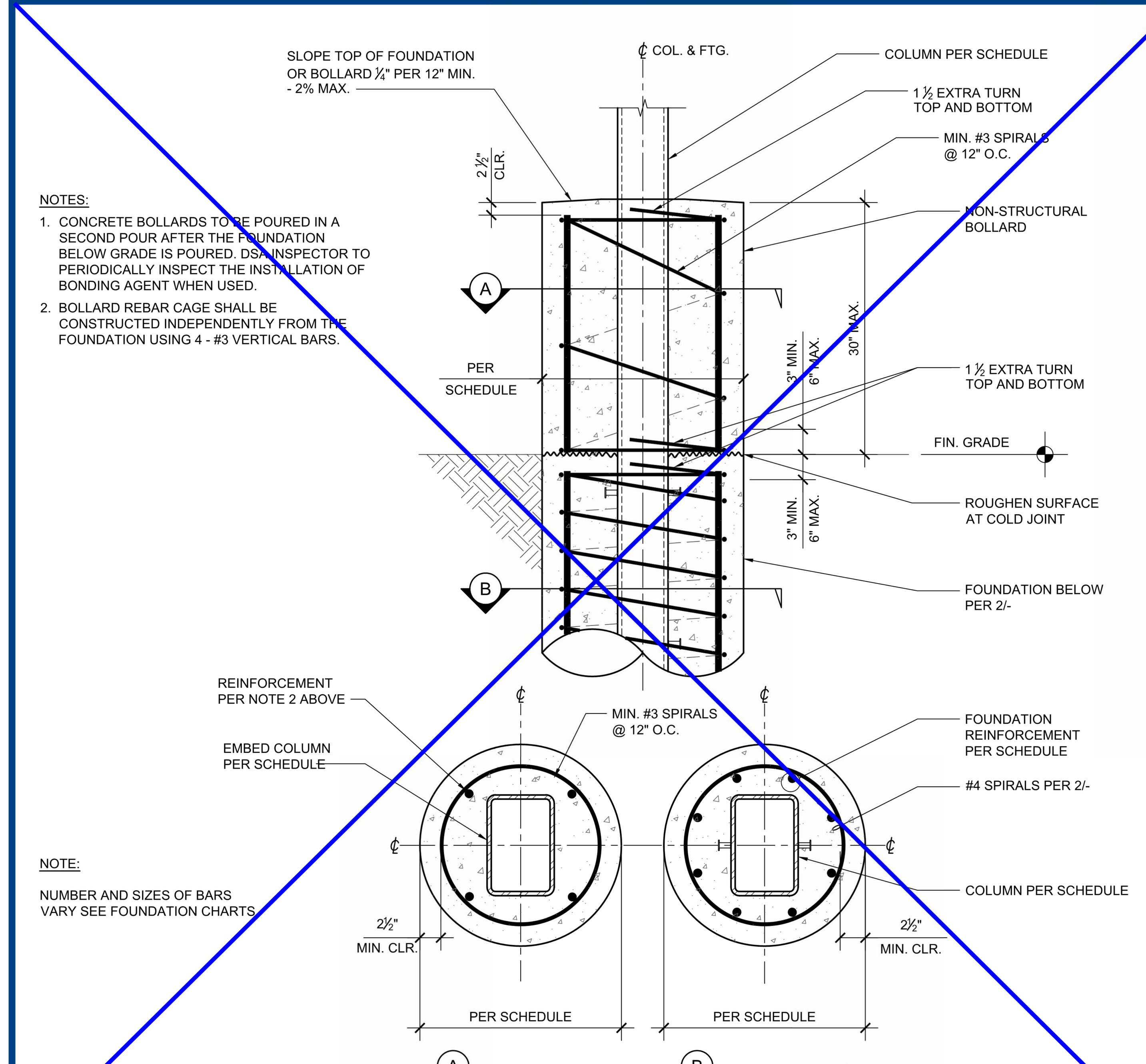

NOTES:
1. CONCRETE BOLLARDS TO BE POURED IN A SECOND POUR AFTER THE FOUNDATION BELOW GRADE IS POURED. DSA INSPECTOR TO PERIODICALLY INSPECT THE INSTALLATION OF BONDING AGENT WHEN USED.
2. BOLLARD REBAR CAGE SHALL BE CONSTRUCTED INDEPENDENTLY FROM THE FOUNDATION USING 4 - #3 VERTICAL BARS.

NOTE:
NUMBER AND SIZES OF BARS VARY SEE FOUNDATION CHARTS

☐ BOLLARD REQUIRED
3 / - OPTIONAL NON-STRUCTURAL BOLLARD
1" = 1'-0"

4 STEL ENGINEERING
26030 ACERO
MISSION VIEJO, CA 92691
949.305.1150 | FAX 949.305.1420

M BAR C CONSTRUCTION INC.
1770 LA COSTA MEADOWS DRIVE SAN MARCOS, CA 92078 ERIK KRIVOKOPICH
PHONE: (760) 744-4131 FAX: (760) 744-4449 ERIK@MBARCONLINE.COM
LIC # 869960 B AND C51 (775) 787-8845

ENGINEER'S APPROVAL
REGISTERED PROFESSIONAL ENGINEER DUSTIN K. ROSEPINK S 5885 STRUCTURAL STATE OF CALIFORNIA

BID INFORMATION
THE STRUCTURES AND DESIGNS IN THIS PC ARE PROPRIETARY TO M BAR C CONSTRUCTION, INC. AND 4 S.T.E.L. ENGINEERING, INC. ALL SITES USING THIS PC: M BAR C CONSTRUCTION, INC. SHALL BE THE STEEL CONTRACTOR & 4 S.T.E.L. ENGINEERING, INC. SHALL BE THE SEOR. SEE THE STANDARD NOTES FOR PC USE ON S-1 FOR ADDITIONAL REQUIREMENTS.

PRE-CHECK (PC) DOCUMENT
CODE: 2022 CBC
A SEPARATE PROJECT APPLICATION FOR CONSTRUCTION IS REQUIRED

APPROVED
DIV. OF THE STATE ARCHITECT
APP: 04-123080 PC
REVIEWED FOR
SS ☑ FLS ☑ ACS ☑ CG ☐
DATE: 11/25/2024

SITE SPECIFIC INFORMATION
VISALIA CAMPUS UNIV. CENTER
COLLEGE OF THE SEQUOIAS
915 S. MOONEY BLVD,
VISALIA, CA 93277

REVISIONS		
MARK	DATE	DESCRIPTION

UG 22.1.1

4 STEL JOB #	MC02-V3-1-1
DATE	11-18-24
DRAWN BY	GM
CHECKED	RWS

OT-STRUCTURE PIER FOUNDATION SCHEDULE

S-13

DRAWINGS, SPECIFICATIONS AND OTHER DOCUMENTS, PREPARED BY THE DESIGN PROFESSIONAL (DP) AND THE DP'S CONSULTANTS ARE INSTRUMENTS OF SERVICE FOR USE SOLELY WITH RESPECT TO THIS PROJECT. THIS INCLUDES DOCUMENTS IN ELECTRONIC FORM. THE DP AND THE DP'S CONSULTANTS SHALL BE DEEMED THE AUTHORS AND OWNERS OF THEIR RESPECTIVE INSTRUMENTS OF SERVICE AND SHALL RETAIN ALL COMMON LAW, STATUTORY AND OTHER RESERVED RIGHTS, INCLUDING COPYRIGHTS. THE INSTRUMENTS OF SERVICE SHALL NOT BE USED BY THE OWNER FOR FUTURE ADDITIONS OR ALTERATIONS TO THIS PROJECT OR FOR OTHER PROJECTS, WITHOUT THE PRIOR WRITTEN AGREEMENT OF THE DP. ANY UNAUTHORIZED USE OF THE INSTRUMENTS OF SERVICE SHALL BE AT THE OWNER'S SOLE RISK AND WITHOUT LIABILITY TO THE DP AND THE DP'S CONSULTANTS.

NOTE: IF DWG. IS NOT 24 x 36, IT IS NOT FULL SIZE

IDENTIFICATION STAMP
DIV. OF THE STATE ARCHITECT
APP: 02-122821 INC: 2
REVIEWED FOR
SS ☑ FLS ☑ ACS ☑
DATE: 11/20/2025

OT-STRUCTURE BEAM-TO-COLUMN SCHEDULE

USE	I.D. #	MAX. WIDTH W	MAX. COLUMN SPACING S	MAX. COLUMN HEIGHT	MAX. ROOF SLOPE	ROOF SNOW LOAD (PSF)	BEAM TO COLUMN DETAIL	BEAM TO COLUMN SIDE PLATE 't' x 'B' x 'L' (IN)	SIDE PLATE WELDS		
									MIN. THICKNESS t	MIN. HORIZONTAL LENGTH L_h	MIN. VERTICAL LENGTH L_v
☐	OT-101	22'-0"	18'-0"	15'-0"	7"	5	2/S-15	5/8 x 9 3/4 x 1'-9 3/4"	1/4"	9.5"	9.5"
☐	OT-102	22'-0"	18'-0"	15'-0"	7"	5	2/S-15	3/8 x 9 3/4 x 1'-9 3/4"	3/16"	9.5"	9.5"
☐	OT-103	22'-0"	28'-6"	15'-0"	7"	5	2/S-15	1 x 9 1/4 x 1'-9 1/2"	3/8"	9"	9"
☐	OT-104	22'-0"	28'-6"	15'-0"	7"	5	2/S-15	5/8 x 9 1/2 x 1'-9 7/8"	1/4"	9.5"	9.5"
☐	OT-105	22'-0"	32'-6"	15'-0"	7"	0	2/S-15	1 1/4 x 9 1/4 x 1'-9 1/2"	7/16"	9"	9"
☐	OT-106	22'-0"	32'-6"	15'-0"	7"	5	2/S-15	3/4 x 9 1/2 x 1'-9 7/8"	1/4"	9.5"	9.5"
☐	OT-107	22'-0"	35'-9"	15'-0"	7"	5	2/S-15	1 1/2 x 8 3/4 x 1'-9 3/8"	1/2"	8.5"	9"
☐	OT-108	22'-0"	35'-9"	15'-0"	7"	5	2/S-15	3/4 x 9 1/2 x 1'-9 7/8"	1/4"	9.5"	9.5"
☐	OT-109	28'-3"	18'-0"	15'-0"	7"	5	2/S-15	3/4 x 9 1/2 x 1'-9 1/2"	5/16"	9.5"	9"
☒	OT-110	28'-3"	28'-6"	15'-0"	7"	5	2/S-15	1 1/2 x 8 3/4 x 1'-8 3/4"	1/2"	8.5"	8.5"
☐	OT-111	22'-0"	18'-0"	20'-0"	7"	5	2/S-15	5/8 x 9 1/2 x 1'-9 7/8"	1/4"	9.5"	9.5"
☐	OT-112	22'-0"	18'-0"	20'-0"	7"	0	2/S-15	3/8 x 9 3/4 x 1'-9 3/4"	3/16"	9.5"	9.5"
☐	OT-113	22'-0"	28'-6"	20'-0"	7"	0	2/S-15	1 x 9 1/4 x 1'-9 1/2"	3/8"	9"	9"
☐	OT-114	22'-0"	28'-6"	20'-0"	7"	5	2/S-15	5/8 x 9 1/2 x 1'-9 7/8"	1/4"	9.5"	9.5"
☐	OT-115	22'-0"	32'-6"	20'-0"	7"	5	2/S-15	1 1/2 x 8 3/4 x 1'-9 3/8"	1/2"	8.5"	9"
☐	OT-116	22'-0"	32'-6"	20'-0"	7"	5	2/S-15	3/4 x 9 1/4 x 1'-9 7/8"	1/4"	9"	9.5"
☐	OT-117	22'-0"	35'-9"	20'-0"	7"	5	2/S-15	1 1/2 x 8 3/4 x 1'-9 3/8"	1/2"	8.5"	9"
☐	OT-118	22'-0"	35'-9"	20'-0"	7"	5	2/S-15	7/8 x 9 1/4 x 1'-9 7/8"	5/16"	9"	9.5"
☐	OT-119	28'-3"	18'-0"	20'-0"	7"	5	2/S-15	7/8 x 9 1/2 x 1'-9 1/2"	5/16"	9.5"	9"
☐	OT-120	28'-3"	28'-6"	20'-0"	7"	5	2/S-15	1 1/2 x 8 3/4 x 1'-8 3/4"	9/16"	8.5"	8.5"
☐	OT-151	22'-0"	18'-0"	15'-0"	7"	20	2/S-15	1 1/4 x 9 1/4 x 1'-9 1/2"	3/8"	9"	9"
☐	OT-152	22'-0"	18'-0"	15'-0"	7"	20	2/S-15	5/8 x 9 1/2 x 1'-9 7/8"	1/4"	9.5"	9.5"
☐	OT-153	22'-0"	28'-6"	15'-0"	7"	20	2/S-15	1 1/2 x 10 x 2'-0 5/8"	1/2"	10"	10.5"
☐	OT-154	22'-0"	28'-6"	15'-0"	7"	20	2/S-15	1 x 9 1/4 x 1'-9 1/2"	3/8"	9"	9"
☐	OT-155	22'-0"	32'-6"	15'-0"	7"	20	2/S-15	1 3/4 x 10 x 2'-0 5/8"	9/16"	10"	10.5"
☐	OT-156	22'-0"	32'-6"	15'-0"	7"	20	2/S-15	1 1/4 x 8 3/4 x 1'-9 3/8"	7/16"	8.5"	9"
☐	OT-157	22'-0"	35'-9"	15'-0"	7"	20	2/S-15	2 x 10 x 1'-11 7/8"	11/16"	10"	9.5"
☐	OT-158	22'-0"	35'-9"	15'-0"	7"	20	2/S-15	1 1/2 x 8 3/4 x 1'-9 3/8"	1/2"	8.5"	9"
☐	OT-159	28'-3"	18'-0"	15'-0"	7"	20	2/S-15	1 1/2 x 8 3/4 x 1'-8 3/4"	9/16"	8.5"	8.5"
☐	OT-160	28'-3"	28'-6"	15'-0"	7"	20	2/S-15	1 3/4 x 10 x 1'-11 7/8"	5/8"	10"	9.5"
☐	OT-161	22'-0"	18'-0"	20'-0"	7"	20	2/S-15	1 1/4 x 9 1/4 x 1'-9 1/2"	3/8"	9"	9"
☐	OT-162	22'-0"	18'-0"	20'-0"	7"	20	2/S-15	5/8 x 9 1/2 x 1'-9 7/8"	1/4"	9.5"	9.5"
☐	OT-163	22'-0"	28'-6"	20'-0"	7"	20	2/S-15	1 1/2 x 10 x 2'-0 5/8"	1/2"	10"	10.5"
☐	OT-164	22'-0"	28'-6"	20'-0"	7"	20	2/S-15	1 x 9 1/4 x 1'-9 1/2"	3/8"	9"	9"
☐	OT-165	22'-0"	32'-6"	20'-0"	7"	20	2/S-15	1 3/4 x 10 x 2'-0 5/8"	9/16"	10"	10.5"
☐	OT-166	22'-0"	32'-6"	20'-0"	7"	20	2/S-15	1 1/2 x 8 3/4 x 1'-9 3/8"	7/16"	8.5"	9"
☐	OT-167	22'-0"	35'-9"	20'-0"	7"	20	2/S-15	2 1/4 x 9 1/4 x 2'-0"	3/4"	9"	9.5"
☐	OT-168	22'-0"	35'-9"	20'-0"	7"	20	2/S-15	1 x 10 3/4 x 2'-0 7/8"	3/8"	10.5"	10.5"
☐	OT-169	28'-3"	18'-0"	20'-0"	7"	20	2/S-15	1 1/2 x 8 3/4 x 1'-8 3/4"	9/16"	8.5"	8.5"
☐	OT-170	28'-3"	28'-6"	20'-0"	7"	20	2/S-15	1 3/4 x 10 x 1'-11 7/8"	11/16"	10"	9.5"

1. MULTIPLE STRUCTURE ID'S MAY BE SELECTED WITHIN THE SAME SITE AND/OR STRUCTURE.
2. WHEN UTILIZING A STRUCTURE ID READ FROM WITHIN THAT ID ROW ONLY.

1 - OT-STRUCTURE BEAM-TO-COLUMN SCHEDULE

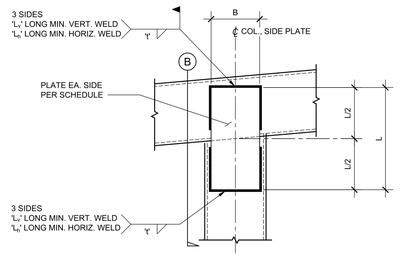

A ELEVATION

NOTES:

1. WELD TO BE ALL AROUND PLATE. PORTIONS OF THE WELD ALL AROUND JOINT ARE STRUCTURAL AND OTHER PORTIONS ARE NON STRUCTURAL. MINIMUM STRUCTURAL WELD LENGTHS 'L' AND 'L_h' PER SCHEDULE. WELDS BEYOND THESE MIN. LENGTHS ARE NON STRUCTURAL SEAL WELDS.
2. PURLIN, SOLAR PANEL NOT SHOWN

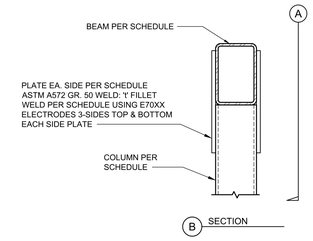

B SECTION

2 - BEAM TO COLUMN
1" = 1'-0"

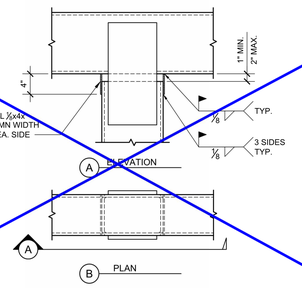

3 - BEAM TO COLUMN CORROSION PROTECTION OPTION 1
1" = 1'-0"

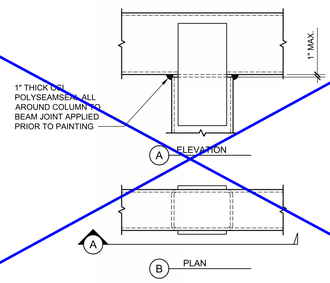

4 - BEAM TO COLUMN CORROSION PROTECTION OPTION 2
1" = 1'-0"

4 STEL ENGINEERING
26030 ACERO
MISSION VIEJO, CA 92691
949.305.1150 | FAX 949.305.1420

M BAR C CONSTRUCTION INC.
1770 LA COSTA MEADOWS DRIVE
SAN MARCOS, CA 92078
ERIK KRVOKOPICH
PHONE: (760) 744-4121
FAX: (760) 744-4497
ERIK@MBARCONLINE.COM
LIC # B699AB B 2007-121 (770) 787-8445

ENGINEER'S APPROVAL



BID INFORMATION

THE STRUCTURES AND DESIGNS IN THIS PC ARE PROPRIETARY TO M BAR C CONSTRUCTION, INC. AND 4 S.T.E.L. ENGINEERING, INC. ALL SITES USING THIS PC: M BAR C CONSTRUCTION, INC. SHALL BE THE STEEL CONTRACTOR & 4 S.T.E.L. ENGINEERING, INC. SHALL BE THE SEOR. SEE THE STANDARD NOTES FOR PC USE ON S-1 FOR ADDITIONAL REQUIREMENTS.

PRE-CHECK (PC) DOCUMENT

CODE: 2022 CBC

A SEPARATE PROJECT APPLICATION FOR CONSTRUCTION IS REQUIRED

APPROVED
DIV. OF THE STATE ARCHITECT
APP: 04-122080 PC
REVIEWED FOR
SS ☑ FLS ☑ ACS ☒ CG ☐
DATE: 11/25/2024

SITE SPECIFIC INFORMATION

VISALIA CAMPUS UNIV. CENTER
COLLEGE OF THE SEQUOIAS
915 S. MOONEY BLVD,
VISALIA, CA 93277

REVISIONS

MARK	DATE	DESCRIPTION

UG 22.1.1

4 STEL JOB #	MC02-V3-1-1
DATE	11-18-24
DRAWN BY	GM
CHECKED	RWS

OT-STRUCTURE BEAM-TO-COLUMN SCHEDULE

S-15

NOTE: IF DWG. IS NOT 24 x 36, IT IS NOT FULL SIZE

DRAWINGS, SPECIFICATIONS AND OTHER DOCUMENTS, PREPARED BY THE DESIGN PROFESSIONAL (DP) AND THE DP'S CONSULTANTS ARE INSTRUMENTS OF SERVICE FOR USE SOLELY WITH RESPECT TO THIS PROJECT. THIS INCLUDES DOCUMENTS IN ELECTRONIC FORM. THE DP AND THE DP'S CONSULTANTS SHALL BE DEEMED THE AUTHORS AND OWNERS OF THEIR RESPECTIVE INSTRUMENTS OF SERVICE AND SHALL RETAIN ALL COMMON LAW, STATUTORY AND OTHER RESERVED RIGHTS, INCLUDING COPYRIGHTS. THE INSTRUMENTS OF SERVICE SHALL NOT BE USED BY THE OWNER FOR FUTURE ADDITIONS OR ALTERATIONS TO THIS PROJECT OR FOR OTHER PROJECTS, WITHOUT THE PRIOR WRITTEN AGREEMENT OF THE DP. ANY UNAUTHORIZED USE OF THE INSTRUMENTS OF SERVICE SHALL BE AT THE OWNER'S SOLE RISK AND WITHOUT LIABILITY TO THE DP AND THE DP'S CONSULTANTS.

IDENTIFICATION STAMP
DIV. OF THE STATE ARCHITECT
APP: 02-122821 INC: 2
REVIEWED FOR
SS ☑ FLS ☑ ACS ☑
DATE: 11/20/2025

PURLIN SCHEDULE

USE	I.D. #	MULTI SPAN PURLIN	PURLIN[8] SPACING (PS)	MAX. COLUMN SPACING (S)	ROOF SNOW LOAD (PSF)	MAX. CANTILEVER SPAN (6) (CS) MIDSPAN BLOCKING	MAX. CANTILEVER SPAN (6) (CS) NO BLOCKING	PURLIN SECTION	PURLIN DETAIL	BLOCKING SECTION	BLOCKING DETAIL	ALTERNATE PURLIN SECTION	ALTERNATE PURLIN DETAIL	ALTERNATE BLOCKING SECTION	ALTERNATE BLOCKING DETAIL	BLOCKING TO PURLIN DETAILS BOLT DIA. d_3 (IN)	BLOCKING TO PURLIN DETAILS INTERIOR	BLOCKING TO PURLIN DETAILS EXTERIOR	PURLIN TO BEAM DETAILS INTERIOR PURLINS SPLICE	INTERIOR PURLINS CONTINUOUS	EXTERIOR PURLINS SPLICE	EXTERIOR PURLINS CONTINUOUS	INTERIOR CLIP ANGLE THICKNESS t_1 (IN)	INTERIOR CLIP ANGLE BOLT DIA. d_1 (IN)	EXTERIOR END PLATE THICKNESS t_2 (IN)	EXTERIOR END PLATE BOLT DIA. d_2 (IN)	PURLIN BRACING DETAILS
☐	P101		47"	18'-0"	0	10'-6"	6'-0"	CS12 x 4 x 0.071 (14GA)	2/S-5	CS9 x 2.5 x 0.057 (16 GA)	3/S-5	CS8 x 3.5 x 0.071 (14GA)	2/S-5	CS5 x 2.5 x 0.057 (16 GA)	3/S-5	1/2	8/S-17	9/S-17	1/S-17	12/S-17	2/S-17	13/S-17	3/8	1/2	5/16	1/2	N/A
☐	P102		47"	18'-0"	5	10'-6"	6'-0"	CS12 x 4 x 0.071 (14GA)	2/S-5	CS9 x 2.5 x 0.057 (16 GA)	3/S-5	CS8 x 3.5 x 0.071 (14GA)	2/S-5	CS5 x 2.5 x 0.057 (16 GA)	3/S-5	1/2	8/S-17	9/S-17	1/S-17	12/S-17	2/S-17	13/S-17	3/8	1/2	5/16	1/2	N/A
☐	P103		47"	18'-0"	20	10'-0"	5'-0"	CS12 x 4 x 0.071 (14GA)	2/S-5	CS9 x 2.5 x 0.057 (16 GA)	3/S-5	CS8 x 4 x 0.071 (14GA)	2/S-5	CS5 x 2.5 x 0.057 (16 GA)	3/S-5	1/2	8/S-17	9/S-17	1/S-17	12/S-17	2/S-17	13/S-17	3/8	1/2	3/8	1/2	N/A
☐	P104		47"	21'-6"	0	11'-6"	6'-6"	CS12 x 4 x 0.071 (14GA)	2/S-5	CS9 x 2.5 x 0.057 (16 GA)	3/S-5	CS8 x 4 x 0.071 (14GA)	2/S-5	CS5 x 2.5 x 0.057 (16 GA)	3/S-5	1/2	8/S-17	9/S-17	1/S-17	12/S-17	2/S-17	13/S-17	1/2	1/2	3/8	1/2	N/A
☐	P105		47"	21'-6"	5	11'-6"	6'-6"	CS12 x 4 x 0.071 (14GA)	2/S-5	CS9 x 2.5 x 0.057 (16 GA)	3/S-5	CS8 x 4 x 0.071 (14GA)	2/S-5	CS5 x 2.5 x 0.057 (16 GA)	3/S-5	1/2	8/S-17	9/S-17	1/S-17	12/S-17	2/S-17	13/S-17	1/2	1/2	3/8	1/2	N/A
☐	P106		47"	21'-6"	20	11'-0"	6'-0"	CS12 x 4 x 0.071 (14GA)	2/S-5	CS9 x 2.5 x 0.057 (16 GA)	3/S-5	CS10 x 4 x 0.071 (14GA)	2/S-5	CS7 x 2.5 x 0.057 (16 GA)	3/S-5	1/2	8/S-17	9/S-17	1/S-17	12/S-17	2/S-17	13/S-17	1/2	1/2	3/8	1/2	N/A
☒	P107		47"	28'-6"	0	13'-0"	8'-0"	CS12 x 4 x 0.071 (14GA)	2/S-5	CS9 x 2.5 x 0.057 (16 GA)	3/S-5	CS12 x 3.5 x 0.071 (14GA)	2/S-5	CS9 x 2.5 x 0.057 (16 GA)	3/S-5	1/2	8/S-17	9/S-17	1/S-17	12/S-17	2/S-17	13/S-17	1/2	1/2	3/8	1/2	10, 11/S-17
☐	P108		47"	28'-6"	5	13'-0"	8'-0"	CS12 x 4 x 0.071 (14GA)	2/S-5	CS9 x 2.5 x 0.057 (16 GA)	3/S-5	CS12 x 3.5 x 0.071 (14GA)	2/S-5	CS9 x 2.5 x 0.057 (16 GA)	3/S-5	1/2	8/S-17	9/S-17	1/S-17	12/S-17	2/S-17	13/S-17	1/2	1/2	3/8	1/2	10, 11/S-17
☐	P109		47"	28'-6"	20	13'-0"	7'-6"	CS12 x 4 x 0.102 (12GA)	2/S-5	CS9 x 2.5 x 0.057 (16 GA)	3/S-5	CS12 x 3.5 x 0.102 (12GA)	2/S-5	CS9 x 2.5 x 0.057 (16 GA)	3/S-5	1/2	8/S-17	9/S-17	1/S-17	12/S-17	2/S-17	13/S-17	1/2	1/2	3/8	1/2	10, 11/S-17
☐	P110[9,11]	✓	47"	32'-6"	0	12'-8"	n/a	CS12 x 4 x 0.071 (14GA)	2/S-5	CS9 x 2.5 x 0.057 (16 GA)	3/S-5	CS10 x 3.5 x 0.071 (14GA)	2/S-5	CS7 x 2.5 x 0.057 (16 GA)	3/S-5	1/2	8/S-17	9/S-17	3/S-16	12/S-17	3/S-16	13/S-17	1/2	1/2	1/2	1/2	10, 11/S-17
☐	P111[9,11]	✓	47"	32'-6"	5	12'-8"	n/a	CS12 x 4 x 0.071 (14GA)	2/S-5	CS9 x 2.5 x 0.057 (16 GA)	3/S-5	CS10 x 3.5 x 0.071 (14GA)	2/S-5	CS7 x 2.5 x 0.057 (16 GA)	3/S-5	1/2	8/S-17	9/S-17	3/S-16	12/S-17	3/S-16	13/S-17	1/2	1/2	1/2	1/2	10, 11/S-17
☐	P112[9]	✓	47"	32'-6"	20	12'-8"	n/a	CS12 x 4 x 0.102 (12GA)	2/S-5	CS9 x 2.5 x 0.057 (16 GA)	3/S-5	CS10 x 3.5 x 0.102 (12GA)	2/S-5	CS7 x 2.5 x 0.057 (16 GA)	3/S-5	1/2	8/S-17	9/S-17	3/S-16	12/S-17	3/S-16	13/S-17	1/2	1/2	3/8	1/2	10, 11/S-17
☐	P113[10]	✓	47"	35'-9"	0	12'-6"	n/a	CS12 x 4 x 0.071 (14GA)	2/S-5	CS9 x 2.5 x 0.057 (16 GA)	3/S-5	CS10 x 4 x 0.071 (14GA)	2/S-5	CS7 x 2.5 x 0.057 (16 GA)	3/S-5	1/2	8/S-17	9/S-17	3/S-16	12/S-17	3/S-16	13/S-17	1/2	1/2	1/2	1/2	10, 11/S-17
☐	P114[10]	✓	47"	35'-9"	5	12'-6"	n/a	CS12 x 4 x 0.071 (14GA)	2/S-5	CS9 x 2.5 x 0.057 (16 GA)	3/S-5	CS10 x 4 x 0.071 (14GA)	2/S-5	CS7 x 2.5 x 0.057 (16 GA)	3/S-5	1/2	8/S-17	9/S-17	3/S-16	12/S-17	3/S-16	13/S-17	1/2	1/2	1/2	1/2	10, 11/S-17
☐	P115[10]	✓	47"	35'-9"	20	12'-6"	n/a	CS12 x 4 x 0.102 (12GA)	2/S-5	CS9 x 2.5 x 0.057 (16 GA)	3/S-5	CS12 x 3.5 x 0.102 (12GA)	2/S-5	CS9 x 2.5 x 0.057 (16 GA)	3/S-5	1/2	8/S-17	9/S-17	3/S-16	12/S-17	3/S-16	13/S-17	1/2	1/2	1/2	1/2	10, 11/S-17

NOTES:

1. MULTIPLE STRUCTURE ID'S MAY BE SELECTED WITHIN THE SAME SITE AND/OR STRUCTURE.
2. WHEN UTILIZING A STRUCTURE ID READ FROM WITHIN THAT ID ROW ONLY.
3. BEAM TO PURLIN DETAIL AT SPLICE SHALL NOT OCCUR ON A PURLIN WITH A CANTILEVER SPAN.
4. WHEN THE CANTILEVER SPAN SHOWN ON THE SITE SPECIFIC SHEETS DOES NOT EXCEED THE MAX CANTILEVER SPAN NO BLOCKING, MID SPAN BLOCKING OF THE CANTILEVER IS NOT REQUIRED.
5. PURLIN SPACING MAY BE INCREASED BEYOND THE MAXIMUMS GIVEN IN THE SCHEDULE ABOVE AS LONG AS THE TRIBUTARY WIDTH TO THE PURLIN DOES NOT EXCEED PS.
6. LONG PURLIN CANTILEVERS INCREASE THE TRIBUTARY AREA TO THE END BEAM AND MAY REQUIRE THE SUPPORTING MEMBERS TO INCREASE IN SIZE PER THE PURLIN CANTILEVER SCHEDULE ADJACENT. THE LEFT COLUMN OF THE SCHEDULE REPRESENTS THE COLUMN SPACING CURRENTLY USED, AND THE CENTER COLUMN OF THE SCHEDULE REPRESENTS THE PURLIN CANTILEVER RANGE. USING THE COLUMN SPACING AND PURLIN CANTILEVER ADJACENT TO THE END BEAM, DETERMINE THE APPROPRIATE MEMBER SIZING PER THE RIGHTMOST COLUMN OF THE SCHEDULE. FOR EXAMPLES, SEE DETAIL 2/-.
7. MINIMUM PURLIN SPACING WHERE PURLIN BRACING OCCURS IS 38.5". NO MINIMUM SPACING IS REQUIRED OTHER LOCATIONS.
8. WHEN PURLIN CANTILEVER DOES NOT REQUIRE BLOCKING PURLIN BRACING ON THE CANTILEVER IS NOT REQUIRED.
9. ☐ ALL STRUCTURES UTILIZING THIS PURLIN OPTION SHALL BE GOVERNED BY THE SOLAR PANEL DIMENSIONS AND NO OTHER SITE CONDITIONS. STRUCTURES MUST HAVE A MINIMUM OF 3 COLUMNS. STRUCTURES CANNOT HAVE PANELS WIDER THAN 42". LAYOUTS REQUIRE THAT THE CANTILEVER PURLIN LENGTH BE EXACTLY 3.5x(PANEL WIDTH PLUS PANEL GAP), THE COLUMN SPACING MUST BE EXACTLY 9x(PANEL WIDTH PLUS PANEL GAP), AND PURLIN SPLICE LOCATION "L" IN DETAIL 3/S-16 EXACTLY 1.5x(PANEL WIDTH PLUS PANEL GAP). THE PURLIN MAX. CANTILEVER LENGTH, COLUMN SPACING, AND SPLICE LOCATION "L" MUST ALL BE RATIOS OF THE PANEL WIDTH, AND CANNOT DEVIATE FROM THE SPACING PREVIOUSLY STATED.
10. ☐ ALL STRUCTURES UTILIZING THIS PURLIN OPTION SHALL BE GOVERNED BY THE SOLAR PANEL DIMENSIONS AND NO OTHER SITE CONDITIONS. STRUCTURES MUST HAVE A MINIMUM OF 3 COLUMNS. STRUCTURES CANNOT HAVE PANELS WIDER THAN 42". LAYOUTS REQUIRE THAT THE CANTILEVER PURLIN LENGTH BE EXACTLY 3.5x(PANEL WIDTH PLUS PANEL GAP), THE COLUMN SPACING MUST BE EXACTLY 10x(PANEL WIDTH PLUS PANEL GAP), AND PURLIN SPLICE LOCATION "L" IN DETAIL 3/S-16 EXACTLY 1.5x(PANEL WIDTH PLUS PANEL GAP). THE PURLIN MAX. CANTILEVER LENGTH, COLUMN SPACING, AND SPLICE LOCATION "L" MUST ALL BE RATIOS OF THE PANEL WIDTH, AND CANNOT DEVIATE FROM THE SPACING PREVIOUSLY STATED.
11. ☐ ALTERNATE PURLIN SIZE CAN BE C8x4x0.071 (14 GA) WITH CS5x2.5x0.057 (16 GA) BLOCKING.

PURLIN CANTILEVER SCHEDULE

USE	COLUMN SPACING	MAX. CANTILEVER	REQUIRED MEMBER PC I.D. # PER S-7, S-12
☐	18'-0"	CS ≤ 7'-3"	18'-0"
☐	18'-0"	7'-3" < CS ≤ 8'-9"	21'-6"
☐	18'-0"	8'-9" < CS ≤ 10'-6"	28'-6"
☐	21'-6"	CS ≤ 8'-9"	21'-6"
☐	21'-6"	8'-9" < CS ≤ 11'-6"	28'-6"
☒	28'-6"	CS ≤ 11-9"	28'-6"
☐	28'-6"	11'-9" < CS ≤ 13'-0"	32'-6"

1 / - PURLIN SCHEDULE

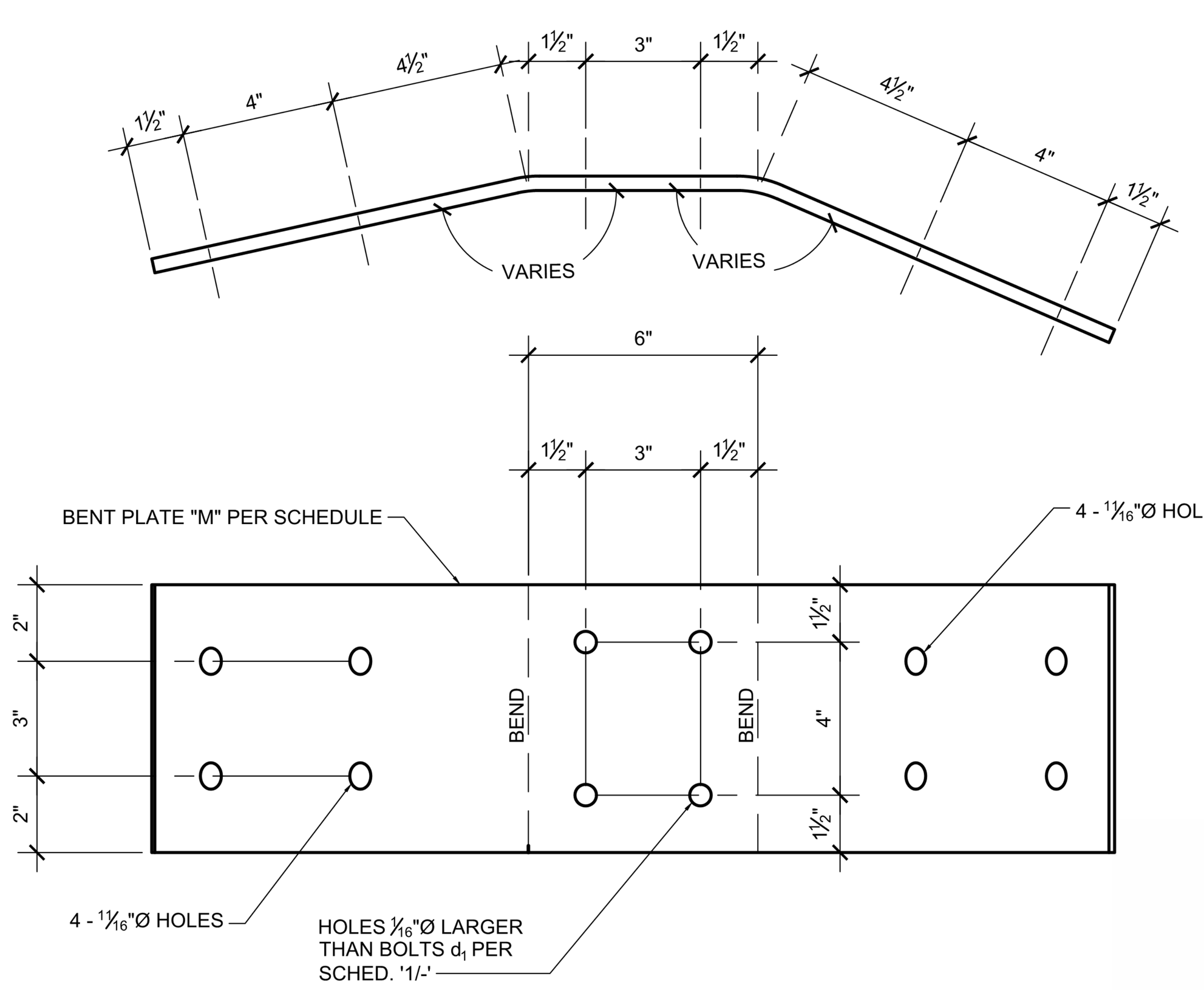

PURLIN BRACE PLATE		
USE	MAX. COLUMN SPACING "S" FROM 1/-	MATERIAL "M"
☒	"S" <= 28'-6"	12 GA 55 KSI
☐	"S" <= 32'-6"	10 GA 55 KSI
☐	"S" <= 35'-9"	10 GA 55 KSI

4 / - PURLIN BRACE PLATE 3"=1'-0"

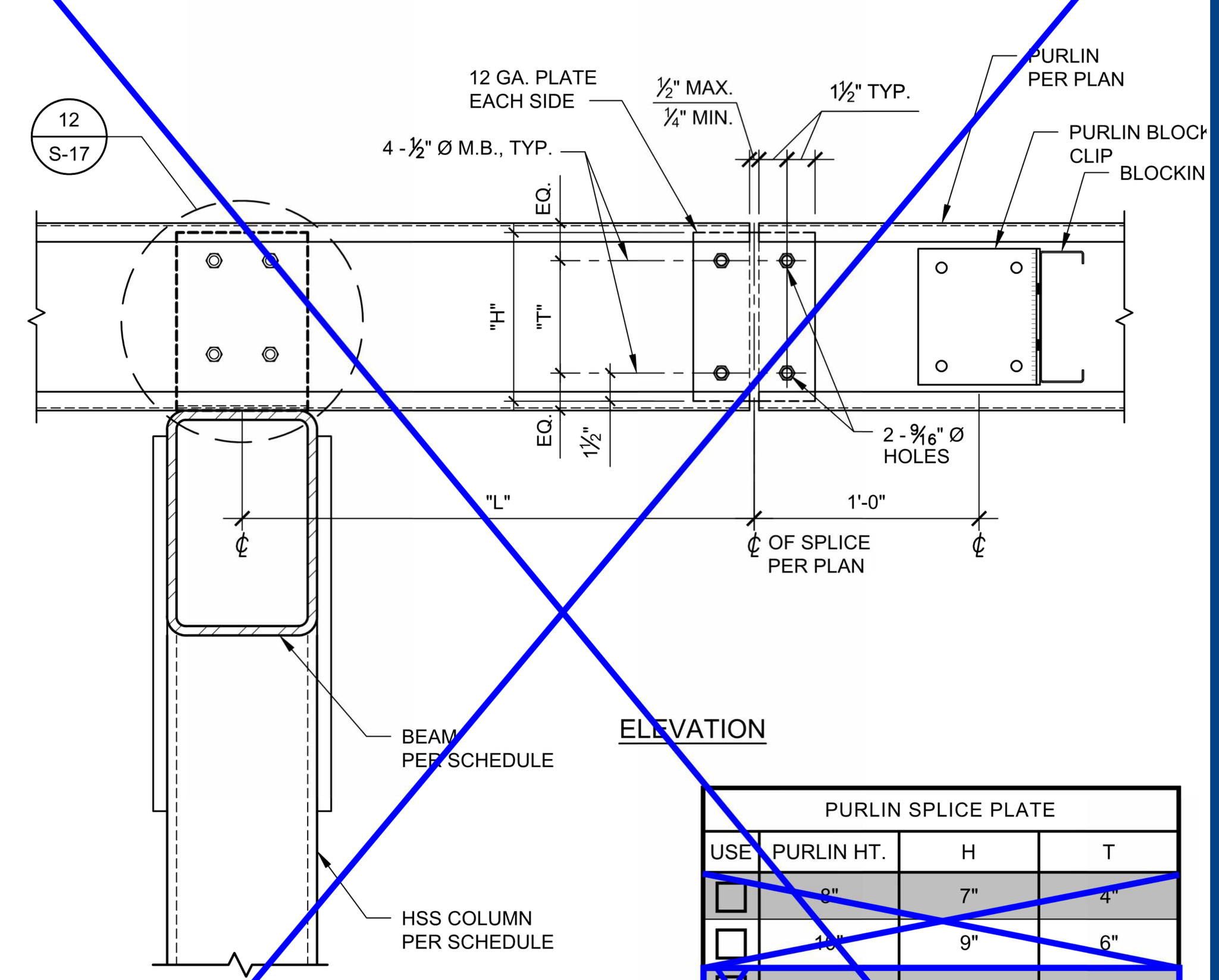

PURLIN SPLICE PLATE			
USE	PURLIN HT.	H	T
☐	8"	7"	4"
☐	10"	9"	6"
☒	12"	11"	8"
☐	14"	13"	10"

NOTE:
L = 1.5 x (PANEL WIDTH + PANEL GAP)
(SEE NOTES 9 AND 10 ON 1/- FOR MULTI-SPAN PURLIN REQUIREMENTS)

3 / - PURLIN SPLICE 1-1/2"=1'-0"

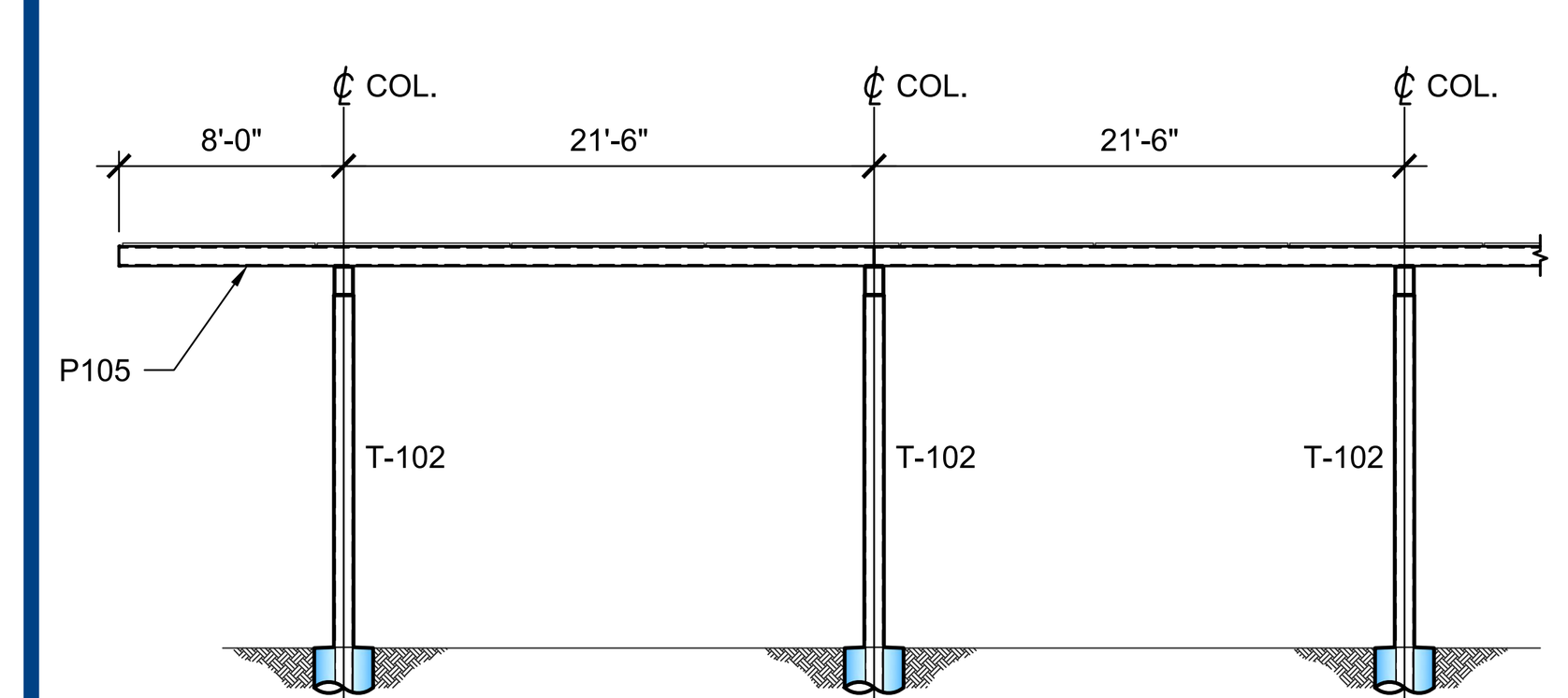

PURLIN CANTILEVER DOES NOT EXCEED LIMITS SHOWN IN PURLIN SCHEDULE '1/-'
NO END MEMBER SIZE INCREASE REQUIRED.

EXAMPLE 1

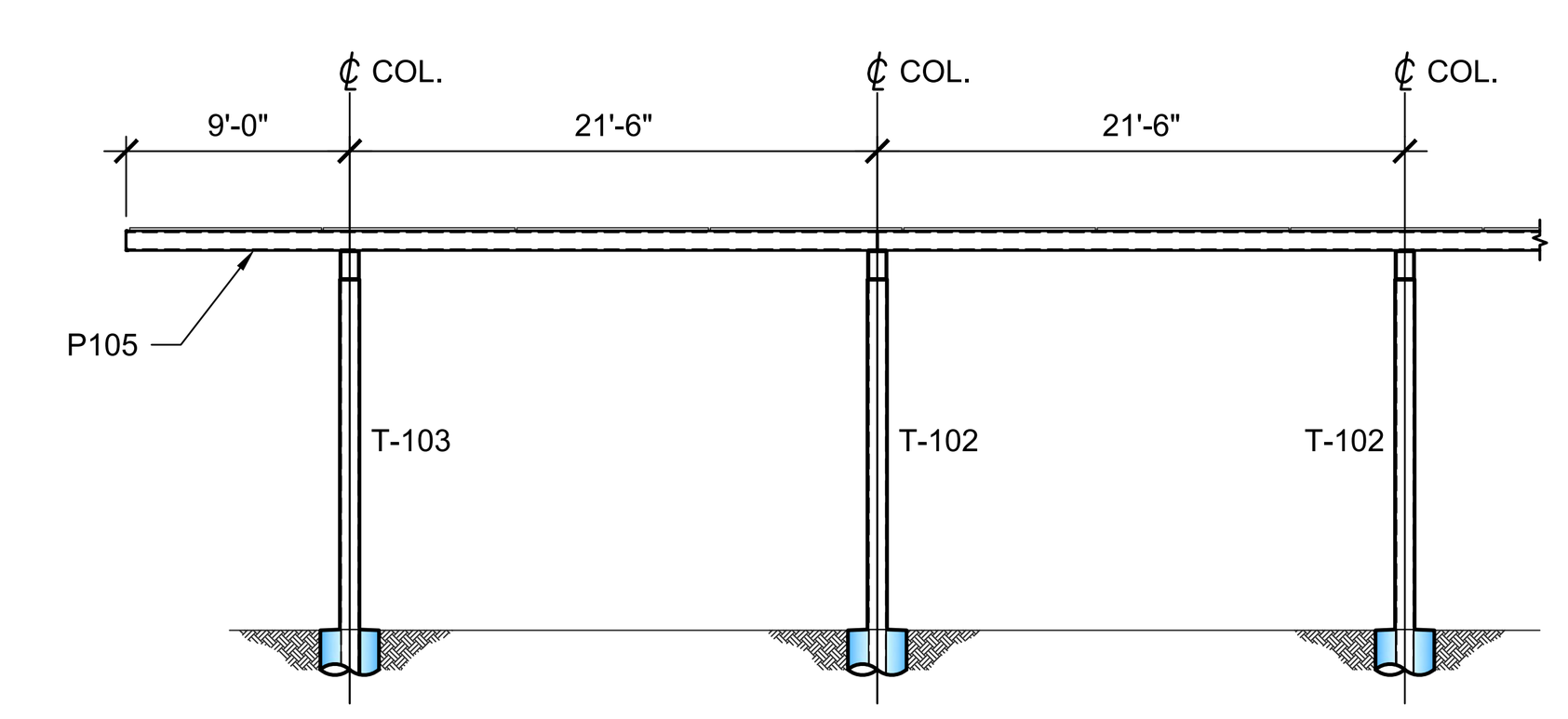

PURLIN CANTILEVER EXCEEDS LIMITS SHOWN IN PURLIN SCHEDULE '1/-'
END MEMBER SIZE INCREASE REQUIRED PER PURLIN CANTILEVER SCHEDULE.

EXAMPLE 2

2 / - PURLIN CONDITION EXAMPLES N.T.S.

DRAWINGS, SPECIFICATIONS AND OTHER DOCUMENTS, PREPARED BY THE DESIGN PROFESSIONAL (DP) AND THE DP'S CONSULTANTS ARE INSTRUMENTS OF SERVICE FOR USE SOLELY WITH RESPECT TO THIS PROJECT. THIS INCLUDES DOCUMENTS IN ELECTRONIC FORM. THE DP AND THE DP'S CONSULTANTS SHALL BE DEEMED THE AUTHORS AND OWNERS OF THEIR RESPECTIVE INSTRUMENTS OF SERVICE AND SHALL RETAIN ALL COMMON LAW, STATUTORY AND OTHER RESERVED RIGHTS, INCLUDING COPYRIGHTS. THE INSTRUMENTS OF SERVICE SHALL NOT BE USED BY THE OWNER FOR FUTURE ADDITIONS OR ALTERATIONS TO THIS PROJECT OR FOR OTHER PROJECTS, WITHOUT THE PRIOR WRITTEN AGREEMENT OF THE DP. ANY UNAUTHORIZED USE OF THE INSTRUMENTS OF SERVICE SHALL BE AT THE OWNER'S SOLE RISK AND WITHOUT LIABILITY TO THE DP AND THE DP'S CONSULTANTS.

4 STEL ENGINEERING
26030 ACERO
MISSION VIEJO, CA 92691
949.305.1150 | FAX 949.305.1420

M BAR C CONSTRUCTION INC.
1770 LA COSTA MEADOWS DRIVE SAN MARCOS, CA 92078 ERIK KRIVOKOPICH
PHONE: (760) 744-4131 FAX: (760) 744-4449 ERIK@MBARCONLINE.COM
LIC # 869960 B AND C51 (775) 787-8845

ENGINEER'S APPROVAL
REGISTERED PROFESSIONAL ENGINEER DUSTIN K. ROSEPINK S 5885 STRUCTURAL STATE OF CALIFORNIA

BID INFORMATION
THE STRUCTURES AND DESIGNS IN THIS PC ARE PROPRIETARY TO M BAR C CONSTRUCTION, INC. AND 4 S.T.E.L. ENGINEERING, INC. ALL SITES USING THIS PC: M BAR C CONSTRUCTION, INC. SHALL BE THE STEEL CONTRACTOR & 4 S.T.E.L. ENGINEERING, INC. SHALL BE THE SEOR. SEE THE STANDARD NOTES FOR PC USE ON S-1 FOR ADDITIONAL REQUIREMENTS.

PRE-CHECK (PC) DOCUMENT
CODE: 2022 CBC
A SEPARATE PROJECT APPLICATION FOR CONSTRUCTION IS REQUIRED

APPROVED
DIV. OF THE STATE ARCHITECT
APP: 04-123080 PC
REVIEWED FOR
SS ☑ FLS ☑ ACS ☑ CG ☐
DATE: 11/25/2024

SITE SPECIFIC INFORMATION
VISALIA CAMPUS UNIV. CENTER
COLLEGE OF THE SEQUOIAS
915 S. MOONEY BLVD,
VISALIA, CA 93277

REVISIONS		
MARK	DATE	DESCRIPTION

UG 22.1.1

4 STEL JOB #	MC02-V3-1-1
DATE	11-18-24
DRAWN BY	GM
CHECKED	RWS

PURLIN SCHEDULE

S-16

NOTE: IF DWG. IS NOT 24 x 36, IT IS NOT FULL SIZE

IDENTIFICATION STAMP
DIV. OF THE STATE ARCHITECT
APP: 02-122821 INC: 2
REVIEWED FOR
SS ☑ FLS ☑ ACS ☑
DATE: 11/20/2025

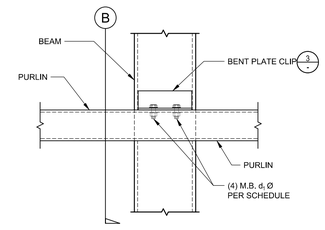

A PLAN

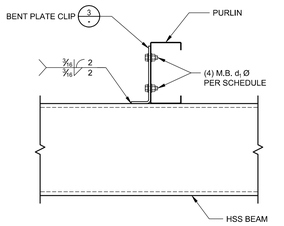

NOTES:
BOLT DIAMETER d_1 PER SCHEDULE '1/S-16'

B SECTION

12 - PURLIN TO BEAM
1-1/2"=1'-0"

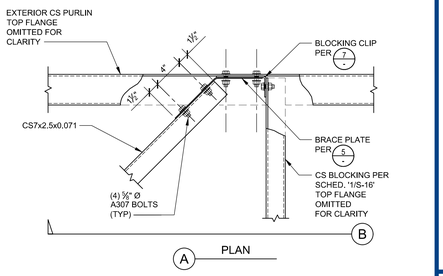

A PLAN

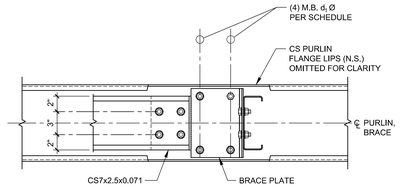

B ELEVATION

10 - TYP. PURLIN BRACE AT EXTERIOR PURLIN
1-1/2"=1'-0"

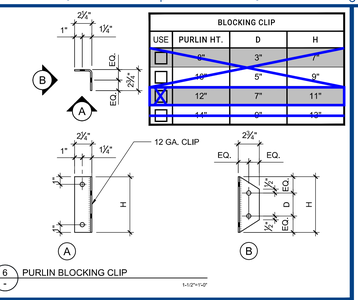

6 - PURLIN BLOCKING CLIP
1-1/2"=1'-0"

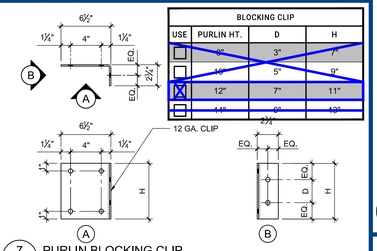

7 - PURLIN BLOCKING CLIP
1-1/2"=1'-0"

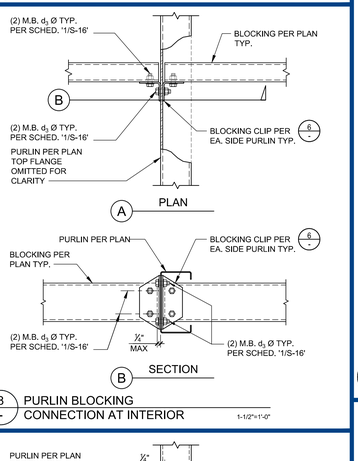

8 - PURLIN BLOCKING CONNECTION AT INTERIOR
1-1/2"=1'-0"

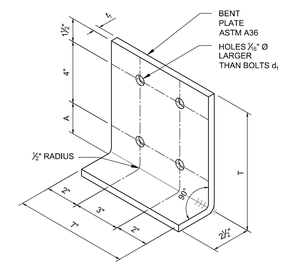

BENT PLATE CLIP			
USE	PURLIN HT.	T	A
☐	8"	7 ½"	2"
☐	10"	8 ½"	3"
☒	12"	9 ½"	4"
☐	14"	10 ½"	5"

NOTES:
1. CLIP PLATE THICKNESS 't_1' PER PURLIN SCHEDULE '1/S-16'.

3 - PURLIN BEAM CLIP
3"=1'-0"

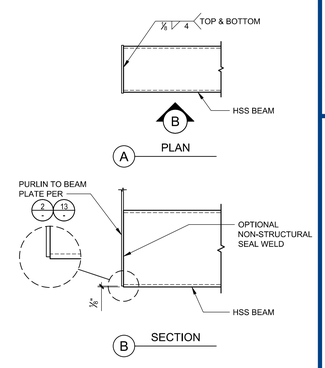

A PLAN

B SECTION

4 - BEAM END PLATE
1-1/2"=1'-0"

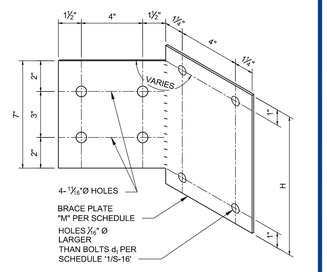

PURLIN BRACE PLATE		
USE	MAX. COLUMN SPACING "S" FROM 1/S-16	MATERIAL "M"
☒	"S" <= 28'-6"	12 GA 55 KSI
☐	"S" = 32'-6"	10 GA 55 KSI
☐	"S" = 35'-9"	10 GA 55 KSI

PURLIN BRACE PLATE		
USE	PURLIN HT.	H
☐	8"	7"
☐	10"	9"
☒	12"	11"
☐	14"	13"

5 - PURLIN BRACE PLATE
3"=1'-0"

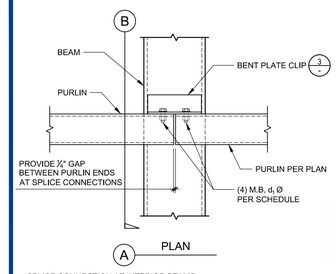

SPLICE CONNECTION AT INTERIOR BEAMS.
EXTERIOR BEAMS USE FULL LENGTH
PURLIN WITH CANTILEVER. SEE DETAIL 12 -

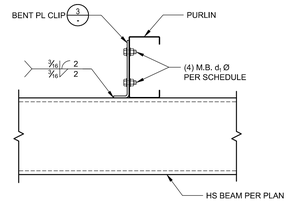

B SECTION

NOTES:
1. BOLT DIAMETER d_1 PER SCHEDULE '1/S-16'

1 - PURLIN TO BEAM AT SPLICE
1-1/2"=1'-0"

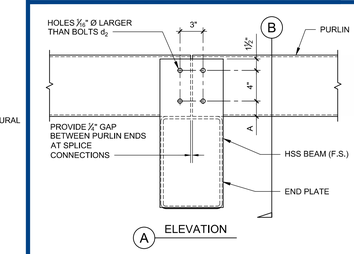

SPLICE CONNECTION AT INTERIOR BEAMS.
EXTERIOR BEAMS USE FULL LENGTH
PURLIN WITH CANTILEVER. SEE DETAIL 13 -

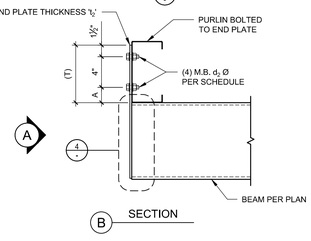

END PLATE TO BE ½" WIDER THAN BEAM.

END PLATE			
USE	PURLIN HT.	T	A
☐	8"	7 ½"	2"
☐	10"	8 ½"	3"
☒	12"	9 ½"	4"
☐	14"	10 ½"	5"

NOTES:
1. END PLATE THICKNESS 't_2' PER PURLIN SCHEDULE '1/S-16'.
2. BOLT DIAMETER d_2 PER SCHEDULE 1/S-16

2 - PURLIN TO BEAM END PLATE AT SPLICE
1-1/2"=1'-0"

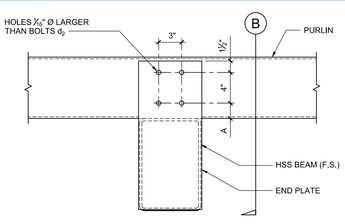

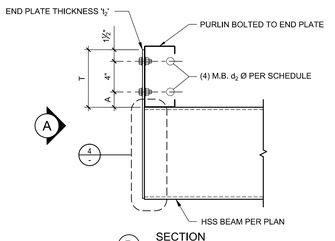

END PLATE TO BE ½" WIDER THAN BEAM.

END PLATE			
USE	PURLIN HT.	T	A
☐	8"	7 ½"	2"
☐	10"	8 ½"	3"
☒	12"	9 ½"	4"
☐	14"	10 ½"	5"

NOTES:
1. END PLATE THICKNESS 't_2' PER PURLIN SCHEDULE '1/S-16'.
2. BOLT DIAMETER d_2 PER SCHEDULE 1/S-16

13 - PURLIN TO BEAM END PLATE
1-1/2"=1'-0"

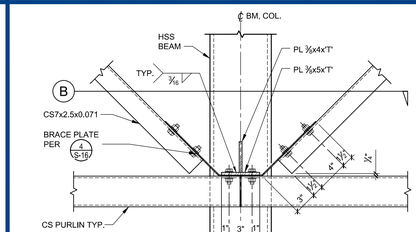

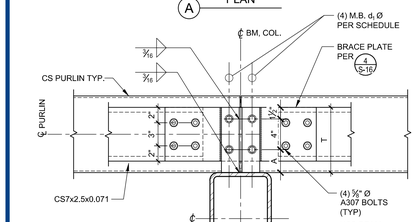

T PLATE			
USE	PURLIN HT.	T	A
☐	8"	7 ½"	2"
☐	10"	8 ½"	3"
☒	12"	9 ½"	4"
☐	14"	10 ½"	5"

11 - TYP. PURLIN BRACE TO HSS BEAM
1-1/2"=1'-0"

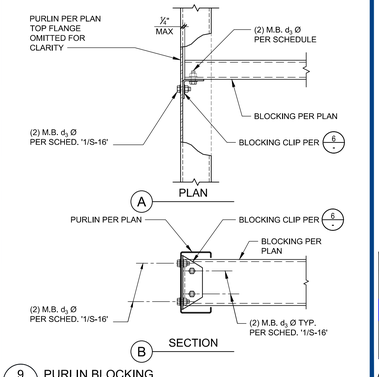

9 - PURLIN BLOCKING CONNECTION AT EXTERIOR
1-1/2"=1'-0"

4 STEEL ENGINEERING
26030 ACERO
MISSION VIEJO, CA 92691
949.305.1150 | FAX 949.305.1420

M BAR C CONSTRUCTION INC.
1778 LA COSTA MEADOWS DRIVE
SAN MARCOS, CA 92078
ERIK KRYCKOPICH
PHONE: (760) 744-4131
FAX: (760) 746-4497
ERIK@MBARCONLINE.COM
LIC # 847642
B, ASC-121
(770) 787-8645

ENGINEER'S APPROVAL



BID INFORMATION
THE STRUCTURES AND DESIGNS IN THIS PC ARE PROPRIETARY TO M BAR C CONSTRUCTION, INC. AND 4 S.T.E.L. ENGINEERING, INC. ALL SITES USING THIS PC: M BAR C CONSTRUCTION, INC. SHALL BE THE STEEL CONTRACTOR & 4 S.T.E.L. ENGINEERING, INC. SHALL BE THE SEOR. SEE THE STANDARD NOTES FOR PC USE ON S-1 FOR ADDITIONAL REQUIREMENTS.

PRE-CHECK (PC) DOCUMENT
CODE: 2022 CBC
A SEPARATE PROJECT APPLICATION FOR CONSTRUCTION IS REQUIRED

APPROVED
DIV. OF THE STATE ARCHITECT
APP: 04-123080 PC
REVIEWED FOR
SS ☑ FLS ☑ ACS ☑ CG ☐
DATE: 11/25/2024

SITE SPECIFIC INFORMATION
VISALIA CAMPUS UNIV. CENTER
COLLEGE OF THE SEQUOIAS
915 S. MOONEY BLVD.
VISALIA, CA 93277

REVISIONS

MARK	DATE	DESCRIPTION

UG 22.1.1

4 STEL JOB #	MC02-V3-1-1
DATE	11-18-24
DRAWN BY	GM
CHECKED	RWS

TYPICAL
PURLIN DETAILS

S-17

DRAWINGS, SPECIFICATIONS AND OTHER DOCUMENTS, PREPARED BY THE DESIGN PROFESSIONAL (DP) AND THE DP'S CONSULTANTS ARE INSTRUMENTS OF SERVICE FOR USE SOLELY WITH RESPECT TO THIS PROJECT. THIS INCLUDES DOCUMENTS IN ELECTRONIC FORM. THE DP AND THE DP'S CONSULTANTS SHALL BE DEEMED THE AUTHORS AND OWNERS OF THEIR RESPECTIVE INSTRUMENTS OF SERVICE AND SHALL RETAIN ALL COMMON LAW, STATUTORY AND OTHER RESERVED RIGHTS, INCLUDING COPYRIGHTS. THE INSTRUMENTS OF SERVICE SHALL NOT BE USED BY THE OWNER FOR FUTURE ADDITIONS OR ALTERATIONS TO THIS PROJECT OR FOR OTHER PROJECTS, WITHOUT THE PRIOR WRITTEN AGREEMENT OF THE DP. ANY UNAUTHORIZED USE OF THE INSTRUMENTS OF SERVICE SHALL BE AT THE OWNER'S SOLE RISK AND WITHOUT LIABILITY TO THE DP AND THE DP'S CONSULTANTS.

NOTE: IF DWG. IS NOT 24 x 36, IT IS NOT FULL SIZE

IDENTIFICATION STAMP
DIV. OF THE STATE ARCHITECT
APP: 02-122821 INC: 2
REVIEWED FOR
SS ☑ FLS ☑ ACS ☑
DATE: 11/20/2025

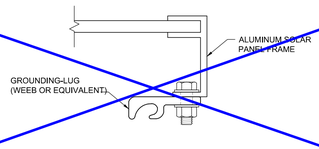

☐ OPTION UTILIZED
9 - OPTIONAL GROUNDING LUG
1'-0" = 1'-0"

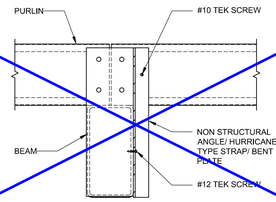

☐ OPTION UTILIZED
10 - PURLIN GROUNDING DETAIL
1-1/2" = 1'-0"

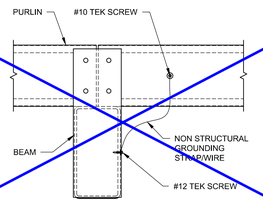

☐ OPTION UTILIZED
11 - PURLIN GROUNDING DETAIL
1-1/2" = 1'-0"

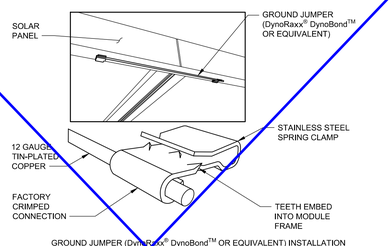

GROUND JUMPER (DynoRaxx® DynoBond™ OR EQUIVALENT) INSTALLATION

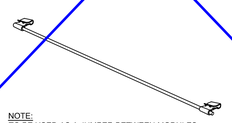

NOTE:
TO BE USED AS A JUMPER BETWEEN MODULES AND ROWS WHICH MAKES THE MODULE FRAME THE MEDIUM FOR THE EQUIPMENT GROUND PATH.

GROUND JUMPER (DynoRaxx® DynoBond™ OR EQUIVALENT)

☐ OPTION UTILIZED
12 - OPTIONAL GROUND JUMPER
N.T.S.

12 GA PURLIN

☐ OPTION UTILIZED

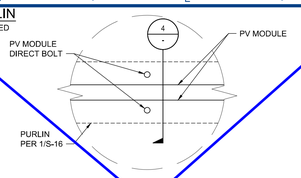

14 GA PURLIN W/ BACK PLT

☐ OPTION UTILIZED

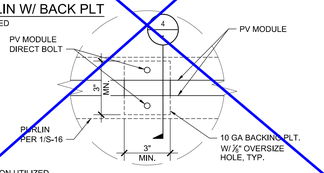

☐ OPTION UTILIZED
14 - LANDSCAPE CONNECTION DETAILS
3" = 1'-0"

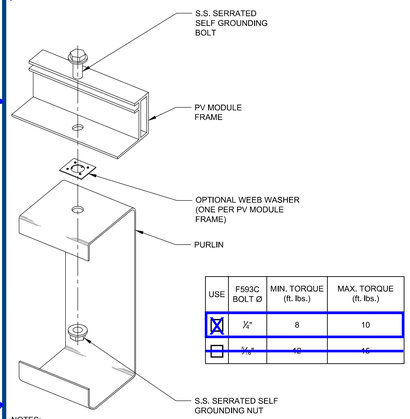

USE	F593C BOLT ⌀	MIN. TORQUE (ft. lbs.)	MAX. TORQUE (ft. lbs.)
☒	½"	8	10
☐	⅝"	12	15

NOTES:
1. REFER TO 'PV PANEL AND PV PANEL FASTENER INSTALLATION PROCEDURE' NOTES ON SHEET S-3.
2. BOLT SIZE SHALL BE SELECTED FROM THE SOLAR PANEL MANUFACTURER'S DOCUMENTATION SUBMITTED TO DSA AT PLAN REVIEW.

☒ OPTION UTILIZED
7 - SELF GROUNDING BOLT
6"=1'-0"

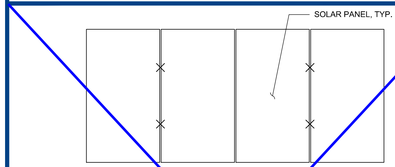

EVEN NUMBER OF MODULES IN ROW

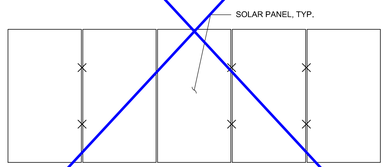

ODD NUMBER OF MODULES IN ROW

NOTE:
✕ DENOTES WEEB-KSR OR CCR LOCATION

☐ OPTION UTILIZED
8 - OPTIONAL WEEB-KSR OR CCR LAYOUT
3/8" = 1'-0"

42 GA PURLIN

☐ OPTION UTILIZED

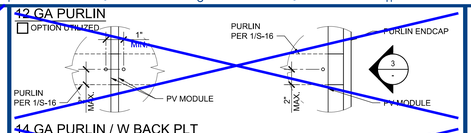

44 GA PURLIN / W BACK PLT

☐ OPTION UTILIZED

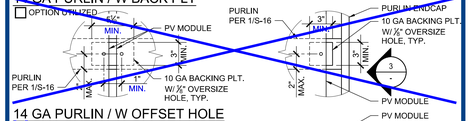

14 GA PURLIN / W OFFSET HOLE

☒ OPTION UTILIZED

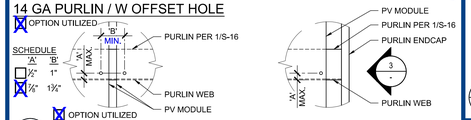

☒ OPTION UTILIZED
13 - PORTRAIT CONNECTION DETAILS
1 1/2" = 1'-0"

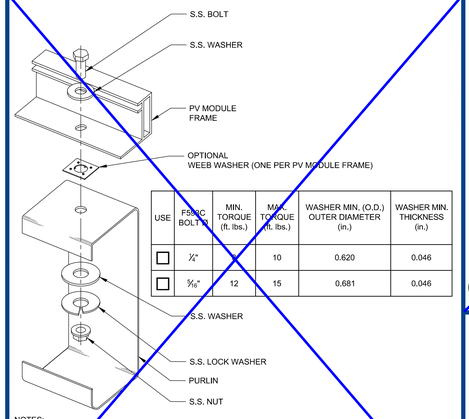

USE	F593C BOLT ⌀	MIN. TORQUE (ft. lbs.)	MAX. TORQUE (ft. lbs.)	WASHER MIN. (O.D.) OUTER DIAMETER (in.)	WASHER MIN. THICKNESS (in.)
☐	½"		10	0.620	0.046
☐	⅝"	12	15	0.681	0.046

NOTES:
1. REFER TO 'PV PANEL AND PV PANEL FASTENER INSTALLATION PROCEDURE' NOTES ON SHEET S-3.
2. BOLT SIZE SHALL BE SELECTED FROM THE SOLAR PANEL MANUFACTURER'S DOCUMENTATION SUBMITTED TO DSA AT PLAN REVIEW.

☐ OPTION UTILIZED
5 - SOLAR PANEL DIRECT BOLT ASSEMBLY
6"=1'-0"

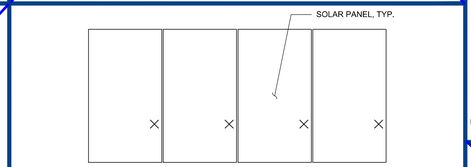

EVEN NUMBER OF MODULES IN ROW

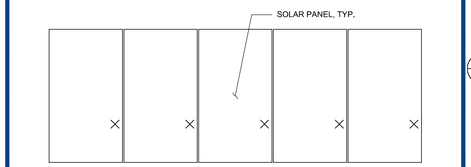

ODD NUMBER OF MODULES IN ROW

NOTE:
✕ DENOTES WEEB-ADC LOCATION

☒ OPTION UTILIZED
6 - OPTIONAL WEEB-ADC LAYOUT
3/8" = 1'-0"

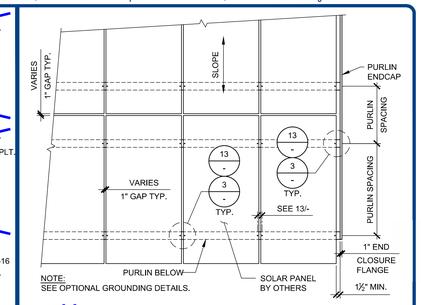

NOTE:
SEE OPTIONAL GROUNDING DETAILS.

☒ OPTION UTILIZED
1 - PORTRAIT SOLAR PANEL LAYOUT
3/8" = 1'-0"

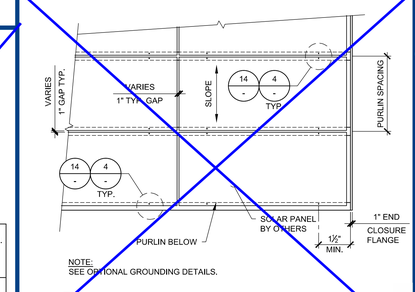

NOTE:
SEE OPTIONAL GROUNDING DETAILS.

☐ OPTION UTILIZED
2 - LANDSCAPE SOLAR PANEL LAYOUT
3/8" = 1'-0"

NOTES:
1. HOLES IN PURLIN SHALL BE ⅛"Ø LARGER THAN BOLTS UTILIZED.
2. FASTENERS SHALL BE TORQUED PER 5/- OR 7/-.
3. BOLT STACK SHALL BE INSTALLED PER 5/- OR 7/-.
4. BOLT SIZE SHALL BE SELECTED FROM THE SOLAR PANEL MANUFACTURER'S DOCUMENTATION SUBMITTED TO DSA AT PLAN REVIEW.

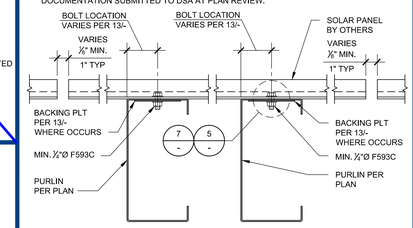

☒ OPTION UTILIZED
3 - PORTRAIT DIRECT BOLT
3" = 1'-0"

NOTES:
1. HOLES IN PURLIN SHALL BE ⅛"Ø LARGER THAN BOLTS UTILIZED.
2. FASTENERS SHALL BE TORQUED PER 5/- OR 7/-.
3. BOLT STACK SHALL BE INSTALLED PER 5/- OR 7/-.
4. BOLT SIZE SHALL BE SELECTED FROM THE SOLAR PANEL MANUFACTURER'S DOCUMENTATION SUBMITTED TO DSA AT PLAN REVIEW.

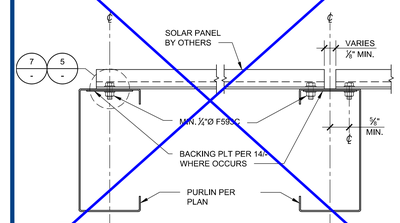

☐ OPTION UTILIZED
4 - LANDSCAPE DIRECT BOLT
3" = 1'-0"

DRAWINGS, SPECIFICATIONS AND OTHER DOCUMENTS, PREPARED BY THE DESIGN PROFESSIONAL (DP) AND THE DP'S CONSULTANTS ARE INSTRUMENTS OF SERVICE FOR USE SOLELY WITH RESPECT TO THIS PROJECT. THIS INCLUDES DOCUMENTS IN ELECTRONIC FORM. THE DP AND THE DP'S CONSULTANTS SHALL BE DEEMED THE AUTHORS AND OWNERS OF THEIR RESPECTIVE INSTRUMENTS OF SERVICE AND SHALL RETAIN ALL COMMON LAW, STATUTORY AND OTHER RESERVED RIGHTS, INCLUDING COPYRIGHTS. THE INSTRUMENTS OF SERVICE SHALL NOT BE USED BY THE OWNER FOR FUTURE ADDITIONS OR ALTERATIONS TO THIS PROJECT OR FOR OTHER PROJECTS, WITHOUT THE PRIOR WRITTEN AGREEMENT OF THE DP. ANY UNAUTHORIZED USE OF THE INSTRUMENTS OF SERVICE SHALL BE AT THE OWNER'S SOLE RISK AND WITHOUT LIABILITY TO THE DP AND THE DP'S CONSULTANTS.

4 STEEL ENGINEERING
26030 ACERO
MISSION VIEJO, CA 92691
949.305.1150 | FAX 949.305.1420

M BAR C CONSTRUCTION INC.
1778 LA COSTA MEADOWS DRIVE, SAN MARCOS, CA 92078
EMAIL KEVIN@OKOPICH
PHONE: (760) 744-4131
FAX: (760) 746-4405
MBARC@ATCGLOBAL.COM
LIC # 847642
B, ROC-121
(775) 787-8645

ENGINEER'S APPROVAL



BID INFORMATION
THE STRUCTURES AND DESIGNS IN THIS PC ARE PROPRIETARY TO M BAR C CONSTRUCTION, INC. AND 4 S.T.E.L. ENGINEERING, INC. ALL SITES USING THIS PC: M BAR C CONSTRUCTION, INC. SHALL BE THE STEEL CONTRACTOR & 4 S.T.E.L. ENGINEERING, INC. SHALL BE THE SEOR. SEE THE STANDARD NOTES FOR PC USE ON S-1 FOR ADDITIONAL REQUIREMENTS.

PRE-CHECK (PC) DOCUMENT
CODE: 2022 CBC
A SEPARATE PROJECT APPLICATION FOR CONSTRUCTION IS REQUIRED

APPROVED
DIV. OF THE STATE ARCHITECT
APP: 04-123080 PC
REVIEWED FOR
SS ☑ FLS ☑ ACS ☑ CG ☐
DATE: 11/25/2024

SITE SPECIFIC INFORMATION
VISALIA CAMPUS UNIV. CENTER
COLLEGE OF THE SEQUOIAS
915 S. MOONEY BLVD.
VISALIA, CA 93277

REVISIONS

MARK	DATE	DESCRIPTION

UG 22.1.1

4 STEL JOB #	MC02-V3-1-1
DATE	11-18-24
DRAWN BY	GM
CHECKED	RWS

TYPICAL SOLAR PANEL DETAILS

S-18

NOTE: IF DWG. IS NOT 24 x 36, IT IS NOT FULL SIZE

IDENTIFICATION STAMP
DIV. OF THE STATE ARCHITECT
APP: 02-122821 INC: 2
REVIEWED FOR
SS ☑ FLS ☑ ACS ☑
DATE: 11/20/2025

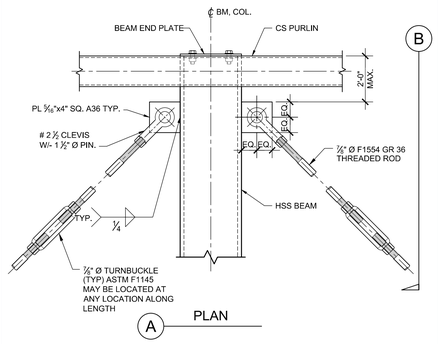

A PLAN

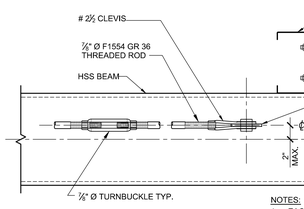

B ELEVATION

NOTES:
1. EACH ROD REQUIRES 1 TURNBUCKLE MINIMUM HOWEVER MORE THAN 1 MAY BE USED.
2. THREADED ROD SAG:
   - MIN. DEFLECTION ¼"
   - MAX. DEFLECTION ¾"
3. THREADED ROD CAN BE LOCATED 2" MAX. ABOVE OR BELOW CENTER OF BEAM.

11 - TYP OT BEAM BRACE AT BEAM END
1-1/2"=1'-0"

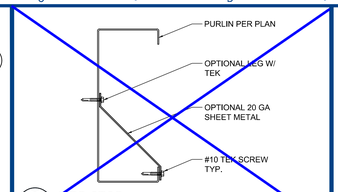

8 - BIRD STOP
3"=1'-0"

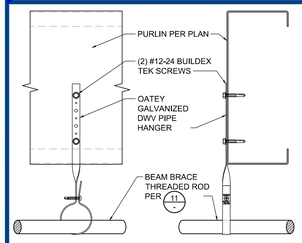

8A - BEAM BRACE ROD SUPPORT
3"=1'-0"

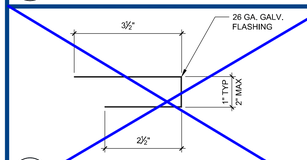

9 - DECK FLASHING
6"=1'-0"

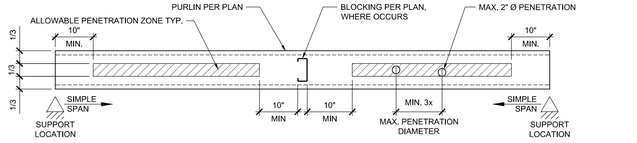

SIMPLE SUPPORT SPAN

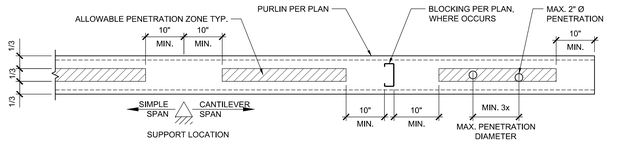

CANTILEVER SPAN

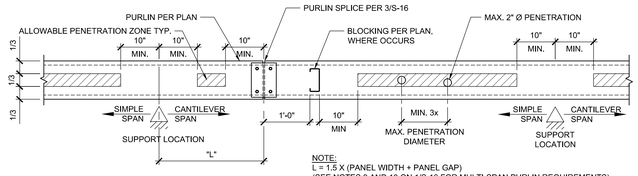

NOTE:
L = 1.5 X (PANEL WIDTH + PANEL GAP)
(SEE NOTES 9 AND 10 ON 1/S-16 FOR MULTI-SPAN PURLIN REQUIREMENTS)

MULTI SUPPORT SPAN

NOTE:
IF MORE THAN 5 PENETRATIONS PER SPAN ARE NEEDED, CONTRACTOR TO SUBMIT AN RFI TO DESIGN PROFESSIONAL IN GENERAL RESPONSIBLE CHARGE TO ENSURE REQUIREMENTS OF THIS DETAIL ARE MET AND TO JUSTIFY THE QUANTITY OF PENETRATIONS NEEDED.

4 - ALLOWABLE PURLIN PENETRATIONS
3/4"=1'-0"

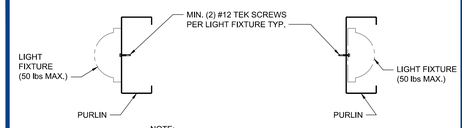

NOTE:
ALL STRUCTURAL CONNECTION POINTS REQUIRED BY MANUFACTURER TO MAINTAIN WARRANTY TO BE FILLED. THIS MAY EXCEED THE MINIMUM NUMBER OF SCREWS.

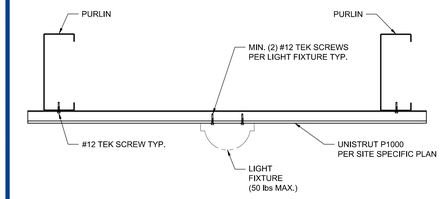

1 - LIGHT INSTALLATION OPTIONS
1-1/2"=1'-0"

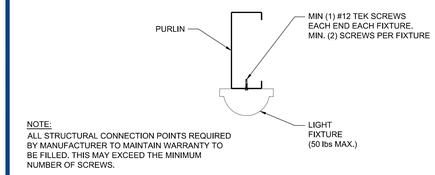

NOTE:
ALL STRUCTURAL CONNECTION POINTS REQUIRED BY MANUFACTURER TO MAINTAIN WARRANTY TO BE FILLED. THIS MAY EXCEED THE MINIMUM NUMBER OF SCREWS.

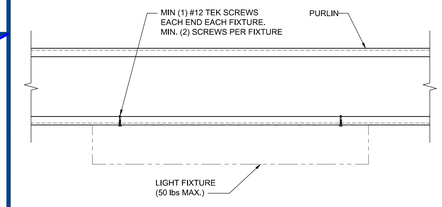

2 - ALTERNATE LIGHT INSTALLATION OPTIONS
1-1/2"=1'-0"

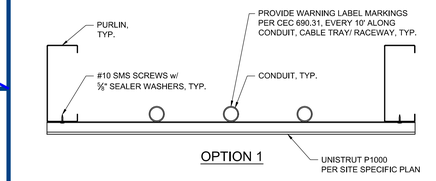

OPTION 1



OPTION 2 OPTION 3

3 - CONDUIT SUPPORT/ LOCATION OPTIONS
1-1/2"=1'-0"

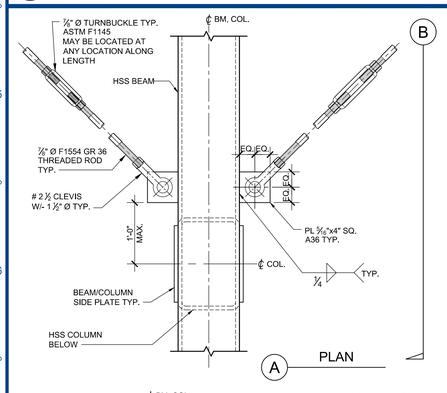

A PLAN

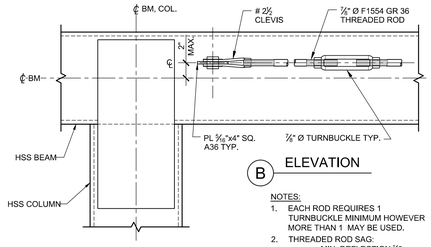

B ELEVATION

NOTES:
1. EACH ROD REQUIRES 1 TURNBUCKLE MINIMUM HOWEVER MORE THAN 1 MAY BE USED.
2. THREADED ROD SAG:
   - MIN. DEFLECTION ¼"
   - MAX. DEFLECTION ¾"
3. THREADED ROD CAN BE LOCATED 2" MAX. ABOVE OR BELOW CENTER OF BEAM.

12 - TYP OT BEAM BRACE AT COLUMN
1-1/2"=1'-0"

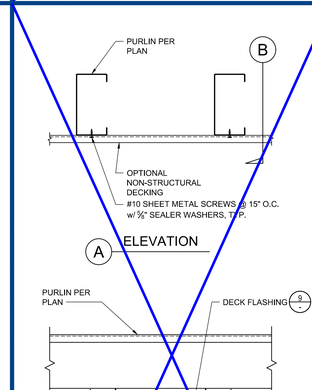

A ELEVATION

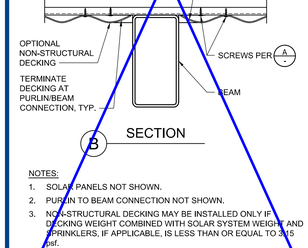

B SECTION

NOTES:
1. SOLAR PANELS NOT SHOWN.
2. PURLIN TO BEAM CONNECTION NOT SHOWN.
3. NON-STRUCTURAL DECKING MAY BE INSTALLED ONLY IF DECKING WEIGHT COMBINED WITH SOLAR SYSTEM WEIGHT AND SPRINKLERS, IF APPLICABLE, IS LESS THAN OR EQUAL TO 3.5 psf.

10 - OPTIONAL DECKING
1-1/2"=1'-0"

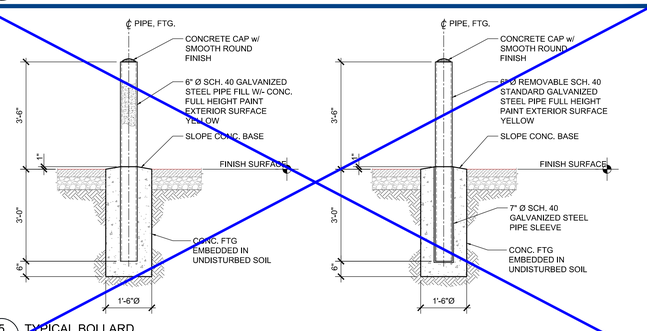

5 - TYPICAL BOLLARD
1/2"=1'-0"

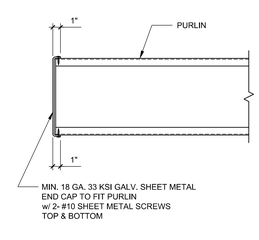

7 - PURLIN END CAP
1-1/2"=1'-0"

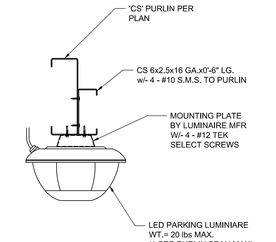

6 - ALTERNATIVE LIGHT INSTALLATION DETAIL
1-1/2"=1'-0"

4 STEL ENGINEERING
26030 ACERO
MISSION VIEJO, CA 92691
949.305.1150 | FAX 949.305.1420

M BAR C CONSTRUCTION INC.
1709 LA COSTA MEADOWS DRIVE
SAN MARCOS, CA 92078
ERIC KRVOKOPICH
PHONE: (760) 744-4131
FAX: (760) 746-4497
ERIK@MBARCONLINE.COM
LIC # B/ProG
B 2021-121
(770) 787-8445

ENGINEER'S APPROVAL



BID INFORMATION
THE STRUCTURES AND DESIGNS IN THIS PC ARE PROPRIETARY TO M BAR C CONSTRUCTION, INC. AND 4 S.T.E.L. ENGINEERING, INC. ALL SITES USING THIS PC: M BAR C CONSTRUCTION, INC. SHALL BE THE STEEL CONTRACTOR & 4 S.T.E.L. ENGINEERING, INC. SHALL BE THE SEOR. SEE THE STANDARD NOTES FOR PC USE ON S-1 FOR ADDITIONAL REQUIREMENTS.

PRE-CHECK (PC) DOCUMENT
CODE: 2022 CBC
A SEPARATE PROJECT APPLICATION FOR CONSTRUCTION IS REQUIRED

APPROVED
DIV. OF THE STATE ARCHITECT
APP: 04-123080 PC
REVIEWED FOR
SS ☑ FLS ☑ ACS ☑ CG ☐
DATE: 11/25/2024

SITE SPECIFIC INFORMATION
VISALIA CAMPUS UNIV. CENTER
COLLEGE OF THE SEQUOIAS
915 S. MOONEY BLVD,
VISALIA, CA 93277

REVISIONS

MARK	DATE	DESCRIPTION

UG 22.1.1

4 STEL JOB #	MC02-V3-1-1
DATE	11-18-24
DRAWN BY	GM
CHECKED	RWS

BEAM BRACING & MISC. DETAILS

S-19

DRAWINGS, SPECIFICATIONS AND OTHER DOCUMENTS, PREPARED BY THE DESIGN PROFESSIONAL (DP) AND THE DP'S CONSULTANTS ARE INSTRUMENTS OF SERVICE FOR USE SOLELY WITH RESPECT TO THIS PROJECT. THIS INCLUDES DOCUMENTS IN ELECTRONIC FORM. THE DP AND THE DP'S CONSULTANTS SHALL BE DEEMED THE AUTHORS AND OWNERS OF THEIR RESPECTIVE INSTRUMENTS OF SERVICE AND SHALL RETAIN ALL COMMON LAW, STATUTORY AND OTHER RESERVED RIGHTS, INCLUDING COPYRIGHTS. THE INSTRUMENTS OF SERVICE SHALL NOT BE USED BY THE OWNER FOR FUTURE ADDITIONS OR ALTERATIONS TO THIS PROJECT OR FOR OTHER PROJECTS, WITHOUT THE PRIOR WRITTEN AGREEMENT OF THE DP. ANY UNAUTHORIZED USE OF THE INSTRUMENTS OF SERVICE SHALL BE AT THE OWNER'S SOLE RISK AND WITHOUT LIABILITY TO THE DP AND THE DP'S CONSULTANTS.

NOTE: IF DWG, IS NOT 24 x 36, IT IS NOT FULL SIZE

IDENTIFICATION STAMP
DIV. OF THE STATE ARCHITECT
APP: 02-122821 INC: 2
REVIEWED FOR
SS ☑ FLS ☑ ACS ☑
DATE: 11/20/2025

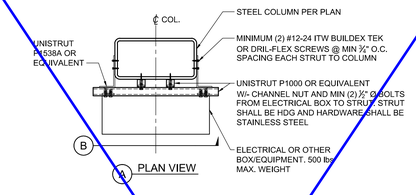

☐ OPTION UTILIZED

4 — COLUMN MOUNTED EQUIPMENT ANCHORAGE DETAIL

1"=1'-0"

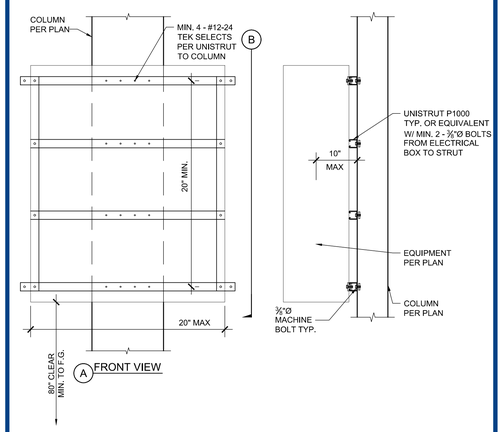

NOTES:
1. 500 lb MAX EQUIPMENT WEIGHT
2. FOR COLUMN THICKER ½" PRE DRILL COLUMN WITH DRILL BIT EQUAL TO ROOT DIAMETER OF SCREW USED. (I.E. SHAFT EXCLUDING THREADS)

☒ OPTION UTILIZED

5 — EQUIPMENT TO COLUMN CONNECTION

1"=1'-0"

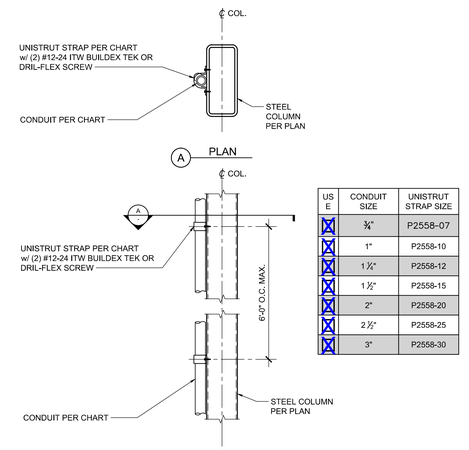

USE	CONDUIT SIZE	UNISTRUT STRAP SIZE
☒	⅜"	P2558-07
☒	1"	P2558-10
☒	1 ¼"	P2558-12
☒	1 ½"	P2558-15
☒	2"	P2558-20
☒	2 ½"	P2558-25
☒	3"	P2558-30

NOTE:
1. FOR COLUMN THICKER ½" PRE DRILL COLUMN WITH DRILL BIT EQUAL TO ROOT DIAMETER OF SCREW USED. (I.E. SHAFT EXCLUDING THREADS)
2. PIPE CONDUIT MAY BE MOUNTED TO BOTH SIDES OF COLUMN. NOT SHOWN IN DETAIL FOR CLARITY.

☒ OPTION UTILIZED

3 — PIPE/ CONDUIT MOUNTING

1"=1'-0"

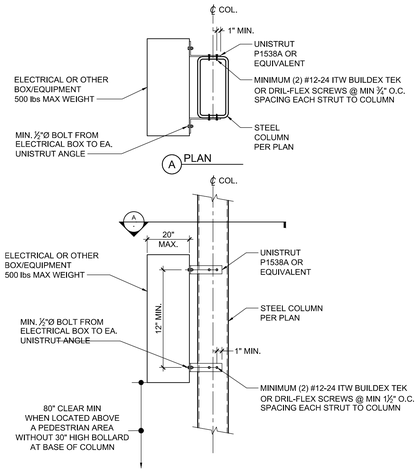

NOTE:
1. FOR COLUMN THICKER ½" PRE DRILL COLUMN WITH DRILL BIT EQUAL TO ROOT DIAMETER OF SCREW USED. (I.E. SHAFT EXCLUDING THREADS)
2. EQUIPMENT MAY BE MOUNTED TO BOTH SIDES OF COLUMN. NOT SHOWN IN DETAIL FOR CLARITY.

☒ OPTION UTILIZED

1 — ALTERNATE EQUIPMENT ATTACHMENT DETAIL

1" = 1'-0"

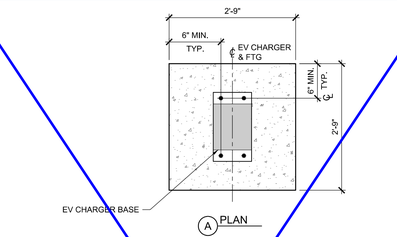

8 — EV CHARGER FOUNDATION

3/4"=1'-0"

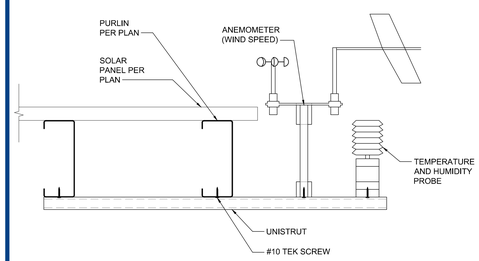

6 — WEATHER STATION ATTACHMENT DETAIL

N.T.S.

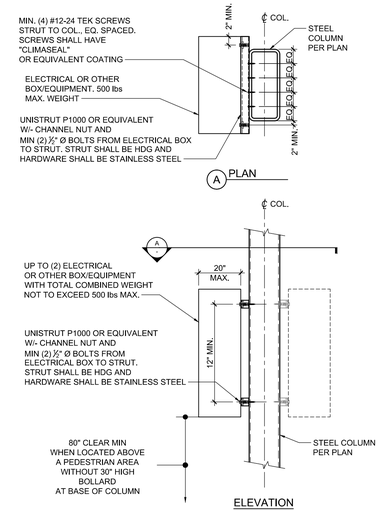

NOTE:
1. FOR COLUMN THICKER ½" PRE DRILL COLUMN WITH DRILL BIT EQUAL TO ROOT DIAMETER OF SCREW USED. (I.E. SHAFT EXCLUDING THREADS)
2. EQUIPMENT MAY BE MOUNTED TO BOTH SIDES OF COLUMN. NOT SHOWN FOR CLARITY.

☒ OPTION UTILIZED

4 — TYP. ELECTRICAL EQUIPMENT TO COLUMN

1"=1'-0"

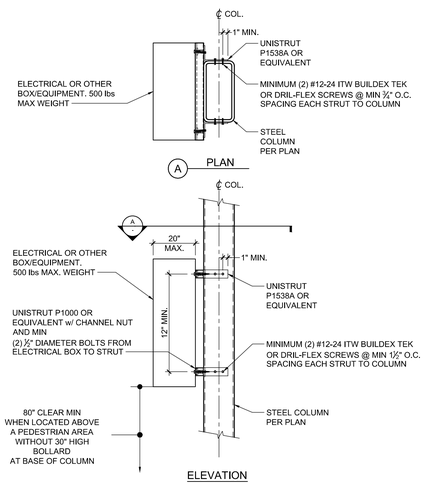

NOTE:
1. FOR COLUMN THICKER ½" PRE DRILL COLUMN WITH DRILL BIT EQUAL TO ROOT DIAMETER OF SCREW USED. (I.E. SHAFT EXCLUDING THREADS).
2. EQUIPMENT MAY BE MOUNTED TO BOTH SIDES OF COLUMN, NOT SHOWN FOR CLARITY

☒ OPTION UTILIZED

2 — ALTERNATE EQUIPMENT ATTACHMENT DETAIL

1" = 1'-0"

4 STEEL ENGINEERING
26030 ACERO
MISSION VIEJO, CA 92691
949.305.1150 | FAX 949.305.1420

M BAR C CONSTRUCTION INC.
1778 LA COSTA MEADOWS DRIVE
SAN MARCOS, CA 92078
ERIK KRYCHOPICH
PHONE: (760) 744-4131
FAX: (760) 746-4457
ERIK@MBARCONLINE.COM
LIC # 847942
B, ASC-C21
(770) 787-8445

ENGINEER'S APPROVAL

REGISTERED PROFESSIONAL ENGINEER
DUSTIN K. REBERG
S 5885
CIVIL
STATE OF CALIFORNIA

BID INFORMATION

THE STRUCTURES AND DESIGNS IN THIS PC ARE PROPRIETARY TO M BAR C CONSTRUCTION, INC. AND 4 S.T.E.L. ENGINEERING, INC. ALL SITES USING THIS PC: M BAR C CONSTRUCTION, INC. SHALL BE THE STEEL CONTRACTOR & 4 S.T.E.L. ENGINEERING, INC. SHALL BE THE SEOR. SEE THE STANDARD NOTES FOR PC USE ON S-1 FOR ADDITIONAL REQUIREMENTS.

PRE-CHECK (PC) DOCUMENT

CODE: 2022 CBC

A SEPARATE PROJECT APPLICATION FOR CONSTRUCTION IS REQUIRED

APPROVED
DIV. OF THE STATE ARCHITECT
APP: 04-123080 PC
REVIEWED FOR
SS ☑ FLS ☑ ACS ☒ CG ☐
DATE: 11/25/2024

SITE SPECIFIC INFORMATION

VISALIA CAMPUS UNIV. CENTER
COLLEGE OF THE SEQUOIAS
915 S. MOONEY BLVD.
VISALIA, CA 93277

REVISIONS

MARK	DATE	DESCRIPTION

UG 22.1.1

4 STEL JOB #	MC02-V3-1-1
DATE	11-18-24
DRAWN BY	GM
CHECKED	RWS

EQUIPMENT COLUMN CONNECTIONS

S-20

NOTE: IF DWG. IS NOT 24 x 36, IT IS NOT FULL SIZE

DRAWINGS, SPECIFICATIONS AND OTHER DOCUMENTS, PREPARED BY THE DESIGN PROFESSIONAL (DP) AND THE DP'S CONSULTANTS ARE INSTRUMENTS OF SERVICE FOR USE SOLELY WITH RESPECT TO THIS PROJECT. THIS INCLUDES DOCUMENTS IN ELECTRONIC FORM. THE DP AND THE DP'S CONSULTANTS SHALL BE DEEMED THE AUTHORS AND OWNERS OF THEIR RESPECTIVE INSTRUMENTS OF SERVICE AND SHALL RETAIN ALL COMMON LAW, STATUTORY AND OTHER RESERVED RIGHTS, INCLUDING COPYRIGHTS. THE INSTRUMENTS OF SERVICE SHALL NOT BE USED BY THE OWNER FOR FUTURE ADDITIONS OR ALTERATIONS TO THIS PROJECT OR FOR OTHER PROJECTS, WITHOUT THE PRIOR WRITTEN AGREEMENT OF THE DP. ANY UNAUTHORIZED USE OF THE INSTRUMENTS OF SERVICE SHALL BE AT THE OWNER'S SOLE RISK AND WITHOUT LIABILITY TO THE DP AND THE DP'S CONSULTANTS.

IDENTIFICATION STAMP
DIV. OF THE STATE ARCHITECT
APP: 02-122821 INC: 2
REVIEWED FOR
SS ☑ FLS ☑ ACS ☑
DATE: 11/20/2025

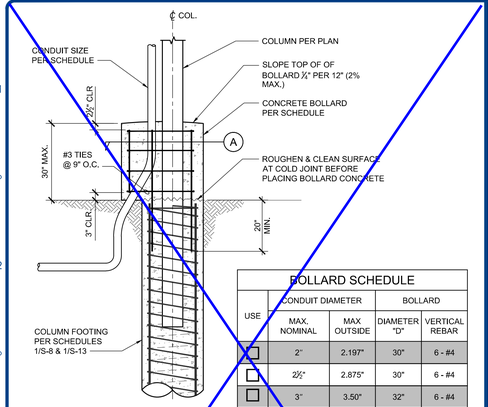

ELEVATION

BOLLARD SCHEDULE				
USE	CONDUIT DIAMETER		BOLLARD	
	MAX. NOMINAL	MAX OUTSIDE	DIAMETER "D"	VERTICAL REBAR
☐	2"	2.197"	30"	6 - #4
☐	2½"	2.875"	30"	6 - #4
☐	3"	3.50"	32"	6 - #4
☐	3½"	4.0"	32"	6 - #4
☐	4"	4.5"	32"	6 - #4

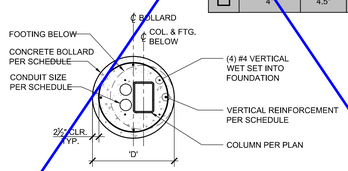

A SECTION

☐ OPTION UTILIZED

1 / - OPTIONAL BOLLARD DETAIL W/ SINGLE SIDED CONDUIT 1/2"=1'-0"

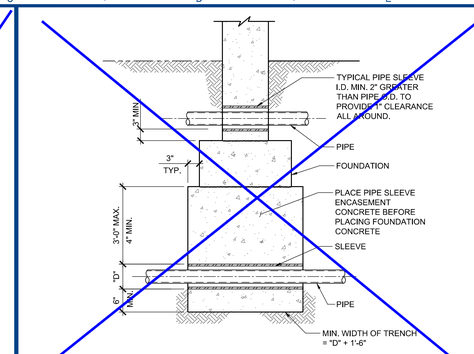

A PIPES PERPENDICULAR TO FOUNDATIONS

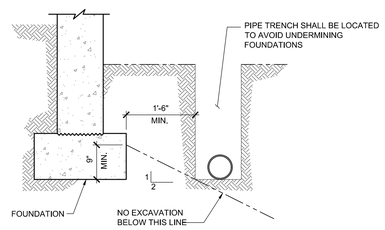

B PIPE TRENCH PARALLEL TO FOUNDATIONS

5 / - TYPICAL UTILITY PIPES AND TRENCHES AT FOUNDATIONS N.T.S.

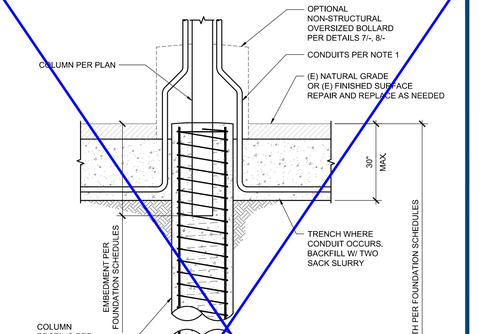

NOTES:
1. UNLIMITED NUMBER OF CONDUITS ALLOWED.

☐ OPTION UTILIZED

2 / - CONDUIT OUTSIDE FOOTING 1/2"=1'-0"

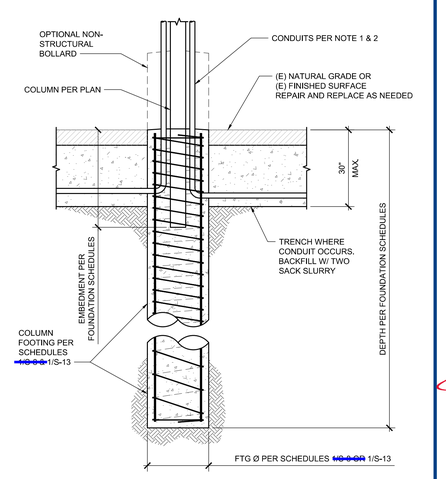

NOTES:
1. (2) 1" OR (1) 2" OR COMBINATION NOT TO EXCEED MAX 2" SIZE NOMINAL CONDUIT. CONDUITS MAY OCCUR ON ONE OR BOTH SIDES OF COLUMN.
2. CONTRACTOR TO SUBMIT CONDUIT LAYOUT TO ENGINEER FOR APPROVAL PRIOR TO INSTALLATION.

1 / - CONDUITS IN STANDARD FOOTING 1/2"=1'-0"

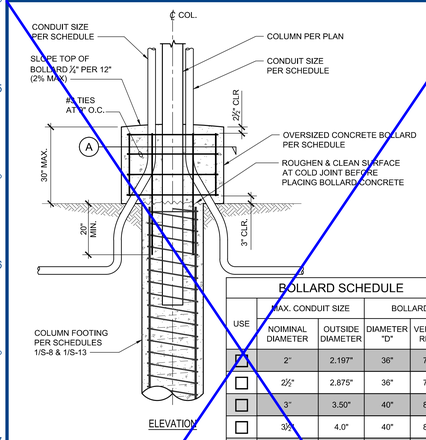

ELEVATION

BOLLARD SCHEDULE				
USE	MAX. CONDUIT SIZE		BOLLARD	
	NOMINAL DIAMETER	OUTSIDE DIAMETER	DIAMETER "D"	VERTICAL REBAR
☐	2"	2.197"	36"	7 - #4
☐	2½"	2.875"	36"	7 - #4
☐	3"	3.50"	40"	8 - #4
☐	3½"	4.0"	40"	8 - #4
☐	4"	4.5"	40"	8 - #4

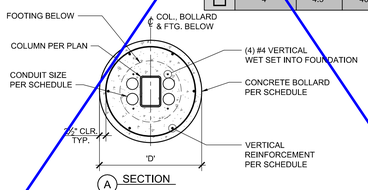

A SECTION

☐ OPTION UTILIZED

8 / - OPTIONAL BOLLARD DETAIL W/ DUAL SIDED CONDUIT 1/2"=1'-0"

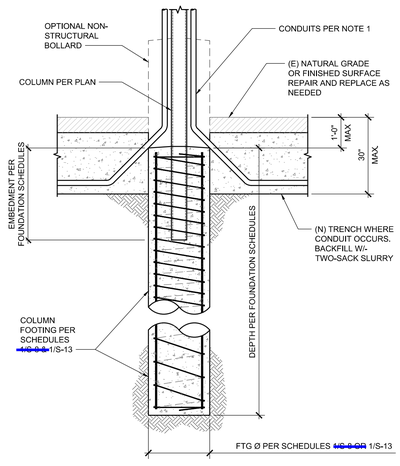

NOTES:
1. UNLIMITED NUMBER OF CONDUITS ALLOWED.

☒ OPTION UTILIZED

6 / - ALTERNATIVE DEEPENED FOOTING 1/2"=1'-0"

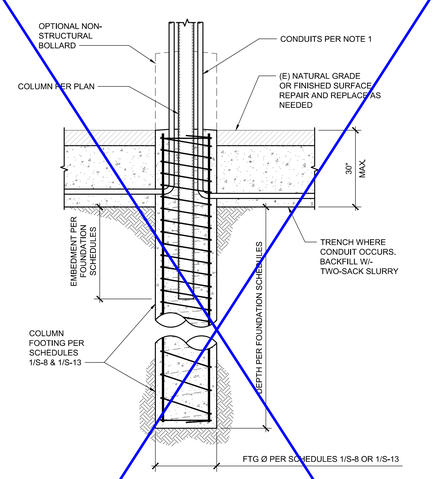

NOTES:
1. UNLIMITED NUMBER OF CONDUITS ALLOWED IN FOUNDATIONS.

☐ OPTION UTILIZED

2 / - DEEPENED FOOTING 1/2"=1'-0"

DRAWINGS, SPECIFICATIONS AND OTHER DOCUMENTS, PREPARED BY THE DESIGN PROFESSIONAL (DP) AND THE DP'S CONSULTANTS ARE INSTRUMENTS OF SERVICE FOR USE SOLELY WITH RESPECT TO THIS PROJECT. THIS INCLUDES DOCUMENTS IN ELECTRONIC FORM. THE DP AND THE DP'S CONSULTANTS SHALL BE DEEMED THE AUTHORS AND OWNERS OF THEIR RESPECTIVE INSTRUMENTS OF SERVICE AND SHALL RETAIN ALL COMMON LAW, STATUTORY AND OTHER RESERVED RIGHTS, INCLUDING COPYRIGHTS. THE INSTRUMENTS OF SERVICE SHALL NOT BE USED BY THE OWNER FOR FUTURE ADDITIONS OR ALTERATIONS TO THIS PROJECT OR FOR OTHER PROJECTS, WITHOUT THE PRIOR WRITTEN AGREEMENT OF THE DP. ANY UNAUTHORIZED USE OF THE INSTRUMENTS OF SERVICE SHALL BE AT THE OWNER'S SOLE RISK AND WITHOUT LIABILITY TO THE DP AND THE DP'S CONSULTANTS.

4 STEL ENGINEERING
26030 ACERO
MISSION VIEJO, CA 92691
949.305.1150 | FAX 949.305.1420

M BAR C CONSTRUCTION INC.
1778 LA COSTA MEADOWS DRIVE
SAN MARCOS, CA 92078
ERIK KRNOKOPICH
PHONE: (760) 744-4131
FAX: (760) 746-4457
ERIK@MBARCONLINE.COM
LIC # 847642
B, ASC-C21
(775) 787-8645

ENGINEER'S APPROVAL

REGISTERED PROFESSIONAL ENGINEER DUSTIN K. REBEYK S 5885 CIVIL STATE OF CALIFORNIA

BID INFORMATION
THE STRUCTURES AND DESIGNS IN THIS PC ARE PROPRIETARY TO M BAR C CONSTRUCTION, INC. AND 4 S.T.E.L. ENGINEERING, INC. ALL SITES USING THIS PC: M BAR C CONSTRUCTION, INC. SHALL BE THE STEEL CONTRACTOR & 4 S.T.E.L. ENGINEERING, INC. SHALL BE THE SEOR. SEE THE STANDARD NOTES FOR PC USE ON S-1 FOR ADDITIONAL REQUIREMENTS.

PRE-CHECK (PC) DOCUMENT
CODE: 2022 CBC
A SEPARATE PROJECT APPLICATION FOR CONSTRUCTION IS REQUIRED

APPROVED
DIV. OF THE STATE ARCHITECT
APP: 04-123080 PC
REVIEWED FOR
SS ☑ FLS ☑ ACS ☑ CG ☐
DATE: 11/25/2024

SITE SPECIFIC INFORMATION
VISALIA CAMPUS UNIV. CENTER
COLLEGE OF THE SEQUOIAS
915 S. MOONEY BLVD.
VISALIA, CA 93277

REVISIONS		
MARK	DATE	DESCRIPTION

UG 22.1.1

4 STEL JOB #	MC02-V3-1-1
DATE	11-18-24
DRAWN BY	GM
CHECKED	RWS

FOUNDATION MISC. DETAILS

S-21

NOTE: IF DWG. IS NOT 24 x 36, IT IS NOT FULL SIZE